Service and maintenance 9

9.1 Basic safety information

⚠ WARNING
Impermissible repair of the device • Repair must be carried out by Siemens authorized personnel only.

⚠ CAUTION
Releasing key lock Improper modification of parameters could influence process safety. • Make sure that only authorized personnel may cancel the key locking of devices for safety-related applications.

9.2 Cleaning

The radar device requires no cleaning under normal operating conditions.

Under severe operating conditions, the antenna may require periodic cleaning. If cleaning becomes necessary:

- Note the antenna material and the process medium, and select a cleaning solution that will not react adversely with either.
- Remove the device from service and wipe the antenna clean using a cloth and suitable cleaning solution.

NOTICE
Penetration of moisture into the device Device damage. • Make sure when carrying out cleaning and maintenance work that no moisture penetrates the inside of the device.

WARNING

Electrostatic charge

Danger of explosion in hazardous areas if electrostatic charges develop, for example, when cleaning plastic surfaces with a dry cloth.

- Prevent electrostatic charging in hazardous areas.

9.3 Maintenance and repair work

The device is maintenance-free. However, a periodic inspection according to pertinent directives and regulations must be carried out.

An inspection can include check of:

- Ambient conditions
- Seal integrity of the process connections, cable entries, and cover screws
- Reliability of power supply, lightning protection, and grounds

WARNING

Maintenance during continued operation in a hazardous area

There is a danger of explosion when carrying out repairs and maintenance on the device in a hazardous area.

- Isolate the device from power.

- or -

- Ensure that the atmosphere is explosion-free (hot work permit).

WARNING

Humid environment

Danger of electric shock.

- Avoid working on the device when it is energized.
- If working on an energized device is necessary, ensure that the environment is dry.
- Make sure when carrying out cleaning and maintenance work that no moisture penetrates the inside of the device.

9.3.1 Unit repair and excluded liability

All changes and repairs must be done by qualified personnel, and applicable safety regulations must be followed. Please note the following:

- The user is responsible for all changes and repairs made to the device.
- All new components must be provided by Siemens.
- Restrict repair to faulty components only.
- Do not re-use faulty components.

9.3.2 Part replacement

If the antenna, lens, secondary O-ring, and spring washers require replacement due to damage or failure, they may be replaced without the need for re-calibration if of the same type and size.

Replacing the antenna

Changing to a different antenna type may be performed by a Siemens authorized repair center or personnel.

If the electronics or enclosure require replacement due to damage or failure, please ensure the correct antenna version is used, otherwise a re-calibration will need to be performed by Siemens authorized personnel.

Replacing the lens

1. Remove existing lens by turning it counter-clockwise until it separates from the unit.
2. Replace the O-ring between the lens and process connection with a new one.
3. Carefully thread the replacement lens, and turn it clockwise until resistance is encountered. Do not over-tighten the lens, as this will permanently damage it.
4. For flange installation instructions, see Flanged versions (Page 35).

Note

After installation of the new lens onto the flanged encapsulated antenna version and before mounting on the vessel/tank, some lenses may not appear to lie flush on the device, but this is normal and will not impact performance.

Raised-Face flange kits

Description	Process connection size	Part number
Replacement TFM™ 1600 PTFE Lens and Spring Washer Kit for ASME B16.5 Class 150 raised faced	2"	A5E32462817
	3"	A5E32462819
	4"	A5E32462820
	6"	A5E32462821
Replacement TFM™ 1600 PTFE Lens and Spring Washer Kit for JIS B 2220 10K raised Face	50A	A5E32462822
	80A	A5E32462823
	100A	A5E32462824
	150A	A5E32462825
Replacement TFM™ 1600 PTFE Lens and Spring Washer Kit for EN 1092-1 PN10/16 type B1 raised face	DN50	A5E32462826
	DN80	A5E32462827
	DN100	A5E32462828
	DN150	A5E32462829

Spare part kits

Description	Process connection size	Part number
ISO2852, Hygienic encapsulated antenna Lens and silicon O-ring	2"	A5E32572731
	3"	A5E32572745
	4"	A5E32572747
DIN11851, Hygienic encapsulated antenna Lens and silicon O-ring	DN50	A5E32572758
	DN80	A5E32572770
	DN100	A5E32572772
DIN11864-1, Hygienic encapsulated antenna Lens and silicon O-ring	DN50	A5E32572773
	DN80	A5E32572779
	DN100	A5E32572782
DIN11864-2/3, Hygienic encapsulated antenna Lens and silicon O-ring	DN50	A5E32572785
	DN80	A5E32572790
	DN100	A5E32572791
Tuchenhagen, Hygienic encapsulated antenna Lens and silicon O-ring	Type F	A5E32572794
	Type N	A5E32572795

Note

For more information about accessories such as clamps, seals and process connections, please see the catalog on the product page (http://www.siemens.com/LR250).

9.4 Disposal

Note

Special disposal required

The device includes components that require special disposal.

- Dispose of the device properly and environmentally through a local waste disposal contractor.

Diagnosing and troubleshooting 10

10.1 Communication troubleshooting

1. Check the following:
   - There is power at the device.
   - The LCD shows the relevant data.
   - The device can be programmed using the handheld programmer.
   - If any fault codes are being displayed see General Fault Codes (Page 192) for a detailed list.
2. Verify that the wiring connections are correct.
3. See the table below for specific symptoms.

Symptom	Corrective action
The device cannot be programmed via the handheld programmer.	• Ensure **Write Protect (6.2.1.)** is set to the unlock value.
You try to set a SITRANS LR250 parameter via remote communications but the parameter remains unchanged.	• Ensure **Write Protect (6.2.1.)** is set to the unlock value, then try setting the parameter via the handheld programmer. • Ensure **Access Control (6.1.1.)** is set to Read/ Write. • Some parameters can be changed only when the device is not scanning. Try pressing Mode to put the device into PROGRAM mode.

If you continue to experience problems go to our website and check the FAQs for SITRANS LR250:

Product page (http://www.siemens.com/LR250), or contact your Siemens representative.

10.2 Device status icons

Icon	Priority Level	Meaning
	1	• Maintenance alarm • Measurement values are not valid
	2	• Maintenance warning: maintenance demanded immediately • Measured signal still valid
	3	• Maintenance required • Measured signal still valid
	1	• Process value has reached an alarm limit
	2	• Process value has reached a warning limit
	3	• Process value has reached a tolerance limit
	1	• Configuration error • Device will not work because one or more parameters/components is incorrectly configured
	2	• Configuration warning • Device can work but one or more parameters/components is incorrectly configured
	3	• Configuration changed • Device parameterization not consistent with parameterization in project. Look for info text.
	1	• Manual operation (local override) • Communication is good; device is in manual mode.
	2	• Simulation or substitute value • Communication is good; device is in simulation mode or works with substitute values.
	3	• Out of operation • Communication is good; device is out of action.
		• Data exchanged
		• No data exchange

Icon	Priority Level	Meaning
		• Write access enabled
		• Write access disabled

10.3 General fault codes

Note

- If more than one fault is present, the device status indicator and text for each fault alternate at 2 second intervals.
- Some faults cause the device to go to Fail-safe mode (Fault 52). These are indicated with an asterisk (*).

Code/ Icon		Meaning	Corrective Action
S: 0	*	The device was unable to get a measurement within the Fail-safe LOE Timer period. Possible causes: faulty installation, antenna material buildup, foaming/other adverse process conditions, invalid configuration range.	• Ensure installation details are correct. • Ensure no antenna material buildup. Clean if necessary. • Adjust process conditions to minimize foam or other adverse conditions. • Correct configuration range. • If fault persists, contact your local Siemens representative.
S: 2	*	Unable to collect profile because of a power condition that is outside the operating range of the device.	Repair required: contact your local Siemens representative.
S: 3		Device is nearing its lifetime limit according to the value set in Maintenance Required Limit.	Replacement is recommended
S: 4		Device is nearing its lifetime limit according to the value set in Maintenance Demanded Limit.	Replacement is recommended.
S: 6		Sensor is nearing its lifetime limit according to the value set in Maintenance Required Limit.	Replacement is recommended.
S: 7		Sensor is nearing its lifetime limit according to the value set in Maintenance Demanded Limit.	Replacement is recommended.
S: 8		Service interval as defined in Maintenance Required Limit has expired.	Perform service.

Code/ Icon		Meaning	Corrective Action
S: 9		Service interval as defined in Maintenance Demanded Limit has expired.	Perform service.
S: 11		Internal temperature sensor failure.	Repair required: contact your local Siemens representative.
S: 12		Internal temperature of device has exceeded specifications: it is operating outside its temperature range.	• Relocate device and/or lower process temperature enough to cool device. • Inspect for heat-related damage and contact your local Siemens representative if repair is required. • Fault code will persist until a manual reset is performed using SIMATIC PDM or the LCD interface.
S: 17		Calibration interval as defined in Maintenance Required Limit has expired.	Perform calibration.
S: 18		Calibration interval as defined in Maintenance Demanded Limit has expired.	Perform calibration.
S: 28	*	Internal device failure caused by a RAM memory error.	Repair required: contact your local Siemens representative.
S: 29	*	EEPROM damaged.	Repair required: contact your local Siemens representative
S: 31	*	Flash error.	Repair required: contact your local Siemens representative
S: 33	*	Factory calibration for the internal temperature sensor has been lost.	Repair required: contact your local Siemens representative
S: 34	*	Factory calibration for the device has been lost.	Repair required: contact your local Siemens representative
S: 35	*	Factory calibration for the device has been lost.	Repair required: contact your local Siemens representative

Code/ Icon		Meaning	Corrective Action
S: 36	*	Unable to start microwave module.	Repair required: contact your local Siemens representative
S: 37	*	Measurement hardware problem.	Repair required: contact your local Siemens representative
S: 38	*	Failure in the device electronics.	Repair required: contact your local Siemens representative
S: 43	*	Factory calibration for the radar receiver has been lost.	Repair required: contact your local Siemens representative.
S: 45	*	No valid boot program detected: firmware corrupt	Repair required: contact your local Siemens representative.
S: 48	*	User configuration is invalid. One or more of parameters: Low Calibration Point, High Calibration Point, Volume breakpoints, and/or Auto False-Echo Suppression, are set to invalid values.	• Reconfigure the unit. • Ensure the difference between High Calibration Point and Low Calibration Point is not less than or equal to zero; do a Master Reset.
S: 49	*	EEPROM corrupt.	Repair required: contact your local Siemens representative.
S: 50	*	EEPROM corrupt.	Repair required: contact your local Siemens representative.
S: 51	*	EEPROM corrupt.	Repair required: contact your local Siemens representative.

Code/ Icon		Meaning	Corrective Action
S: 52		Fail-safe is activated. Possible causes: 1. hardware failure 2. memory failure 3. Fail-safe LOE timer expired– possible causes: faulty installation, antenna material buildup, foaming/other adverse process conditions, invalid calibration range.	For 3: • Correct configuration; ensure installation is correct; • no antenna buildup; • adjust process conditions to minimize foaming/other adverse conditions; • correct calibration range. If fault persists, or for 1 and 2, contact your local Siemens representative.
S: 53	*	Configuration lost: one or more parameter settings have been lost. This may occur after a firmware upgrade causes user parameters to be reset.	Restore user parameters using SIMATIC PDM.

10.4 Operation troubleshooting

Operating symptoms, probable causes, and resolutions.

Symptom	Cause	Action
Display shows S: 0 LOE	level or target is out of range	• check specifications • check **Low Calibration Pt. (2.3.1.)** • increase **Confidence (2.8.6.1.)**
Display shows S: 0 LOE	material build-up on antenna	• clean the antenna • re-locate SITRANS LR250
Display shows S: 0 LOE	location or aiming: • poor installation • flange not level • Auto False Echo Suppression may be incorrectly applied	• check to ensure nozzle is vertical • ensure end of antenna protrudes from end of nozzle • review Auto False Echo Suppression (Page 259). • ensure Auto False Echo Suppression Range is set correctly
Display shows S: 0 LOE	antenna malfunction: • temperature too high • physical damage • excessive foam • multiple echoes	• check **Current Internal Temperature (3.2.1.)** • use foam deflector or stillpipe • relocate • use a defoamer • set **Algorithm (2.8.4.1.)** to **F** (First echo)
Reading does not change, but the level does	SITRANS LR250 processing wrong echo, for example, vessel wall, or structural member	• re-locate SITRANS LR250 • check nozzle for internal burrs or welds • rotate device 90° • use **Auto False Echo Suppression (2.8.7.1.)** • if necessary: see Auto False Echo Suppression (Page 259).
Measurement is consistently off by a constant amount	• setting for **Low Calibration Pt. (2.3.1.)** not correct • setting for **Sensor Offset (2.3.3.)** not correct	• check distance from sensor reference point to **Low Calibration Pt. (2.3.1.)** • check **Sensor Offset (2.3.3.)**
Screen blank	power error	• check nameplate rating against voltage supply • check power wiring or source
	too much load resistance	• change barrier type, or • remove something from the loop, or • increase supply voltage • reduce wire distance or use larger gage wire

Symptom	Cause	Action
Reading erratic	echo confidence weak	• refer to **Confidence (2.8.6.1.)** • use **Auto False Echo Suppression (2.8.7.1.)** and **Auto False Echo Suppression Range (2.8.7.2.)** • use foam deflector or stillpipe
	liquid surface vortexed	• decrease **Fill Rate per Minute (2.4.2.)** • relocate device to side pipe • increase confidence threshold in **Echo Threshold (2.8.4.3.)**
	material filling	• Re-locate SITRANS LR250
Reading response slow	**Fill Rate per Minute (2.4.2.)** setting incorrect	• increase measurement response if possible
Reads correctly but occasionally reads high when vessel is not full	• detecting close range echo • build up near top of vessel or nozzle • nozzle problem	• clean the antenna • use **Auto False Echo Suppression (2.8.7.1.)** and **Auto False Echo Suppression Range (2.8.7.2.)**
Level reading lower than actual material level	• material is within Near Range zone • multiple echoes processed	• decrease **Near Range (2.8.1.)** (minimum value depends on antenna type) • raise SITRANS LR250 • ensure **Algorithm (2.8.4.1.)** is set to F (First echo)
	• vessel near empty and low dK material	• ensure **Material (2.2.3.)** selection is LIQUID LOW DK • set **Position Detect (2.8.4.2.)** to Hybrid • set **CLEF Range (2.8.4.4.)** to 0.5 m

Technical data

11

Note

- Siemens makes every attempt to ensure the accuracy of these specifications but reserves the right to change them at any time.

11.1 Power

⚠	General Purpose Intrinsically Safe Non-Sparking Non-incendive (FM/CSA US/Canada only)	Nominal 24 V DC at 550 Ohm
⚠	Flameproof Increased Safety Explosion-proof (FM/CSA US/Canada only)	Nominal 24 V DC at 250 Ohm

- Maximum 30 V DC
- 4 to 20 mA
- Max. startup current see Startup Behaviour (Page 283).

11.2 Performance

Reference operating conditions according to IEC 60770-1

Ambient temperature	15 to 25 °C (59 to 77 °F)
Humidity	45 to 75% relative humidity
Ambient pressure	860 to 1060 mbar a (86000 to 106000 N/m^2 a)
Interference reflections	minimum 20 dB lower than the main target reflections

Measurement Accuracy (measured in accordance with IEC 60770-1)

Maximum measured error	= 3 mm (0.12")[1) 2) 3)] including hysteresis and non-repeatability
Frequency	K-band

Maximum measurement range[4]	1.5" antenna	10 m (32.8 ft)[5]
	2" threaded PVDF antenna	
	2"/DN50/50A Flanged encapsulated antenna (FEA)	
	2" ISO 2852, DN50 DIN 11864-1/2/3, DN50 DIN11851, Tuchenhagen Types F and N Hygienic encapsulated antenna (HEA)	
	all other versions	20 m (65.6 ft)
Minimum detectable distance	50 mm (2") from end of antenna[6]	
Update time[7]	minimum 1 second, depending on settings for **Response Rate (2.4.1.)** and **LCD Fast Mode (4.9.)**	
Influence of ambient temperature	< 0.003%/K (average over full temperature range, referenced to maximum range)	
Dielectric constant of material measured	dK > 1.6 [antenna and application dependent[8]]	
Memory	non-volatile EEPROM	
	no battery required	

[1] The statistical accuracy is typically 3 mm (0.12") 90% of the time, when tested in accordance with IEC 60770-1.

[2] Under severe EMI/EMC environments per IEC 61326-1 or NAMUR NE21, the device error may increase to a maximum of 10 mm (0.4").

[3] For 2" threaded PVDF, Flanged encapsulated antennas and Hygienic encapsulated antennas, the maximum measured error <500 mm from the sensor reference point =25 mm (1").

[4] From sensor reference point: see Dimensions (Page 209).

[5] 20 m (65.6 ft) possible in a stillpipe/bypass

[6] Minimum range is antenna length + 50 mm (2"). See Dimension drawings (Page 209).

[7] Reference conditions: **Response Rate (2.4.1.)** set to **FAST, LCD Fast Mode (4.9.)** set to **ON**.

[8] For 1.5" (40 mm) antenna, 2" (50 mm) threaded PVDF antenna, 2"/DN50/50A flanged encapsulated antenna, and 2" ISO 2852, DN50 DIN 11864-1/2/3, DN50 DIN11851, Tuchenhagen Types F and N hygienic encapsulated antenna the dK is limited to 3 unless a stillpipe is used.

See Flanged horn antenna (Page 214).

See Flanged encapsulated antenna (3"/DN80/80A sizes and larger) (Page 220).

See Hygienic encapsulated antenna (2" ISO 2852 sanitary clamp) (Page 222).

11.3 Interface

Analog output	Signal range	4 to 20 mA (± 0.02 mA accuracy) upper limit 20 to 23 mA adjustable
	Fail signal	3.6 mA to 23 mA [For more details, see Fail-safe Mode] (Page 265)
Communication: HART[1)]	Load	230 to 600 Ω, 230 to 500 Ω when connecting a coupling module
	Max. line length	multi-wire: ≤ 1500 m (4921 ft)
	Protocol	HART, Version 5.1
Configuration	Remote	Siemens SIMATIC PDM or AMS Device Manager (PC)
	Local	Siemens infrared handheld programmer, or HART handheld communicator
	Display (local)[2)]	graphic LCD, with bar graph representing level

1) See A.6.3 for details on version exclusions

2) Display quality will be degraded in temperatures below –25 °C (–13 °F) and above +65 °C (+149 °F).

Curve 2 (Flameproof, Increased Safety, Explosion-proof) (Page 283)

11.4 Mechanical

Process connection:	Threaded connection	1.5" NPT (ASME B1.20.1), R (BSPT, EN 10226-1) [a] or G (BSPP, EN ISO 228-1) or 2" NPT (ASME B1.20.1), R (BSPT, EN 10226-1) or G (BSPP, EN ISO 228-1) or 3" NPT (ASME B1.20.1), R (BSPT, EN 10226-1) or G (BSPP, EN ISO 228-1)	
	Flange connection (flat-face) Materials	2, 3, 4" (ASME 150 lb, 300 lb) DN50, DN80, DN100 (PN10/16, PN25/40) 50A, 80A, 100A (JIS 10K) 316L /1.4404 or 316L /1.4435 stainless steel	
	Flange connection (raised face) Materials	DN50, DN80, DN100, DN150 (PN10/16, PN25/40) 1.4404 or 1.4435 stainless steel, optional Alloy N06022/2.4602 (Hastelloy®C-22 or equivalent)	
	Flanged encapsulated antenna (FEA) connection (raised face) Materials	2, 3, 4, 6" (ASME 150 lb); DN50, DN80, DN100, DN150 (PN10/16); 50A, 80A, 100A, 150A (JIS 10K) 316L /1.4404 or 316L /1.4435 stainless steel	
	Hygienic encapsulated antenna (HEA) connection Materials	ISO 2852 (2, 3, 4") DIN 11851 (DN50, DN80, DN100) DIN 11864-1/2/3 (DN50, DN80, DN100) Tuchenhagen (Type F [50 mm] and Type N [68 mm]) 316L /1.4404 or 316L /1.4435 stainless steel	
		ISO 2852 (2, 3, 4") DIN 11864-3 (DN50, DN80, DN100)	clamp: 304/1.4301 stainless steel
		Tuchenhagen (Type F [50 mm] and Type N [68 mm]) 316L /1.4404 or 316L /1.4435 stainless steel	clamp: 304/1.4301 stainless steel nut connection: 303/1.4305 stainless steel
		DIN 11851/11864-1 (DN50, DN80, DN100)	captive slotted nut connection: 304L/1.4307
		DIN 11864-2 (DN50, DN80, DN100)	mounting nuts and bolts: 304/1.4301 stainless steel

Antenna:	Horn Materials	standard 1.5" (40 mm), 2" (50 mm), 3" (80 mm), and 4" (100 mm) horn, optional 100 mm (4") horn extension 316L stainless steel with PTFE emitter optional Alloy N06022/2.4602 (Hastelloy®C-22 or equivalent) with PTFE emitter
	Threaded PVDF antenna Wetted materials	2" (50 mm) PVDF (Polyvinylidene fluoride)
	Flanged encapsulated antenna Wetted materials	316L /1.4404 or 316L /1.4435 stainless steel TFM™ 1600 PTFE lens
	Hygienic encapsulated antenna Wetted material	316L/1.4404 or 316L/1.4435 stainless steel TFM™ 1600 PTFE (plus chosen seal)
Enclosure	Construction	aluminum, polyester powder-coated
	Conduit entry	2 x M20x1.5, or 2 x ½" NPT
	Ingress protection	Type 4X/NEMA 4X, Type 6/NEMA 6, IP67, IP68
Weight (excluding extensions):	1.5" threaded connection with 1.5" horn antenna	approximately 5.1kg (11.2 lb)
	2" threaded connection with 2" horn antenna	approximately 5.5 kg (12.1 lb)
	3" threaded connection with 3" horn antenna	approximately 7.0 kg (15.4 lb)
	2" threaded PVDF antenna	approximately 3.3 kg (7.3 lb)
	DN50 PN10/16 or 2" 150 lb flat-face flange with 2" horn antenna	approximately 8 kg (17.6 lb)
	DN100 PN25/40 or 4" ASME 300 lb flat-face flange with 4" horn antenna	approximately 17.4 kg (38.3 lb)
	DN50 PN10/16 raised-face flange with 2" horn antenna	approximately 6 kg (13.2 lb)
	DN100 PN25/40 raised-face flange with 4" horn antenna	approximately 11.3 kg (24.9 lb)
	2" ASME 150 lb FEA	approximately 7.0 kg (15.4 lb)
	3" ASME 150 lb FEA	approximately 10.7 kg (23.6 lb)
	4" ASME 150 lb FEA	approximately 13.1 kg (28.9 lb)
	6" ASME 150 lb FEA	approximately 17.7 kg (39 lb)
	DN50 PN10/16 FEA	approximately 7.1 kg (15.7 lb)
	DN80 PN10/16 FEA	approximately 10.1 kg (22.3 lb)
	DN100 PN10/16 FEA	approximately 11.1 kg (24.5 lb)
	DN150 PN10/16 FEA	approximately 15.9 kg (35.1 lb)
	50 A JIS 10K FEA	approximately 6.5 kg (14.3 lb)

	80 A JIS 10K FEA	approximately 9 kg (19.8 lb)
	100 A JIS 10K FEA	approximately 10.1 kg (22.3 lb)
	150 A JIS 10K	approximately 16.3 kg (35.9 lb)
	2" ISO2852 HEA	approximately 4.7 kg (10.4 lb)
	3" ISO2852 HEA	approximately 6.3 kg (13.9 lb)
	4" ISO2852 HEA	approximately 6.8 kg (15 lb)
	DN50 DIN 11864-1 HEA	approximately 4.8 kg (10.6 lb)
	DN80 DIN 11864-1 HEA	approximately 6.7 kg (14.8 lb)
	DN100 DIN 11864-1 HEA	approximately 7.1 kg (15.7 lb)
	DN50 DIN 11864-2 HEA	approximately 5.0 kg (11 lb)
	DN80 DIN 11864-2 HEA	approximately 7.2 kg (15.9 lb)
	DN100 DIN 11864-2 HEA	approximately 7.9 kg (17.4 lb)
	DN50 DIN 11864-3 HEA	approximately 4.8 kg (10.6 lb)
	DN80 DIN 11864-3 HEA	approximately 6.6 kg (14.6 lb)
	DN100 DIN 11864-3 HEA	approximately 7.2 kg (15.9 lb)
	DN50 DIN 11851 HEA	approximately 4.8 kg (10.6 lb)
	DN80 DIN 11851 HEA	approximately 6.8 kg (15 lb)
	DN100 DIN 11851 HEA	approximately 7.2 kg (15.9 lb)
	Tuchenhagen Type F HEA	approximately 4.8 kg (10.6 lb)
	Tuchenhagen Type N HEA	approximately 4.9 kg (10.8 lb)

[a] For use with 1.5" (40 mm) horn antennas only.

11.5 Environmental

Note

- For the specific configuration you are about to use or install, check transmitter nameplate and see Approvals (Page 206).
- Use appropriate conduit seals to maintain IP or NEMA rating.

Location	indoor/ outdoor
Altitude	5000 m (16,404 ft) max.
Ambient temperature	−40 to +80 °C (−40 to +176 °F)
Relative humidity	suitable for outdoor Type 4X/NEMA 4X, Type 6/NEMA 6, IP67, IP68 enclosure (see note above)
Installation category	I
Pollution degree	4

11.6 Process

Note

The maximum temperature is dependent on the process connection, antenna materials, and vessel pressure. For more detailed information see Maximum Process Temperature Chart (Page 265) and Process Pressure/Temperature derating curves (Page 267).

Temperature at process connection	Standard Horn antenna (Threaded or Flanged):	with FKM O-ring	−40 to +200 °C (−40 to +392 °F)
		with FFKM O-ring	−20 to +200 °C (−4 to +392 °F)
	2" NPT / BSPT / G Threaded PVDF antenna:		−40 to +80 °C (−40 to +176 °F)
	Flanged encapsulated antenna (FEA)		-40 to +170 °C (−40 to +338 °F)
	Hygienic encapsulated antenna (HEA)		-40 to +170 °C (−40 to +338 °F)
			with FKM seals used on process connection: -20 to +170 °C (-4 to +338 °F)
			with EPDM seals used on process connection: -40 to +120 °C (-40 to +248 °F)
Pressure (vessel)			Refer to process connection tag and Process Pressure/Temperature derating curves (Page 270).

11.7 Approvals

Note

The device nameplate lists the approvals that apply to your device.

Application type	LR250 version	Approval rating	Valid for:
Non-hazardous	General purpose	$CSA_{US/C}$, FM, CE, RCM	N. America, Europe
	Radio	Europe (R&TTE), FCC, Industry Canada	
Hazardous	Intrinsically safe (Page 45)	ATEX II 1G, Ex ia IIC T4 Ga ATEX II 1D, Ex ia ta IIIC T100 °C Da	Europe
		IECEx SIR 05.0031X, Ex ia IIC T4 Ga Ex ia ta IIIC T100 °C Da	International
		FM/CSA Class I, Div. 1, Groups A, B, C, D Class II, Div. 1, Groups E, F, G Class III T4	US/Canada
		INMETRO: DNV 12.0087 X Ex ia IIC T4 Ga Ex ia ta IIIC T100 °C Da IP65/IP67 -40 °C ≤ Ta ≤ +80 °C DNV #OCP 0017 ABNT NBR IEC 60079-0:2008, ABNT NBR IEC 60079-11:2009, ABNT NBR IEC 60079-26:2008, ABNT NBR IEC 60079-31:2011	Brazil
		NEPSI Ex ia IIC T4 Ga Ex iaD 20 T90 IP67 DIP A20 T_A 90 ºC	China
	Non-Sparking (Page 47)	ATEX II 3 G, Ex nA IIC T4 Gc	Europe
		NEPSI Ex nA IIC T4 Gc	China
	Non-incendive (Page 47)	FM/CSA Class I, Div. 2, Groups A, B, C, D T5	US/Canada
	Flameproof (Page 48)	ATEX II 1/2 GD, 1D, 2D IECEx SIR 08.0107X Ex d mb ia IIC T4 Ga/Gb Ex ia ta IIIC T100 °C Da	Europe and International

Application type	LR250 version	Approval rating	Valid for:
		INMETRO: DNV 12.0088 X Ex d ia mb IIC T4 Ga/Gb Ex ia ta IIIC T100 °C Da IP67 -40 °C ≤ Ta ≤ +80 °C U_m = 250 V DNV #OCP 0017 ABNT NBR IEC 60079-0:2008, ABNT NBR IEC 60079-1:2009, ABNT NBR IEC 60079-11:2009, ABNT NBR IEC 60079-18:2010, ABNT NBR IEC 60079-26:2008, ABNT NBR IEC 60079-31:2011	Brazil
	Increased safety (Page 49)	ATEX II 1/2 GD, 1D, 2D IECEx SIR 08.0107X Ex e mb ia IIC T4 Ga/Gb Ex ia ta IIIC T100 °C Da	Europe and International
		INMETRO: DNV 12.0088 X Ex e ia mb IIC T4 Ga/Gb Ex ia ta IIIC T100 °C Da IP67 -40 °C ≤ Ta ≤ +80 °C U_m = 250 V DNV #OCP 0017 ABNT NBR IEC 60079-0:2008, ABNT NBR IEC 60079-7:2008, ABNT NBR IEC 60079-11:2009, ABNT NBR IEC 60079-18:2010, ABNT NBR IEC 60079-26:2008, ABNT NBR IEC 60079-31:2011	Brazil
	Flameproof (Page 48)/ Increased safety (Page 49)	NEPSI Ex d ia mb IIC T4 Ga/Gb / Ex e ia mb IIC T4 Ga/Gb Ex iaD 20 T90 IP67 DIP A20 T_A 90 ºC	China
	Explosion proof (Page 49)	FM/CSA Class I, Div. 1, Groups A, B, C, D Class II, Div. 1, Groups E, F, G Class III T4	US/Canada
	Marine	Lloyd's Register of Shipping ABS Type Approval BV Type Approval	

11.8 Programmer (infrared keypad)

Note

Battery is non-replaceable with a lifetime expectancy of 10 years in normal use.
To estimate the lifetime expectancy, check the nameplate on the back for the serial number. The first six numbers show the production date (mmddyy), for example, serial number 032608101V was produced on March 26, 2008.

Siemens Milltronics Infrared IS (Intrinsically Safe) Handheld Programmer for hazardous and all other locations (battery is non-replaceable).

Approvals	CE FM/CSA Class I, II, III, Div. 1, Gr. A to G T6 ATEX II 1GD Ex ia IIC T4 Ga Ex iaD 20 T135 °C IECEx Ex ia IIC T4 Ga Ex iaD 20 T135 °C INMETRO Ex ia IIC T4 Ga Ex ia IIIC T135 °C Da
Ambient temperature	−20 to +50 °C (−5 to +122 °F)
Interface	proprietary infrared pulse signal
Power	3 V non-replaceable lithium battery
Weight	150 g (0.3 lb)
Color	black
Part number	7ML1930-1BK

Dimension drawings

12

12.1 Threaded horn antenna

Note

- Process temperature and pressure capabilities are dependent upon information on the process connection tag. Reference drawing listed on the tag is available for download from our website under **Support/Installation drawings/Level Measurement/Continuous - Radar/LR250**:
  Product page (http://www.siemens.com/LR250)
- Process connection drawings are also available for download from the **Installation Drawings page**.
- Signal amplitude increases with horn diameter, so use the largest practical size.
- Optional extensions can be installed below the threads.

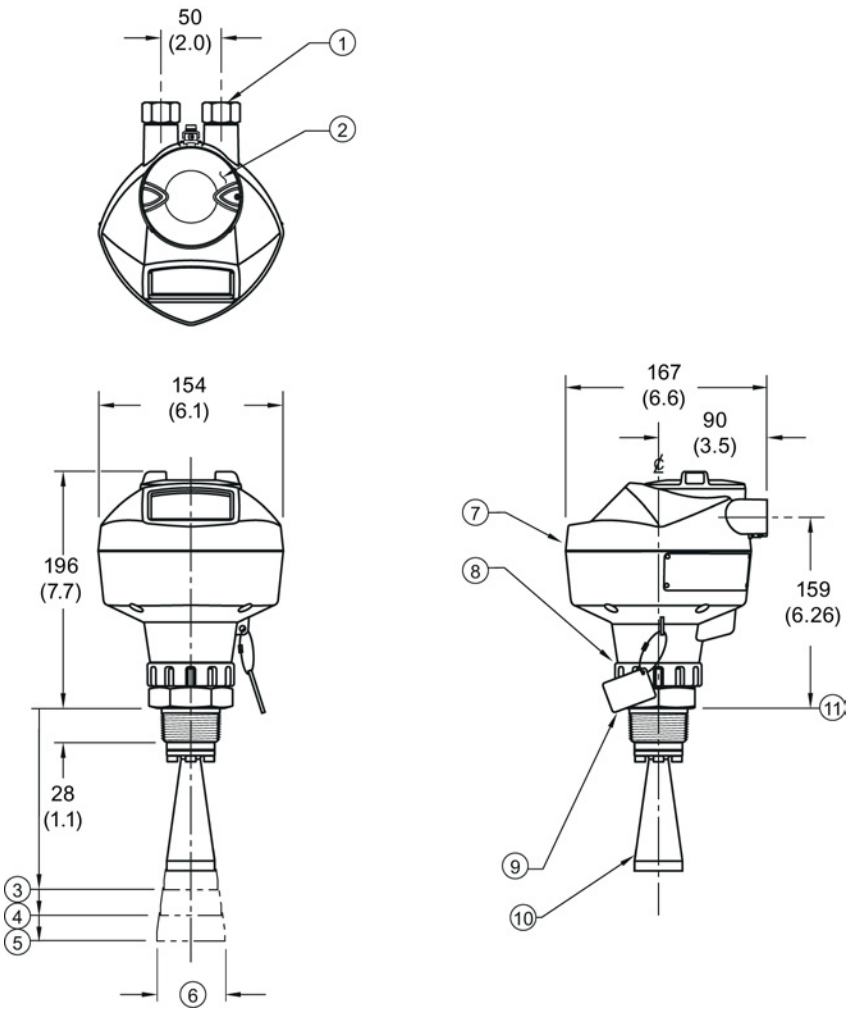

①	½" NPT cable entry, or M20 cable gland	⑦	enclosure/electronics
②	threaded cover	⑧	retaining collar
③	2" horn	⑨	process connection tag
④	3" horn	⑩	horn
⑤	4" horn	⑪	sensor reference point
⑥	horn O.D.		

Dimensions in mm (inch)

Threaded horn dimensions

Antenna Type	Antenna O.D. in mm (inch)	Height to sensor reference point, in mm (inch) [a]			Beam Angle (°)[b]	Measurement range, in m (ft)
		1-1/2" threaded connection	2" threaded connection	3" threaded connection		
1.5"	39.8 (1.57)	135 (5.3)	N/A	N/A	19	10 (32.8)
2"	47.8 (1.88)	N/A	166 (6.55)	180 (7.09)	15	20 (65.6)
3"	74.8 (2.94)	N/A	199 (7.85)	213 (8.39)	10	20 (65.6)
4"	94.8 (3.73)	N/A	254 (10)	268 (10.55)	8	20 (65.6)

[a] Height from bottom of horn to sensor reference point as shown: see dimension drawing.

[b] -3dB in the direction of the polarization axis. For an illustration, see Polarization reference point (Page 31).

12.2 Threaded horn antenna with extension

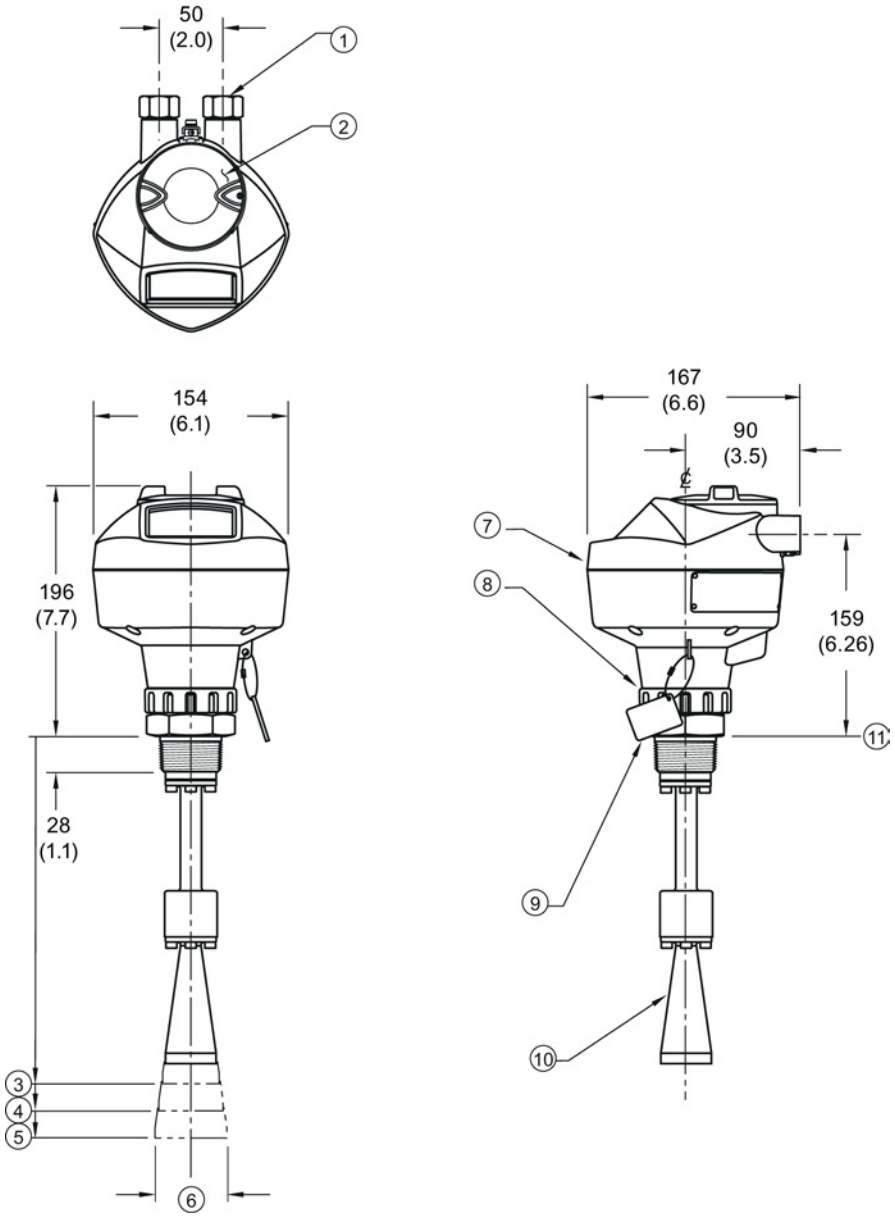

①	½" NPT cable entry, or M20 cable gland	⑦	enclosure/electronics
②	threaded cover	⑧	retaining collar
③	2" horn	⑨	process connection tag
④	3" horn	⑩	horn
⑤	4" horn	⑪	sensor reference point
⑥	horn O.D.		

Dimensions in mm (inch)

Threaded horn with extension dimensions

Antenna Type	Antenna O.D. in mm (inch)	Height to sensor reference point, in mm (inch) [a]			Beam Angle (°) [b]	Measurement range in m (ft)
		1-1/2" threaded connection	2" threaded connection	3" threaded connection		
1.5"	39.8 (1.57)	235 (9.25)	N/A	N/A	19	10 (32.8)
2"	47.8 (1.88)	N/A	266 (10.47)	280 (11.02)	15	20 (65.6)
3"	74.8 (2.94)	N/A	299 (11.77)	313 (12.32)	10	20 (65.6)
4"	94.8 (3.73)	N/A	354 (13.94)	368 (14.49)	8	20 (65.6)

[a] Height from bottom of horn to sensor reference point as shown: see dimension drawing.

[b] -3dB in the direction of the polarization axis. For an illustration, see Polarization reference point (Page 31).

12.3 Flanged horn antenna

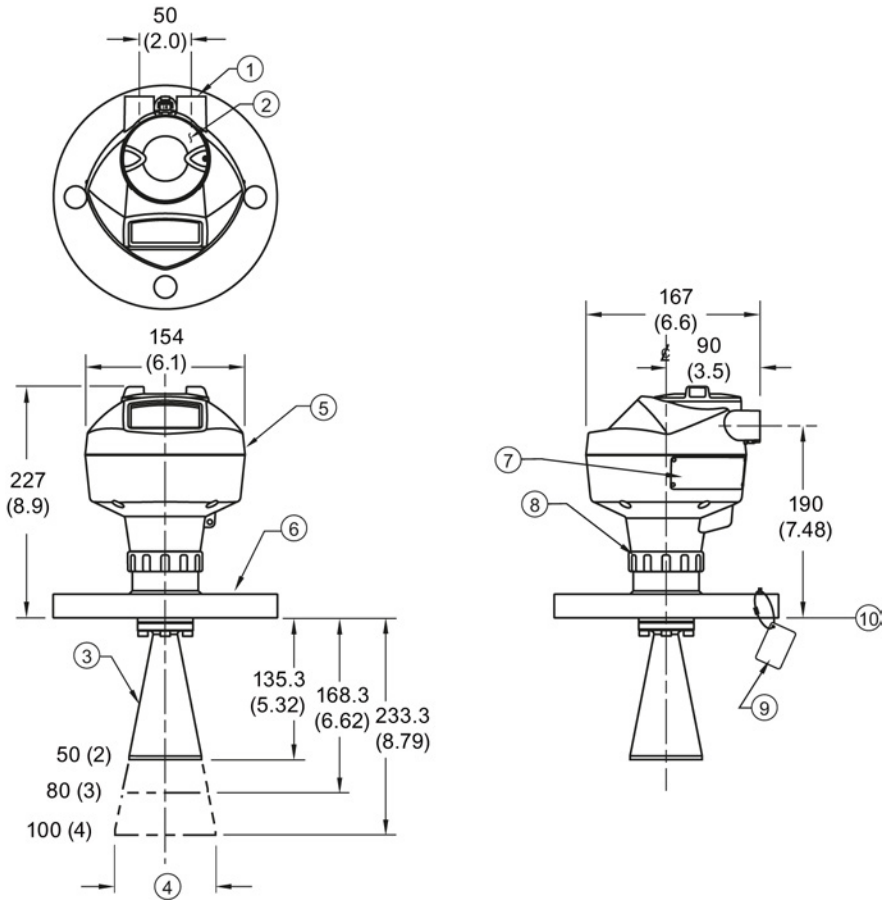

①	½" NPT cable entry, or M20 cable gland	⑥	flange
②	threaded cover	⑦	name-plate
③	horn	⑧	retaining collar
④	horn O.D.	⑨	process connection tag
⑤	enclosure/electronics	⑩	sensor reference point

Dimensions in mm (inch)

Flanged Horn dimensions

Nominal horn size in mm (inch)	Horn O.D. in mm (inch)	Height to sensor reference point, in mm (inch)[a]		Beam angle (°)[b]	Measurement range, in m (ft)
		Stainless steel flange: raised or flat-face	Optional alloy flange [c]		
50 (2)	47.8 (1.88)	135.3 (5.32)	138.3 (5.44)	15	20 (65.6)
80 (3)	74.8 (2.94)	168.3 (6.62)	171.3 (6. 74)	10	
100 (4)	94.8 (3.73)	223.3 (8.79)	226.3 (8.90)	8	

[a] Height from bottom of horn to sensor reference point as shown: see Flanged horn antenna with extension (Page 216). See also Raised-Face flange per EN 1092-1 for flanged horn antenna (Page 241), or Flat-Face flange (Page 246).

[b] -3dB in the direction of the polarization axis (see Polarization reference point (Page 31) for an illustration).

[c] Optional alloy N06022/2.4602 (Hastelloy® C-22 or equivalent). See Raised-Face Flange Dimensions (Page 241).

Note

Heights to sensor reference point are for stainless steel flanges. For optional alloy N06022/2.4602 (Hastelloy© C-22 or equivalent) see Flanged Horn dimensions above.

12.4 Flanged horn antenna with extension

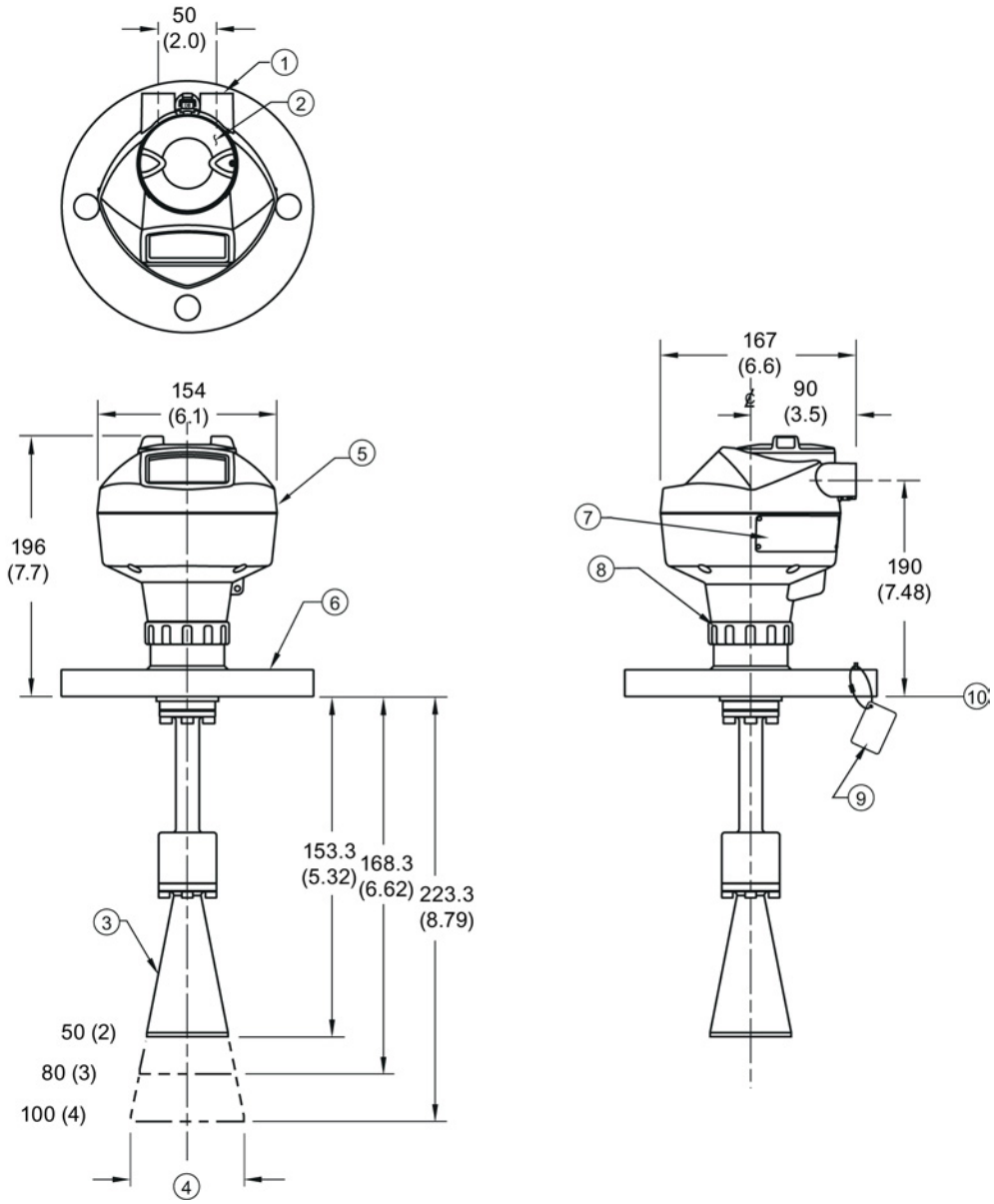

①	½" NPT cable entry, or M20 cable gland	⑥	flange
②	threaded cover	⑦	name-plate
③	horn	⑧	retaining collar
④	horn O.D.	⑨	process connection tag
⑤	enclosure/electronics	⑩	sensor reference point

Dimensions in mm (inch)

Flanged horn with extension dimensions

Nominal horn size in mm (inch)	Horn O.D. in mm (inch)	Height to sensor reference point, in mm (inch) [a]		Beam angle (°)[b]	Measurement range, in m (ft)
		Stainless steel flange: raised or flat-face	Optional alloy flange [c]		
50 (2)	47.8 (1.88)	235.3 (9.26)	238.3 (9.38)	15	20 (65.6)
80 (3)	74.8 (2.94)	268.3 (10.56)	271.3 (10.68)	10	
100 (4)	94.8 (3.73)	323.3 (12.73)	326.3 (12.85)	8	

[a] Height from bottom of horn to sensor reference point as shown: See also Raised-Face flange per EN 1092-1 for flanged horn antenna (Page 241) or Flat-Face Flange. (Page 246)

[b] -3dB in the direction of the polarization axis (see Polarization reference point (Page 31) for an illustration).

[c] Optional alloy N06022/2.4602 (Hastelloy® C-22 or equivalent). See Raised-Face flange per EN 1092-1 for flanged horn antenna (Page 241).

Note

Heights to sensor reference point are for stainless steel flanges. For optional alloy N06022/2.4602 (Hastelloy© C-22 or equivalent) see Flanged Horn dimensions above.

12.5 Flanged encapsulated antenna (2"/DN50/50A sizes only)

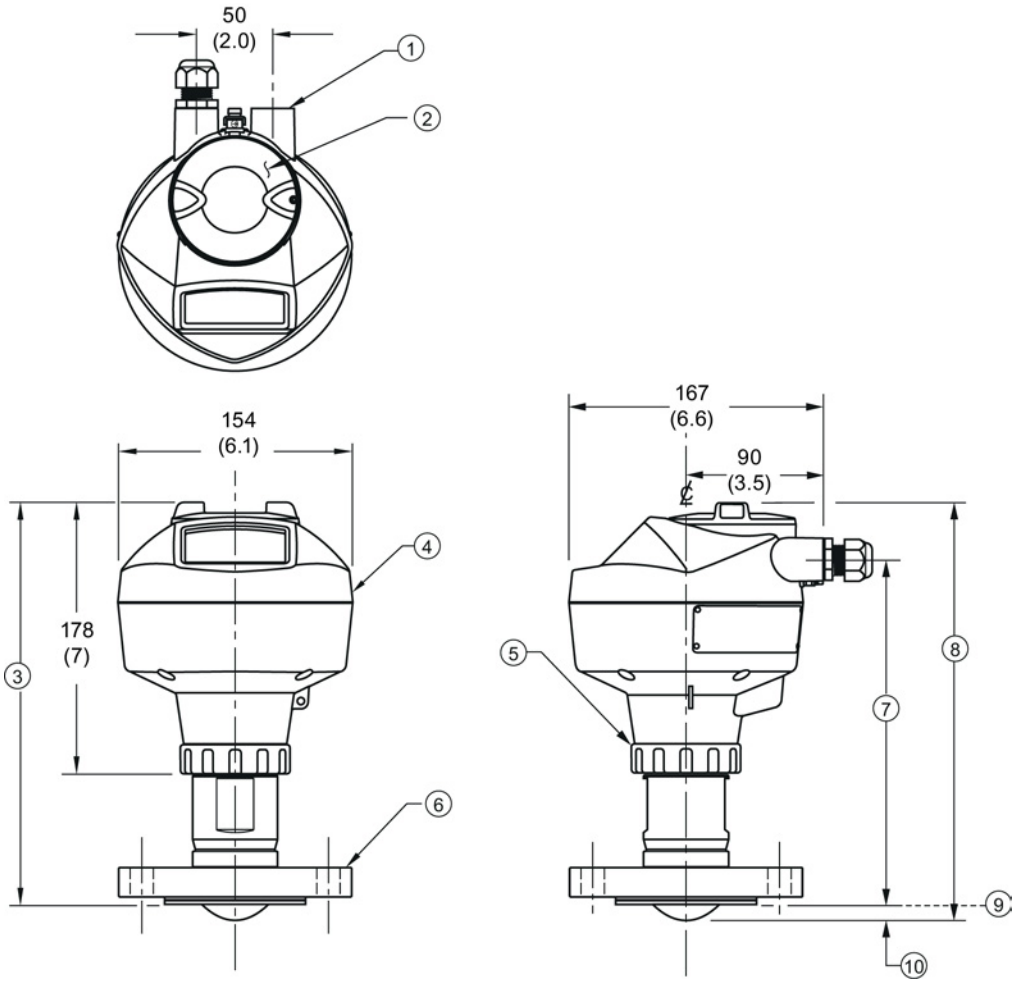

①	½" NPT cable entry, or M20 cable gland	⑥	flange
②	threaded cover	⑦	see table below
③	see table below	⑧	see table below
④	enclosure	⑨	sensor reference point
⑤	retaining collar	⑩	see table below

Dimensions in mm (inch)

Flanged encapsulated antenna (2"/DN50/50A) dimensions

Flange size	③ mm (inch)	⑦ mm (inch)	⑧ mm (inch)	⑩ mm (inch)[1]
2"/DN50/50A	263 (10.35)	223 (8.78)	274 (10.79)	11 (0.43)

[1] Height from tip of lens to sensor reference point as shown.

Flange size	Flange class	Flange O.D. [mm (inch)]	Antenna aperture size [mm (inch)]	Beam angle (°)[1]	Measurement range [m (ft)]
2"	150 LB	152 (5.98)	50 (1.97)	12.8	10 (32.8)[2]
DN50	PN10/16	165 (6.50)			
50A	10K	155 (6.10)			

[1] -3 dB in the direction of the polarization axis.

[2] 20m if installed in stillpipe

See Raised-Face Flange per EN 1092-1, (Page 243)and Polarization reference point (Page 31).

12.6 Flanged encapsulated antenna (3"/DN80/80A sizes and larger)

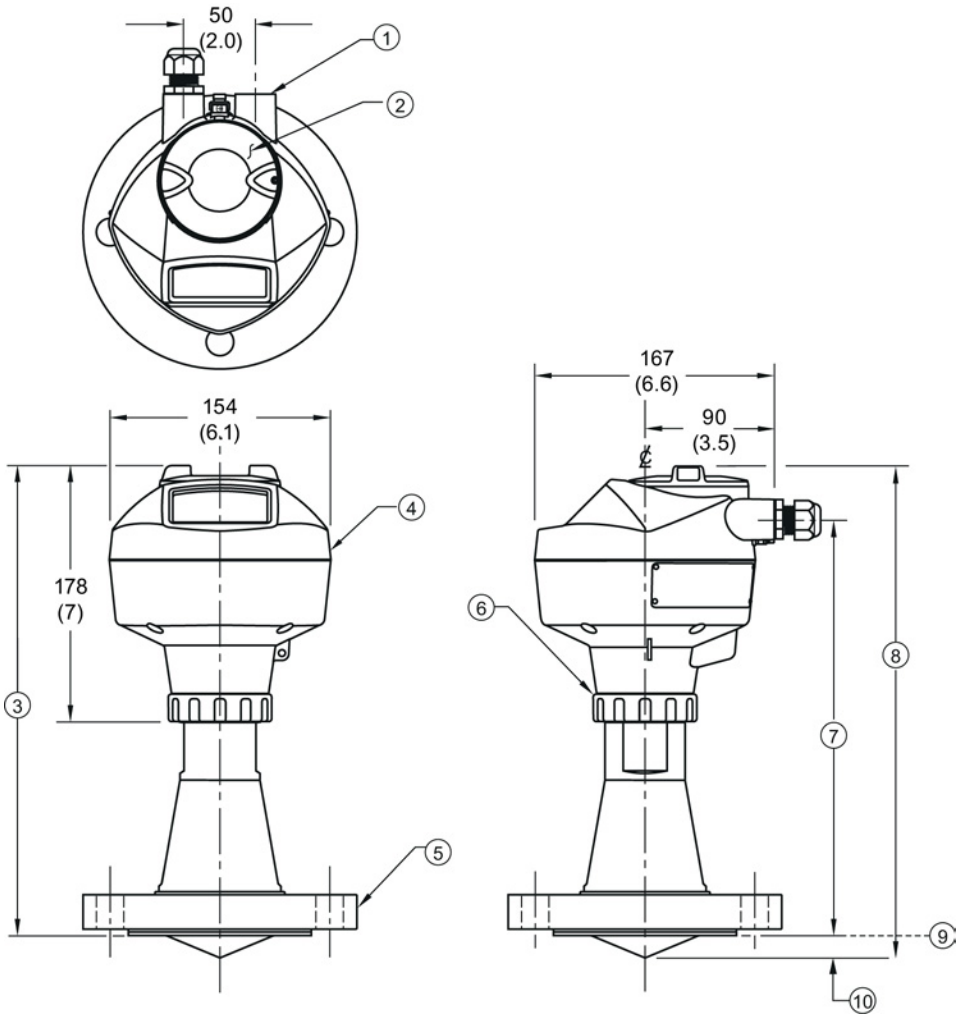

①	½" NPT cable entry, or M20 cable gland	⑥	retaining collar
②	threaded cover	⑦	see table below
③	see table below	⑧	see table below
④	enclosure	⑨	sensor reference point
⑤	flange	⑩	see table below

Dimensions in mm (inch)

Flanged encapsulated antenna (3"/DN80/80A and larger) dimensions

Flange size	③ mm (inch)	⑦ mm (inch)	⑧ mm (inch)	⑩ mm (inch)[1]
3"/DN80/80A	328 (12.91)	288 (11.34)	343 (13.50)	15 (0.59)
4"/DN100/100A	328 (12.91)	288 (11.34)	343 (13.50)	13 (0.51)
6"/DN150/150A	333 (13.11)	293 (11.54)	348 (13.70)	15 (0.59)

[1] Height from tip of lens to sensor reference point as shown. See also Raised-Face Flange per EN 1092-1.

Flange size	Flange class	Flange O.D. [mm (inch)]	Antenna aperture size [mm (inch)]	Beam angle (°)[1]	Measurement range [m (ft)]
3"	150 LB	190 (7.48)	75 (2.95)	9.6	20 (65.6)
DN80	PN10/16	200 (7.87)			
80A	10K	185 (7.28)			
4"	150 LB	230 (9.06)	75 (2.95)	9.6	20 (65.6)
DN100	PN10/16	220 (8.66)			
100A	10K	210 (8.27)			
6"	150 LB	280 (11.02)	75 (2.95)	9.6	20 (65.6)
DN150	PN10/16	285 (11.22)			
150A	10K	280 (11.02)			

[1] -3 dB in the direction of the polarization axis.

See Raised-Face Flange per EN 1092-1 (Page 243), and Polarization reference point (Page 31).

12.7 Hygienic encapsulated antenna (2" ISO 2852 sanitary clamp)

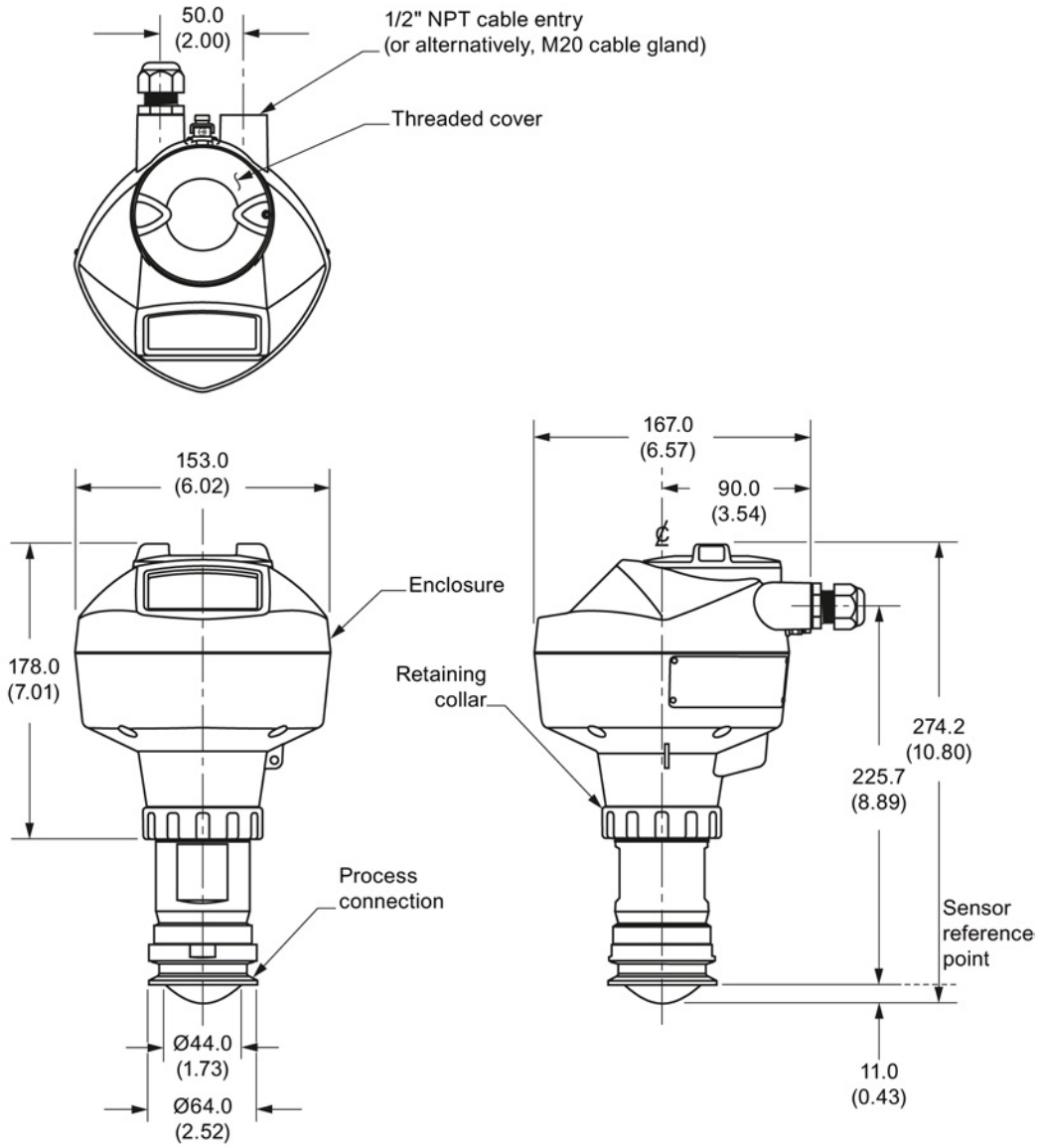

Dimensions in mm (inch)

12.8 Hygienic encapsulated antenna (3" ISO 2852 sanitary clamp)

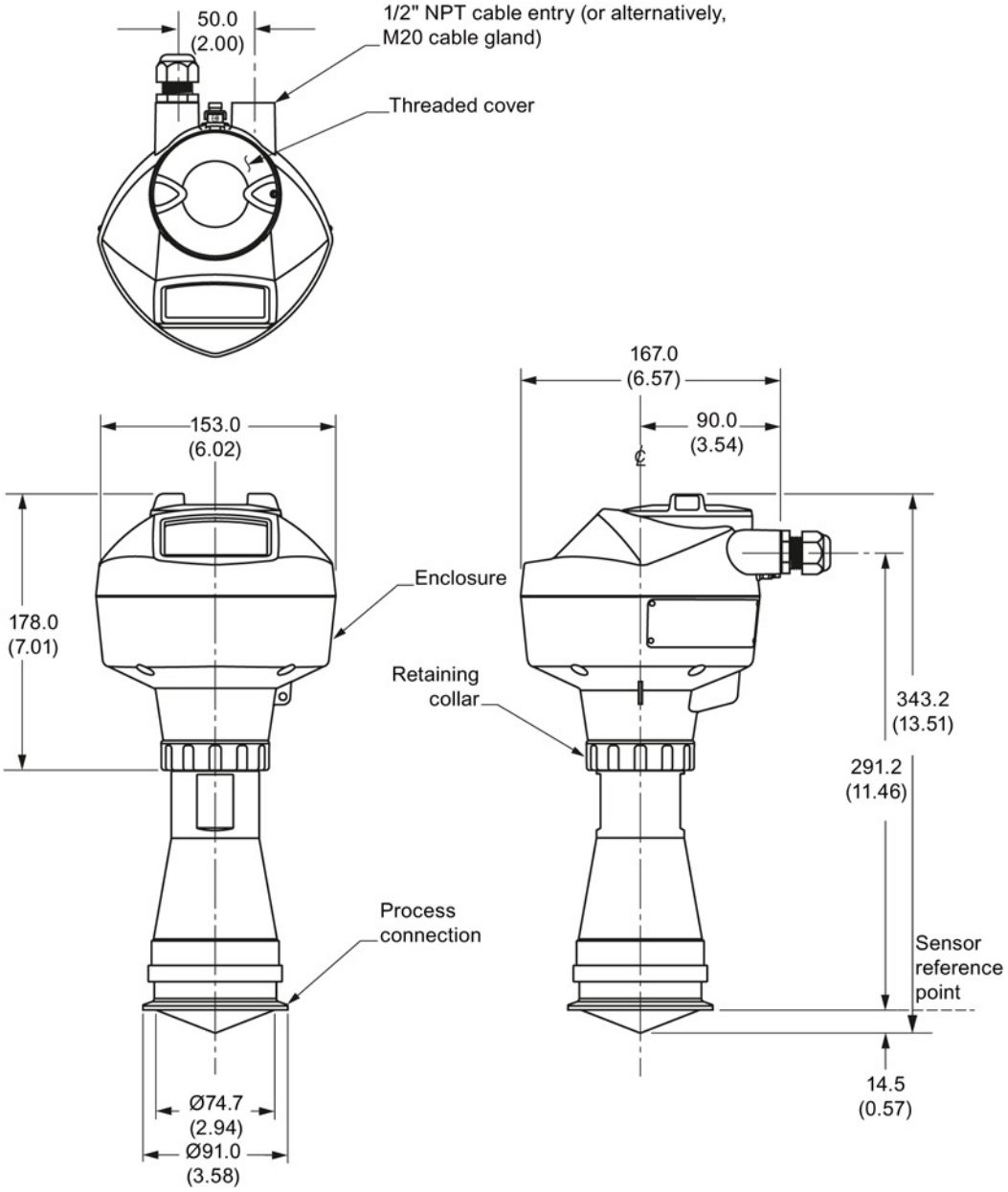

Dimensions in mm (inch)

12.9 Hygienic encapsulated antenna (4" ISO 2852 sanitary clamp)

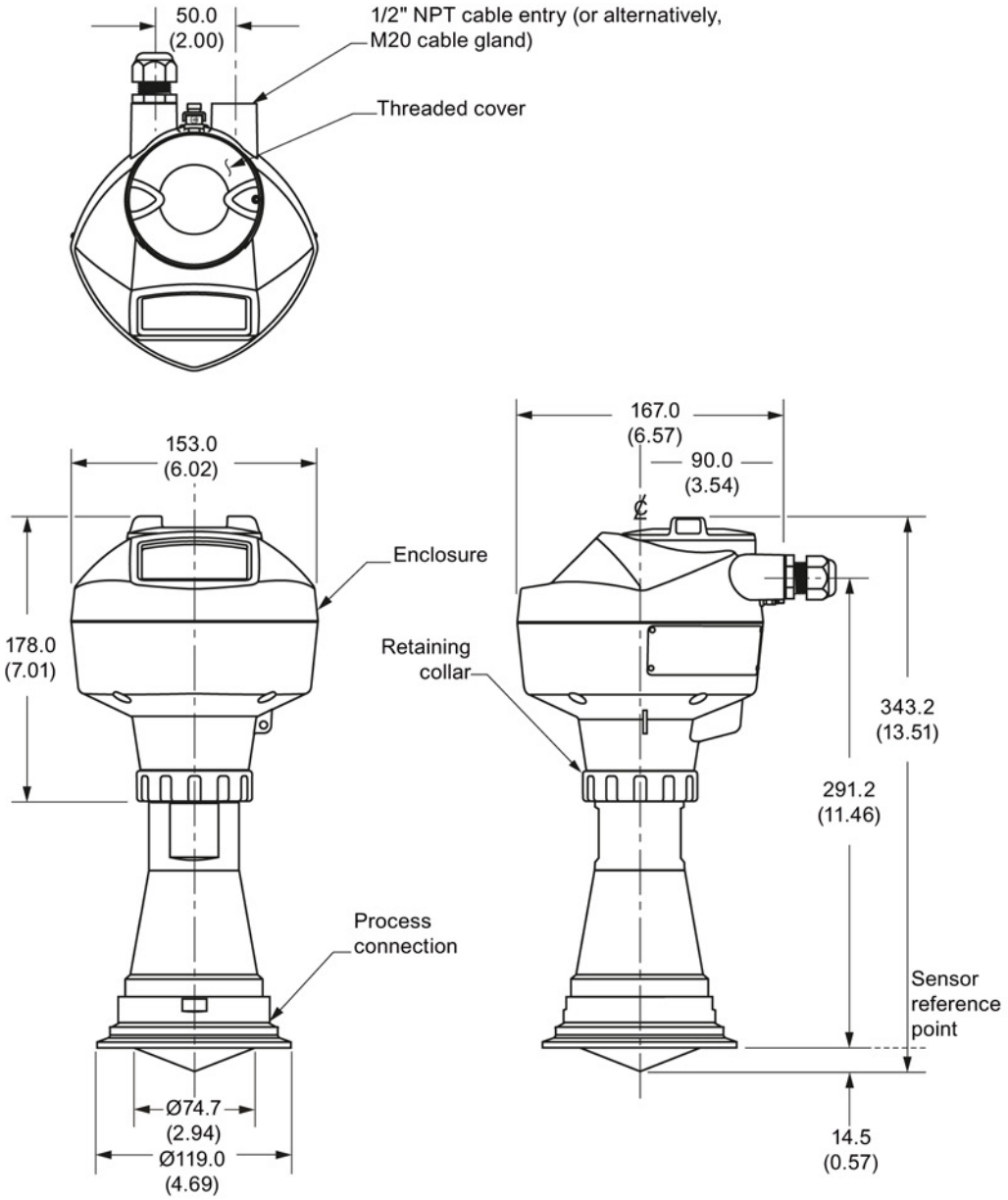

Dimensions in mm (inch)

12.10 Hygienic encapsulated antenna (DN 50 nozzle/slotted nut to DIN 11851)

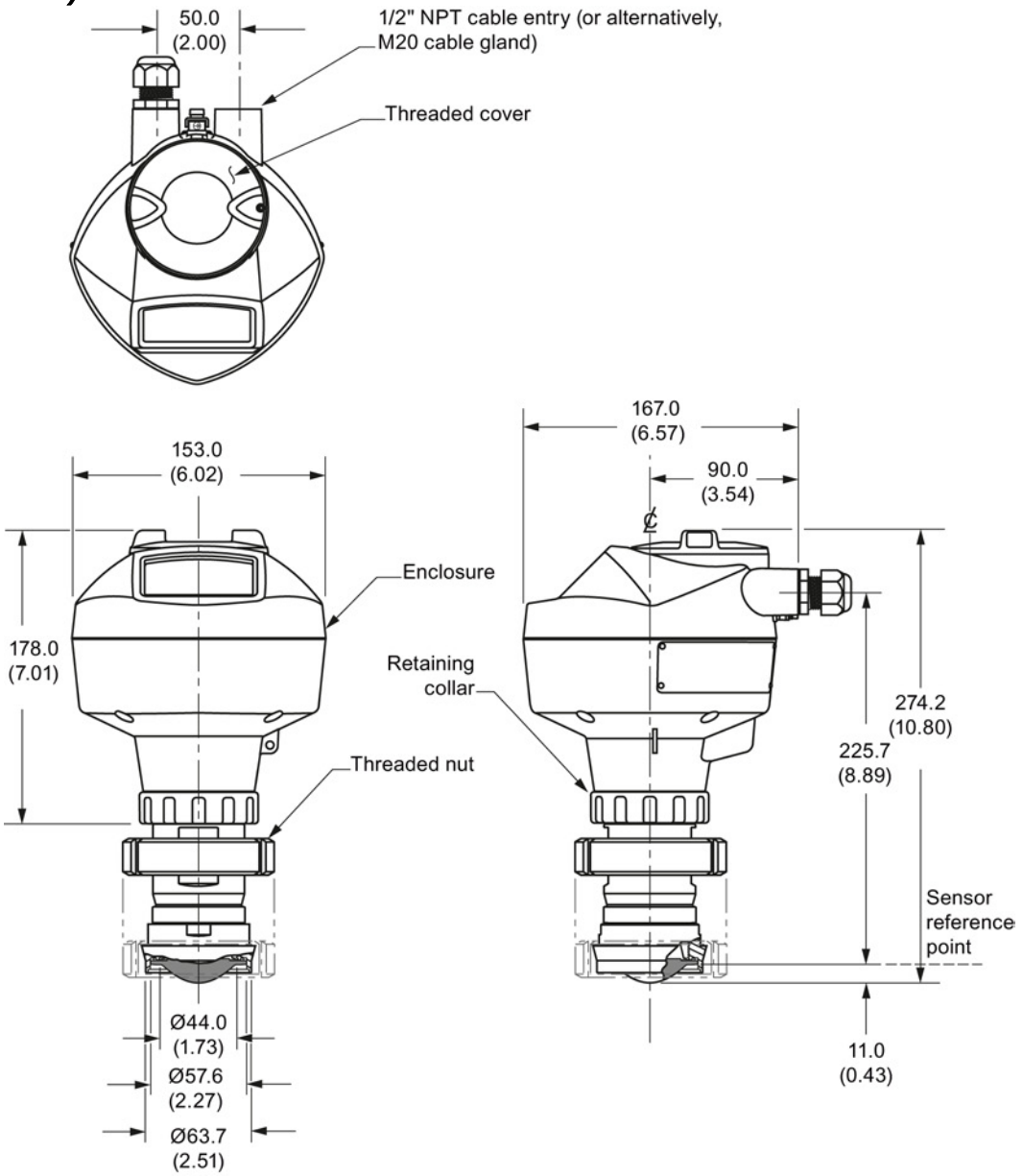

Dimensions in mm (inch)

Note

Cut out of process connection and placement of threaded nut are shown for illustration purposes only.

12.11 Hygienic encapsulated antenna (DN 80 nozzle/slotted nut to DIN 11851)

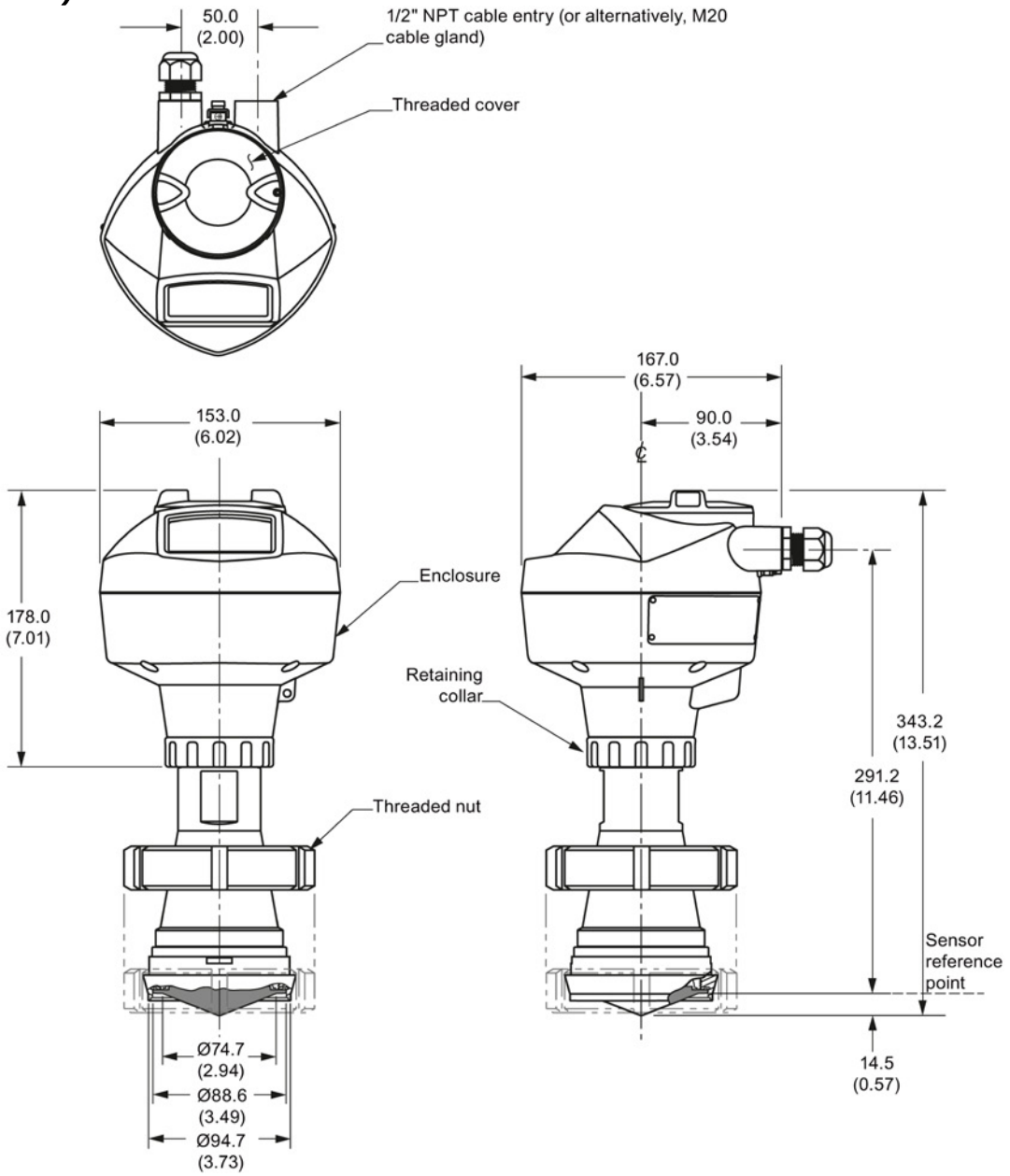

Dimensions in mm (inch)

Note

Cut out of process connection and placement of threaded nut are shown for illustration purposes only.

12.12 Hygienic encapsulated antenna (DN 100 nozzle/slotted nut to DIN 11851)

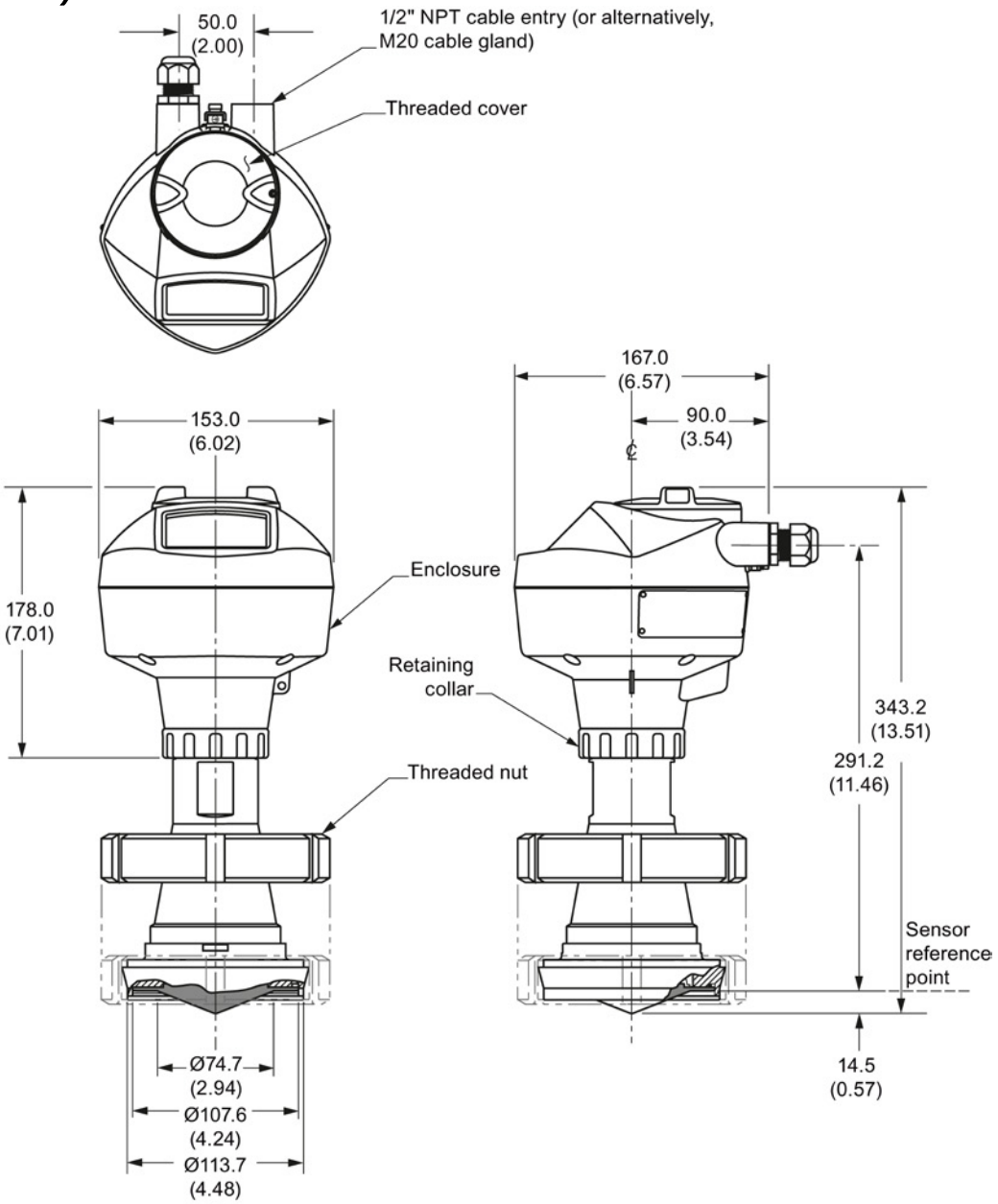

Dimensions in mm (inch)

Note

Cut out of process connection and placement of threaded nut are shown for illustration purposes only.

12.13 Hygienic encapsulated antenna (DN 50 aseptic clamp to DIN 11864-1)

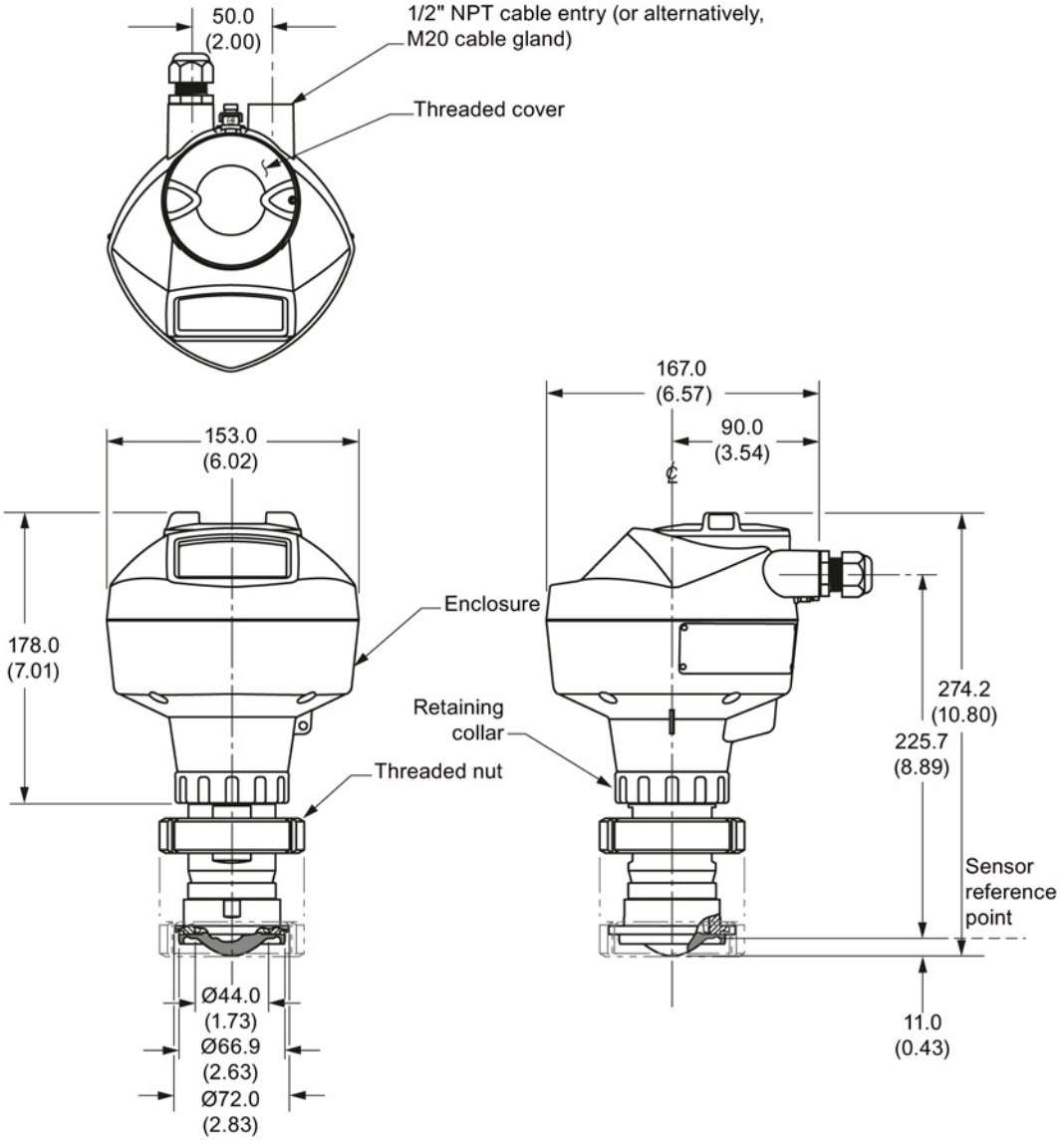

Dimensions in mm (inch)

Note

Cut out of process connection and placement of threaded nut are shown for illustration purposes only.

12.14 Hygienic encapsulated antenna (DN 80 aseptic clamp to DIN 11864-1)

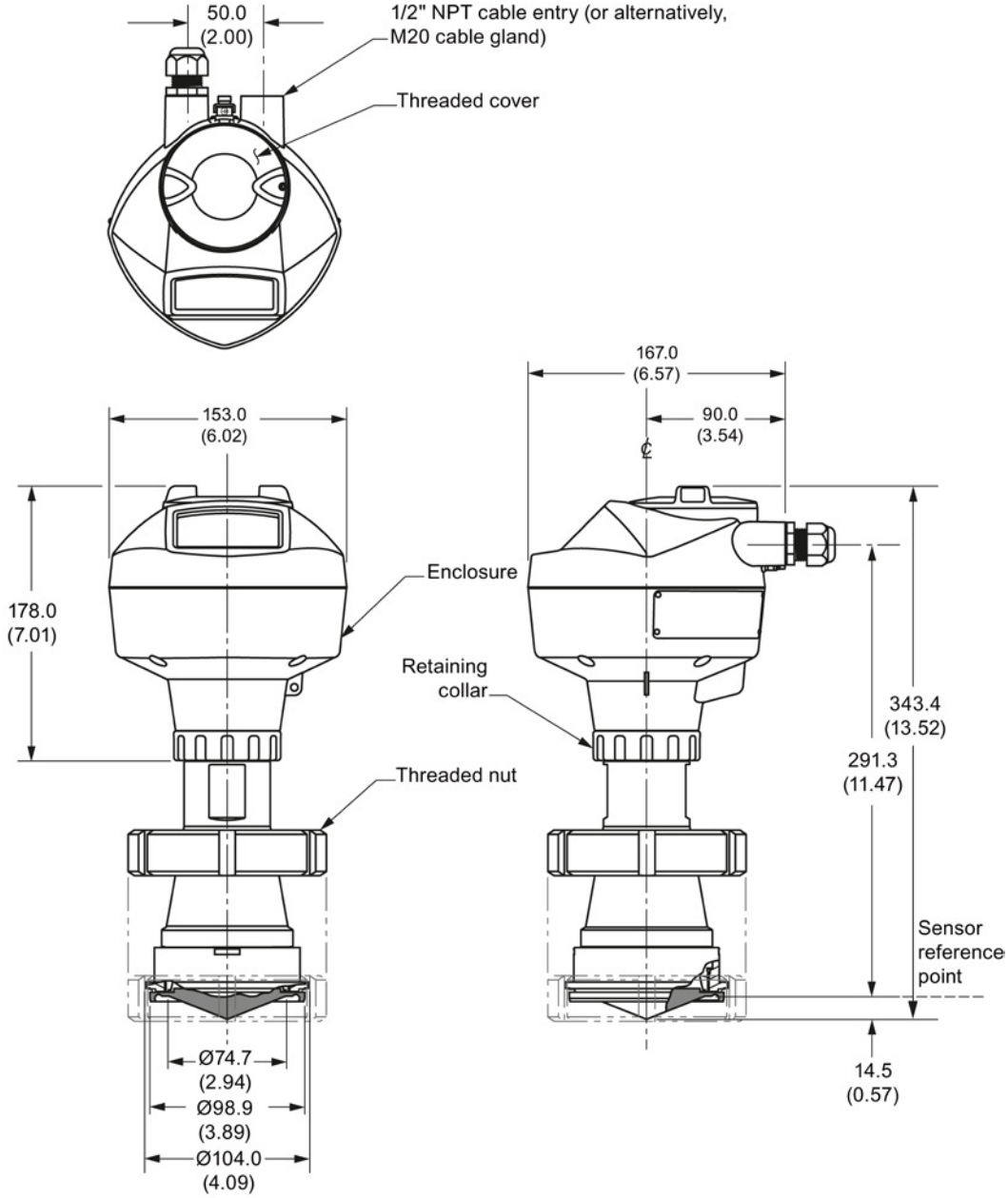

Dimensions in mm (inch)

Note

Cut out of process connection and placement of threaded nut are shown for illustration purposes only.

12.15 Hygienic encapsulated antenna (DN 100 aseptic clamp to DIN 11864-1)

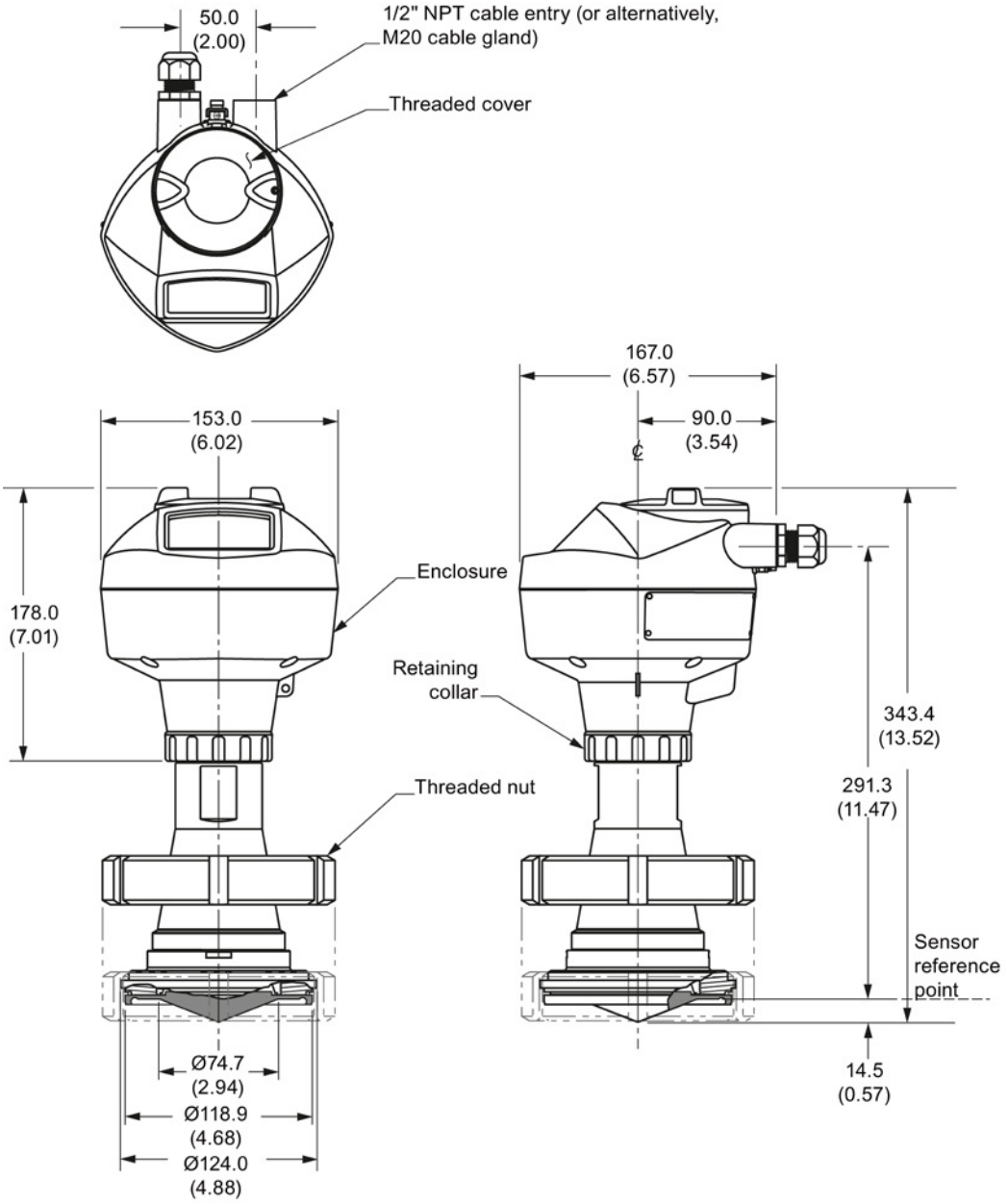

Dimensions in mm (inch)

Note

Cut out of process connection and placement of threaded nut are shown for illustration purposes only.

12.16 Hygienic encapsulated antenna (DN 50 aseptic flange to DIN 11864-2)

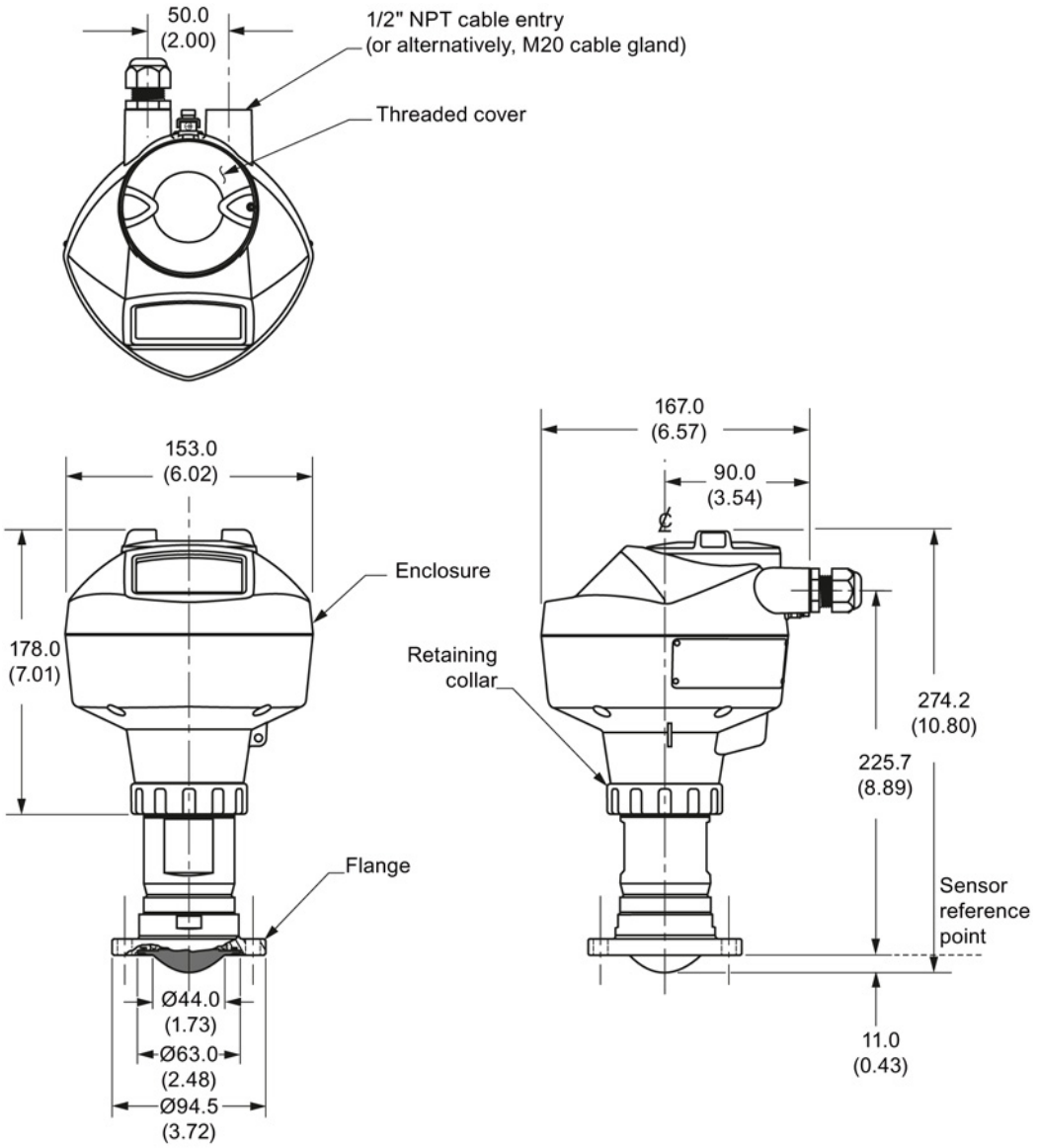

Dimensions in mm (inch)

Note

Cut out of process connection and flange are shown for illustration purposes only.

12.17 Hygienic encapsulated antenna (DN 80 aseptic flange to DIN 11864-2)

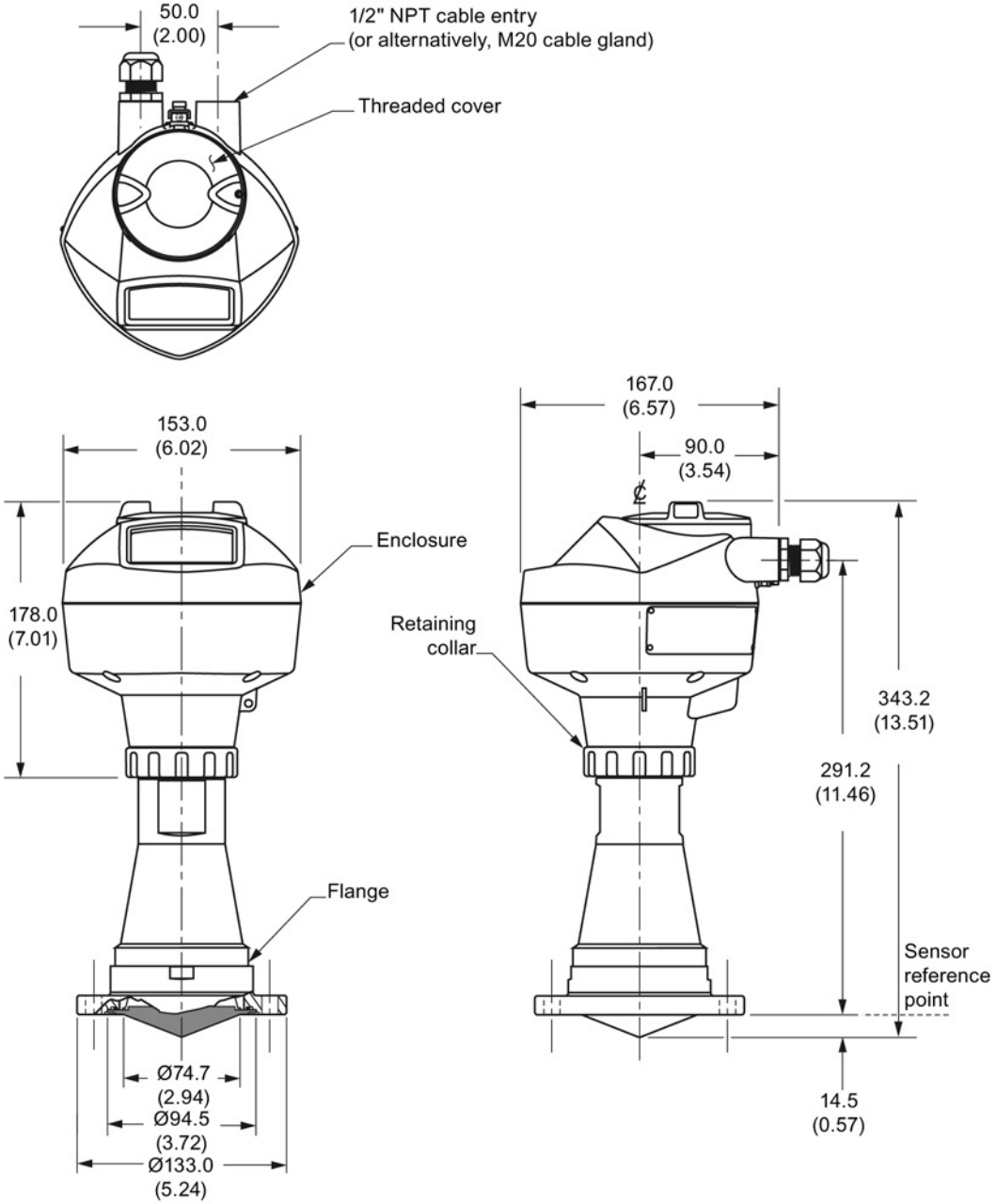

Dimensions in mm (inch)

Note

Cut out of process connection and flange are shown for illustration purposes only.

12.18 Hygienic encapsulated antenna (DN 100 aseptic flange to DIN 11864-2)

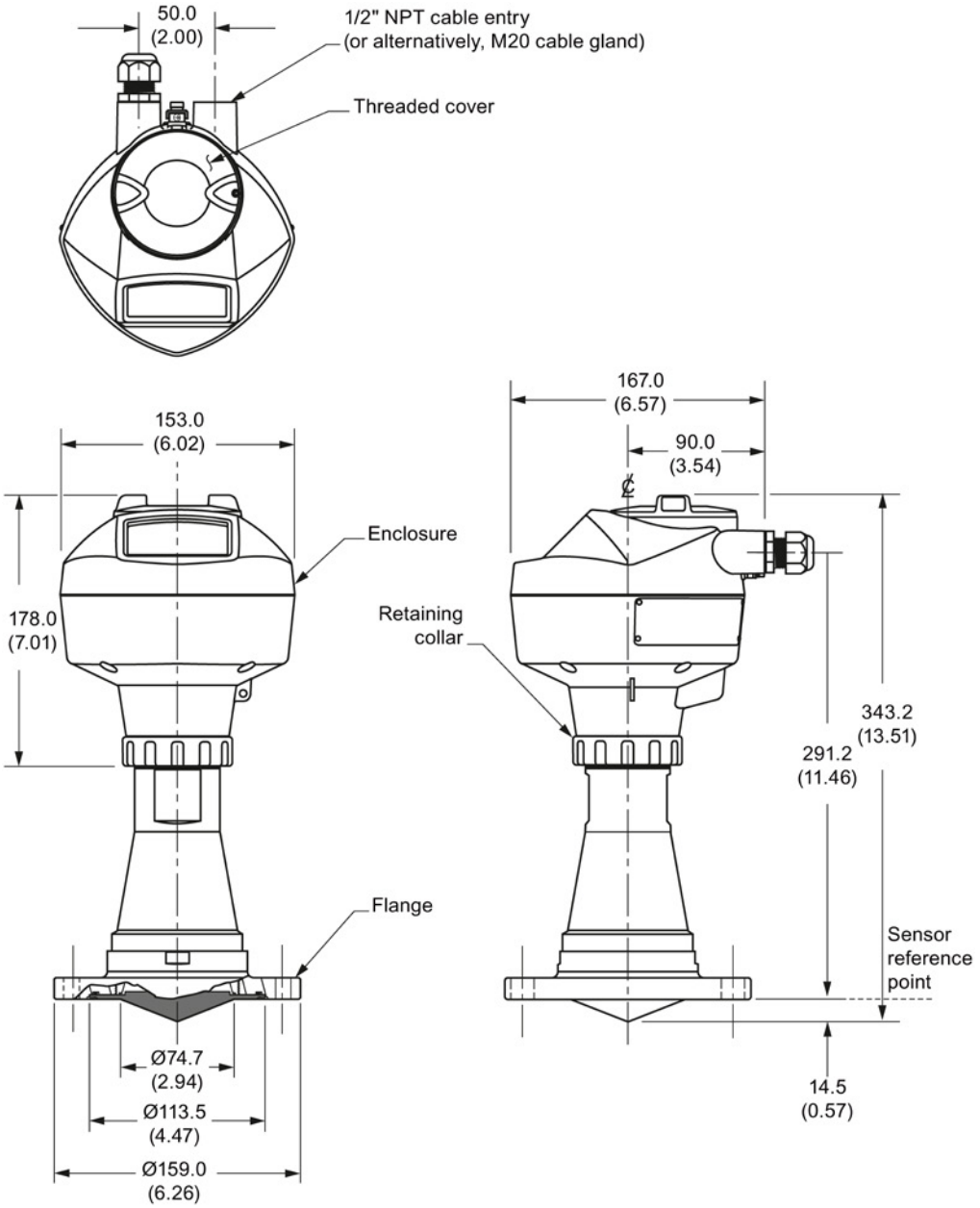

Dimensions in mm (inch)

Note

The cut out of the process connection and the flange are shown for illustration purposes only.

12.19 Hygienic encapsulated antenna (DN 50 aseptic clamp to DIN 11864-3)

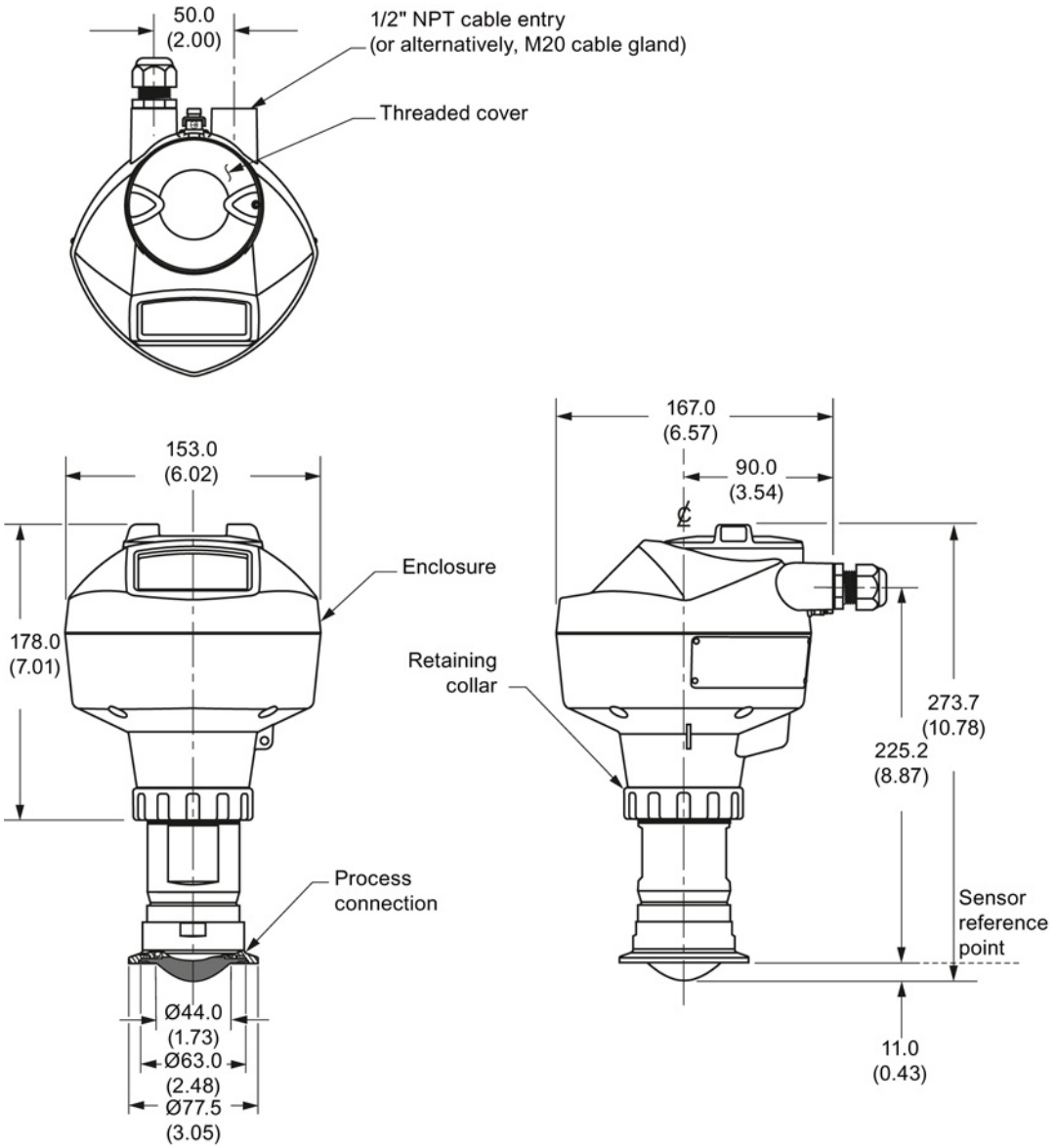

Dimensions in mm (inch)

Note

Cut out of process connection is shown for illustration purposes only.

12.20 Hygienic encapsulated antenna (DN 80 aseptic clamp to DIN 11864-3)

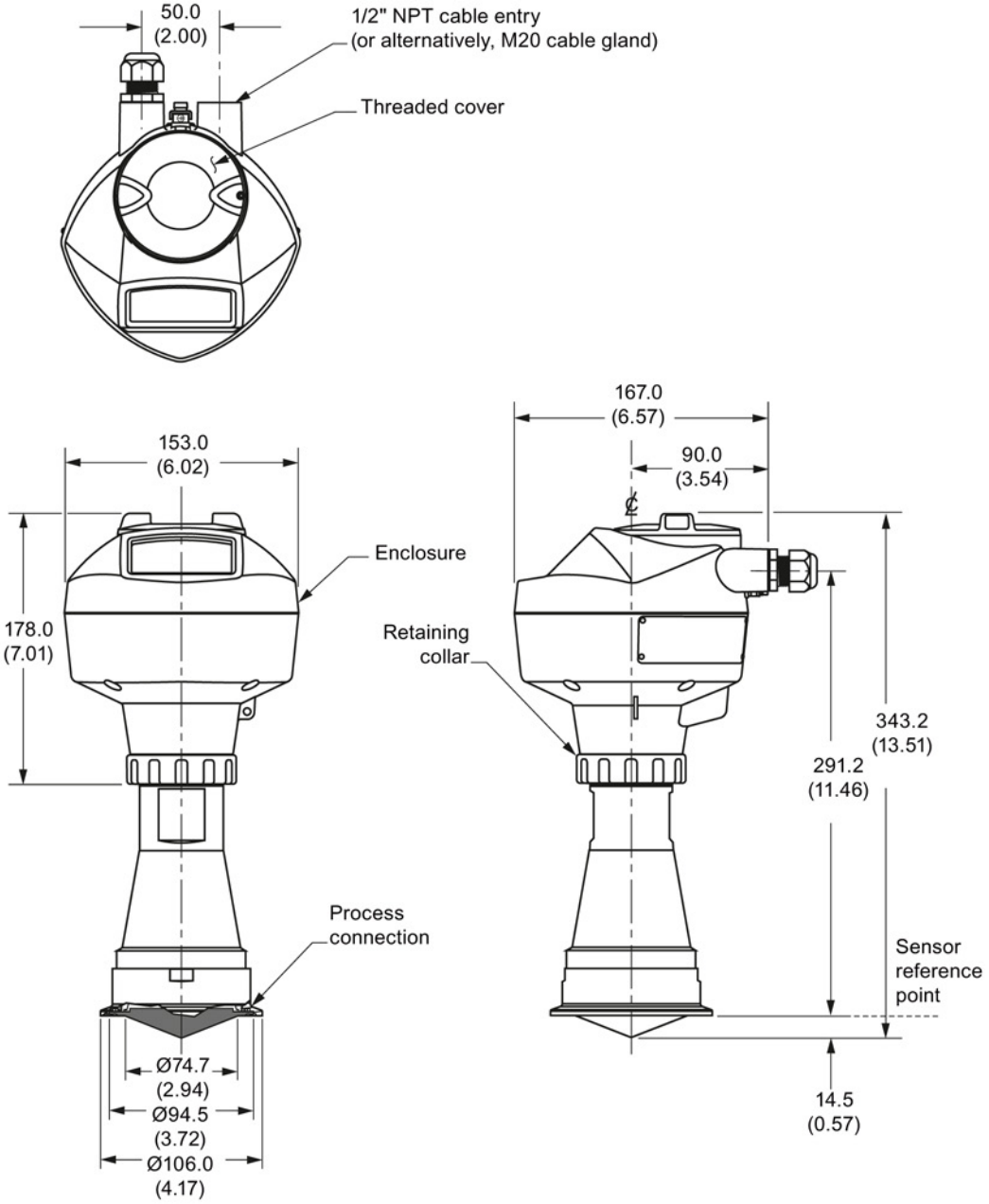

Dimensions in mm (inch)

Note

Cut out of process connection is shown for illustration purposes only.

12.21 Hygienic encapsulated antenna (DN 100 aseptic clamp to DIN 11864-3)

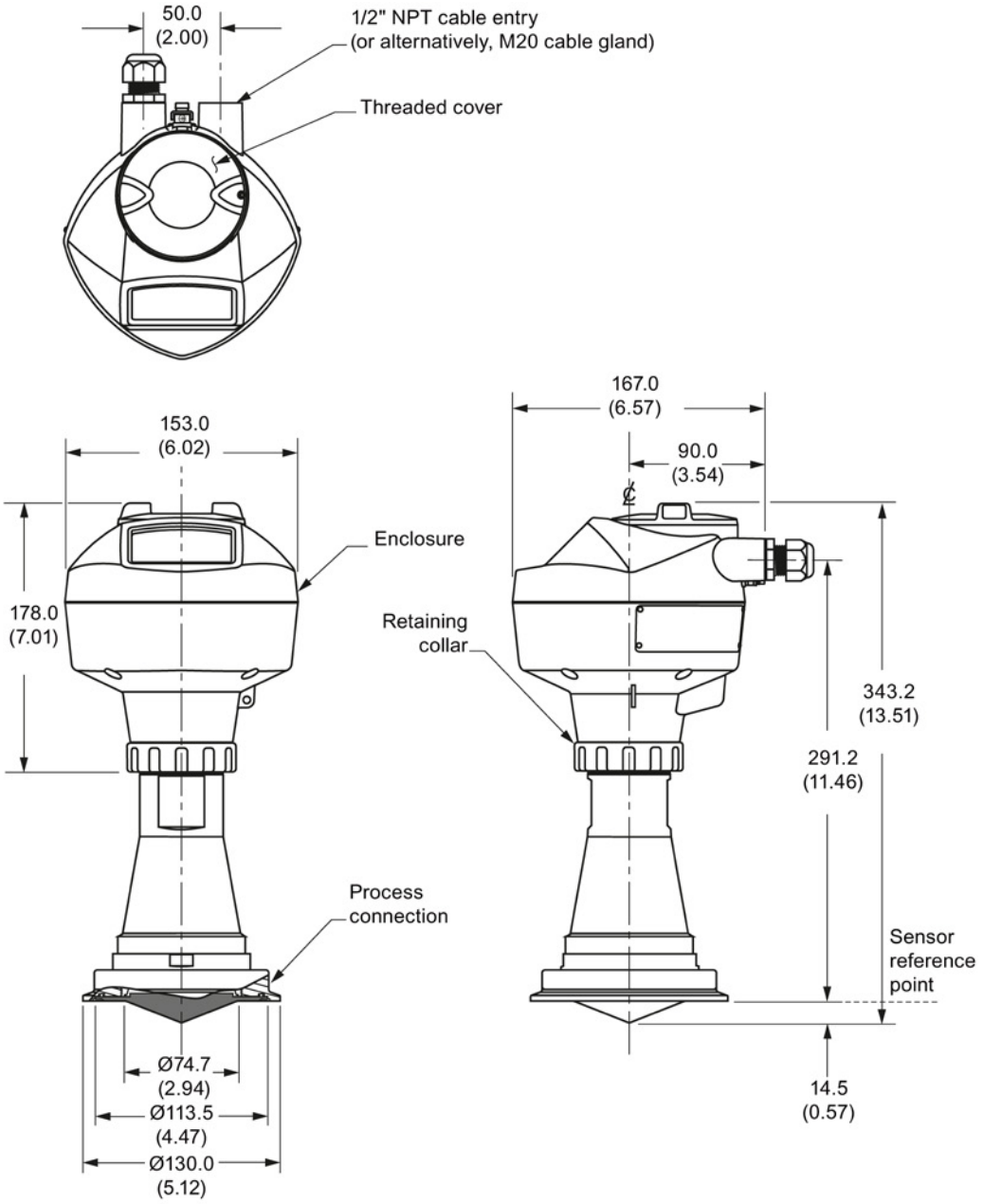

Dimensions in mm (inch)

Note

Cut out of process connection is shown for illustration purposes only.

12.22 Hygienic encapsulated antenna (Tuchenhagen Type N)

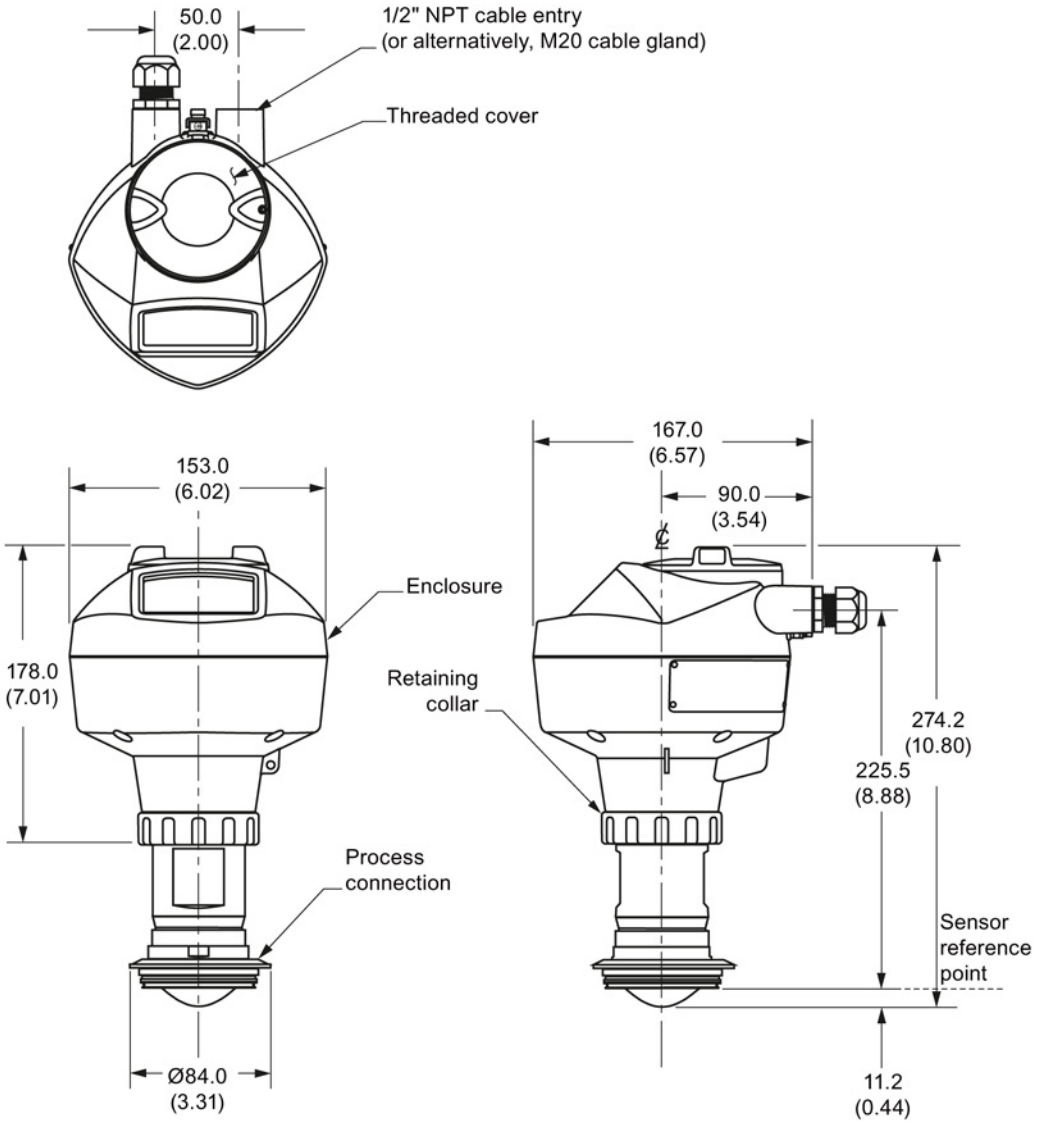

Dimensions in mm (inch)

12.23 Hygienic encapsulated antenna (Tuchenhagen Type F)

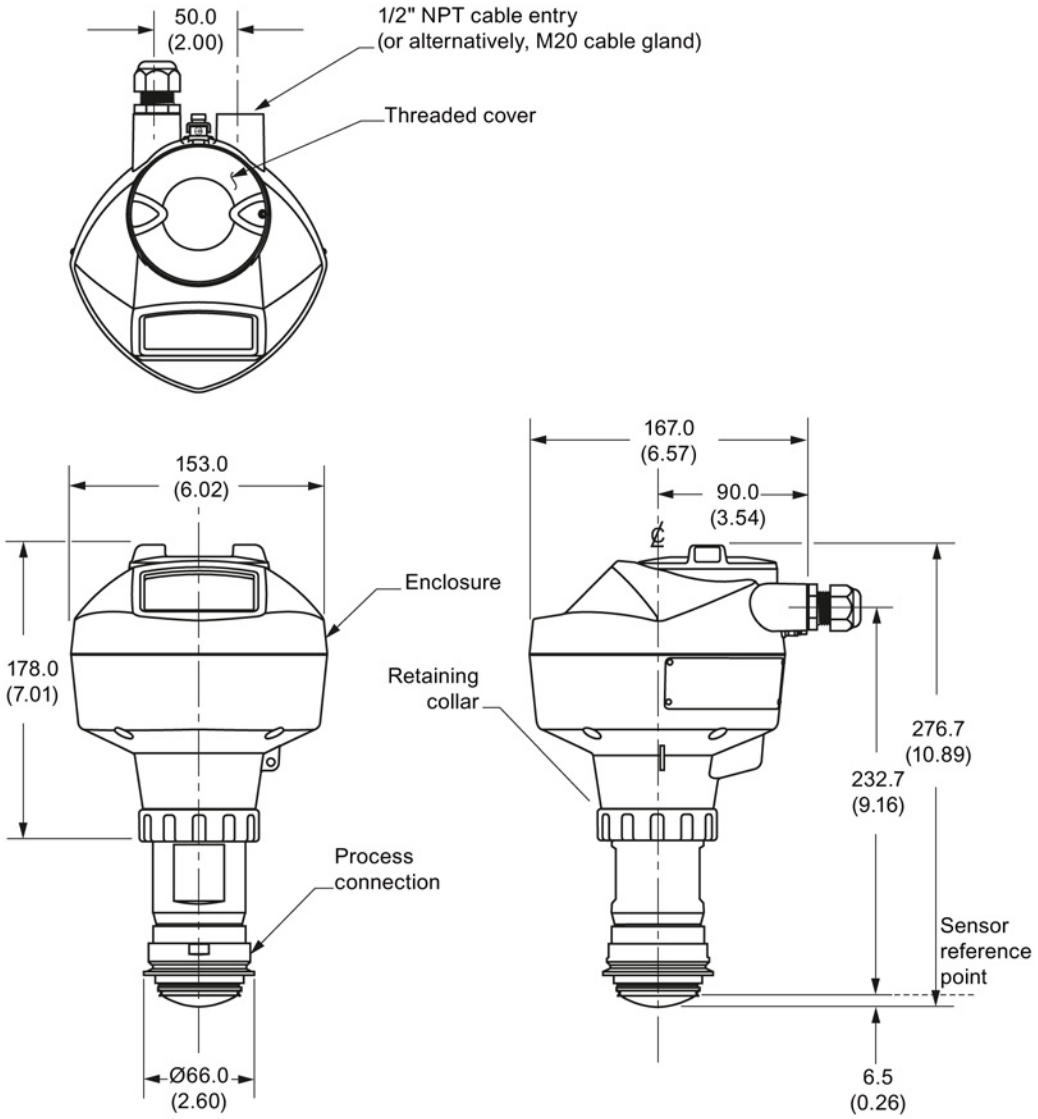

Dimensions in mm (inch)

12.24 Threaded PVDF antenna

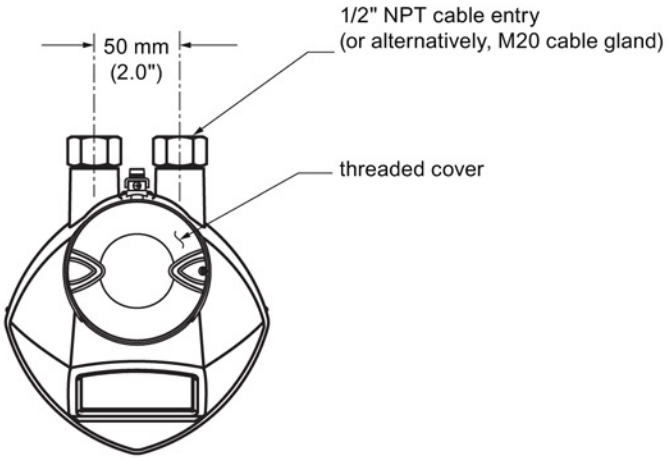

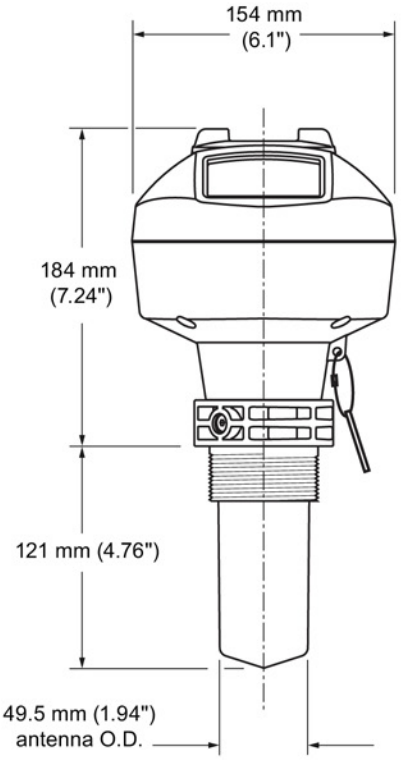

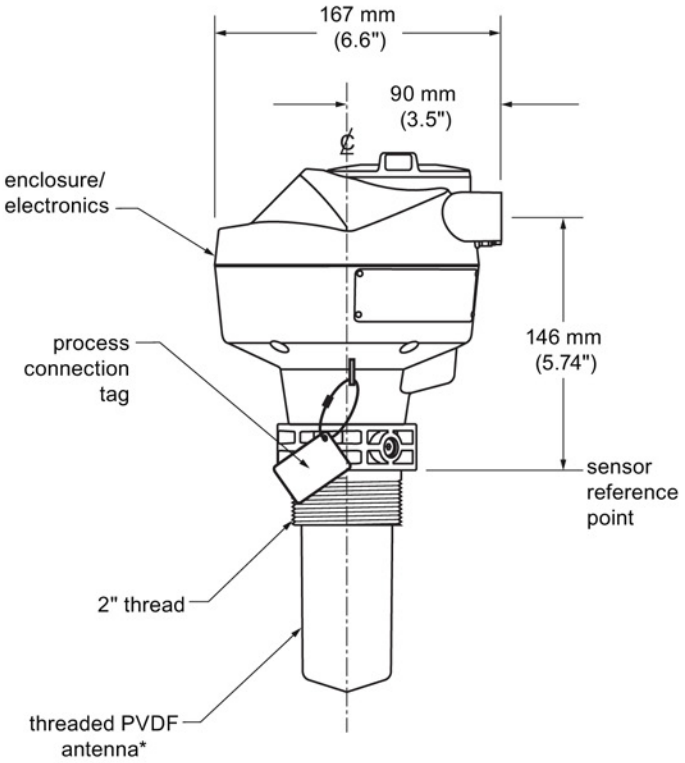

*The color of the antenna may vary.

Threaded PVDF antenna dimensions

Nominal antenna size	Antenna O.D.	Height to sensor reference point [a)]	Beam angle [b)]	Measurement range
50 mm (2")	49.5 mm (1.94")	121 mm (4.76")	19 degrees	10 m (32.8 ft)[c)]

[a)] Height from bottom of antenna to sensor reference point as shown: see dimension drawing.

[b)] -3dB in the direction of the polarization axis. See Polarization reference point (Page 31) for an illustration.

[c)] 20m when installed in stillpipe.

12.25 Threaded connection markings

With the exception of the threaded PVDF antenna, threaded connection markings are found on the flat face/faces of the process connection.

Serial number: a unique number allotted to each process connection, including the date of manufacture (MMDDYY) followed by a number from 001 to 999, (indicating the sequential unit produced).

12.26 Raised-Face flange per EN 1092-1 for flanged horn antenna

Stainless steel or optional alloy N06022/2.4602 (Hastelloy® C-22)

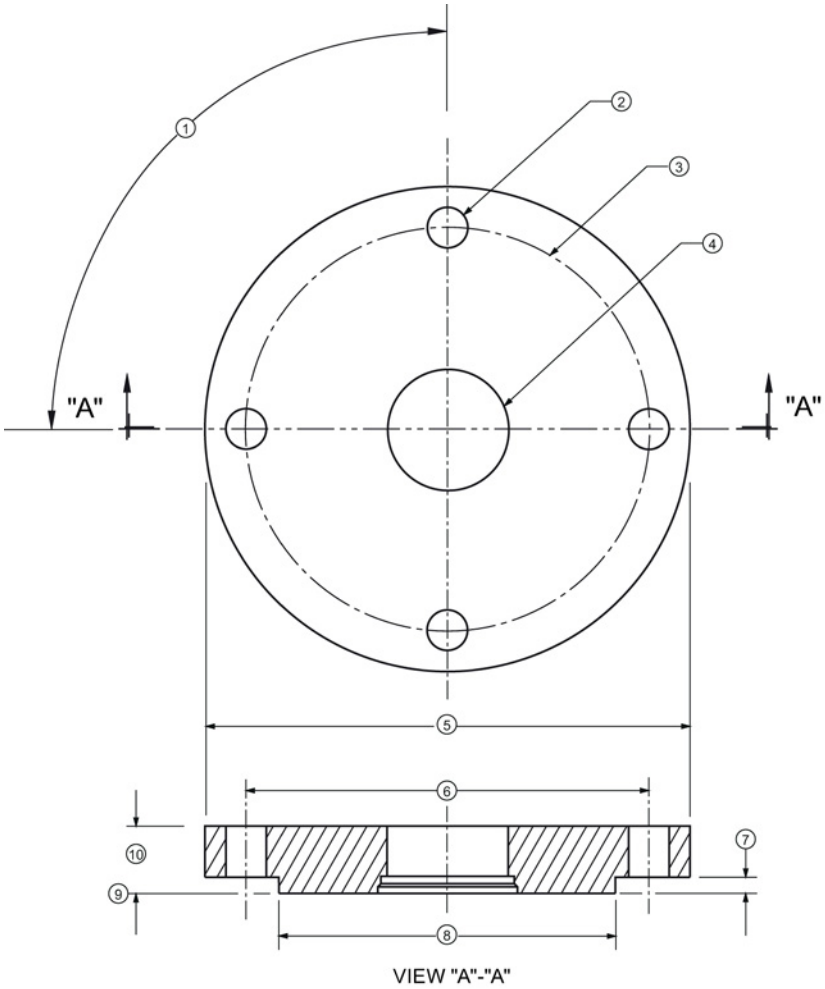

①	angle of adjacent bolt holes	⑥	bolt hole circle diameter
②	bolt hole diameter	⑦	facing height
③	bolt hole circle diameter	⑧	facing diameter
④	waveguide mounting hole	⑨	sensor reference point
⑤	Flange O.D.	⑩	thickness

Raised-Face flange dimensions

Pipe size	Flange bolt hole pattern	⑤ Flange O.D. (mm)	③ Bolt hole circle Ø (mm)	② Bolt hole Ø (mm)	No. of bolts	① Angle of adjacent bolt holes	⑧ Facing Ø (mm)	⑩ Thickness (mm)
DN50	PN10/PN16	165	125	18	4	90	102	18
DN80	PN10/PN16	200	160	18	8	45	138	20
DN100	PN10/PN16	220	180	18	8	45	158	20
DN150	PN10/PN16	285	240	22	8	45	212	22
DN50	PN25/PN40	165	160	18	4	90	138	20
DN80	PN25/PN40	200	160	18	8	45	138	24
DN100	PN25/PN40	235	190	22	8	45	162	24
DN150	PN25/PN40	300	250	26	8	45	218	28

Raised-Face flange markings

Blind Flange Markings (Optional Manufacturer's Logo [optional]; Flange Standard; Nominal Size; Material; Heat Code)	Machining Identification			Welded Assembly Identification [a)]		
	Serial no.	Logo	Flange series	Flange series	Heat Code no.	Facing
Manufacturer's logo; EN 1092-1 05 'B1'; 'DN50' 'PN16' '1.4404 or 1.4435' A1B2C3	mmddyyxxx		xxxxx	xxxxx	A1B2C3	RF

[a)] When flange material is alloy N06022/2.4602, additional material and heat code identification is provided.

The flange markings are located around the outside edge of the flange.

Serial number: a unique number allotted to each flange, including the date of manufacture (MMDDYY) followed by a number from 001 to 999 (indicating the sequential unit produced).

Flange series: the Siemens Milltronics drawing identification.

Heat code: a flange material batch code identification.

12.27 Raised-Face flange per EN 1092-1 for flanged encapsulated antenna

Stainless steel

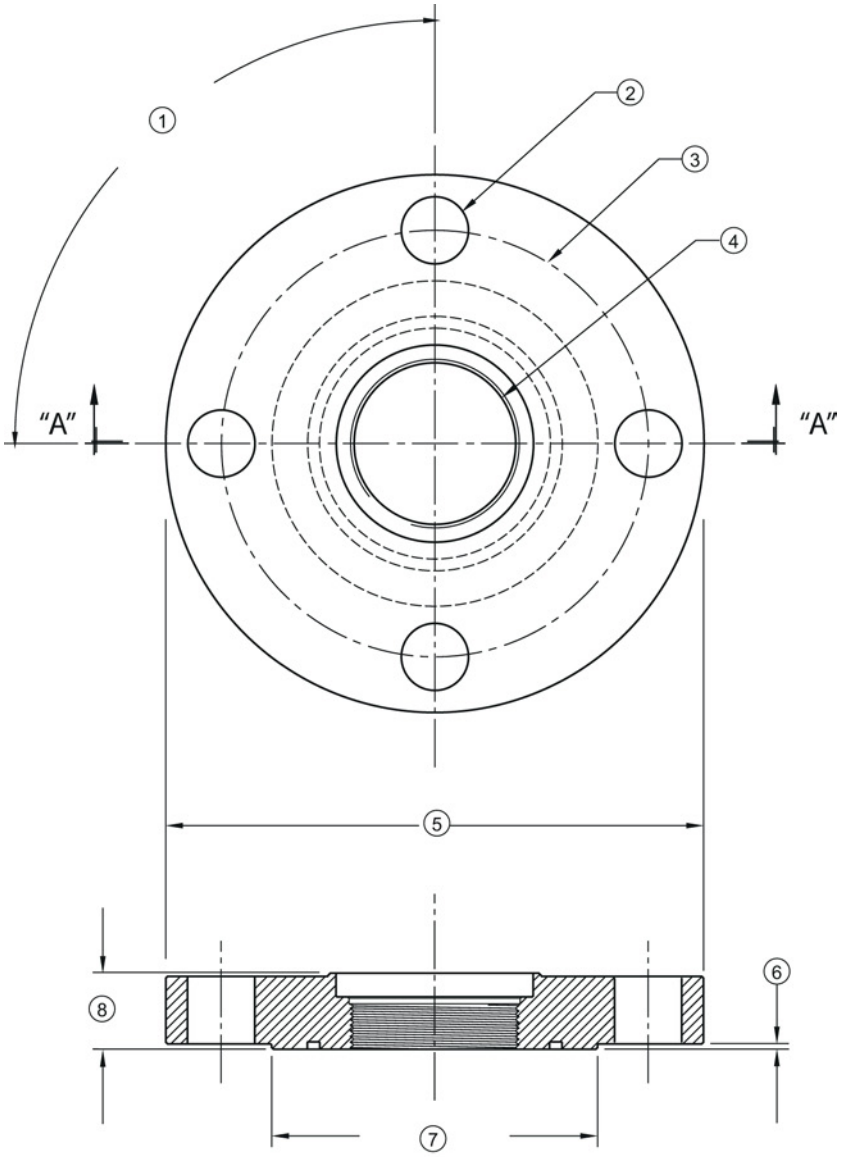

VIEW "A"-"A"

①	angle of adjacent bolt holes	⑤	flange O.D.
②	bolt hole diameter	⑥	facing height
③	bolt hole circle diameter	⑦	facing diameter
④	antenna	⑧	flange thickness

Raised-Face flange dimensions

Pipe size	Flange class	⑤ Flange O.D. [mm (inch)]	③ Bolt hole circle Ø [mm (inch)]	② Bolt hole Ø [mm (inch)]	No. of bolt holes	① Angle of adjacent bolt holes	⑦ Facing Ø [mm (inch)]	⑨ Flange thickness [mm (inch)]	⑥ Flange facing thickness [mm (inch)]
2"	150 LB	152 (5.98)	120.7 (4.75)	19 (0.75)	4	90	92.1 (3.63)	20.6 (0.81)	1.5 (0.06)
3"		190 (7.48)	152.4 (6.00)				127 (5.00)	25.9 (1.02)	2 (0.08)
4"		230 (9.06)	190.5 (7.50)		8	45	157.2 (6.19)		2 (0.08)
6"		280 (11.02)	241.3 (9.50)	22.2 (0.87)			215.9 (8.50)	26.9 (1.06)	1.5 (0.06)
DN50	PN10/16	155 (6.10)	125 (4.92)	18 (0.71)	4	90	102 (4.02)	18 (0.71)	2 (0.08)
DN80		200 (7.87)	160 (6.30)		8	45	138 (5.43)	20 (0.79)	2 (0.08)
DN100		220 (8.66)	180 (7.09)				158 (6.22)		2 (0.08)
DN150		285 (11.22)	240 (9.45)	22 (0.87)			212 (8.35)	22 (0.87)	2 (0.08)
50A	10K	155 (6.10)	120 (4.72)	19 (0.75)	4	90	96 (3.78)	16 (0.63)	2 (0.08)
80A		185 (7.28)	150 (5.91)		8	45	126 (4.96)	18 (0.71)	2 (0.08)
100A		210 (8.27)	175 (6.89)				151 (5.94)		2 (0.08)
150A		280 (11.02)	240 (9.45)	23 (0.91)			212 (8.35)	22 (0.87)	2 (0.08)

Raised-Face flange markings

Blind Flange Markings (Optional Manufacturer's Logo [optional]; Flange Standard; Nominal Size; Material; Heat Code)	Machining Identification			Welded Assembly Identification		
	Serial no.	Logo	Flange series	Flange series	Heat Code no.	Facing
Manufacturer's logo; EN 1092-1 05 'B1'; 'DN50' 'PN16' '1.4404 or 1.4435' A1B2C3	mmddyyxxx		xxxxx	xxxxx	A1B2C3	RF

The flange markings are located around the outside edge of the flange.

Serial number: a unique number allotted to each flange, including the date of manufacture (MMDDYY) followed by a number from 001 to 999 (indicating the sequential unit produced).

Flange series: the Siemens Milltronics drawing identification.

Heat code: a flange material batch code identification.

12.28 Flat-Face flange

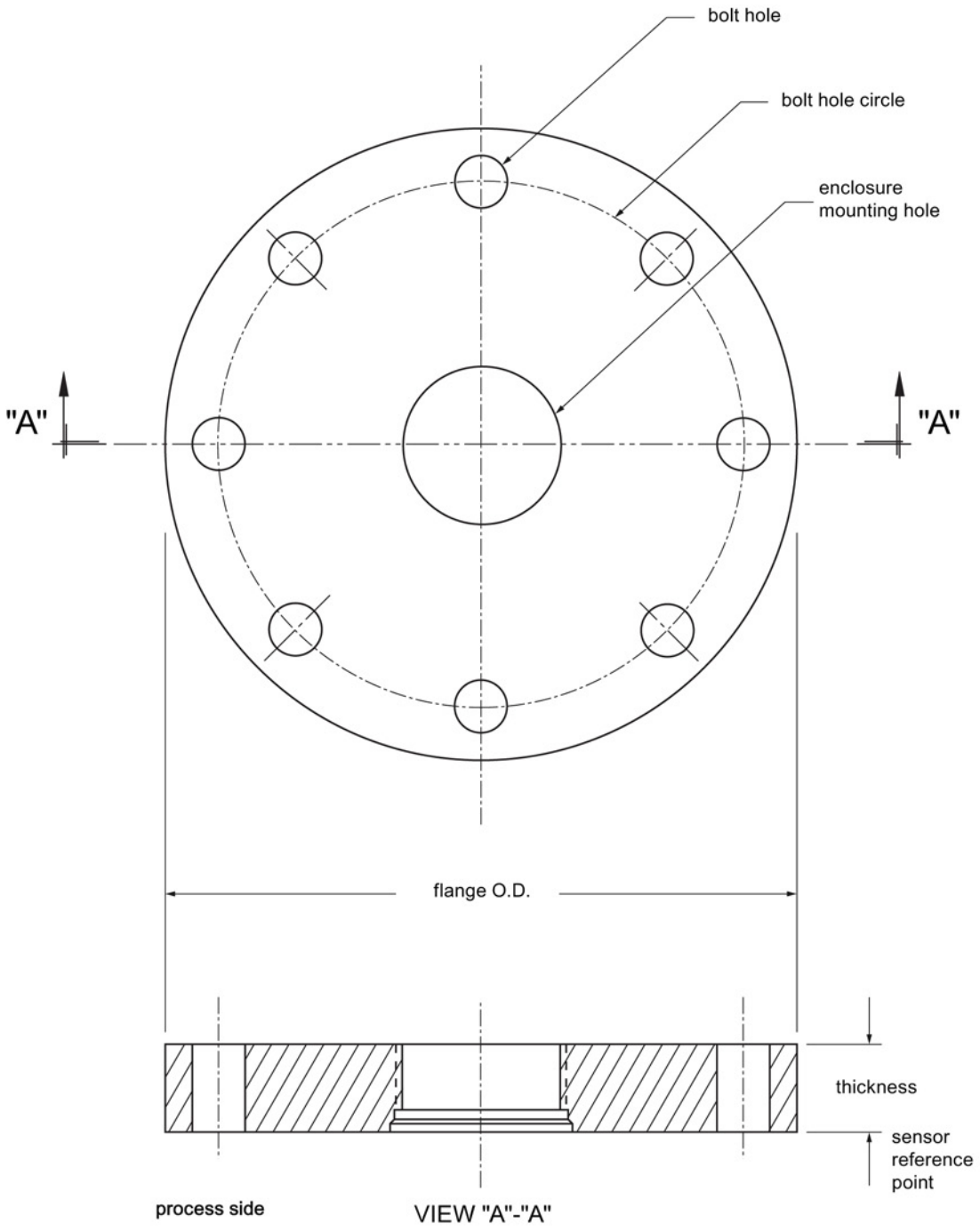

Flat-Face flange dimensions

Flange size [a]	Flange class	Flange O.D.	Bolt hole circle Ø	Bolt hole Ø	No. of bolt holes	Thickness
2"	ASME 150 lb	6.0"	4.75"	0.75"	4	0.88"
3"	ASME 150 lb	7.5"	6.0"	0.75"	4	0.96"
4"	ASME 150 lb	9.0"	7.50"	0.75"	8	1.25"
2"	ASME 300 lb	6.50"	5.00"	0.75"	8	1.12"
3"	ASME 300 lb	8.25"	6.62"	0.88"	8	1.38"
4"	ASME 300 lb	10.00"	7.88"	0.88"	8	1.50"
DN50	EN PN16	165 mm	125 mm	18 mm	4	24.4 mm
DN80	EN PN16	200 mm	160 mm	18 mm	8	31.8 mm
DN100	EN PN16	220 mm	180 mm	18 mm	8	31.8 mm
DN50	EN PN40	165 mm	125 mm	18 mm	4	25.4 mm
DN80	EN PN40	200 mm	160 mm	18 mm	8	31.8 mm
DN100	EN PN40	235 mm	190 mm	22 mm	8	38.1 mm
50A	JIS 10K	155 mm	120 mm	19 mm	4	23.8 mm
80A	JIS 10K	185 mm	150 mm	19 mm	8	24.4 mm
100A	JIS 10K	210 mm	175 mm	19 mm	8	28.5 mm

[a] A 2" flange is designed to fit a 2" pipe: for actual flange dimensions see Flange O.D. Flange markings located around the outside edge of the flat faced flange identify the flange assembly on which the device is mounted.

Flat-Face flange markings

Flat Face Flange Identification							Welded Assembly Identification	
Serial No.	Logo	Flange series			Material	Heat code	Flange series	Heat code no.
		Series	Nominal size					
MMDDYYXXX		25556	2	150	316L/ 1.4404 or 316L/ 1.4435	A1B2C3	25546	A1B2C3
			DN80	PN16				

Serial number: A unique number allotted to each flange, including the date of manufacture (MMDDYY) followed by a number from 001 to 999 (indicating the sequential unit produced).

Flange series: The Siemens Milltronics drawing identification.

Nominal size: The flange size followed by the hole pattern for a particular flange class. For example:

- A 2 inch ASME B16.5 150 lb class flange (North America)
- A DN80 EN 1092-1 PN16 class flange (Europe)

Material: The basic flange material (AISI or EU material designation). North American material codes are followed by European ones. For example, material designation 316L/1.4404.

Heat code: A flange material batch code identification.

12.29 Aseptic/hygienic flange DN50, DN80, DN100 for DIN 11864-2

Aseptic/hygienic flange DN50

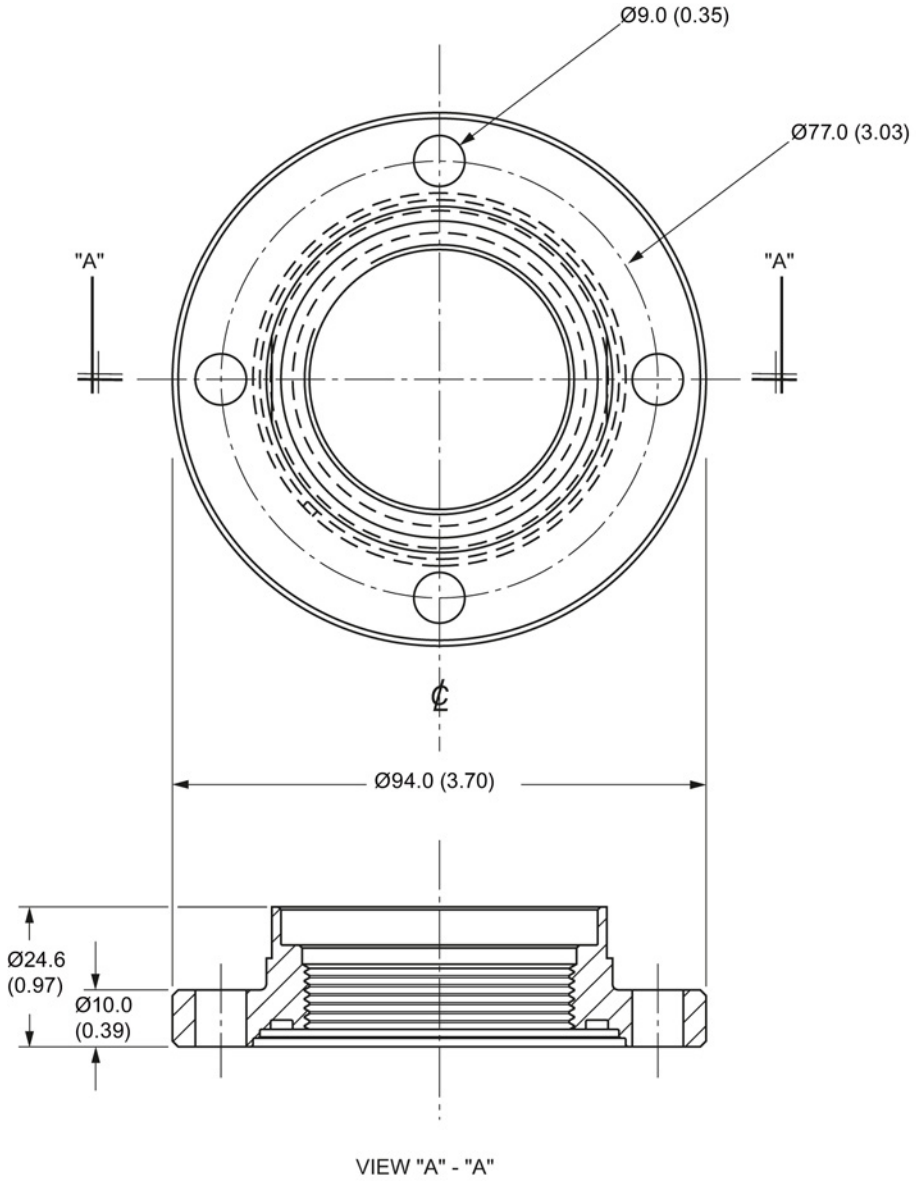

Dimensions in mm (inch)

Aseptic/hygienic flange DN80

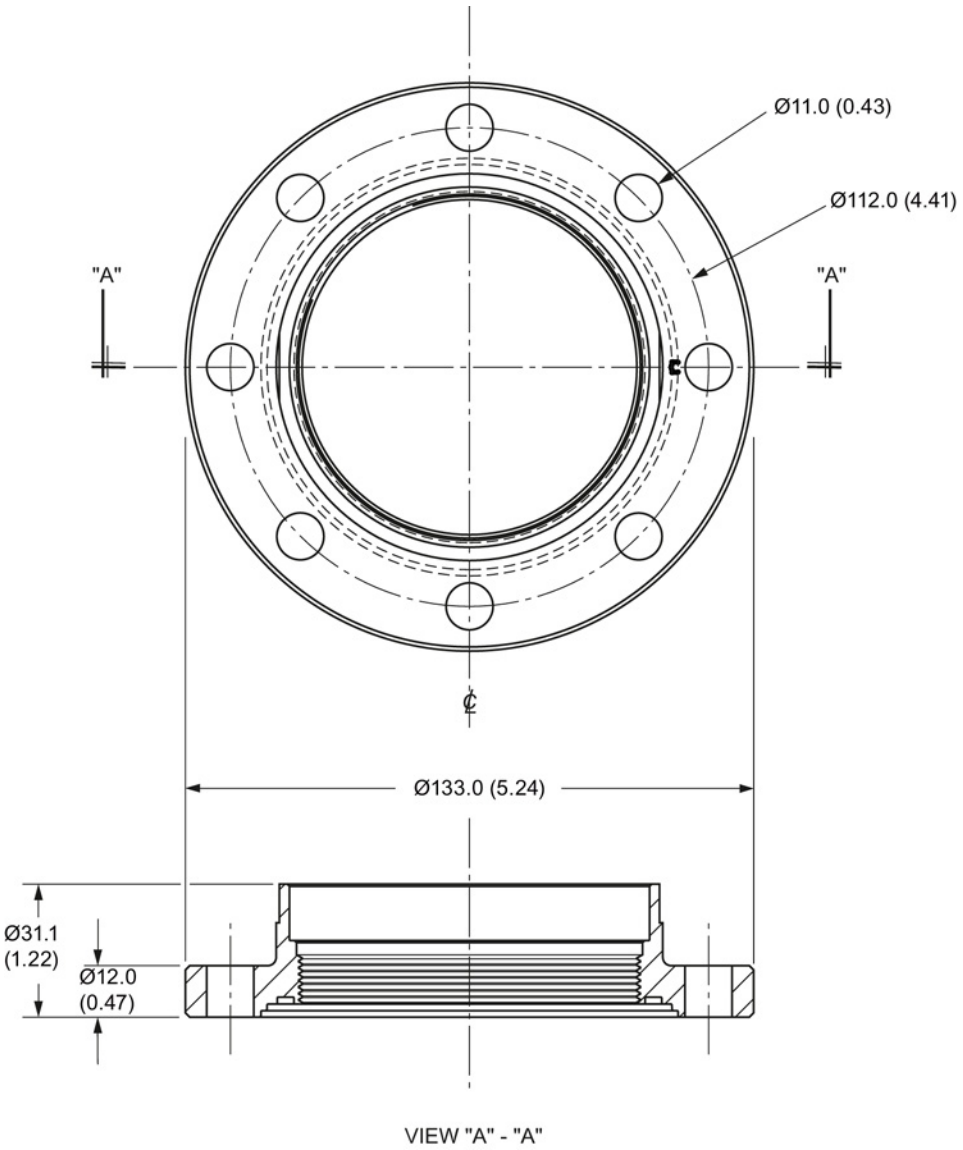

Dimensions in mm (inch)

Aseptic/hygienic flange DN100

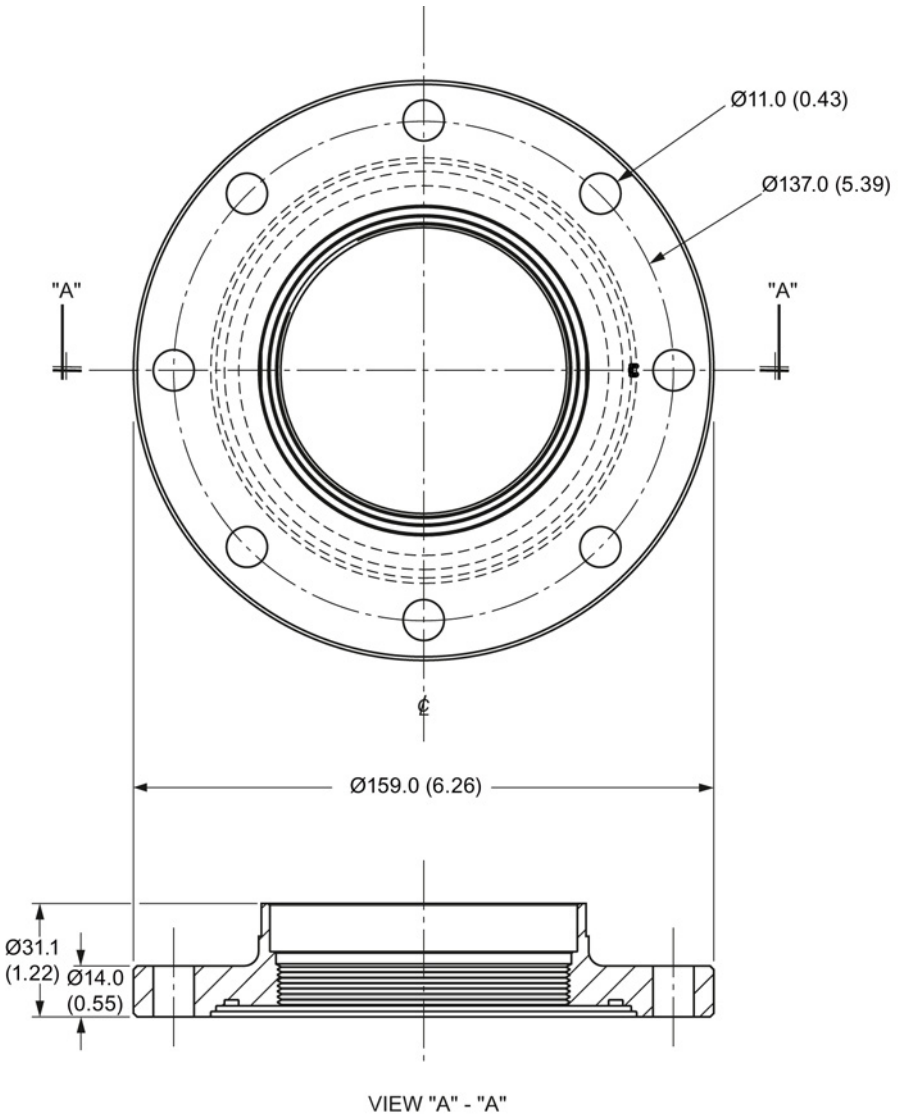

Dimensions in mm (inch)

12.30 Process connection tag (pressure rated versions)

For pressure-rated versions only, the process connection label lists the following information:

Process connection tag (pressure rated versions)

Item	Sample Text	Comments/Explanation
SERIAL #	GYZ / 00000000	Pressure Boundary Assembly
NOMINAL PIPE SIZE (DN)	4 INCH / 100mm	Nominal Pipe Size
INSTRUMENT MAWP (PS)	11.0 BAR	Maximum Allowable Working Pressure at Design Temperature for the device
DESIGN TEMP. (TS)	200 ºC	Maximum Allowable Working Temperature
MINIMUM PROCESS	15.9 BAR AT 40 ºC	Minimum Wetted Process Conditions
TEST PRESSURE (PT)	22.7 BAR	Production Test Pressure
TEST DATE	10/11/11	Date of Pressure Test (Year/Month/Day)
CONNECTION SERIES	ASME B16.5	Flange Series: dimensional pattern based on ASME B16.5 flange standards
PROCESS SERIES	25546	Pressure Tag Family Series
WETTED NON-METALLICS	TFM	Antenna Emitter
WETTED METALLICS	316L	Process Connection Material(s)
WETTED SEALS	FKM	Seal Material(s)

- Minimum Wetted Process Conditions: the minimum pressure and temperature to which the device assembly may be exposed in the process, and continue to provide a pressure-retaining function.
- Pressure Tag Family Series: the identification number used to indicate specific process connection information relating to operating conditions.
- For Flanged encapsulated antenna: this information is laser-etched on antenna body

BACK FACE	
Sample Text	Comments/Explanation
CRN 0Fxxxxx.5	Canadian Registration Number (CRN)

Appendix A: Technical reference

A

Note

Where a number follows the parameter name [for example, **Master Reset (4.1.)**] this is the parameter access number via the handheld programmer. See Parameter Reference (Page 127) for a complete list of parameters.

A.1 Principles of operation

SITRANS LR250 is a 2-wire 25 GHz pulse radar level transmitter for continuous monitoring of liquids and slurries. (The microwave output level is significantly less than that emitted from cellular phones.) Radar level measurement uses the time of flight principle to determine distance to a material surface. The device transmits a signal and waits for the return echo. The transit time is directly proportional to the distance from the material.

Pulse radar uses polarized electromagnetic waves. Microwave pulses are emitted from the antenna at a fixed repetition rate, and reflect off the interface between two materials with different dielectric constants (the atmosphere and the material being monitored).

Electromagnetic wave propagation is virtually unaffected by temperature or pressure changes, or by changes in the vapor levels inside a vessel. Electromagnetic waves are not attenuated by dust.

SITRANS LR250 consists of an enclosed electronic circuit coupled to an antenna and process connection. The electronic circuit generates a radar signal (25 GHz) that is directed to the antenna.

The signal is emitted from the antenna, and the reflected echoes are digitally converted to an echo profile. The profile is analyzed to determine the distance from the material surface to the sensor reference point. See Dimension drawings (Page 209). This distance is used as a basis for the display of material level and mA output.

A.2 Echo Processing

A.2.1 Process Intelligence

The signal processing technology embedded in Siemens radar level devices is known as **Process Intelligence**.

Process intelligence provides high measurement reliability regardless of the dynamically changing conditions within the vessel being monitored. The embedded Process Intelligence dynamically adjusts to the constantly changing material surfaces within these vessels.

Process Intelligence is able to differentiate between the true microwave reflections from the surface of the material and unwanted reflections being returned from obstructions such as seam welds or supports within a vessel. The result is repeatable, fast and reliable measurement. This technology was developed as result of field data gained over some twenty years from more than 1,000,000 installations in many industries around the world.

Higher order mathematical techniques and algorithms are used to provide intelligent processing of microwave reflection profiles. This "knowledge based" technique produces superior performance and reliability.

A.2.2 Echo Selection

Time Varying Threshold (TVT)

A Time Varying Threshold (TVT) hovers above the echo profile to screen out unwanted reflections (false echoes).

In most cases the material echo is the only one which rises above the default TVT.

In a vessel with obstructions, a false echo may occur. See Auto False Echo Suppression (Page 259) for more details.

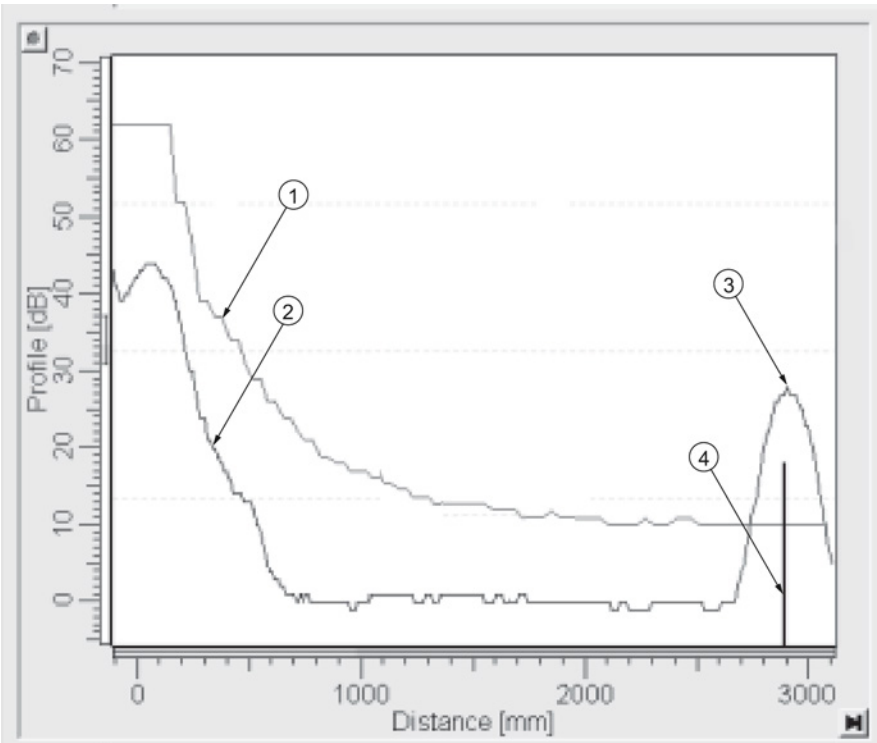

① default TVT
② echo profile
③ material level
④ echo marker

The device characterizes all echoes that rise above the TVT as potential good echoes. Each peak is assigned a rating based on its strength, area, height above the TVT, and reliability, amongst other characteristics.

Algorithm (2.8.4.1.)

The true echo is selected based on the setting for the Echo selection algorithm. Options are **t**rue **F**irst Echo, **L**argest Echo, or **b**est of **F**irst and **L**argest.

Position Detect (2.8.4.2.)

The echo position detection algorithm determines which point on the echo will be used to calculate the precise time of flight, and calculates the range using the calibrated propagation velocity (see **Propagation Factor (2.8.3.)** for values). There are three options:

- **Center**
- **Hybrid**
- **CLEF** (Constrained Leading Edge Fit)

Center

Uses center of the echo.

Hybrid

Uses the Center algorithm for the top part of the vessel, and the CLEF algorithm for the part nearest the vessel bottom, according to the setting for **CLEF range**.

CLEF (Constrained Leading Edge Fit)

- Uses the leading edge of the echo.
- Is used mainly to process the echo from materials with a low dK value.

In an almost empty flat-bottomed vessel, a low dK material may reflect an echo weaker than the echo from the vessel bottom. The echo profile shows these echoes merging. The device may then report a material level equal to or lower than empty.

The CLEF algorithm enables the device to report the level correctly.

Example: CLEF off: Position set to Hybrid

Vessel height: 1.5 m; CLEF range set to 0 (Center algorithm gives the same result.)

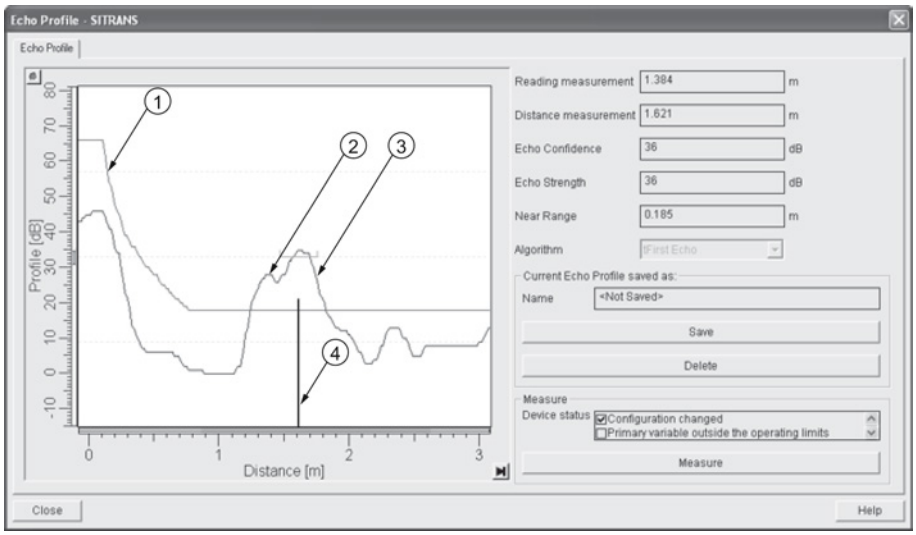

① default TVT
② material echo
③ vessel bottom echo selected
④ echo marker

Example: CLEF enabled

Vessel height: 1.5 m; CLEF range set to 0.5 m

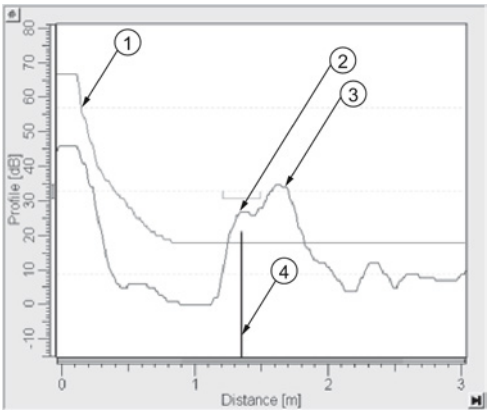

① default TVT
② material echo selected
③ vessel bottom echo
④ echo marker

A.2.3 CLEF Range

CLEF Range (2.8.4.4.) is referenced from Low Calibration Point (process empty level). When the **Hybrid** algorithm is selected in **Position Detect (2.8.4.2.)**, the CLEF algorithm will be applied up to the limit of CLEF Range. Above this limit the Center algorithm will be applied.

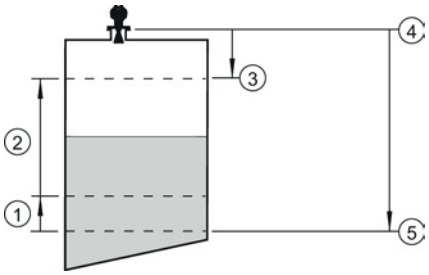

① CLEF Range
② (Center algorithm applied)
③ High Calibration Point (process full level)
④ Sensor reference point
⑤ Low Calibration Point (process empty level)

A.2.4 Echo Threshold

Confidence (2.8.6.1.) describes the quality of an echo. Higher values represent higher quality. **Echo Threshold (2.8.4.3.)** defines the minimum confidence value required for an echo to be accepted as valid and evaluated.

A.2.5 Echo Lock

If the echo selected by **Algorithm** is within the Echo Lock window, the window is centered about the echo, which is used to derive the measurement. In radar applications, two measurement verification options are used with **Echo Lock (2.8.5.1.)**:

Lock Off

SITRANS LR250 responds immediately to a new selected echo (within the restrictions set by the Maximum Fill / Empty Rate), but measurement reliability is affected.

Material Agitator

A new measurement outside the Echo Lock Window must meet the sampling criteria before the window will move to include it.
The other available options, **Maximum Verification** and **Total Lock** are not recommended for radar.

A.2.6 Auto False Echo Suppression

Note

- For detailed instructions on using this feature via PDM see Auto False Echo Suppression (Page 92).
- For detailed instructions on using this feature via the handheld programmer see **Auto False Echo Suppression (2.8.7.1.).**

Auto False Echo Suppression is designed to learn a specific environment (for example, a particular vessel with known obstructions), and in conjunction with Auto False Echo Suppression Range to remove false echoes appearing in front of the material echo.

The material level should be below all known obstructions at the moment when Auto False Echo Suppression learns the echo profile. Ideally the vessel should be empty or almost empty, and if an agitator is present, it should be running.

The device learns the echo profile over the whole measurement range and the TVT is shaped around all echoes present at that moment.

Auto False Echo Suppression Range (2.8.7.2.)

Auto False Echo Suppression Range specifies the range within which the learned TVT is applied. Default TVT is applied over the remainder of the range.

The learned TVT screens out the false echoes caused by obstructions. The default TVT allows the material echo to rise above it.

Auto False Echo Suppression Range must be set to a distance shorter than the distance to the material level when the environment was learned, to avoid the material echo being screened out.

Example before Auto False Echo Suppression

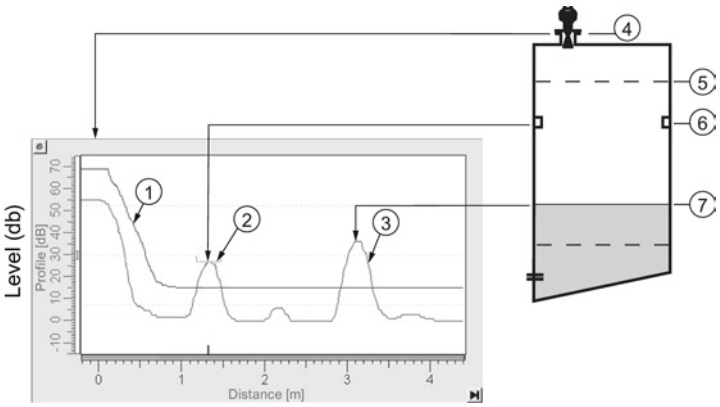

① default TVT
② false echo
③ material echo
④ sensor reference point
⑤ high calibration point = 0
⑥ obstruction at 1.3. m
⑦ material level at 3.2 m

Example after Auto False Echo Suppression

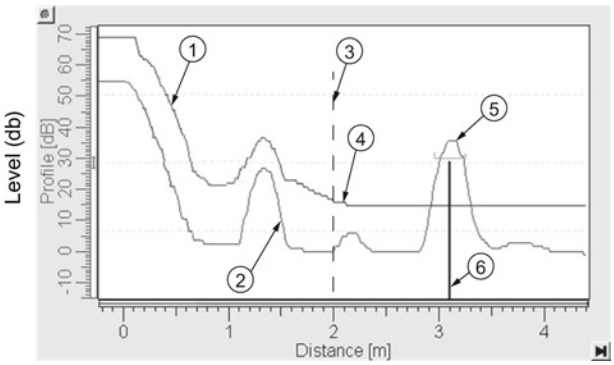

Auto False Echo Suppression Range set to 2 m

① learned TVT
② false echo
③ Auto False Echo Suppression Range
④ default TVT
⑤ material echo
⑥ echo marker

A.2.7 Measurement Range

Near Range (2.8.1.)

Near Range programs SITRANS LR250 to ignore the zone in front of the antenna. The default blanking distance is 50 mm (1.97") from the end of the antenna.

Near Range allows you to increase the blanking value from its factory default. But **Auto False Echo Suppression (2.8.7.1.)** is generally recommended in preference to extending the blanking distance from factory values.

Far Range (2.8.2.)

Far Range can be used in applications where the base of the vessel is conical or parabolic. A reliable echo may be available below the vessel empty distance, due to an indirect reflection path.

Increasing Far Range to 30% or 40% can provide stable empty vessel readings.

A.2.8 Measurement Response

Note

Units are defined in **Units (2.2.1.)** and are in meters by default.

Response Rate (2.4.1.) limits the maximum rate at which the display and output respond to changes in the measurement. There are three preset options: slow, medium, and fast.

Once the real process fill/empty rate (m/s by default) is established, a response rate can be selected that is slightly higher than the application rate. Response Rate automatically adjusts the filters that affect the output response rate.

Response Rate (2.4.1.)		Fill Rate per Minute (2.4.2.)/Empty Rate per Minute (2.4.3.)	Damping Filter (2.2.4.)
*	**Slow**	0.1 m/min (0.32 ft/min)	10 s
	Medium	1.0 m/min (3.28 ft.min)	10 s
	Fast	10.0 m/min (32.8 ft/min)	0 s

A.2.9 Damping

Damping Filter (2.2.4.) smooths out the response to a sudden change in level. This is an exponential filter and the engineering unit is always in seconds.

In 5 time constants the output rises exponentially: from 63.2% of the change in the first time constant, to almost 100% of the change by the end of the 5th time constant.

Damping example

time constant = 2 seconds
input (level) change = 2 m

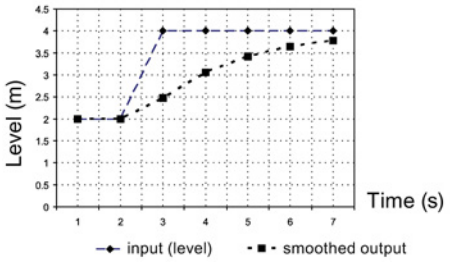

A.3 Analog Output

The mA Output (current output) is proportional to material level in the range 4 to 20 mA. 0% and 100% are percentages of the full-scale reading (m, cm, mm, ft, in). Typically mA output is set so that 4 mA equals 0% and 20 mA equals 100%.

When SITRANS LR250 is put into **PROGRAM** mode (for example, by navigating through the menu) it stops updating the output of the device (local user interface and mA Output). It stores the most recent measurement, and holds the associated readings and mA signal output. The device reverts to the parameter last addressed during the previous program session.

When the device is returned to **Measurement** mode, the transceiver resumes operation. The reading and mA output default to the last measurement taken. The reading and associated outputs migrate to the current process level at a rate controlled by **Response Rate (2.4.1.)**.

If the device is left in **PROGRAM** mode for 10 minutes without input, it automatically reverts to **Measurement** mode.

A.3.1 Sensor Mode

This parameter controls the input. Depending on the reference point used, the measurement reports either Level, Space, or Distance. By default Sensor Mode is set to **Level**.

Operation	Description	Reference point
NO SERVICE	Measurement and associated loop current not being updated. Device defaults to Fail-safe mode [a].	
LEVEL	Distance to material surface	Low Calibration Point (process empty level)
SPACE	Distance to material surface	High Calibration Point (process full level)
DISTANCE	Distance to material surface	Sensor reference point

[a] See Fail-safe Mode (Page 265).

You also have the option to put the device out of service, in which case the device defaults to Fail-safe mode, and the reported level depends on the device type. A standard device reports the last valid reading, and a NAMUR NE 43-compliant device reports the user-defined value for Material Level (3.58 mA by default).

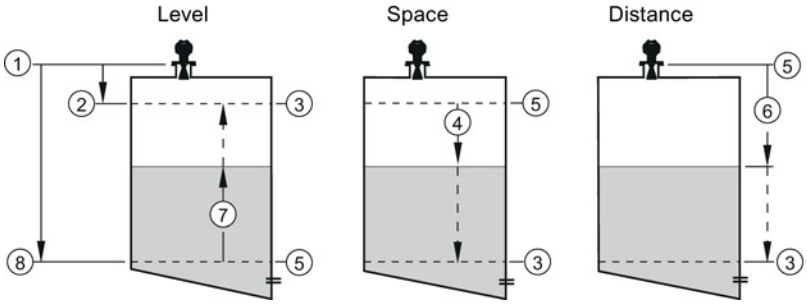

① Sensor reference point
② High calibration point
③ 20 mA 100%
④ Space
⑤ 4 mA 0%
⑥ Distance
⑦ Level
⑧ Low calibration point

A.3.2 Current Output Function

Current Output Function (2.6.1.) controls the mA output and applies any relevant scaling. By default it is set to **Level**. Other options are Space, Distance, and Volume. (The device can carry out a volume calculation only after a vessel shape has been specified.)

When a volume application type is chosen, Sensor Mode remains as **Level** and the mA Output is automatically converted to **Volume**.

To view the mA reading in the secondary region of the LCD, press 5 on the handheld programmer.

A.3.3 Loss of Echo (LOE)

A loss of echo (LOE) occurs when the calculated measurement is judged to be unreliable because the echo confidence value has dropped below the echo confidence threshold.

Confidence (2.8.6.1.) describes the quality of an echo. Higher values represent higher quality.

Echo Threshold (2.8.4.3.) defines the minimum confidence value required for an echo to be accepted as valid and evaluated.

If the LOE condition persists beyond the time limit set in **LOE Timer (2.5.2.)** the LCD displays the Service Required icon, and the text region displays the fault code **S: 0** and the text LOE.

If two faults are present at the same time, the fault code, error text, and error icon for each fault are displayed alternately. For example, Loss of Echo and Fail-safe.

S: 0 LOE S: 52 Fail-safe

A.3.4 Fail-safe Mode

The purpose of the Fail-safe setting is to put the process into a safe mode of operation in the event of a fault or failure. The value to be reported in the event of a fault is selected so that a loss of power or loss of signal triggers the same response as an unsafe level.

LOE Timer (2.5.2.) determines the length of time a **Loss of Echo (LOE)** condition will persist before a Fail-safe state is activated. The default setting is 100 seconds.

Material Level (2.5.1.) determines the material level to be reported when **LOE Timer (2.5.2.)** expires, depending on the device type (standard or NAMUR NE 43-compliant.)

STANDARD DEVICE			
Options		**HI**	**20.5** mA (max. mA Limit)
		LO	**3.8** mA (min. mA Limit)
	*	**HOLD**	Last valid reading
		VALUE	User-selected value defined in **Fail-Safe mA Value (2.5.3.)**

NAMUR NE 43-COMPLIANT DEVICE			
Options		**HI**	**20.5** mA (max. mA Limit)
		LO	**3.8** mA (min. mA Limit)
		HOLD	Last valid reading
	*	**VALUE**	User-selected value **Fail-Safe mA Value (2.5.3.)**, default 3.58 mA

Upon receiving a reliable echo, the loss of echo condition is aborted, the Service Required icon and error message are cleared, and the reading and mA output return to the current material level.

A.4 Maximum Process Temperature Chart

WARNING

Exceeded maximum internal and process temperatures

Danger of device malfunction

- Internal temperature must not exceed +80 ° C (+176 °F).
- Process temperature must not exceed limits specified by the antenna type.

Note

- The chart below is for guidance only.
- The chart does not represent every possible process connection arrangement. For example, it will NOT apply if you are mounting SITRANS LR250 directly on a metallic vessel surface.
- The chart does not take into consideration heating from direct sunlight exposure.

Maximum Process Temperatures versus allowable ambient

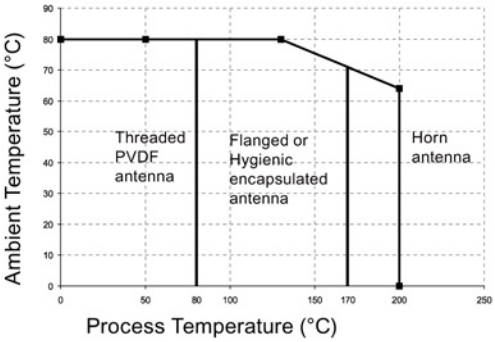

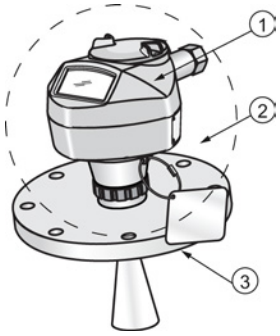

① Internal enclosure temperature

② Ambient temperature

③ Process temperature (at process connection)

Where the chart does not apply, please use your own judgement regarding the use of SITRANS LR250.

If the internal temperature exceeds the maximum allowable limit, a sun shield or a longer nozzle may be required.

See **Current Internal Temperature (3.2.1.)** to monitor the Internal Temperature.

A.5 Process Pressure/Temperature derating curves

WARNING

Exceeded maximum permissible operating pressure

Danger of injury or poisoning.

The maximum permissible operating pressure depends on the device version. The device can be damaged if the operating pressure is exceeded. Hot, toxic and corrosive process media could be released.

- Make sure that the device is suitable for the maximum permissible operating pressure of your system.

DANGER

Pressure applications

Danger to personnel, system and environment will result from improper disassembly.

- Never attempt to loosen, remove, or disassemble process connection while vessel contents are under pressure.

WARNING

Pressure applications

Danger to personnel, system and environment can result from improper installation.

- Improper installation may result in loss of process pressure.

WARNING

Unsuitable connecting parts

Danger of injury or poisoning.

In case of improper mounting hot, toxic and corrosive process media could be released at the connections.

- Ensure that connecting parts (such as flange gaskets and bolts) are suitable for connection and process media.

Note

Material compatibility

Siemens can provide you with support concerning selection of sensor components wetted by process media. However, you are responsible for the selection of components. Siemens accepts no liability for faults or failures resulting from incompatible materials.

A.5.1 Pressure Equipment Directive, PED, 97/23/EC

Siemens Level Transmitters with flanged, threaded, or sanitary clamp type process mounts have no pressure-bearing housing of their own and, therefore, do not come under the Pressure Equipment Directive as pressure or safety accessories (see EU Commission Guideline 1/8 and 1/20).

A.5.2 Horn antenna

1.5", 2" and 3" [NPT, G (BSPP), R (BSPT)] Threaded Versions

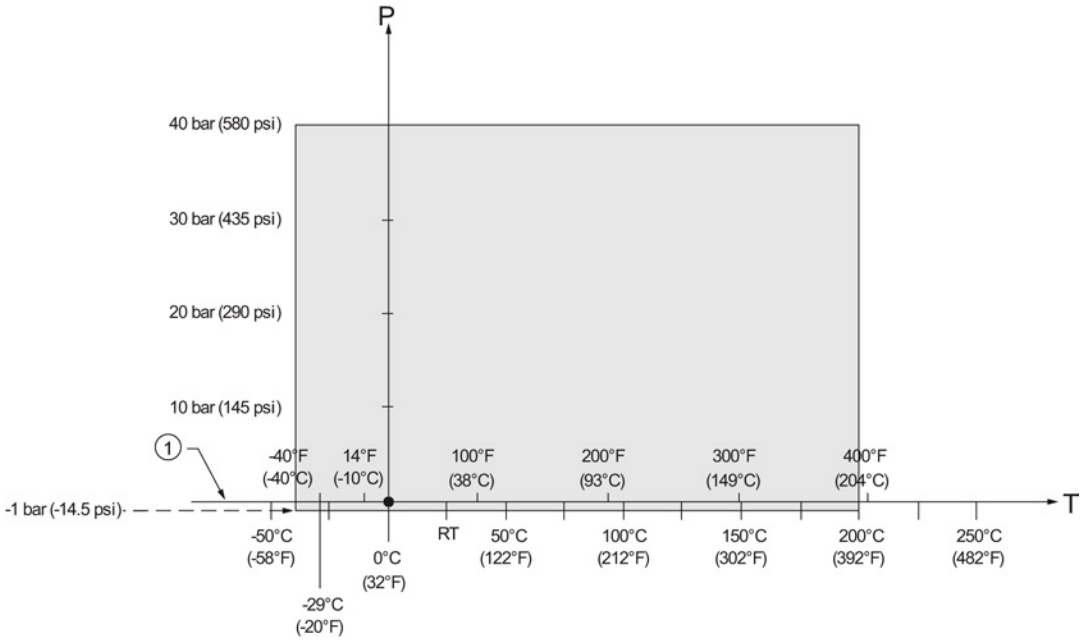

①	Atmospheric
P	Allowable operating pressures
T	Allowable operating temperatures

A.5.3 Flanged horn antenna

JIS B 2220, 10K: 50A, 80A, and 100A

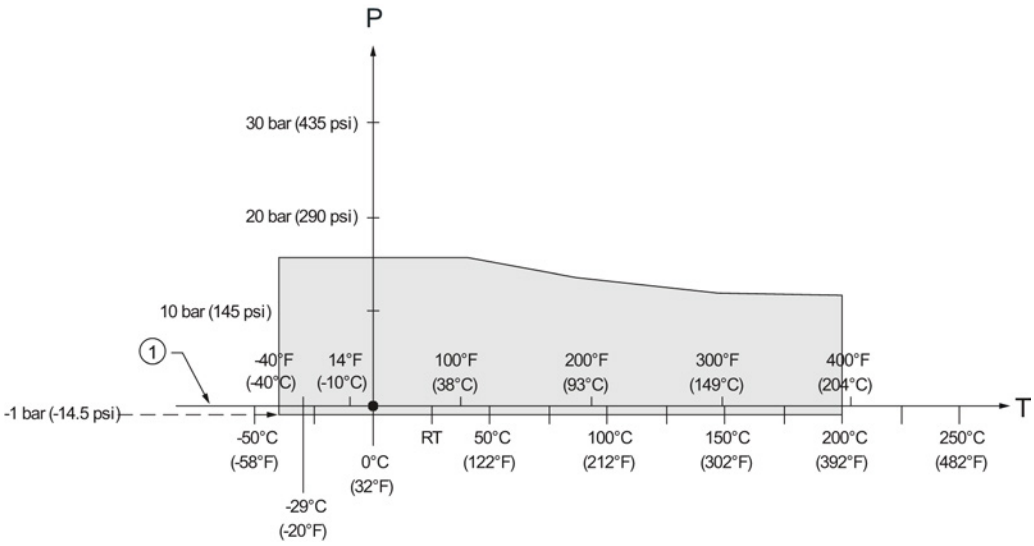

①	Atmospheric
P	Allowable operating pressures
T	Allowable operating temperatures

EN1092-1, PN16: DN50, DN80, DN100, and DN150

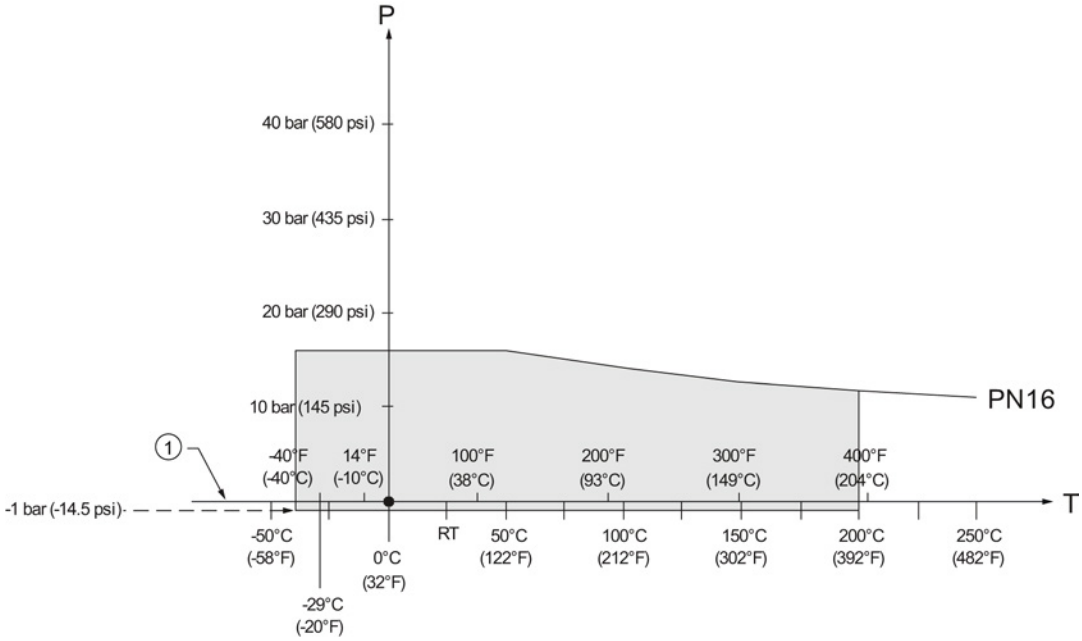

①	Atmospheric
P	Allowable operating pressures
T	Allowable operating temperatures

EN1092-1, PN40: DN50, DN80, DN100, and DN150

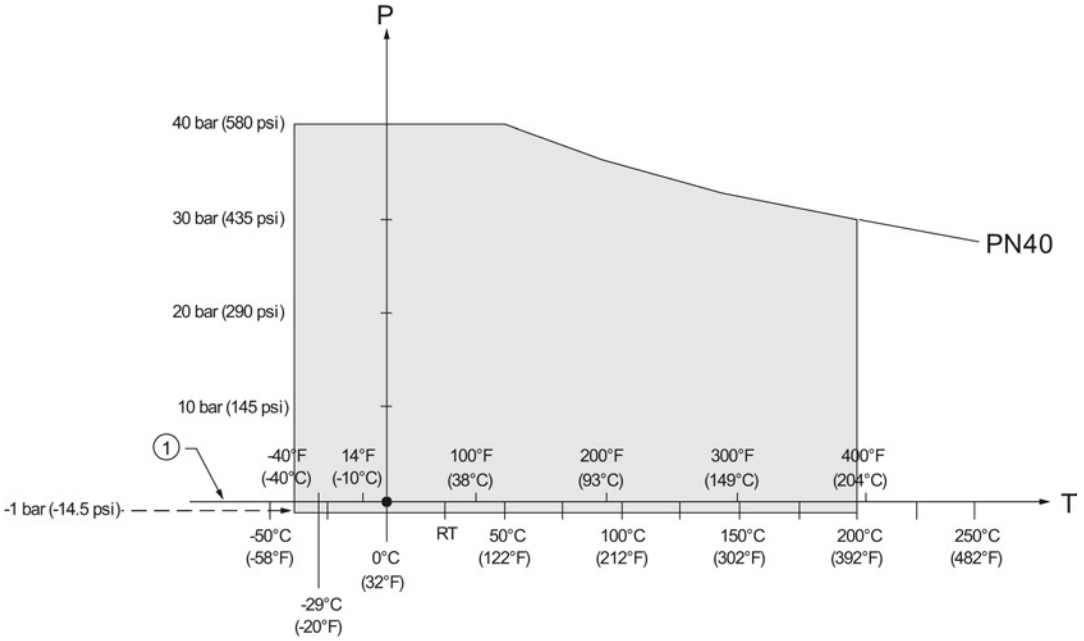

① Atmospheric

P Allowable operating pressures

T Allowable operating temperatures

ASME B16.5, Class 150: 2", 3", and 4" NPS

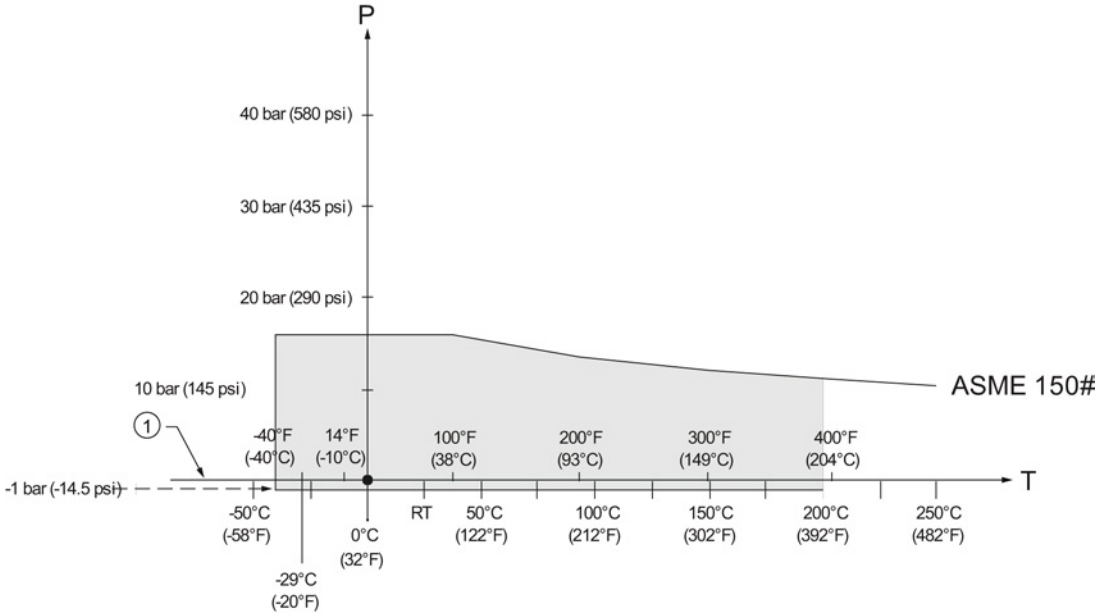

① Atmospheric

P Allowable operating pressures

T Allowable operating temperatures

ASME B16.5, Class 300: 2", 3", and 4" NPS

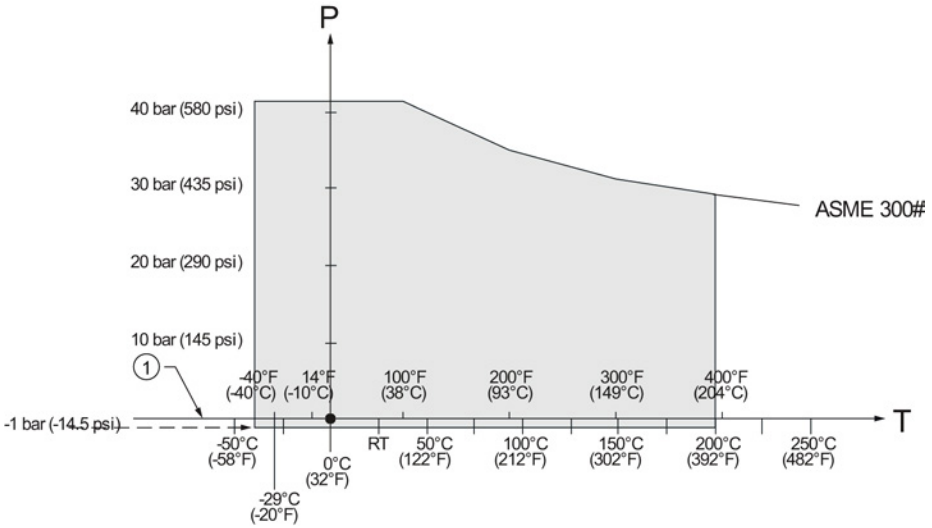

①	Atmospheric
P	Allowable operating pressures
T	Allowable operating temperatures

A.5.4 Flanged encapsulated antenna

ASME B16.5, Class 150: 2", 3", 4", and 6" NPS

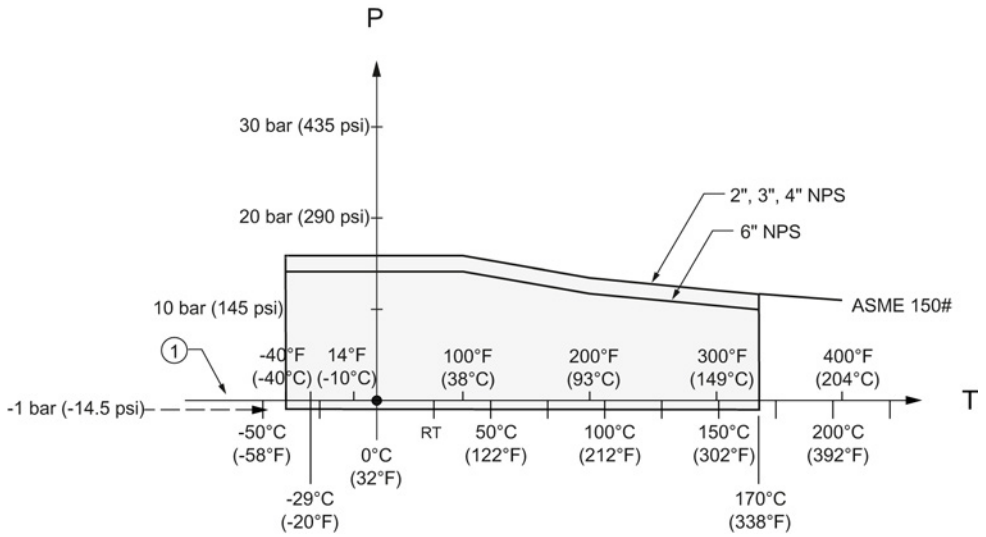

① Atmospheric

P Allowable operating pressures

T Allowable operating temperatures

JIS B 2220, 10K: 50A, 80A, 100A, and 150A

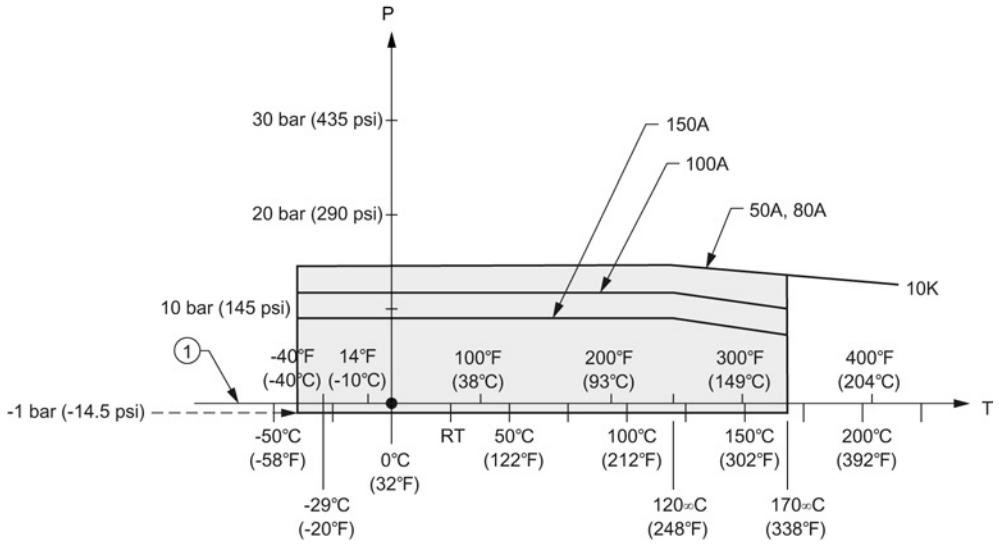

① Atmospheric

P Allowable operating pressures

T Allowable operating temperatures

EN1092-1, PN10/16: DN50, DN80, DN100, and DN150

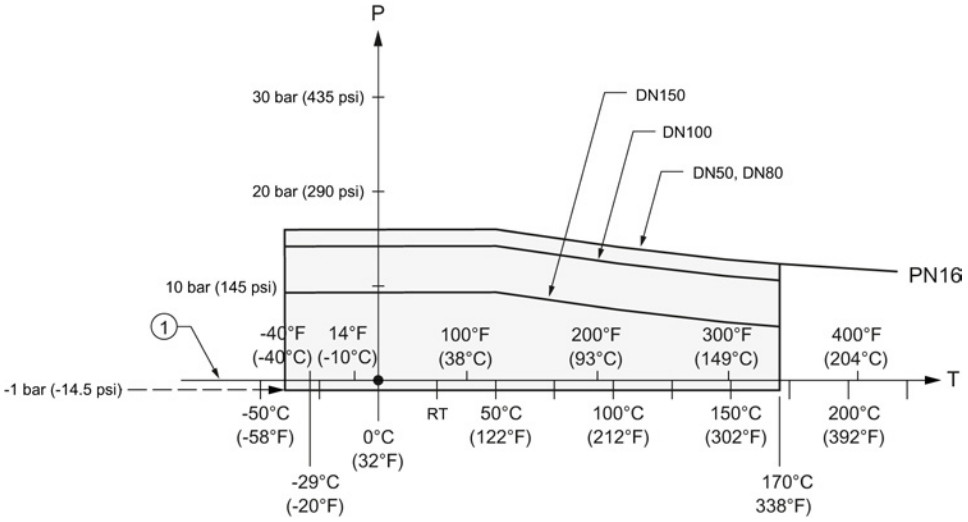

① Atmospheric

P Allowable operating pressures

T Allowable operating temperatures

A.5.5 PVDF antenna

ASME B1.20.1 2" NPT, EN ISO 228-1 2" G (BSPP), EN 10226-1 2" R (BSPT)

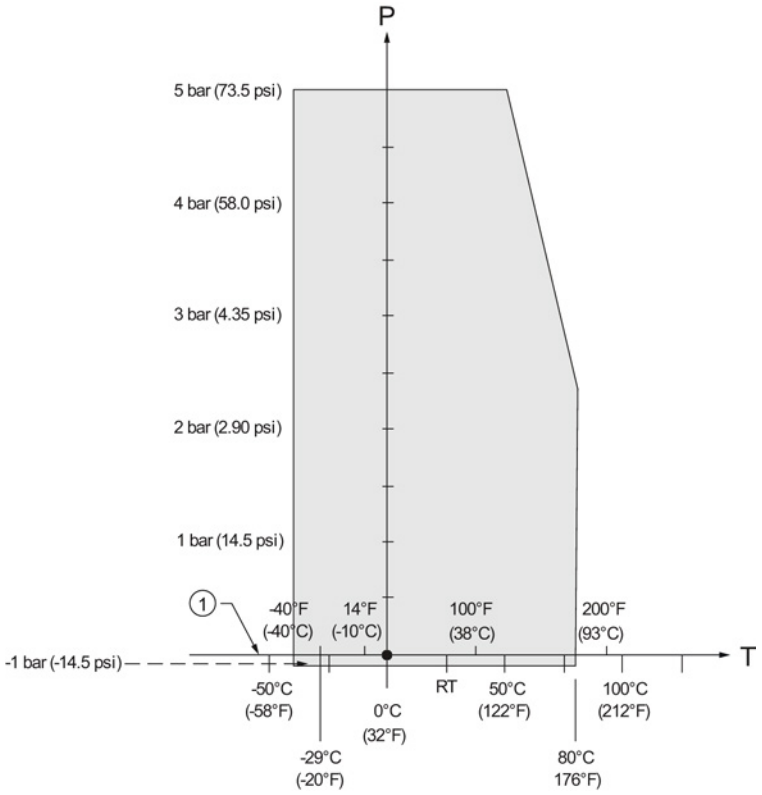

① Atmospheric

P Allowable operating pressures

T Allowable operating temperatures

A.5.6 Hygienic encapsulated antenna

DIN 11851 Sanitary/Hygienic nozzle/slotted nut: DN50, DN80, and DN100

DIN 11864-1 Aseptic/Hygienic nozzle/slotted nut: DN50, DN80, and DN100

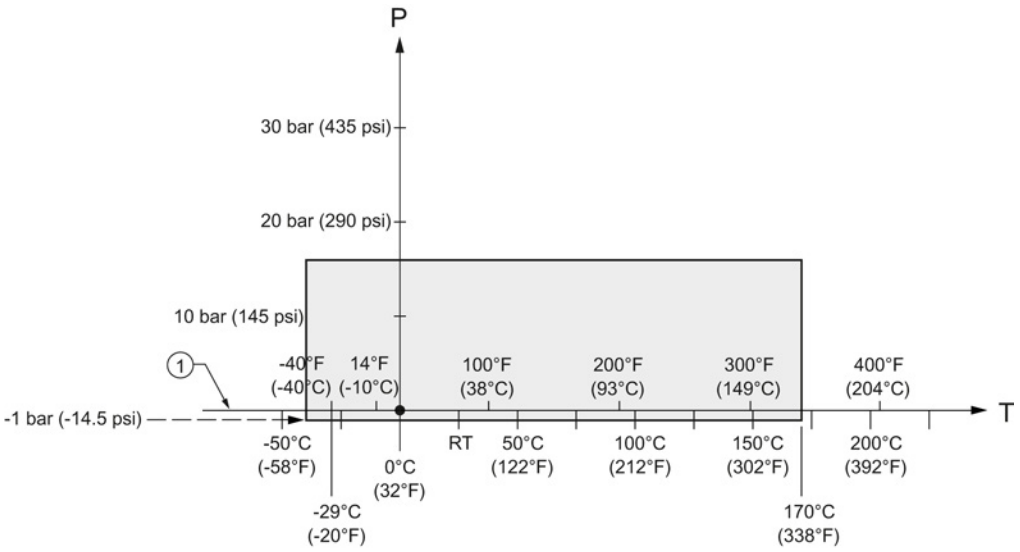

①	Atmospheric
P	Allowable operating pressures
T	Allowable operating temperatures

DIN 11864-2 Aseptic/Hygienic flanged: DN50, DN80, and DN100

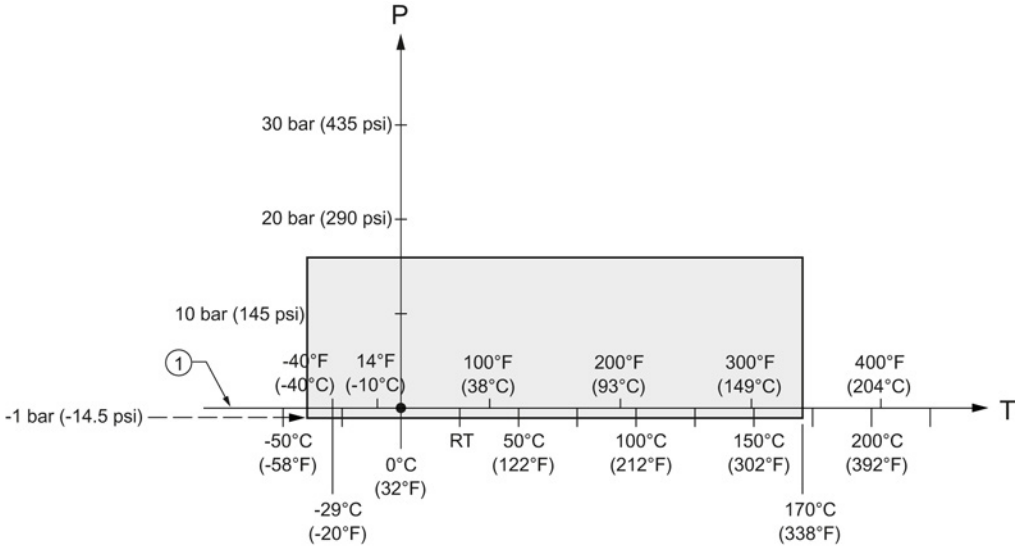

① Atmospheric

P Allowable operating pressures

T Allowable operating temperatures

Note

For pressure applications, all attachment hardware must be suitably rated.

DIN 11864-3 Aseptic/Hygienic clamp: DN50, DN80, and DN100

IS0 2852 Sanitary/Hygienic clamp: 2", 3", and 4"

Tuchenhagen Varivent face seal clamp: Type N (68 mm) and Type F (50 mm)

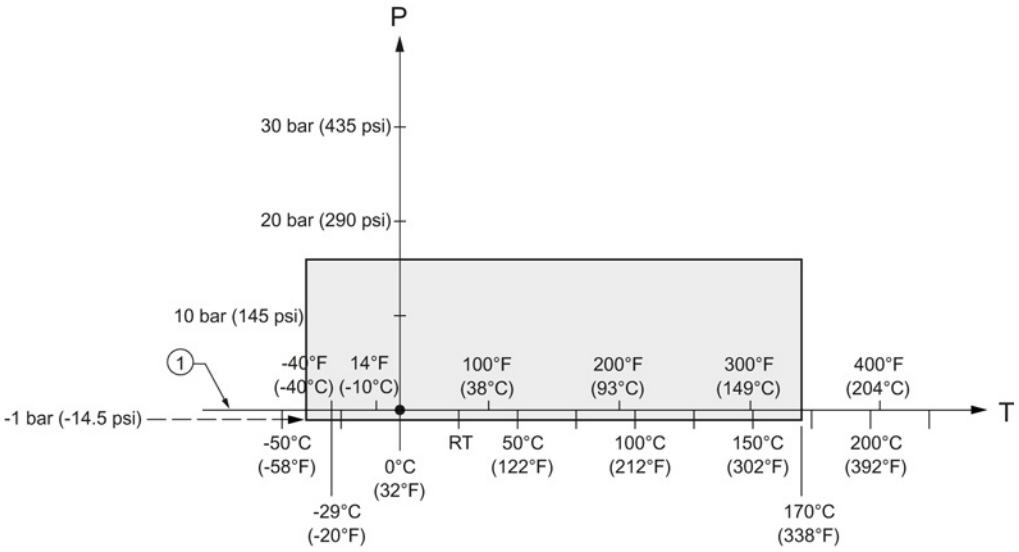

①	Atmospheric
P	Allowable operating pressures
T	Allowable operating temperatures

Note

For pressure applications, all clamps must be rated accordingly.

A.6 Loop power

Note

Loop voltage is the voltage at the terminals of the power supply (not the voltage at the terminals of the device).

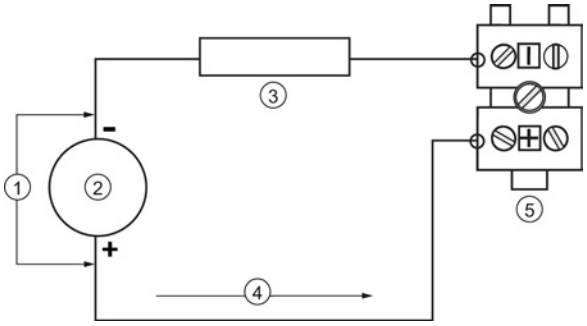

① Loop voltage VL
② Power supply
③ Loop resistance RL
④ Loop current IL
⑤ LR250

A.6.1 Allowable operating area of SITRANS LR250

Note

The curves below apply to a standalone device, configured via the Siemens handheld programmer.

A.6.2 Curve 1 (General Purpose, Intrinsically Safe, Non-Sparking, Non-incendive)

Loop Voltage versus Loop Resistance

Note

When using HART communications, the minimum voltage with 220 Ohms (RL) is 16.3 V DC.

A.6.3 Curve 2 (Flameproof, Increased Safety, Explosion-proof)

Loop Voltage versus Loop Resistance

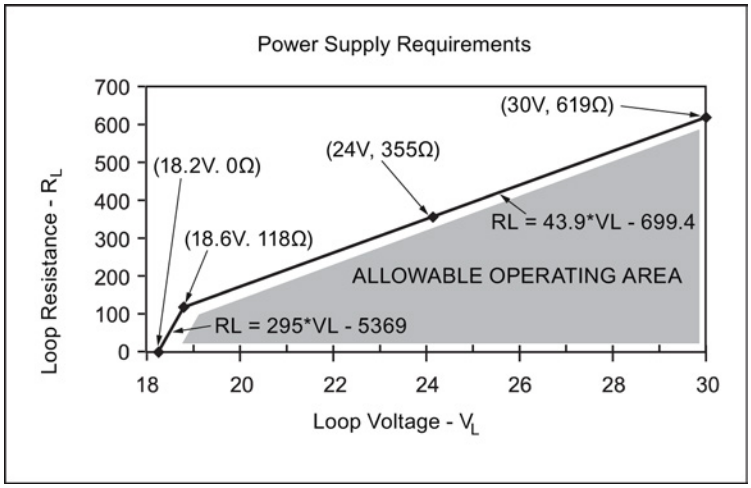

Note

When using HART communications, the minimum voltage with 220 Ohms (RL) is 20.94 V DC.

A.7 Startup behavior

- The device draws less than 3.6 mA at startup.
- Time to first measurement is less than 50 seconds.

Appendix B: HART communications

B

Highway Addressable Remote Transducer, HART, is an industrial protocol that is superimposed on the 4-20 mA signal. It is an open standard, and full details about HART can be obtained from the HART Communication Foundation website:

HART Communication Foundation (http://www.hartcomm.org/)

The radar device can be configured over the HART network using either the HART Communicator 375 by Fisher-Rosemount, or a software package. The recommended software package is the SIMATIC Process Device Manager (PDM) by Siemens.

B.1 SIMATIC PDM

This software package is designed to permit easy configuration, monitoring, and troubleshooting of HART devices. The HART EDD for this device was written with SIMATIC PDM in mind and has been extensively tested with this software. For more information, see Operating via SIMATIC PDM (Page 77).

B.2 HART Electronic Device Description (EDD)

In order to configure a HART device, the configuration software requires the HART Electronic Device Description for the instrument in question.

You can download the HART EDD for this device from our website:

Product page (http://www.siemens.com/LR250)

Click on **Support>Software Downloads.** Older versions of the library will have to be updated in order to use all the features of this device.

B.3 HART Handheld 375/475

If the SITRANS LR250 HART device revision is higher than revision 2, the FC375 will report that the Device Description is not installed and will ask whether you wish to proceed in forward compatibility mode. It is recommended to choose YES in order to use revision 3 with the FC375.

B.4 HART Communicator 375 menu structure

Note

HART Communicator 375 is supported by SITRANS LR250 HART.

LEVEL METER

- **1. IDENTIFICATION**
  - 1. TAG
  - 2. DESCRIPTION
  - 3. MESSAGE
  - 4. INSTALLATION DATE
  - 5. DEVICE ORDER NUMBER
- **2. SETUP**
  - 1. DEVICE
    - 1. FIRMWARE REVISION
    - 2. LOADER REVISION
    - 3. HARDWARE REVISION
  - 2. INPUT
    - 1. SENSOR CALIBRATION
      - 1. MATERIAL
      - 2. SENSOR UNITS
      - 3. OPERATION
      - 4. LOW CALIBRATION PT.
      - 5. HIGH CALIBRATION PT.
      - 6. NEAR RANGE
      - 7. FAR RANGE
      - 8. PROPAG. FACTOR
      - 9. SENSOR OFFSET
    - 2. VOLUME CONVERSION
      - 1. VESSEL SHAPE
      - 2. MAXIMUM VOLUME
      - 3. DIMENSION A
      - 4. DIMENSION L
    - 3. VOLUME BREAKPOINT
      - 1. TABLE 1 - 8 (Lev./Vol. Breakpoints 1-8)
      - 2. TABLE 9 - 16 (Lev./Vol. Breakpoints 9-16)
      - 3. TABLE 17 - 24 (Lev./Vol. Breakpoints 17-24)
      - 4. TABLE 25 - 32 (Lev./Vol. Breakpoints 25-32)
    - 4. ECHO PROCESSING
      - 1. ECHO SELECT
        - 1. ALGORITHM
        - 2. POSITION DETECT
        - 3. ECHO THRESHOLD
      - 2. SAMPLING
        - 1. ECHO LOCK
        - 2. SAMPLING UP
        - 3. SAMPLING DOWN
      - 3. FILTERING
        - 1. DAMPING FILTER
      - 4. TANK BOTTOM ALGORITHM
        - 1. CLEF RANGE
      - 5. NOISE
        - 1. ECHO CONFIDENCE
        - 2. ECHO STRENGTH
        - 3. NOISE AVERAGE

5. TVT SETUP
    1. TVT HOVER LEVEL
    2. AUTO FALSE ECHO SUPPRESSION
    3. AUTO SUPPRESSION RANGE
    4. SHAPER MODE
6. TVT SHAPER
    1. SHAPER 1-9 (Shaper points 1-9)
    2. SHAPER 10-18 (Shaper points 10-18)
    3. SHAPER 19-27 (Shaper points 19-27)
    4. SHAPER 28-36 (Shaper points 28-36)
    5. SHAPER 37-40 (Shaper points 37-40)
7. RATE
    1. RESPONSE RATE
    2. FILL RATE PER MINUTE
    3. EMPTY RATE PER MINUTE

3. OUTPUT
1. MA OUTPUT
    1. MA OUTPUT FUNCTION
    2. 4 MA SETPOINT
    3. 20 MA SETPOINT
    4. MINIMUM MA LIMIT
    5. MAXIMUM MA LIMIT

4. FAIL-SAFE
1. FAILSAFE TIMER
2. FAILSAFE MATERIAL LEVEL
3. FAILSAFE LEVEL

3. DIAGNOSTICS

1. MEASURED VALUES
    1. CURRENT INTERNAL TEMP.
    2. MAX. INTERNAL TEMP.
    3. MIN. INTERNAL TEMP.

4. SERVICE

1. REMAINING DEVICE LIFETIME
    1. TOTAL EXPECTED DEVICE LIFE
    2. TOTAL DEVICE OPERATING TIME
    3. REMAINING DEVICE LIFETIME
    4. MAINTENANCE REQUIRED LIFETIME
    5. MAINTENANCE DEMANDED LIFETIME
    6. MAINTENANCE ALERT ACTIVATION
    7. DEVICE LIFETIME MAINTENANCE ACKNOWLEDGE
2. REMAINING SENSOR LIFETIME
    1. TOTAL EXPECTED SENSOR LIFE
    2. TOTAL SENSOR OPERATING TIME
    3. REMAINING SENSOR LIFETIME
    4. MAINTENANCE REQUIRED LIMIT
    5. MAINTENANCE DEMANDED LIMIT
    6. MAINTENANCE ALERT ACTIVATION
    7. SENSOR LIFETIME MAINTENANCE ACKOWLEDGE

3. SERVICE INTERVAL
    1. TOTAL SERVICE INTERVAL
    2. TIME ELAPSED SINCE LAST SERVICE
    3. REMAINING LIFETIME
    4. MAINTENANCE REQUIRED LIMIT
    5. MAINTENANCE DEMANDED LIMIT
    6. MAINTENANCE ALERT ACTIVATION
    7. SERVICE ACKNOWLEDGE
4. CALIBRATION INTERVAL
    1. TOTAL CALIBRATION INTERVAL
    2. TIME ELAPSED SINCE LAST CALIBRATION
    3. REMAINING LIFETIME
    4. MAINTENANCE REQUIRED LIMIT
    5. MAINTENANCE DEMANDED LIMIT
    6. MAINTENANCE ALERT ACTIVATION
    7. CALIBRATION ACKNOWLEDGE
5. POWERED DAYS
6. POWER ON RESETS
7. LCD FAST MODE
8. LCD CONTRAST

5. COMMUNICATION
1. COMMUNICATION CONTROL

6. SECURITY
1. WRITE PROTECT
2. PIN TO UNLOCK

7. LANGUAGE
1. LANGUAGE

B.5 HART version

SITRANS LR250 conforms to HART rev. 5.

B.5.1 Burst Mode

SITRANS LR250 does not support burst mode.

B.5.2 HART Multidrop Mode

We do not recommend the use of HART Multidrop Mode.

Appendix C: Certificates and support

C

C.1 Certificates

Certificates can be downloaded from our website at:

Product page (http://www.siemens.com/LR250).

C.2 Technical support

If you have any technical questions about the device described in these Operating Instructions and do not find the right answers, you can contact Customer Support:

- Via the Internet using the **Support Request:**
  Support request (http://www.siemens.com/automation/support-request)
- Via Phone:
  - Europe: +49 (0)911 895 7222
  - America: +1 423 262 5710
  - Asia-Pacific: +86 10 6475 7575

Further information about our technical support is available on the Internet at
Technical support (http://support.automation.siemens.com/WW/view/en/16604318)

Service & Support on the Internet

In addition to our documentation, we offer a comprehensive knowledge base online on the Internet at:

Service & Support (http://www.siemens.com/automation/service&support)

There you will find:

- The latest product information, FAQs, downloads, tips and tricks.
- Our newsletter, providing you with the latest information about your products.
- Our bulletin board, where users and specialists share their knowledge worldwide.
- You can find your local contact partner for Industry Automation and Drives Technologies in our partner database.
- Information about field service, repairs, spare parts and lots more under "Services."

Additional Support

Please contact your local Siemens representative and offices if you have additional questions about the device

Find your contact partner at:

Local contact person (http://www.siemens.com/automation/partner)

List of abbreviations

13

Short form	Long form	Description	Units
3-A	3-A Sanitary Standards, Inc.		
CE / FM / CSA	Conformité Européene / Factory Mutual / Canadian Standards Association	safety approval	
C_i	Internal capacitance		F
D/A	Dialog to analog		
DCS	Distributed Control System	control room apparatus	
dK	dielectric constant		
EDD	Electronic Device Description		
EHEDG	European Hygienic Engineering Design Group		
FEA	Flanged encapsulated antenna		
FDA	Food and Drug Administration		
HEA	Hygienic Encapsulated Antenna		
HART	Highway Addressable Remote Transducer		
I_i	Input current		mA
I_o	Output current		mA
IS	Intrinsically Safe	safety approval	
L_i	Internal inductance		mH
mH	milliHenry	10^{-3}	H
µF	microFarad	10^{-6}	F
µs	microsecond	10^{-6}	s
NPS	Nominal Pipe Size		
PED	Pressure Equipment Directive	safety approval	
pF	pico Farads	10^{-12}	F
ppm	parts per million		
PV	Primary Variable	measured value	
PVDF	Polyvinylidene fluoride		
SV	Secondary Variable	equivalent value	
TB	Transducer Block		
TVT	Time Varying Threshold	sensitivity threshold	
TFM1600 PTFE	Modified PTFE	polytetrafluoroethylene with perfluoropropyl vinyl ether (PPVE) modifier	
U_i	Input voltage		V
U_o	Output voltage		V

LCD menu structure

14

14.1 LCD menu structure

Note

- In Navigation mode, **ARROW keys (◄ ▲ ► ▼)** navigate the menu in the direction of the arrow. See Parameter Reference (Page 127) for detailed information and instructions.

LEVEL METER

- **1. QUICK START WIZ**
  - 1.1 QUICK START
    - MATERIAL
    - RESPONSE RATE
    - UNITS
    - OPERATION
    - LOW CALIB. PT.
    - HIGH CALIB. PT.
    - WIZARD COMPLETE
- **1. SETUP**
  - 2.1 DEVICE
    - 2.1.1 HARDWARE REV
    - 2.1.2 FIRMWARE REV
    - 2.1.3 LOADER REV
    - 2.1.4 ORDER OPTION
  - 2.2 SENSOR
    - 2.2.1 UNITS
    - 2.2.2 SENSOR MODE
    - 2.2.3 MATERIAL
    - 2.2.4 DAMPING FILTER
  - 2.3 CALIBRATION
    - 2.3.1 LOW CALIB. PT.
    - 2.3.2 HIGH CALIB. PT.
    - 2.3.3 SENSOR OFFSET
  - 2.4 RATE
    - 2.4.1 RESPONSE RATE
    - 2.4.2 FILL RATE PER MINUTE
    - 2.4.3 EMPTY RATE PER MINUTE
  - 2.5 FAIL-SAFE
    - 2.5.1 MAT. LEV.
    - 2.5.2 LOE TIMER
    - 2.5.3 FAIL-SAFE MA VALUE
  - 2.6 ANALOG OUT. SCAL.
    - 2.6.1 CURR. OUT. FUNC.
    - 2.6.2 4 MA SETPOINT
    - 2.6.3 20 MA SETPOINT
    - 2.6.4 MIN. MA LIMIT
    - 2.6.5 MAX. MA LIMIT
    - 2.6.6 MA OUTPUT VALUE
  - 2.7 LINEARIZATION
    - 2.7.1 VOLUME
      - 2.7.1.1 VESSEL SHAPE
      - 2.7.1.2 MAX. VOLUME
      - 2.7.1.3 DIMENS. A
      - 2.7.1.4 DIMENS. L
    - 2.7.2 TABLE 1 - 8
    - 2.7.3 TABLE 9 - 16
    - 2.7.4 TABLE 17 - 24
    - 2.7.5 TABLE 25-32

- **2. SETUP (cont'd)**
  - 2.8 SIGNAL PROC.
    - 2.8.1 NEAR RANGE
    - 2.8.2 FAR RANGE
    - 2.8.3 PROPAG. FACTOR
    - 2.8.4 ECHO SELECT
      - 2.8.4.1 ALGORITHM
      - 2.8.4.2 POS. DETECT
      - 2.8.4.3 ECHO THRESHOLD
      - 2.8.4.4 CLEF RANGE
    - 2.8.5 SAMPLING
      - 2.8.5.1 ECHO LOCK
      - 2.8.5.2 UP SAMP.
      - 2.8.5.3 DOWN SAMP.
    - 2.8.6 ECHO QUALITY
      - 2.8.6.1 CONFIDENCE
      - 2.8.6.2 ECHO STRENGTH
      - 2.8.6.3 NOISE AVERAGE
    - 2.8.7 TVT SETUP
      - 2.8.7.1 AUTO FALSE ECHO
      - 2.8.7.2 AUTO SUPP RANGE
      - 2.8.7.3 HOVER LEVEL
      - 2.8.7.4 SHAPER MODE
    - 2.8.8 TVT SHAPER
      - 2.8.8.1 BRKPT. 1-9
      - 2.8.8.2 BRKPT. 10-18
      - 2.8.8.3 BRKPT. 19-27
      - 2.8.8.4 BRKPT. 28-36
      - 2.8.8.5 BRKPT. 37-40
    - 2.8.9 MEAS. VALUES
      - 2.8.9.1 LEVEL MEAS.
      - 2.8.9.2 SPACE MEAS.
      - 2.8.9.3 DISTANCE MEAS.
      - 2.8.9.4 VOLUME MEAS.
- **3. DIAGNOSTICS**
  - 3.1 ECHO PROFILE
  - 3.2 ELECT. TEMP.
    - 3.2.1 CURR. INTERN. TEMP..
    - 3.2.2 HIGHEST VALUE.
    - 3.2.3 LOWEST VALUE.
- **4. SERVICE**
  - 4.1 MASTER RESET
  - 4.2 REMAIN. DEV. LIFE
    - 4.2.1 LIFETIME EXPECTE..
    - 4.2.2 TIME IN OPER..
    - 4.2.3 REMAIN. LIFETIM..
    - 4.2.4 REMINDER ACTIV.
    - 4.2.5 REMIND. 1 (REQ)
    - 4.2.6 REMIND. 2 (DEM)
    - 4.2.7 MAINT STAT
    - 4.2.8 ACK STATUS
    - 4.2.9 ACK
  - 4.3 REMAIN. SENS. LIFE
    - 4.3.1 LIFETIME EXPECTE..
    - 4.3.2 TIME IN OPER..
    - 4.3.3 REMAIN. LIFETIM..
    - 4.3.4 REMINDER ACTIV.
    - 4.3.5 REMIND. 1 (REQ)
    - 4.3.6 REMIND. 2 (DEM)
    - 4.3.7 MAINT STAT
    - 4.3.8 ACK STATUS
    - 4.3.9 ACK

- **4. SERVICE (cont'd)**
  - 4.4 SERVICE SCHED.
    - 4.4.1 SERV. INTERVAL
    - 4.4.2 TIME LAST SERV.
    - 4.4.3 TIME NEXT SERV.
    - 4.4.4 REMINDER ACTIV.
    - 4.4.5 REMIND. 1 (REQ)
    - 4.4.6 REMIND. 2 (DEM)
    - 4.4.7 MAINT STAT
    - 4.4.8 ACK STATUS
    - 4.4.9 ACK
  - 4.5 CALIB SCHED.
    - 4.5.1 CALIB. INTERNAL
    - 4.5.2 TIME LAST CALIB.
    - 4.5.3 TIME NEXT CALIB.
    - 4.5.4 REMINDER ACTIV.
    - 4.5.5 REMIND. 1 (REQ)
    - 4.5.6 REMIND. 2 (DEM)
    - 4.5.7 MAINT STAT
    - 4.5.8 ACK STATUS
    - 4.5.9 ACK
  - 4.6 MANUF. DATE
  - 4.7 POWERED HOURS
  - 4.8 POWERON RESETS
  - 4.9 LCD FAST MODE
  - 4.10 LCD CONTRAST
  - 4.11 SECONDARY VALUE
  - 4.12 MEM. TEST
- **5. COMMUNICATION**
  - 5.1 DEVICE ADDRESS
- **6. SECURITY**
  - 6.1 REMOTE ACCESS
    - 6.1.1 ACCESS CONTROL
  - 6.2 LOCAL ACCESS
    - 6.2.1 WRITE PROTECT
    - 6.2.2 PIN TO UNLOCK
- **7. LANGUAGE**

Glossary

accuracy

degree of conformity of a measure to a standard or a true value.

algorithm

a prescribed set of well-defined rules or processes for the solution of a problem in a finite number of steps.

ambient temperature

the temperature of the surrounding air that comes in contact with the enclosure of the device.

antenna

an aerial which sends out and receives a signal in a specific direction. There are four basic types of antenna in radar level measurement, horn, parabolic, rod, and waveguide.

attenuation

a term used to denote a decrease in signal magnitude in transmission from one point to another. Attenuation may be expressed as a scalar ratio of the input magnitude to the output magnitude or in decibels.

Auto False-Echo Suppression

a technique used to adjust the level of a TVT to avoid the reading of false echoes. (See TVT.)

Auto-False Echo Suppression Distance

defines the endpoint of the TVT distance. (See TVT.) This is used in conjunction with auto false echo suppression.

beam spreading

the divergence of a beam as it travels through a medium.

beam width

the angle diametrically subtended by the one-half power limits (-3 dB) of the microwave beam.

blanking

a blind zone extending away from the reference point plus any additional shield length.The device is programmed to ignore this zone.

capacitance

the property of a system of conductors and dielectrics that permits the storage of electricity when potential differences exist between the conductors. Its value is expressed as the ratio of a quantity of electricity to a potential difference, and the unit is a Farad.

confidence

see Echo Confidence.

damping

term applied to the performance of a device to denote the manner in which the measurement settles to its steady indication after a change in the value of the level.

dB (decibel)

a unit used to measure the amplitude of signals.

derating

to decrease a rating suitable for normal conditions according to guidelines specified for different conditions.

dielectric

a nonconductor of direct electric current. Many conductive liquids/electrolytes exhibit dielectric properties; the relative dielectric constant of water is 80.

dielectric constant (dK)

the ability of a dielectric to store electrical potential energy under the influence of an electric field. Also known as Relative Permittivity. An increase in the
dielectric constant is directly proportional to an increase in signal amplitude. The value is usually given relative to a vacuum /dry air: the dielectric constant of air is 1.

echo

a signal that has been reflected with sufficient magnitude and delay to be perceived in some manner as a signal distinct from that directly transmitted. Echoes are frequently measured in decibels relative to the directly transmitted signal.

Echo Confidence

describes the quality of an echo. Higher values represent higher quality. Echo Threshold defines the minimum value required for an echo to be accepted as valid and evaluated.

Echo Lock Window

a window centered on an echo in order to locate and display the echo's position and true reading. Echoes outside the window are not immediately processed.

Echo Marker

a marker that points to the processed echo.

Echo Processing

the process by which the radar unit determines echoes.

Echo Profile

a graphical display of a processed echo.

Echo Strength

describes the strength of the selected echo in dB referred to 1 µV rms.

false Echo

any echo which is not the echo from the desired target. Generally, false echoes are created by vessel obstructions.

frequency

the number of periods occurring per unit time. Frequency may be stated in cycles per second.

HART

Highway **A**ddressable **R**emote **T**ransducer. An open communication protocol used to address field instruments.

Hertz (Hz):

unit of frequency, one cycle per second. 1 Gigahertz (GHz) is equal to 10^9 Hz.

horn antenna

a conical, horn-shaped antenna which focuses microwave signals. The larger the horn diameter, the more focused the radar beam.

inductance

the property of an electric circuit by virtue of which a varying current induces an electromotive force in that circuit or in a neighboring circuit. The unit is a Henry.

microwaves

the term for the electromagnetic frequencies occupying the portion of the radio frequency spectrum from 1 GHz to 300 GHz.

multiple echoes

secondary echoes that appear as double, triple, or quadruple echoes in the distance from the target echo.

Near Blanking

see Blanking.

nozzle

a length of pipe mounted onto a vessel that supports the flange.

parameters

in programming, variables that are given constant values for specific purposes or processes.

polarization

the property of a radiated electromagnetic wave describing the time-varying direction and amplitude of the electric field vector.

polarization error

the error arising from the transmission or reception of an electromagnetic wave having a polarization other than that intended for the system.

propagation factor (pf)

where the maximum velocity is 1.0, pf is a value that represents a reduction in propagation velocity as a result of the wave travelling through a pipe or
medium.

pulse radar

a radar type that directly measures distance using short microwave pulses. Distance is determined by the return transit time.

radar

radar is an acronym for **RA**dio **D**etection **A**nd **R**anging. A device that radiates electromagnetic waves and utilizes the reflection of such waves from distant objects to determine their existence or position.

range

distance between a transmitter and a target.

range extension

the distance below the zero percent or empty point in a vessel.

relative humidity

the ratio of the actual amount of moisture in the atmosphere to the maximum amount of moisture the atmosphere could hold (which varies depending on the air temperature).

relative permittivity

see dielectric constant.

repeatability

the closeness of agreement among repeated measurements of the same variable under the same conditions.

sensor value

the value produced by the echo processing which represents the distance from sensor reference point to the target. (see **Sensor Mode (2.2.2.)** for an illustration).

shot

one transmit pulse or measurement.

speed of light

the speed of electromagnetic waves (including microwave and light) in free space. Light speed is a constant 299, 792, 458 meters per second.

stilling-well

see stillpipe.

stillpipe

a pipe that is mounted inside a vessel parallel to the vessel wall, and is open to the vessel at the bottom.

TVT (Time Varying Threshold)

a time-varying curve that determines the threshold level above which echoes are determined to be valid.

two wire radar

a low-energy radar. Can be loop powered, analog, intrinsically safe 4 to 20 mA, or a digital (BUS) transmitter.

waveguide antenna

a hollow, metallic tube that transmits a microwave signal to the product target.

Index

A

Abbreviations and identifications list, 291
access control
    remote access, 177
activating, 54
agitator blade detection
    avoiding, 149
AMS Device Manager
    features, 104
analog output
    explanation, 262
    fail signal, 201
    select, 97
    signal range, 201
    simulate via PDM, 97
analog output scale
    setup, 136
antenna
    replacement, 185
antenna types
    flanged encapsulated antenna, 219, 221
    flanged horn antenna, 215
    flanged horn antenna with extension, 217
    threaded horn, 209
    threaded PVDF antenna, 240
Auto False Echo Suppression
    explanation, 259
    setup, 151
    TVT Shaper adjustment, 91
    via PDM, 89, 92

B

beam angle
    flanged encapsulated antenna, 219, 221
    flanged horn, 215, 217
    threaded horn, 211
    threaded PVDF antenna, 240
blanking (see Near Range), 261
bolting instructions, 37
bypass pipe
    see stillpipe, 32

C

cables
    requirements, 42
Calibration Interval, 172
calibration schedules via PDM, 95
cleaning
    instructions, 183
CLEF (Constrained Leading Edge Fit)
    explanation, 256
CLEF range
    setup, 148
communication
    load, 201
    maximum line length, 201
conduits
    requirements, 42
configuration
    new device via AMS, 104
    Quick Start via LUI, 64
configuration flag reset, 97
Correct usage (see Improper device modifications)

D

Damping
    explanation, 262
Damping filter
    setup, 131
data logging
    time-based echo profile storage, 90
Device Address, 176
Device Description (DD)
    see EDD, 80
Device Reset
    see Master Reset, 158
device status
    view via PDM, 101
Diagnostics, 156

dimensions
flanged encapsulated antenna, 219, 221
flanged horn, 215, 217
flat face flange, 247
raised face flange, 242, 244
threaded horn with extension, 211
threaded PVDF antenna, 240

E

echo confidence
parameter setup, 150
echo processing
Process Intelligence, 254
Echo Profile
data logging, 90
view via LUI, 69
view via PDM, 89
Echo Profile Utilities
Auto False Echo Suppression, 88
Echo Profile, 88
TVT Shaper, 88
echo selection
Algorithm, 255
CLEF (Constrained Leading Edge Fit), 256
Position algorithm, 256
time varying threshold (TVT), 255
Echo Setup
quick access via PDM, 95
EDD
updating, 80
edit mode
handheld programmer, 60
key functions, 63
Electronic Device Description (EDD), 78
required for PROFIBUS PA, 80
updating, 80
enclosure
opening, 43

F

factory defaults
Master Reset, 158
Fail-safe
settings, 134
Fail-safe Mode
explanation, 265
Fail-safe Timer
explanation, 265
false echo
see Auto False Echo Suppression, 259
Far Range
explanation, 261
setup, 145
flange
bolting instructions, 37
flange markings
flat face, 247
raised face, 242, 245
flange sizes
flat face, 247
raised face, 242, 244
flanged encapsulated antenna
dimensions, 221
flanged horn
dimensions, 215, 217

H

handheld programmer
edit mode, 61
navigation, 60
HART
multidrop mode, 288
HART Communication
set preambles, 98
HART Communications
details, 285
HART version, 288
hazardous area installations
wiring requirements, 45

I

Identifications and abbreviations
list, 291
Improper device modifications, 16
installation
hazardous area requirements, 45
requirements, 34
warnings and notes, 34

internal temperature
monitoring, 266

K

key functions
edit mode, 63
navigation mode, 60

L

Language, 178
LCD display
contrast adjustment, 175
echo profile viewing, 69
fast mode, 175
measurement mode, 55
lens
replacement, 185
lid-lock set screw, 43
linearization via AMS, 109
Lithium batteries
Safety, 53
Local User Interface (LUI), 55
LOE
Fail-safe Mode, 265
loop test
simulate analog output, 97
loop voltage vs. loop resistance
power supply requirements, 45
loss of echo (LOE)
explanation, 264
LUI (Local User Interface)
contrast adjustment, 55

M

mA output
select analog output, 97
maintenance
calibration schedules, 96
repairs, 183
replacing antenna, 185
replacing lens, 185
service schedules, 96
Maintenance, 184
maintenance settings, 157
Calibration Interval, 172
see Remaining Sensor Lifetime, 165
Service Interval, 168
Master Reset
factory defaults, 158
factory defaults via AMS, 105
measurement range
blanking via Near Range, 261
extension via Far Range, 261
Measurement Response
explanation, 261
mounting
bypass requirements, 32
handheld programmer access, 30
housing construction, 24, 31
nozzle design, 27
nozzle location, 28
on vessel with obstructions, 31
sunshield recommended, 31
multidrop mode, 288

N

Namur NE43, 135, 265
Near Range
explanation, 261
setup, 145

O

operating principles
cleaning, 253
overview, 19

P

password protection
via AMS, 121
via PDM, 102
PDM
see SIMATIC PDM, 77
PED (Pressure Equipment Directive), 23, 268
performance
specifications, 199

PIN to unlock
local access, 178
pipe sizes
flange mounting, 242, 244
polarization reference point, 31
power, 199
power source
requirements, 41
power supply requirements
loop voltage vs. loop resistance, 45
pressure applications, 23
Pressure Equipment Directive, 23, 268
Process Intelligence, 254
process temperature
maximum, 266
programmer
handheld, 57
programming
adjust parameters via PDM, 86
via the handheld programmer, 59
propogation factor
values, 146

Q

Qualified personnel, 17
Quick Start Wizard
via LUI, 64
via SIMATIC PDM, 81

R

raised face flange markings, 241, 243
reading erratic
troubleshooting, 197
reading incorrect
troubleshooting, 197
repair
cautions, 185
excluded liability, 185
reset
see Master Reset, 158
Response Rate
explanation, 261

S

Scan device
synchronize parameters via AMS, 106
Scope of delivery, 11
security
local access, 178
local access control via AMS, 118
local access unlock value, 178
password protection via AMS, 121
remote access control, 177
remote access control via AMS, 118
self-test
device self-test via PDM, 97
sensor reference point
flanged encapsulated antenna, 219, 221
flanged horn, 215, 217
flat faced flange, 247
raised face flange, 241, 243
threaded horn, 211
threaded PVDF horn, 240
service schedules via PDM, 95
settings
adjust parameters via PDM, 86
sidepipe
see bypass pipe, 32
SIMATIC PDM
functions and features, 77
Rev 5.2, SP1 features, 78
Rev 6.0, SP4 features, 78
simulate analog output
loop test, 97
SITRANS LR250
operating principles, 253
startup
transition screen, 54
stillpipe
mounting requirements, 32
Support
contact information, 289
synchronize parameters
scan device via AMS, 106

T

technical data, 199
ambient temperature, 205
antenna, 203

enclosure, 203
environmental, 205
performance, 199
power, 199
pressure, 205
process connections, 202
process temperature, 205
weight, 203
technical support
contact information, 289
test
loop test, 97
threaded connection markings, 240
threaded horn antenna
dimensions, 211
threaded PVDF antenna
dimensions, 240
trend
view trend line, 100
troubleshooting
communication, 189
operation, 196
TVT (time varying threshold)
explanation, 255
TVT Shaper
manual adjustment via PDM, 91
via PDM, 88

U

unlock value
local access, 178

V

vessel shape
selection, 140

W

Wear
powered hours, 98
poweron resets, 98
view via PDM, 98
wiring
cables, 42
connecting HART, 44
hazardous areas, 45
write protect
local access, 178

For more information

www.siemens.com/level

www.siemens.com/weighing

Siemens AG
Industry Sector
1954 Technology Drive
P.O. Box 4225
Peterborough, ON
Canada K9J 7B1
email: techpubs.smpi@siemens.com

Subject to change without prior notice
A5E32220602 Rev. AC

© Siemens AG 2014

www.siemens.com/processautomation

A5E32220602
Printed in Canada