SIEMENS

SITRANS L

Radar Transmitters
SITRANS LR250 with mA/HART

Operating Instructions

7ML5431 (LR250)
7ML5432 (LR250 flanged encapsulated antenna)
7ML5433 (LR250 hygienic encapsulated antenna)

10/2019
A5E32220602-AG

Introduction 1
Safety information 2
Description 3
Installing/mounting 4
Connecting 5
Commissioning 6
Remote operation 7
Parameter reference 8
Service and maintenance 9
Diagnosing and troubleshooting 10
Technical data 11
Dimension drawings 12
Appendix A: Technical reference A
Appendix B: HART communications B
Appendix C: Certificates and support C
List of abbreviations 13
LCD menu structure 14

Legal information

Warning notice system

This manual contains notices you have to observe in order to ensure your personal safety, as well as to prevent damage to property. The notices referring to your personal safety are highlighted in the manual by a safety alert symbol, notices referring only to property damage have no safety alert symbol. These notices shown below are graded according to the degree of danger.

⚠ DANGER
indicates that death or severe personal injury **will** result if proper precautions are not taken.

⚠ WARNING
indicates that death or severe personal injury **may** result if proper precautions are not taken.

⚠ CAUTION
indicates that minor personal injury can result if proper precautions are not taken.

NOTICE
indicates that property damage can result if proper precautions are not taken.

If more than one degree of danger is present, the warning notice representing the highest degree of danger will be used. A notice warning of injury to persons with a safety alert symbol may also include a warning relating to property damage.

Qualified Personnel

The product/system described in this documentation may be operated only by **personnel qualified** for the specific task in accordance with the relevant documentation, in particular its warning notices and safety instructions. Qualified personnel are those who, based on their training and experience, are capable of identifying risks and avoiding potential hazards when working with these products/systems.

Proper use of Siemens products

Note the following:

⚠ WARNING
Siemens products may only be used for the applications described in the catalog and in the relevant technical documentation. If products and components from other manufacturers are used, these must be recommended or approved by Siemens. Proper transport, storage, installation, assembly, commissioning, operation and maintenance are required to ensure that the products operate safely and without any problems. The permissible ambient conditions must be complied with. The information in the relevant documentation must be observed.

Trademarks

All names identified by ® are registered trademarks of Siemens AG. The remaining trademarks in this publication may be trademarks whose use by third parties for their own purposes could violate the rights of the owner.

Disclaimer of Liability

We have reviewed the contents of this publication to ensure consistency with the hardware and software described. Since variance cannot be precluded entirely, we cannot guarantee full consistency. However, the information in this publication is reviewed regularly and any necessary corrections are included in subsequent editions.

Siemens AG
Digital Industries
Postfach 48 48
90026 NÜRNBERG
GERMANY

Document order number: A5E32220602
Ⓟ 09/2019 Subject to change

Copyright © Siemens AG 2019.
All rights reserved

Table of contents

1 Introduction 9

1.1 LR250 mA/HART manual usage 9

1.2 Purpose of this documentation 9

1.3 Revision history 9

1.4 Industrial use note 10

1.5 Checking the consignment 11

1.6 Security information 11

1.7 Transportation and storage 12

1.8 Notes on warranty 12

2 Safety information 13

2.1 Preconditions for safe use 13
2.1.1 Safety marking symbols 13
2.1.2 Laws and directives 13
2.1.3 FCC Conformity 14
2.1.4 Industry Canada conformity 14
2.1.5 Conformity with European directives 15
2.1.6 Radio Equipment Directive (RED) 2014/53/EU 16
2.1.7 CE Electromagnetic Compatibility (EMC) Conformity 16

2.2 Improper device modifications 17

2.3 Requirements for special applications 17

2.4 Use in hazardous areas 17

3 Description 19

3.1 SITRANS LR250 overview 19

3.2 Programming 20

3.3 Applications 20

3.4 Approvals and certificates 20

4 Installing/mounting 21

4.1 Basic safety information 21
4.1.1 Unsuitable cables, cable glands and/or plugs 22
4.1.2 Pressure applications 22
4.1.2.1 Pressure Equipment Directive, PED, 14/68/EU 23

4.2 Installation location requirements 24

4.3 Proper mounting 25
4.3.1 Nozzle design 26
4.3.2 Nozzle location 26

4.3.3 Orientation in a vessel with obstructions 29
4.3.4 Mounting on a Stillpipe or Bypass Pipe 29
4.3.5 Device orientation 30

4.4 Installation instructions 30
4.4.1 Threaded versions 31
4.4.2 Flanged versions 32
4.4.3 Hygienic versions 34

4.5 Disassembly 35

5 Connecting 37

5.1 Basic safety information 37

5.2 Connecting SITRANS LR250 37

5.3 Wiring setups for hazardous area installations 39
5.3.1 Intrinsically safe wiring 40
5.3.2 Non-sparking wiring 41
5.3.3 Non-incendive wiring (US/Canada only) 41
5.3.4 Flameproof wiring 42
5.3.5 Increased safety wiring 42
5.3.6 Explosion-proof wiring (US/Canada only) 43

5.4 Instructions specific to hazardous area installations 43
5.4.1 (Reference European ATEX Directive 2014/34/EU) 43

6 Commissioning 45

6.1 Basic safety information 45

6.2 Operating via the handheld programmer 45
6.2.1 Power up 46
6.2.2 Handheld programmer functions 46
6.2.2.1 The LCD display 47
6.2.2.2 Handheld programmer (Part No. 7ML1930-1BK) 49
6.2.3 Programming 50
6.2.3.1 Quick Start Wizard via the handheld programmer 53
6.2.3.2 Auto False Echo Suppression 56
6.2.3.3 Requesting an Echo Profile 56

6.3 Application examples 57
6.3.1 Liquid resin in storage vessel, level measurement 57
6.3.2 Horizontal vessel with volume measurement 59
6.3.3 Application with stillpipe 60

7 Remote operation 63

7.1 Operating via SIMATIC PDM 63
7.1.1 Functions in SIMATIC PDM 63
7.1.1.1 PDM function overview 63
7.1.1.2 Features of SIMATIC PDM Rev. 6.0, SP4 or higher 63
7.1.1.3 Features of SIMATIC PDM Rev. 5.2, SP1 64
7.1.1.4 SIMATIC PDM Version 64
7.1.2 Initial setup 64
7.1.2.1 Deactivating buffers 64
7.1.3 Updating the Electronic Device Description (EDD) 65
7.1.3.1 Configuring a new device 65

7.1.4 Quick Start Wizard via SIMATIC PDM 66
7.1.5 Changing parameter settings using SIMATIC PDM 70
7.1.6 Parameters accessed via pull-down menus 71
7.1.6.1 Echo profile utilities 71
7.1.6.2 Echo profile 72
7.1.6.3 View saved echo profiles 72
7.1.6.4 TVT Shaper 73
7.1.6.5 Auto false echo suppression 74
7.1.6.6 Echo setup 76
7.1.6.7 Maintenance 77
7.1.6.8 Select analog output 78
7.1.6.9 Self test 78
7.1.6.10 Loop test 78
7.1.6.11 Configuration flag reset 78
7.1.6.12 Master reset 79
7.1.6.13 Wear 79
7.1.6.14 HART Communication 79
7.1.6.15 Process variables 79
7.1.6.16 Trend 80
7.1.6.17 Device status 82
7.1.6.18 Update 82
7.1.6.19 Security 82

7.2 Operating via AMS Device Manager 83
7.2.1 Functions in AMS Device Manager 84
7.2.1.1 AMS function overview 84
7.2.1.2 Features of AMS Device Manager 84
7.2.1.3 Electronic Device Description (EDD) 84
7.2.1.4 Configuring a new device 85
7.2.1.5 Startup 85
7.2.1.6 Pull-down menu access 86
7.2.1.7 Device configuration 86
7.2.1.8 Quick Start Wizard via AMS Device Manager 87
7.2.2 Maintenance and diagnostics 95
7.2.3 Communication 96
7.2.4 Security 96
7.2.5 Device Diagnostics 97
7.2.5.1 Process variables 97
7.2.5.2 Password protection 98
7.2.5.3 User Manager utility 98
7.2.6 AMS menu structure 100

7.3 Operating via FDT (Field Device Tool) 104
7.3.1 Device Type Manager (DTM) 104
7.3.2 SITRANS DTM 104
7.3.3 The device EDD 104
7.3.4 Configuring a new device via FDT 105

8 Parameter reference 107

8.1 Alphabetical parameter list 149

9 Service and maintenance 153

9.1 Basic safety information 153

9.2 Cleaning 153
9.3 Maintenance and repair work 154
9.3.1 Unit repair and excluded liability 155
9.3.2 Part replacement 155
9.4 Disposal 157
9.5 Return procedure 157
10 Diagnosing and troubleshooting 159
10.1 Communication troubleshooting 159
10.2 Device status icons 159
10.3 General fault codes 160
10.4 Operation troubleshooting 163
11 Technical data 165
11.1 Power 165
11.2 Performance 165
11.3 Interface 167
11.4 Mechanical 168
11.5 Environmental 170
11.6 Process 170
11.7 Approvals 171
11.8 Programmer (infrared keypad) 173
12 Dimension drawings 175
12.1 Universal polymeric flange 175
12.2 Aluminum horn antenna 177
12.3 Mounting bracket 178
12.4 Aluminum horn with polypropylene lens antenna and polymeric flange 180
12.5 Stainless steel threaded horn antenna 181
12.6 Stainless steel threaded horn antenna with extension 184
12.7 Stainless steel flanged horn antenna 186
12.8 Stainless steel flanged horn antenna with extension 188
12.9 PTFE Flanged encapsulated antenna (2"/DN50/50A sizes only) 190
12.10 PTFE Flanged encapsulated antenna (3"/DN80/80A sizes and larger) 192
12.11 Hygienic encapsulated antenna (2" ISO 2852 sanitary clamp) 194
12.12 Hygienic encapsulated antenna (3" ISO 2852 sanitary clamp) 195
12.13 Hygienic encapsulated antenna (4" ISO 2852 sanitary clamp) 196
12.14 Hygienic encapsulated antenna (DN50 nozzle/slotted nut to DIN 11851) 197

12.15 Hygienic encapsulated antenna (DN80 nozzle/slotted nut to DIN 11851) 198
12.16 Hygienic encapsulated antenna (DN100 nozzle/slotted nut to DIN 11851) 199
12.17 Hygienic encapsulated antenna (DN50 aseptic slotted nut to DIN 11864-1) 200
12.18 Hygienic encapsulated antenna (DN80 aseptic slotted nut to DIN 11864-1) 201
12.19 Hygienic encapsulated antenna (DN100 aseptic slotted nut to DIN 11864-1) 202
12.20 Hygienic encapsulated antenna (DN50 aseptic flange to DIN 11864-2) 203
12.21 Hygienic encapsulated antenna (DN80 aseptic flange to DIN 11864-2) 204
12.22 Hygienic encapsulated antenna (DN100 aseptic flange to DIN 11864-2) 205
12.23 Hygienic encapsulated antenna (DN50 aseptic clamp to DIN 11864-3) 206
12.24 Hygienic encapsulated antenna (DN80 aseptic clamp to DIN 11864-3) 207
12.25 Hygienic encapsulated antenna (DN100 aseptic clamp to DIN 11864-3) 208
12.26 Hygienic encapsulated antenna (Tuchenhagen Type N) 209
12.27 Hygienic encapsulated antenna (Tuchenhagen Type F) 210
12.28 Threaded PVDF antenna 211
12.29 Threaded connection markings 212
12.30 Raised-Face flange 213
12.31 Raised-Face flange per EN 1092-1 for flanged encapsulated antenna 215
12.32 Flat-Face flange 217
12.33 Aseptic/hygienic flange DN50, DN80, DN100 for DIN 11864-2 219
12.34 Process connection tag (pressure rated versions) 221

A Appendix A: Technical reference 223

A.1 Principles of operation 223

A.2 Echo Processing 223
A.2.1 Process Intelligence 223
A.2.2 Echo Selection 224
A.2.3 CLEF Range 227
A.2.4 Echo Threshold 227
A.2.5 Echo Lock 227
A.2.6 Auto False Echo Suppression 228
A.2.7 Measurement Range 229
A.2.8 Measurement Response 229
A.2.9 Damping 230

A.3 Analog Output 230
A.3.1 Sensor Mode 231
A.3.2 Current Output Function 231
A.3.3 Loss of Echo (LOE) 232
A.3.4 Fail-safe Mode 232

A.4 Maximum Process Temperature Chart 233

A.5 Process Pressure/Temperature derating curves 234

A.5.1 Pressure Equipment Directive, PED, 14/68/EU 235
A.5.2 Stainless steel horn antenna 235
A.5.3 Stainless steel flanged horn antenna 236
A.5.4 PTFE flanged encapsulated antenna 239
A.5.5 Aluminum horn, with polypropylene lens antenna version with polypropylene flange 241
A.5.6 PVDF antenna 242
A.5.7 Hygienic encapsulated antenna 242

A.6 Loop power 244
A.6.1 Allowable operating area of SITRANS LR250 245
A.6.2 Curve 1 (General Purpose, Intrinsically Safe, Non-Sparking, Non-incendive) 245
A.6.3 Curve 2 (Flameproof, Increased Safety, Explosion-proof) 246

A.7 Startup behavior 246

B Appendix B: HART communications 247

B.1 SIMATIC PDM 247

B.2 HART Electronic Device Description (EDD) 247

B.3 HART Handheld 375/475 247

B.4 HART Communicator 375 menu structure 247

B.5 HART version 250
B.5.1 Burst Mode 250

C Appendix C: Certificates and support 251

C.1 Technical support 251

C.2 Certificates 251

13 List of abbreviations 253

14 LCD menu structure 255

14.1 LCD menu structure 255

Glossary 259

Index 265

Introduction 1

1.1 LR250 mA/HART manual usage

Note

This manual applies to the SITRANS LR250 mA/HART version only. HART® is a registered trademark of the HART Communication Foundation.

Follow these operating instructions for quick, trouble-free installation, and maximum accuracy and reliability of your device.

We always welcome suggestions and comments about manual content, design, and accessibility. Please direct your comments to:

Technical publications (mailto:techpubs.smpi@siemens.com)

1.2 Purpose of this documentation

These instructions contain all information required to commission and use the device. Read the instructions carefully prior to installation and commissioning. In order to use the device correctly, first review its principle of operation.

The instructions are aimed at persons mechanically installing the device, connecting it electronically, configuring the parameters and commissioning it, as well as service and maintenance engineers.

1.3 Revision history

This history establishes the correlation between the current documentation and the valid firmware of the device.

The documentation of this edition is applicable for the following firmware:

Edition	Firmware rev.	PDM EDD rev.	Date	Changes
1.0	1.00.03	1.00.03	25 Feb 2007	• Initial release
1.1	1.01.00	1.01.00	27 Jul 2007	• EDD [a)]/SIMATIC PDM: **View > Display > Distance** [b)] correctly reported • EDD/SIMATIC PDM: Improved rendering of the echo profile and TVT
2.0	1.01.01	1.01.01	10 Jun 2008	• Maintenance release of firmware and EDD [a)]
3.0	1.01.01	1.01.03	17 Jun 2008	• The internal EDD revision has been incremented

Edition	Firmware rev.	PDM EDD rev.	Date	Changes
3.1	1.02.01	1.02.01	2 Apr 2009	• AMS EDD Rev. 1.02.01 • Support NAMUR NE 43 • Harmonization of menu structures and parameter names across products • Display indicates progress towards first measurement
3.2	1.02.03	1.02.01	16 June 2010	• Display contrast improvement • Antenna type parameter cannot be modified
4.0	1.03.02 (requires HW 2.0.0)	1.02.01	16 June 2010	• Low current HW 2.0.0 supported
4.0	1.03.03 (requires HW 2.0.0)	1.02.01	19 May 2011	• Threaded PVDF antenna supported
11/2012	1.03.04	1.02.03	31 Oct 2012	• LUI updated version (new startup, progress bars, quick start updated to latest version, echo profile pan/zoom on display) • antenna parameter removed, default near range set at factory
08/2014	N/A	N/A	Aug 2014	• Flanged encapsulated antenna version added • Hygienic encapsulated antenna version added
12/2015	N/A	N/A	Dec 2015	• Flameproof radar installation instructions added

[a] Electronic Device Description

[b] See **Sensor Mode (2.2.2.)** for an illustration of **Distance**.

1.4 Industrial use note

NOTICE
Use in a domestic environment This Class B Group 1 equipment is intended for use in industrial areas. In a domestic environment this device may cause radio interference.

1.5 Checking the consignment

1. Check the packaging and the delivered items for visible damages.
2. Report any claims for damages immediately to the shipping company.
3. Retain damaged parts for clarification.
4. Check the scope of delivery by comparing your order to the shipping documents for correctness and completeness.

⚠ WARNING
Using a damaged or incomplete device Risk of explosion in hazardous areas. • Do not use damaged or incomplete devices.

1.6 Security information

Siemens provides products and solutions with industrial security functions that support the secure operation of plants, systems, machines and networks.

In order to protect plants, systems, machines and networks against cyber threats, it is necessary to implement – and continuously maintain – a holistic, state-of-the-art industrial security concept. Siemens' products and solutions constitute one element of such a concept.

Customers are responsible for preventing unauthorized access to their plants, systems, machines and networks. Such systems, machines and components should only be connected to an enterprise network or the internet if and to the extent such a connection is necessary and only when appropriate security measures (e.g. firewalls and/or network segmentation) are in place.

For additional information on industrial security measures that may be implemented, please visit
https://www.siemens.com/industrialsecurity.

Siemens' products and solutions undergo continuous development to make them more secure. Siemens strongly recommends that product updates are applied as soon as they are available and that the latest product versions are used. Use of product versions that are no longer supported, and failure to apply the latest updates may increase customer's exposure to cyber threats.

To stay informed about product updates, subscribe to the Siemens Industrial Security RSS Feed under
https://www.siemens.com/industrialsecurity.

1.7 Transportation and storage

To guarantee sufficient protection during transport and storage, observe the following:

- Keep the original packaging for subsequent transportation.
- Devices/replacement parts should be returned in their original packaging.
- If the original packaging is no longer available, ensure that all shipments are properly packaged to provide sufficient protection during transport. Siemens cannot assume liability for any costs associated with transportation damages.

⚠ CAUTION
Insufficient protection during storage The packaging only provides limited protection against moisture and infiltration. • Provide additional packaging as necessary.

1.8 Notes on warranty

The contents of this manual shall not become part of or modify any prior or existing agreement, commitment or legal relationship. The sales contract contains all obligations on the part of Siemens as well as the complete and solely applicable warranty conditions. Any statements regarding device versions described in the manual do not create new warranties or modify the existing warranty.

The content reflects the technical status at the time of publishing. Siemens reserves the right to make technical changes in the course of further development.

Safety information 2

2.1 Preconditions for safe use

This device left the factory in good working condition. In order to maintain this status and to ensure safe operation of the device, observe these instructions and all the specifications relevant to safety.

Observe the information and symbols on the device. Do not remove any information or symbols from the device. Always keep the information and symbols in a completely legible state.

2.1.1 Safety marking symbols

In manual	On product	Description
⚠	⚠ (Label on product: yellow back-ground.)	WARNING: refer to accompanying documents (manual) for details.

2.1.2 Laws and directives

Observe the test certification, provisions and laws applicable in your country during connection, assembly and operation.

2.1.3 FCC Conformity

US Installations only: Federal Communications Commission (FCC) rules

Note

- This device has been tested and found to comply with the limits Class B digital device part 15 of the FCC Rules. These limits are designed to provide reasonable protection against harmful interference when the equipment is operated in a commercial environment.
- This device has also been tested and found to comply with the limits §15.256, Subpart C-Intentional radiators, pursuant to Part 15 of the FCC Rules. These limits are designed to provide reasonable protection against harmful interference when the equipment is operated in a commercial environment.
- This device generates, uses, and can radiate radio frequency energy and, if not installed and used in accordance with the instruction manual, may cause harmful interference to radio communications, in which case the user will be required to correct the interference at his/her own expense.
- This device is certified to measure levels in fixed or mobile enclosed tanks made from metal, concrete or materials with similar RF attenuating properties.
- Devices equipped with the aluminum horn or the 3 inch or 4 inch stainless horn antennas may be used to measure levels in open air environments or outside enclosed tanks, subject to the following conditions:
  - Devices shall be installed and maintained to ensure a vertically downward orientation of the transmit antenna’s main beam.
  - Devices shall be installed only at fixed locations. Devices shall not operate while being moved or while inside a moving container.
  - Hand-held applications and residential use are prohibited.

2.1.4 Industry Canada conformity

Canada Installations only: Industry Canada (IC) rules

NOTICE
Use on a "no-interference, no-protection" basis The installation of the LPR/TLPR device shall be done by trained installers, in strict compliance with the manufacturer's instructions. • The use of this device is on a "no-interference, no-protection" basis. That is, the user shall accept operations of high-powered radar in the same frequency band which may interfere with or damage this device. However, devices found to interfere with primary licensing operations will be required to be removed at the user's expense.

Note

- This device has been tested and found to comply with the limits RS- 211 - Level Probing Radar Equipment. These limits are designed to provide reasonable protection against harmful interference when the equipment is operated in a commercial environment.
- This device is certified to measure levels in fixed or mobile enclosed tanks made from metal, concrete or materials with similar RF attenuating properties.
- Devices equipped with the aluminum horn or the 3 inch or 4 inch stainless horn antennas may be used to measure levels in open air environments or outside enclosed tanks, subject to the following conditions:
  - Devices shall be installed and maintained to ensure a vertically downward orientation of the transmit antenna's main beam.
  - Devices shall be installed only at fixed locations. Devices shall not operate while being moved or while inside a moving container.
  - Hand-held applications and residential use are prohibited.

2.1.5 Conformity with European directives

The CE marking on the device symbolizes the conformity with the following European directives:

Electromagnetic compatibility EMC 2014/30/EU	Directive of the European Parliament and of the Council on the harmonisation of the laws of the Member States relating to electromagnetic compatibility
Low voltage directive LVD 2014/35/EU	Directive of the European Parliament and of the Council on the harmonisation of the laws of the Member States relating to the making available on the market of electrical equipment designed for use within certain voltage limits
Atmosphère explosible ATEX 2014/34/EU	Directive of the European Parliament and the Council on the harmonisation of the laws of the Member States relating to equipment and protective systems intended for use in potentially explosive atmospheres
Pressure equipment directive PED 2014/68/EU	Directive of the European Parliament and of the Council on the harmonisation of the laws of the Member States relating to the making available on the market of pressure equipment
RED 2014/53/EU	Directive of the European Parliament and of the Council on the harmonisation of the laws of the Member States relating to the making available on the market of radio equipment and repealing Directive 1999/5/EC

The applicable directives can be found in the EC conformity declaration of the specific device.

2.1.6 Radio Equipment Directive (RED) 2014/53/EU

For the receiver test that covers the influence of an interferer signal to the device, the performance criterion has at least the following level of performance according to ETSI TS 103 361 [6]:

- Performance criterion: measurement value variation Δd over time during a distance measurement
- Level of performance: Δd ≤ ±50 mm

2.1.7 CE Electromagnetic Compatibility (EMC) Conformity

This equipment has been tested and found to comply with the following EMC Standards:

EMC Standard	Title
CISPR 11:2009 + A1:2010/EN 55011:2009 + A1:2010, Class B	Limits and methods of measurements of radio disturbance characteristics of industrial, scientific, and medical (ISM) radio-frequency equipment.
EN 61326:2013 (IEC 61326:2012)	Electrical Equipment for Measurement, Control and Laboratory Use – Electromagnetic Compatibility.
EN61000-4-2:2009	Electromagnetic Compatibility (EMC) Part 4-2: Testing and measurement techniques – Electrostatic discharge immunity test.
EN61000-4-3:2006 + A1:2008 + A2:2010	Electromagnetic Compatibility (EMC) Part 4-3: Testing and measurement techniques – Radiated, radio-frequency, electromagnetic field immunity test 2006 + A1:2008 + A2:2010.
EN61000-4-4:2004 + A1:2010	Electromagnetic Compatibility (EMC) Part 4-4: Testing and measurement techniques – Electrical fast transient/burst immunity test.
EN61000-4-5:2006	Electromagnetic Compatibility (EMC) Part 4-5: Testing and measurement techniques – Surge immunity test.
EN61000-4-6:2010	Electromagnetic Compatibility (EMC) Part 4-6: Testing and measurement techniques – Immunity to conducted disturbances, induced by radio-frequency fields.
EN61000-4-8:2010	Electromagnetic Compatibility (EMC) Part 4-8: Testing and measurement techniques – Power frequency magnetic field immunity test.

2.2 Improper device modifications

WARNING

Improper device modifications

Risk to personnel, system and environment can result from modifications to the device, particularly in hazardous areas.

- Only carry out modifications that are described in the instructions for the device. Failure to observe this requirement cancels the manufacturer's warranty and the product approvals.

2.3 Requirements for special applications

Due to the large number of possible applications, each detail of the described device versions for each possible scenario during commissioning, operation, maintenance or operation in systems cannot be considered in the instructions. If you need additional information not covered by these instructions, contact your local Siemens office or company representative.

Note

Operation under special ambient conditions

We highly recommend that you contact your Siemens representative or our application department before you operate the device under special ambient conditions as can be encountered in nuclear power plants or when the device is used for research and development purposes.

2.4 Use in hazardous areas

Qualified personnel for hazardous area applications

Persons who install, connect, commission, operate, and service the device in a hazardous area must have the following specific qualifications:

- They are authorized, trained or instructed in operating and maintaining devices and systems according to the safety regulations for electrical circuits, high pressures, aggressive, and hazardous media.
- They are authorized, trained, or instructed in carrying out work on electrical circuits for hazardous systems.
- They are trained or instructed in maintenance and use of appropriate safety equipment according to the pertinent safety regulations.

WARNING

Loss of safety of device with type of protection "Intrinsic safety Ex i"

If the device has already been operated in non-intrinsically safe circuits or the electrical specifications have not been observed, the safety of the device is no longer ensured for use in hazardous areas. There is a danger of explosion.

- Connect the device with type of protection "Intrinsic safety" solely to an intrinsically safe circuit.
- Observe the specifications for the electrical data on the certificate.

Description

3

3.1 SITRANS LR250 overview

WARNING

Loss of protection

Danger to personnel, system and environment can result from improper use of the device.

- SITRANS LR250 is to be used only in the manner outlined in this manual, otherwise protection provided by the device may be impaired.

SITRANS LR250 is a 2-wire 25 GHz pulse radar level transmitter for continuous monitoring of liquids and slurries in storage vessels including high pressure and high temperature, to a range of 20 meters (66 feet). It is ideal for small vessels, material such as chemicals, food, beverages, solvents (including those of corrosive or aggressive nature), and low dielectric media.

The device consists of an electronic circuit coupled to a permanently attached antenna and either a threaded or flange type process connection.

This device supports HART communication protocol. Signals are processed using Process Intelligence which has been field-proven in over 1,000,000 applications worldwide (ultrasonic and radar).

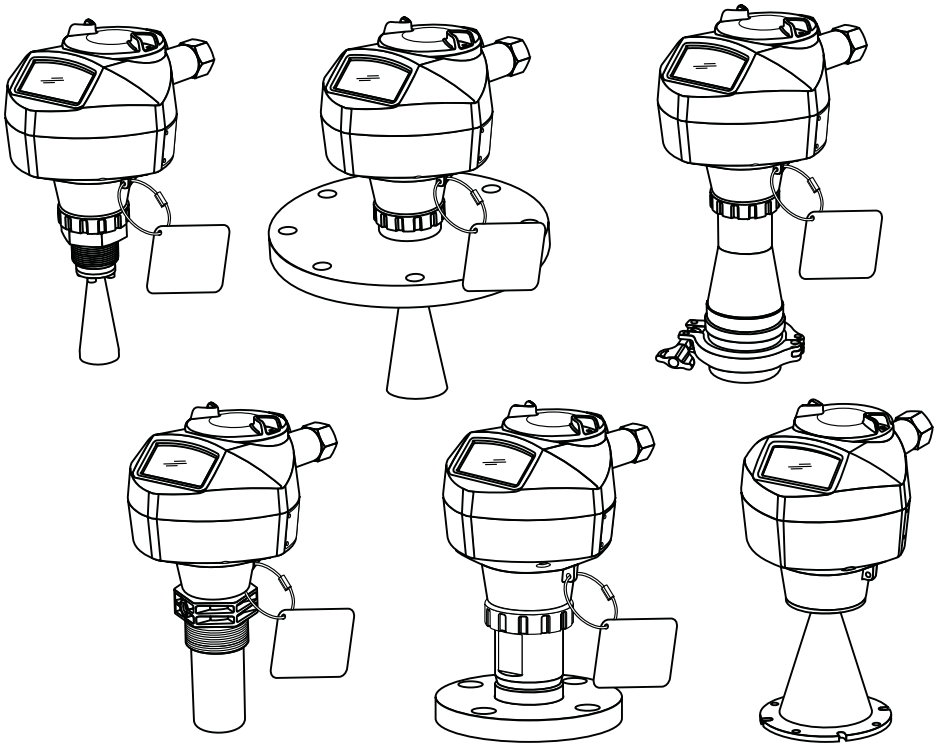

3.2 Programming

This device is very easy to install and configure via a graphical local user interface (LUI). You can modify the built in parameters either locally via the Siemens infrared handheld programmer, or from a remote location using one of the following options:

- SIMATIC PDM
- AMS Device Manager
- FDT/DTM platform (such as PACTware™ or FieldCare)
- HART Handheld 375/475

3.3 Applications

- liquids and slurries
- bulk storage vessels
- simple process vessels
- corrosive and aggressive
- hygienic/sanitary

3.4 Approvals and certificates

Note

For further details see Approvals (Page 171).

SITRANS LR250 is available with approvals for General purpose, sanitary or hygienic and for hazardous areas. In all cases, check the nameplate on your device, and confirm the approval rating.

Process Connections
A wide range of process connections and antenna options are available to suit virtually any vessel configuration.

Installing/mounting

4

4.1 Basic safety information

Note

Material compatibility

Siemens can provide you with support concerning selection of sensor components wetted by process media. However, you are responsible for the selection of components. Siemens accepts no liability for faults or failures resulting from incompatible materials.

WARNING

Unsuitable connecting parts

Risk of injury or poisoning.

In case of improper mounting, hot, toxic, and corrosive process media could be released at the connections.

- Ensure that connecting parts (such as flange gaskets and bolts) are suitable for connection and process media.

WARNING

Exceeded maximum ambient or process media temperature

Danger of explosion in hazardous areas.

Device damage.

- Make sure that the maximum permissible ambient and process media temperatures of the device are not exceeded.

4.1.1 Unsuitable cables, cable glands and/or plugs

WARNING

Unsuitable cables, cable glands and/or plugs

Risk of explosion in hazardous areas.

- Use only cable glands/plugs that comply with the requirements for the relevant type of protection.
- Tighten the cable glands in accordance with the torques specified in Installation instructions (Page 30).
- Close unused cable inlets for the electrical connections.
- When replacing cable glands, only use cable glands of the same type.
- After installation, check that the cables are seated firmly.

WARNING

Incorrect conduit system

Risk of explosion in hazardous areas as result of open cable inlet or incorrect conduit system.

- In the case of a conduit system, mount a spark barrier at a defined distance from the device input. Observe national regulations and the requirements stated in the relevant approvals.

4.1.2 Pressure applications

DANGER

Pressure applications

Danger to personnel, system and environment will result from improper disassembly.

- Never attempt to loosen, remove, or disassemble process connection while vessel contents are under pressure.

WARNING

Pressure applications

Danger to personnel, system and environment can result from improper installation.

- Improper installation may result in loss of process pressure.

WARNING

Exceeded maximum permissible operating pressure

Danger of injury or poisoning.

The maximum permissible operating pressure depends on the device version. The device can be damaged if the operating pressure is exceeded. Hot, toxic and corrosive process media could be released.

- Make sure that the device is suitable for the maximum permissible operating pressure of your system.

Note

- The process connection tag shall remain with the process pressure boundary assembly. (The process pressure boundary assembly comprises the components that act as a barrier against pressure loss from the process vessel: that is, the combination of process connection body and emitter, but normally excluding the electrical enclosure). In the event the device package is replaced, the process connection tag shall be transferred to the replacement unit.
- Representative samples of this device have been hydrostatically tested, meeting or exceeding the requirement of the ASME Boiler and Pressure Vessel Code and the European Pressure Equipment Directive.

Note

- The serial numbers stamped in each process connection body, (flange, threaded, or sanitary), provide a unique identification number indicating date of manufacture. Example: MMDDYY – XXX (where MM = month, DD = day, YY = year, and XXX= sequential unit produced)
- Further markings (space permitting) indicate flange configuration, size, pressure class, material, and material heat code.

4.1.2.1 Pressure Equipment Directive, PED, 14/68/EU

Siemens Level Transmitters with flanged, threaded, or sanitary clamp type process mounts have no pressure-bearing housing of their own and, therefore, do not come under the Pressure Equipment Directive as pressure or safety accessories (see EU Commission Guideline A-08 and A-20).

4.2 Installation location requirements

WARNING

Aggressive atmospheres

Danger to personnel, system and environment can result from unsuitable environment.

- Provide an environment suitable to the housing rating and materials of construction.

NOTICE

Direct sunlight

Device damage.

The device can overheat or materials become brittle due to UV exposure.

- Protect the device from direct sunlight.
- Make sure that the maximum permissible ambient temperature is not exceeded. Refer to the information in Environmental (Page 170).

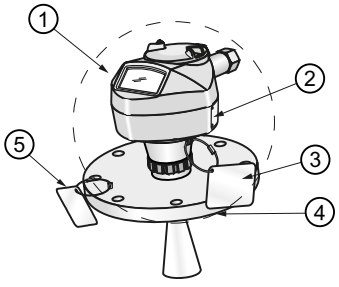

① Ambient temperature
② Device nameplate
③ Device tag
④ Process temperature (at process connection)
⑤ Process connection tag (contains process connection related information)

Antenna	①	④
Horn	-40 to +80 °C (-40 to +176 °F)	with FKM O-ring:-40 to +200 °C (-40 to 392 °F)
		with FFKM O-ring:-20 to +200 °C (-4 to +392 °F)
PVDF and aluminum/poly-propylene lens versions	-40 to +80 °C (-40 to +176 °F)	-40 to +80 °C (-40 to +176 °F)
PTFE flanged encapsulated	-40 to +80 °C (-40 to +176 °F)	-40 to +170 °C (-40 to +338 °F)

Hygienic encapsulated	-40 to +80 °C (-40 to +176 °F)	-40 to +170 °C (-40 to +338 °F)
		with FKM seals used on process connection: -20 to +170 °C (-4 to +338 °F)
		with EPDM seals used on process connection: -40 to +120 °C (-40 to +248 °F)

Note

Details about the process connection, process temperature and materials are laser etched into the body of the flanged and hygienic versions. All other SITRANS LR250 versions have details listed on a tag.

4.3 Proper mounting

Note

- Correct location is key to a successful application.
- Avoid reflective interference from vessel walls and obstructions by following guidelines in this chapter.

NOTICE

Incorrect mounting

The device can be damaged, destroyed, or its functionality impaired through improper mounting.

- Before installing ensure there is no visible damage to the device.
- Make sure that process connectors are clean, and suitable gaskets and glands are used.
- Mount the device using suitable tools. Refer to the information in Installation instructions (Page 30).

Note

- On devices with a removable head, there is no limit to the number of times a device can be rotated without damage.
- When mounting, orient the front or back of the device towards the closest vessel wall or obstruction.
- Do not rotate the enclosure after programming and vessel calibration, otherwise an error may occur, caused by a polarity shift of the transmit pulse.

4.3.1 Nozzle design

Threaded PVDF antenna

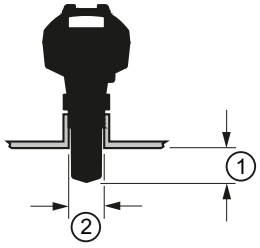

Stainless steel horn antenna

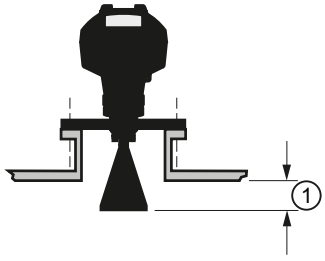

Polymeric lens versions

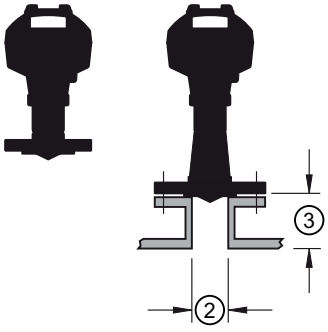

Hygienic encapsulated antenna (HEA)

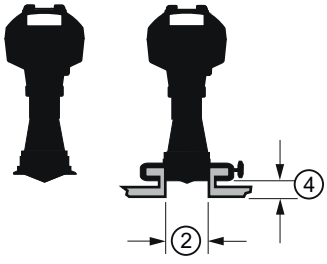

① Minimum clearance: 10 mm (0.4")
② Minimum diameter: 50 mm (2")
③ Maximum nozzle length
④ Maximum length/diameter ratio 1:1

- The end of the antenna must protrude a minimum of 10 mm (0.4") to avoid false echoes being reflected from the nozzle[1].
- Minimum recommended nozzle diameter for the threaded PVDF antenna is 50 mm (2").
- An antenna extension (100 mm/3.93") is available for the horn antenna only.
- When installing the SITRANS LR250 with hygienic process connection, it is good hygienic practice to install the antenna in a nozzle that has a maximum length/diameter ratio of 1:1. For example, 2" (DN50) diameter nozzle should be no longer than 2" (50 mm).
- When removing any sanitary/hygienic clamp version of the HEA to clean the lens, ensure it is re-installed in the exact position it was removed from, to avoid re-commissioning the device.
- The maximum nozzle length for the polymeric lens versions is 500 mm (19.68").

[1] Not applicable for polymeric lens versions or HEA

4.3.2 Nozzle location

- Avoid central locations on tall, narrow vessels
- Nozzle must be vertical and clear of imperfections

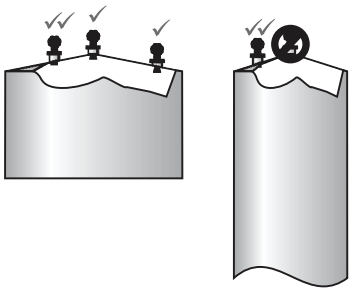

✓✓ Preferred

⊘ Undesirable

Beam angle

Note

- Beam width depends on antenna size and is approximate: see below.
- For details on avoiding false echoes, see Auto False Echo Suppression (Page 228).

- Beam angle is the width of the cone where the energy density is half of the peak energy density.
- The peak energy density is directly in front of and in line with the antenna.
- There is a signal transmitted outside the beam angle, therefore false targets may be detected.

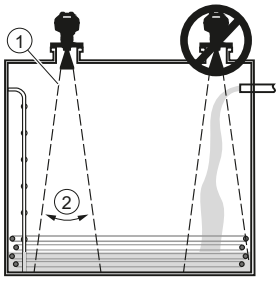

① Emission cone
② Beam angle

Emission cone type and beam angle

Antenna type	Antenna size		Beam angle
Horn	1.5"		19°
	2"		15°
	3"		10°
	4"		8°
Threaded PVDF			19°
	Process connection size	Process connection type	

Antenna type	Antenna size		Beam angle
PTFE flanged encapsulated	2"	Class 150 ASME B16.5	12.8°
	3, 4, 6"	Class 150 ASME B16.5	9.6°
	50A	10K JIS B 2220	12.8°
	80A/100A/150A	10K JIS B 2220	9.6°
	DN50	PN10/16 EN1092-1	12.8°
	DN80/DN100/ DN150	PN10/16 EN1092-1	9.6°
Hygienic encapsulated	2"	Sanitary Clamp according to ISO 2852	12.8°
	3, 4"		9.6°
	DN50	Aseptic/Hygienic nozzle/slotted nut according to DIN 11864-1 [Form A]	12.8°
	DN80/DN100		9.6°
	DN50	Aseptic/Hygienic flanged according to DIN 11864-2 [Form A]	12.8°
	DN80/DN100		9.6°
	DN50	Aseptic/Hygienic Clamp according to DIN 11864-3 [Form A]	12.8°
	DN80/DN100		9.6°
	DN50	Hygienic nozzle/slotted nut according to DIN 11851	12.8°
	DN80/DN100		9.6°
	Type F (50 mm) and Type N (68 mm)	Tuchenhagen Varivent	12.8°

Emission cone

- Keep emission cone free of interference from obstructions such as ladders, pipes, I-beams, or filling streams.

Access for programming

- Provide easy access for viewing the display and programming via the handheld programmer.

4.3.3 Orientation in a vessel with obstructions

Polarization reference point

For best results on a vessel with obstructions, or a stillpipe with openings, orient the front or back of the device toward the obstructions. For an illustration, see Device orientation (Page 30).

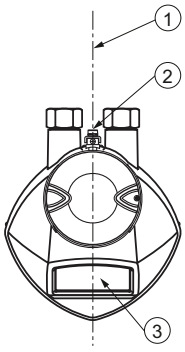

① Polarization axis
② Polarization reference point
③ Display

4.3.4 Mounting on a Stillpipe or Bypass Pipe

A stillpipe or bypass pipe is used for products with a low dK, or when vortex or extremely turbulent conditions exist. It can also be used to provide optimum signal conditions on foaming materials. See Dielectric constant of material measured in Performance (Page 165) for more information.

- The pipe diameter must be matched with the antenna size. Use the largest antenna size that will fit the stillpipe/bypass pipe[1]. See Threaded Horn dimensions (Page 181), Raised-Face Flange per EN 1092-1 (Page 215), Flanged encapsulated dimensions (Page 190)or Hygienic encapsulated dimensions (Page 194).
- One continuous length of metallic pipe is preferred, without joints.
- Any false reflections created by joints/welds/imperfections will lead to inaccuracies of the measurement.
- Joints (if unavoidable) must be machined to ± 0.25 mm (± 0.010") and must have welded connecting sleeve on the outside.
- If using any hygienic process connections in conjunction with a stillpipe/bypass, please ensure that the antenna/lens are cleanable in accordance with the applicable approval.

[1] Mounting in a pipe greater than 100 mm (4") can cause large errors, and therefore is not recommended.

Suitable pipe diameters:	Horn antenna	40 to 100 mm (1.5 to 4")
	PVDF antenna	50 mm (2") only
	Flanged encapsulated antenna	50 to 100 mm (2 to 4")
	Hygienic encapsulated antenna	50 to 100 mm (2 to 4")
Not recommended:	> 100 mm (4")	
Bypass vent:	Required at the upper end of the bypass [1]	

[1] To equalize pressure and keep the liquid level in the bypass constant with the liquid level in the vessel.

4.3.5 Device orientation

Bypass pipe installation

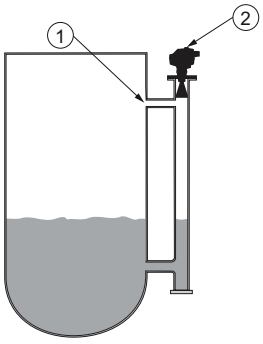

① Vent
② Align front or back of device with vents[1]

Stillpipe installation

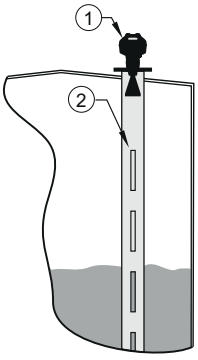

① Align front or back of device with stillpipe slots[1]
② Slots

[1] Horn antenna version shown as example

4.4 Installation instructions

WARNING

Pressure applications

Danger to personnel, system and environment can result from improper installation.

- Improper installation may result in loss of process pressure.

WARNING

Improper installation

Danger to personnel, system and environment can result from improper installation.

- Installation shall only be performed by qualified personnel and in accordance with local governing regulations.

NOTICE

Device handling

Damage to device may result from improper handling.

- Handle the device using the enclosure, not the process connection or tag, to avoid damage.
- Take special care when handling the threaded PVDF and Hygienic or Flanged encapsulated antennas. Any damage to the antenna surface, particularly to the tip/lens, could affect performance. (For example, do not sit device on its lens antenna.)

Note

- For European Union and member countries, installation must be according to ETSI EN 302372.
- Refer to the device nameplate for approval information.

Note

Do not remove the PTFE or polypropylene lens. It is a critical component for operation.

Note

The outer part of the lens on the PTFE flanged encapsulated antenna version may not appear to lie flush before installation and this is normal. This will flatten after installation and will not impact the performance of the device.

4.4.1 Threaded versions

WARNING

Pressure applications

Danger of injury or poisoning.

It may be necessary to use PTFE tape or other appropriate thread sealing compound, and to tighten the process connection beyond hand-tight. (The maximum recommended torque for Threaded versions is 40 N-m (30 ft.lbs.)

1. Before inserting the device into its mounting connection, check to ensure the threads are matching, to avoid damaging them.
2. Simply screw the device into the process connection, and hand tighten, or use a wrench.

4.4.2 Flanged versions

NOTICE
Improper materials The user is responsible for the selection of bolting and gasket materials (except for Flanged encapsulated antenna) which will fall within the limits of the process connection and its intended use, and which are suitable for the service conditions.

Special Instructions for PTFE flanged encapsulated antenna only

Note

- Use spring washers
- Lens assembly acts as integral gasket, no other required
- Use recommended torque values for tightening bolts

Flange bolting: recommended torque

Pressure class	Nominal pipe size (NPS)	Number of bolts	Recommended torque (Nm)
ASME B16.5, Class 150	2"	4	30 – 50
	3"		50 – 70
	4"	8	40 – 60
	6"		70 – 90
EN1092-1, PN16 / JIS B 2220, 10K	DN50/50A	4	30 – 50
	DN80/80A	8	
	DN100/100A		
	DN150/150A		60 – 80

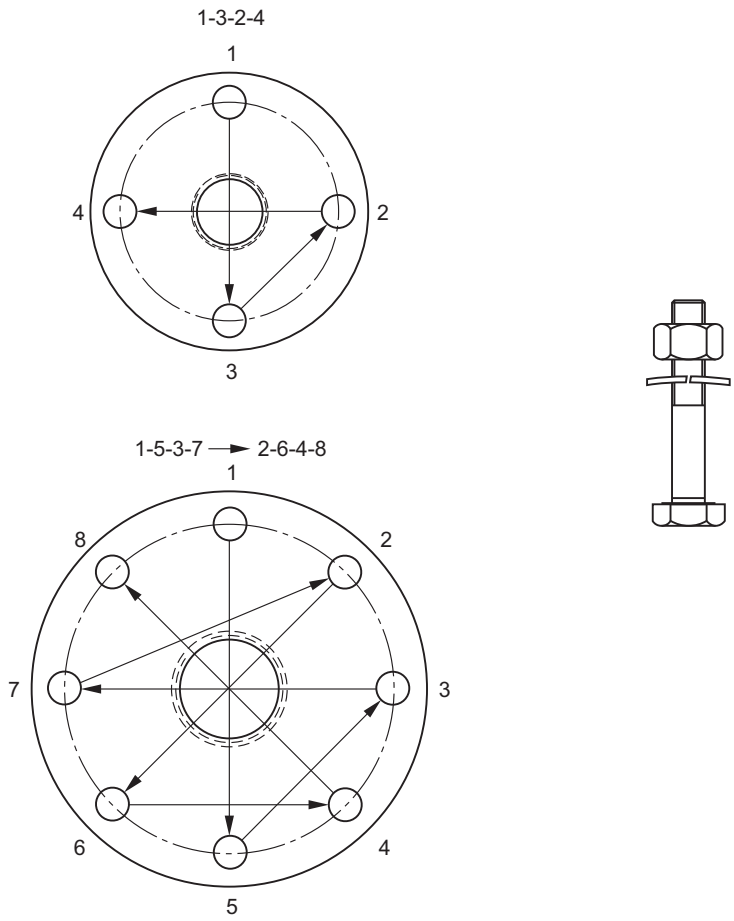

Flange bolting instructions:

1. Use cross-pattern sequence as shown.
2. Check uniformity of the flange gap.
3. Apply adjustments by selective tightening if required.
4. Torque incrementally until desired value is reached.
5. Check/re-torque after 4 to 6 hours.

Recommendations for flange bolting:

- Check bolts periodically, re-torque as required.
- Use new lens, O-ring and spring washers after removal from installation.
  For instructions on replacing the lens, see Part replacement (Page 155).

See Flanged Horn with extension (Page 186), Raised-Face Flange per EN 1092-1 (Page 215), Flat-Face Flange (Page 217), and PTFE Flanged encapsulated antenna (3"/DN80/80A sizes and larger) (Page 192) for dimensions.

4.4.3 Hygienic versions

WARNING

Loss of sanitary approvals

Loss of sanitary approvals can result from improper installation/mounting.

- Take special care when installing in hygienic or sanitary applications. Comply with installation/mounting guidelines to ensure cleanliness and the ability to keep the wetted parts in a position to be readily cleanable. (See relevant EHEDG/3A documentation - not supplied).

NOTICE

Loss of sanitary approvals

- For 3-A Sanitary Approved device installation where the customer tank process connection exists, a leak detection port of minimum 2.4 mm diameter must be provided at the lowest point in the process connection where leakage can occur.
- If leakage is detected at any time while the device is installed, then the device process connection parts must be disassembled and thoroughly cleaned prior to gasket replacement and reassembly.

Note

- For Hygienic encapsulated antenna, the lens acts as a gasket/seal and should be used in conjunction with a cleanable seal as required by the specific process connections (for example, DIN 11864-3).

Hygienic encapsulated antenna leak detection port

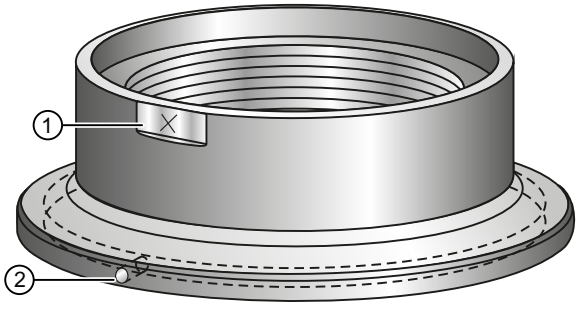

① Orientation mark for leak detection port

② Leak detection port

4.5 Disassembly

DANGER

Pressure applications

Danger to personnel, system and environment will result from improper disassembly.

- Never attempt to loosen, remove, or disassemble process connection while vessel contents are under pressure.

WARNING

Incorrect disassembly

The following risks may result from incorrect disassembly:

- Injury through electric shock

- Risk through emerging media when connected to the process

- Risk of explosion in hazardous area

In order to disassemble correctly, observe the following:

- Before starting work, make sure that you have switched off all physical variables such as pressure, temperature, electricity etc. or that they have a harmless value.
- If the device contains hazardous media, it must be emptied prior to disassembly. Make sure that no environmentally hazardous media are released.
- Secure the remaining connections so that no damage can result if the process is started unintentionally.

Connecting 5

5.1 Basic safety information

WARNING

Missing PE/ground connection

Risk of electric shock.

Depending on the device version, connect the power supply as follows:

- **Power plug**: Ensure that the used socket has a PE/ground conductor connection. Check that the PE/ground conductor connection of the socket and power plug match each other.
- **Connecting terminals**: Connect the terminals according to the terminal connection diagram. First connect the PE/ground conductor.

5.2 Connecting SITRANS LR250

WARNING

Incorrect connection to power source

Risk to personnel, system and environment can result from improper power connection.

- The DC input terminals shall be supplied from a source providing electrical isolation between the input and output, in order to meet the applicable safety requirements of IEC 61010-1. For example, Class 2 or Limited Energy Source.
- All field wiring must have insulation suitable for rated voltages.

WARNING

Loss of protection

Loss of approvals can result from improper connection.

- Check the nameplate on your device, to verify the approval rating.
- Use appropriate cable entry seals to maintain IP or NEMA rating.
- See Wiring setups for hazardous area installations (Page 39).

NOTICE
Improper cables and conduit • Separate cables and conduits may be required to conform to standard instrumentation wiring practices or electrical codes.

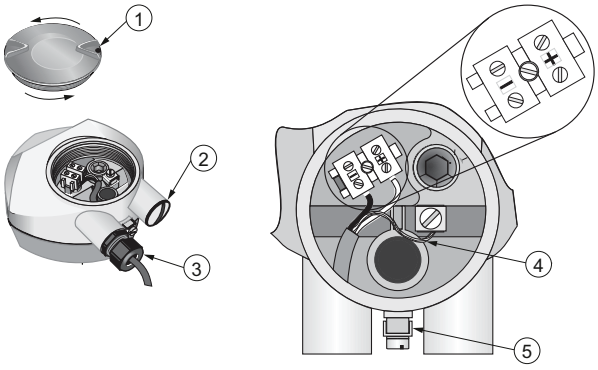

① Use a 2 mm Allen key to loosen the lid-lock set screw [c)]
② Plug (IP68)
③ Optional cable gland [a) b)] (or NPT cable entry)[b)]
④ Cable shield
⑤ Ground terminal

[a)] May be shipped with the device.

[b)] If cable is routed through conduit, use only approved suitable-size hubs for waterproof applications.

[c)] Not applicable to 3-A Sanitary approved device.

Wiring instructions

1. Strip the cable jacket for approximately 70 mm (2.75") from the end of the cable, and thread the wires through the gland. (If cable is routed through conduit, use only approved suitable-size hubs for waterproof applications.)
2. Connect the wires to the terminals as shown: the polarity is identified on the terminal block.
3. Ground the device according to local regulations.
4. Tighten the gland to form a good seal.
5. Close the lid and secure the locking screw before programming and device configuration.

Note

Lid-lock set screw not applicable to 3-A Sanitary approved device.

Connecting HART

Typical PLC/mA configuration with HART

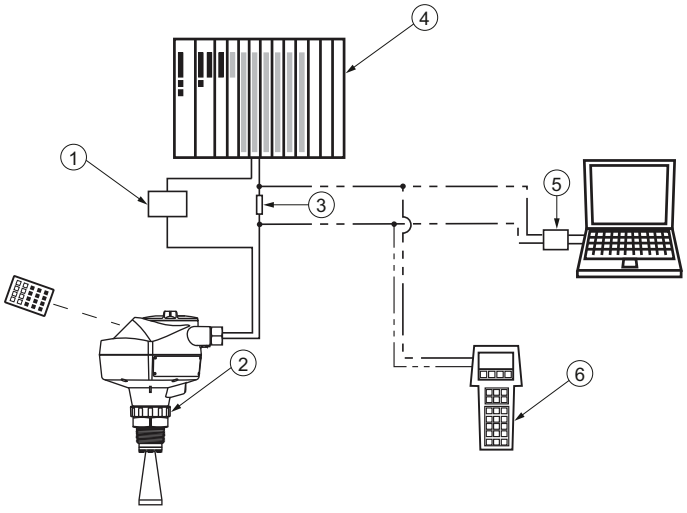

①	Power supply	④	Active PLC
②	SITRANS LR250	⑤	HART modem
③	R = 250 Ω	⑥	HART communicator

Note

- Depending on the system design, the power supply may be separate from the PLC, or integral to it.
- HART resistance (total loop resistance, that is, cable resistance plus 250 Ohm [resistor]) must be limited according to the allowable operating area as shown in either Curve 1 (Page 245) (General Purpose, Intrinsically Safe, Non-Sparking, Non-incendive) or Curve 2 (Page 246) (Flameproof, Increased Safety, Explosion-proof).

5.3 Wiring setups for hazardous area installations

There are six wiring options for hazardous area installations:

- Intrinsically Safe wiring (Page 40)
- Non-Sparking wiring (Page 41)
- Non-incendive wiring (US/Canada only) (Page 41)
- Flameproof wiring (Page 42)
- Increased safety wiring (Page 42)
- Explosion-proof wiring (US/Canada only) (Page 43)

In all cases, check the nameplate on your instrument, confirm the approval rating, and perform installation and wiring according to your local safety codes.

For installation across Zone 0 and Zone 1 boundary:

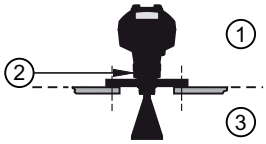

① Zone 1

② Threaded nut acts as partition wall

Material: Stainless steel, aluminum, and potting compound (hardness of at least 88 SHORE D; compressive strength of at least 14,000 psi)

③ Zone 0

5.3.1 Intrinsically safe wiring

Device nameplate (ATEX/IECEX/INMETRO/RCM)

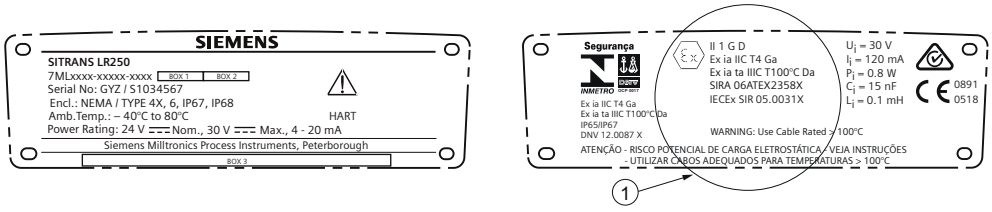

① ATEX certificate

The ATEX certificate listed on the nameplate can be downloaded from our website:

Product page (http://www.siemens.com/LR250)

Go to **Support > Approvals / Certificates.**

The IECEx certificate listed on the nameplate can be viewed on the IECEx website. Go to:

IECEx (http://iecex.iec.ch/)

Click on **Certified Equipment** then enter the certificate number IECEx SIR 05.0031X.

Device nameplate (FM/CSA)

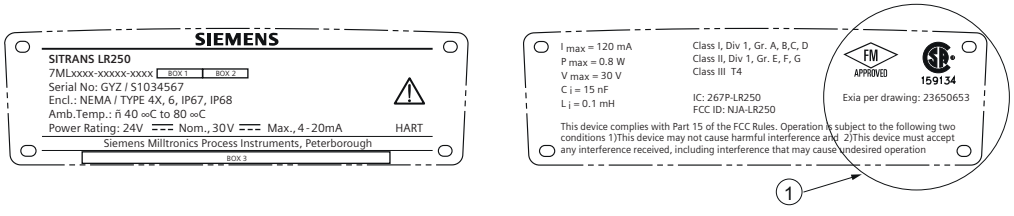

① Connection drawing number

The FM/CSA Instrinsically Safe connection drawing number 23650653 listed on the nameplate can be downloaded from the Siemens Industry Image Database:

FM/CSA Intrinsically Safe connection drawing 23650653 (http://www.automation.siemens.com/bilddb/index.aspx?gridview=view2&objkey=G_FI01_XX_03549&showdetail=true&view=Search)

- For power demands see Curve 1 (General Purpose, Intrinsically Safe, Non-Sparking, Non-incendive) (Page 245).
- For wiring requirements: follow local regulations.
- Approved dust-tight and water-tight conduit seals are required for outdoor NEMA 4X / type 4X / NEMA 6, IP67, IP68 locations.
- Refer to Instructions specific to hazardous area installations (Page 43).

Note

Selecting a suitable PLC input module or power supply requires knowledge about Intrinsic Safety and the application. It is the responsibility of the installer to ensure that the intrinsically safe installation complies with both the apparatus approval requirements and the relevant national code of practice.

5.3.2 Non-sparking wiring

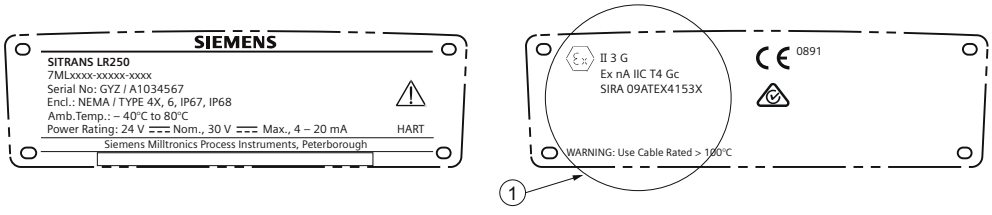

① ATEX certificate

The ATEX certificate listed on the nameplate can be downloaded from our website:

Product page (http://www.siemens.com/LR250)

Go to: **Support > Approvals / Certificates**.

- For power demands see Curve 1 (General Purpose, Intrinsically Safe, Non-Sparking/ Energy Limited, Non-incendive) (Page 245).
- For wiring requirements follow local regulations.

5.3.3 Non-incendive wiring (US/Canada only)

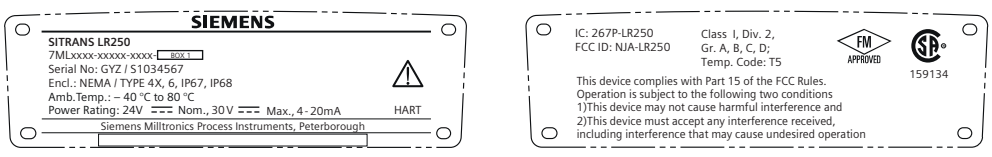

The FM/CSA Class 1, Div 2 connection drawing number 23650673 can be downloaded from the Siemens Industry Image Database:

FM/CSA Class 1, Div 2 connection drawing number 23650673 (http://www.automation.siemens.com/bilddb/index.aspx?gridview=view2&objkey=G_FI01_XX_03551&showdetail=true&view=Search)

- For power demands see Curve 1 (General Purpose, Intrinsically Safe, Non-Sparking, Non-incendive) (Page 245).

5.3.4 Flameproof wiring

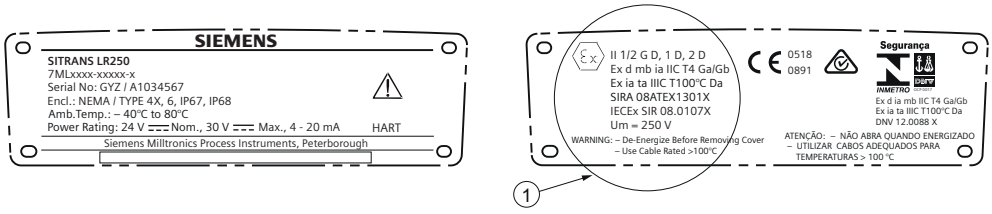

① ATEX certificate

The ATEX certificate listed on the nameplate can be downloaded from our website:

Product page (http://www.siemens.com/LR250)

Go to **Support > Approvals / Certificates**.

The IECEx certificate listed on the nameplate can be viewed on the IECEx website. Go to:

IECEx (http://iecex.iec.ch/)

Click on **Certified Equipment** then enter the certificate number IECEx SIR 08.0107X.

- For power demands see Curve 2 (Flameproof, Increased Safety, Explosion-proof) (Page 246).
- For wiring requirements follow local regulations.
- See also Instructions specific to hazardous area installations (Page 43) and the ATEX certificate listed above.

5.3.5 Increased safety wiring

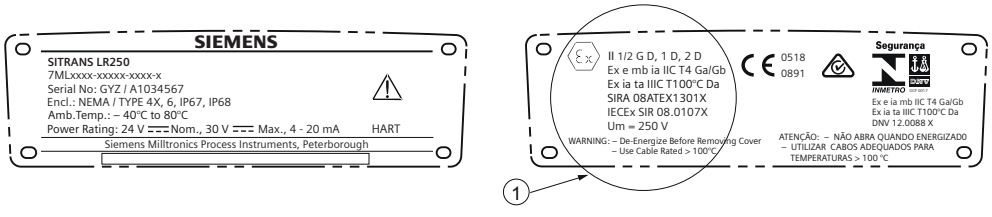

① ATEX certificate

The ATEX certificate listed on the nameplate can be downloaded from our website:

Product page (http://www.siemens.com/LR250)

Go to **Support > Approvals / Certificates**.

The IECEx certificate listed on the nameplate can be viewed on the IECEx website:

IECEx (http://iecex.iec.ch/)

Click on **Certified Equipment** then enter the certificate number IECEx SIR 08.0107X.

- For power demands see Curve 2 (Flameproof, Increased Safety, Explosion-proof) (Page 246).
- For wiring requirements follow local regulations.
- See also Instructions specific to hazardous area installations (Page 43) and the ATEX certificate listed above.

5.3.6 Explosion-proof wiring (US/Canada only)

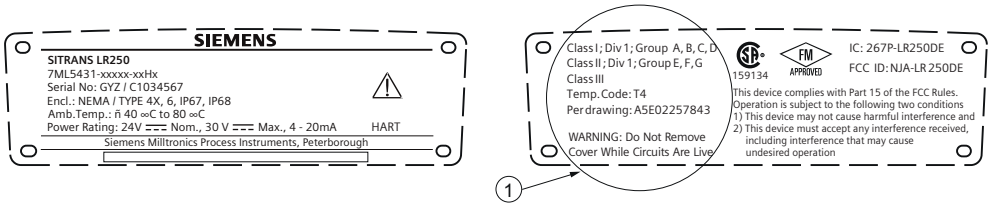

① FM/CSA Explosion Proof connection drawing

The connection drawing number A5E02257843 listed on the nameplate can be downloaded from our website:

FM/CSA Explosion Proof connection drawing A5E02257843 (http://www.automation.siemens.com/bilddb/index.aspx?gridview=view2&objkey=G_FI01_XX_05512&showdetail=true&view=Search)

- For power demands see Curve 2 (Flameproof, Increased Safety, Explosion-proof) (Page 246).

5.4 Instructions specific to hazardous area installations

5.4.1 (Reference European ATEX Directive 2014/34/EU)

The following instructions apply to equipment covered by certificate number SIRA 06ATEX2358X, SIRA 08ATEX1301X, and SIRA 09ATEX4153X.

1. For use and assembly, refer to the main instructions.
2. The equipment is certified for use as Category 1GD equipment per SIRA 06ATEX2358X; Category 1/2 GD, 1D, 2D equipment per SIRA 08ATEX1301X; and Category 3G equipment per SIRA 09ATEX4153X.

3. The equipment may be used with flammable gases and vapors with apparatus group IIC, IIB and IIA and temperature classes T1, T2, T3 and T4.
4. The equipment has a degree of ingress protection of IP67 and a temperature class of T100 °C and may be used with flammable dusts.
5. The equipment is certified for use in an ambient temperature range of –40 °C to +80 °C.
6. The equipment has not been assessed as a safety related device (as referred to by Directive 2014/34/EU, clause 1.5).
7. Installation and inspection of this equipment shall be carried out by suitably trained personnel in accordance with the applicable code of practice (EN 60079-14 and EN 60079-17 in Europe).
8. The equipment is non-repairable.
9. The certificate numbers have an ‘X’ suffix, which indicates that special conditions for safe use apply. Those installing or inspecting this equipment must have access to the certificates.
10. If the equipment is likely to come into contact with aggressive substances, then it is the responsibility of the user to take suitable precautions that prevent it from being adversely affected, thus ensuring that the type of protection is not compromised.
    - Aggressive substances: for example, acidic liquids or gases that may attack metals, or solvents that may affect polymeric materials.
    - Suitable precautions: for example, establishing from the material’s data sheet that it is resistant to specific chemicals.

Special conditions for safe use (denoted by X after the certificate number)

- Parts of the enclosure may be non-conducting and may generate an ignition-capable level of electrostatic charge under certain extreme conditions. The user should ensure that the equipment is not installed in a location where it may be subjected to external conditions (such as high-pressure steam), which might cause a build-up of electrostatic charge on non-conducting surfaces.
- Aluminium, magnesium, titanium or zirconium may be used at the accessible surface of the equipment. In the event of rare incidents, ignition sources due to impact and friction sparks could occur. This shall be considered when the SITRANS LR250 mA/HART is being installed in locations that specifically require group II, level of protection Ga or Da.
- The equipment shall be bonded to the system earth in accordance with the relevant code of practice.
- When the SITRANS LR250 mA/HART is used in the presence of combustible dust, the gland that is fitted to the equipment shall also be suitable for use in the presence of combustible dust, as certified by an ATEX notified body, in addition, the installation of the gland shall not compromise the IP6X rating of the equipment enclosure.

Commissioning 6

6.1 Basic safety information

⚠ WARNING
Loss of explosion protection Risk of explosion when device is not properly commissioned If opening device • Isolate from power. - or - • Ensure that the atmosphere is explosion-free (hot work permit). Ensure device is properly closed before returning to operation.

6.2 Operating via the handheld programmer

The handheld programmer used with this device contains lithium batteries that are non-replaceable.

Lithium batteries are primary power sources with high energy content designed to provide the highest possible degree of safety.

⚠ WARNING
Potential hazard Lithium batteries may present a potential hazard if they are abused electrically or mechanically. Observe the following precautions when handling and using lithium batteries: • Do not short-circuit, recharge or connect with false polarity. • Do not expose to temperatures beyond the specified temperature range. • Do not incinerate. • Do not crush, puncture or open cells or disassemble. • Do not weld or solder to the battery's body. • Do not expose contents to water.

6.2.1 Power up

Power up the device. A transition screen showing first the Siemens logo and then the current firmware revision is displayed while the first measurement is being processed. The first time the device is configured, you will be prompted to select a language (English, German, French, or Spanish). To change the language again, see **Language (7.)**.

Press **Mode** to toggle between Measurement and Program mode.

6.2.2 Handheld programmer functions

The radar device carries out its level measurement tasks according to settings made via parameters. The settings can be modified locally via the Local User Interface (LUI) which consists of an LCD display and a handheld programmer.

A Quick Start Wizard provides an easy step-by-step procedure to configure the device for a simple application. Access the wizards:

- locally [see Quick Start Wizard via the handheld programmer (Page 53)]
- or from a remote location [see Quick Start Wizard via SIMATIC PDM (Page 66), or Quick Start Wizard via AMS Device Manager (Page 87)]

For more complex setups see Application Examples (Page 57), and for the complete range of parameters see Parameter Reference (Page 107).

6.2.2.1 The LCD display

Measurement mode display

Normal operation

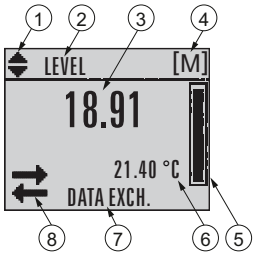

① Toggle indicator [1] for linear units or %

② Selected operation: level, space, distance, or volume

③ Measured value (level, space, distance, or volume)

④ Units

⑤ Bar graph indicates level

⑥ Secondary region indicates on request [2] electronics temperature, echo confidence, loop current, or distance

⑦ Text area displays status messages

⑧ Device status indicator, see Device status icons (Page 159)

[1] Press **UP** or **DOWN** arrow to switch.

[2] In response to a key press request. For details, see Handheld Programmer (Page 49) for key functions in Measurement mode.

Fault present

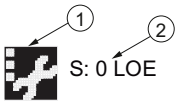

① Device status indicator, see Device status icons (Page 159)

② Text area displays status messages

PROGRAM mode display

Navigation view

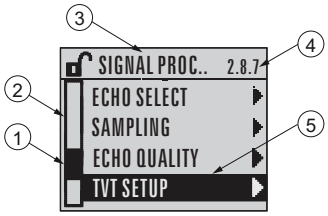

①	Item band	④	Current item number
②	Menu bar	⑤	Current item
③	Current menu		

- A visible menu bar indicates the menu list is too long to display all items.
- A band halfway down the menu bar indicates the current item is halfway down the list.
- The depth and relative position of the item band on the menu bar indicates the length of the menu list, and approximate position of the current item in the list.
- A deeper band indicates fewer items.

Parameter view

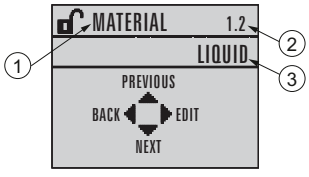

Edit view

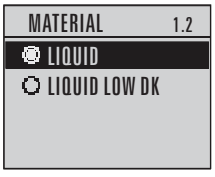

① Parameter name
② Parameter number
③ Parameter value/selection

6.2.2.2 Handheld programmer (Part No. 7ML1930-1BK)

The programmer is ordered separately.

Key functions in measurement mode

Key	Function	Result
5	Updates the loop current	New value is displayed in LCD secondary region.
6	Updates internal enclosure temperature reading	
8	Updates echo confidence value	New value is displayed in LCD secondary region.
	Updates distance measurement	
	Mode opens PROGRAM mode	Opens the menu level last displayed in this power cycle, unless power has been cycled since exiting PROGRAM mode or more than 10 minutes have elapsed since PROGRAM mode was used. Then top level menu will be displayed.
	RIGHT arrow opens PROGRAM mode	Opens the top level menu.
	UP or **DOWN arrow** toggles between linear units and percent	LCD displays measured value in either linear units or percent.

6.2.3 Programming

Note

- While the device is in PROGRAM mode the output remains fixed and does not respond to changes in the device.
- The device automatically returns to Measurement mode after a period of inactivity in PROGRAM mode (between 15 seconds and 2 minutes, depending on the menu level).

Change parameter settings and set operating conditions to suit your specific application. For remote operation see Operating via SIMATIC PDM (Page 63) or Operating via AMS Device Manager (Page 83).

Parameter menus

Note

For the complete list of parameters with instructions, see Parameter Reference (Page 107).

Parameters are identified by name and organized into function groups. See LCD menu structure (Page 255).

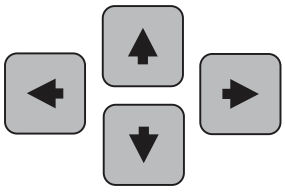

1. QUICK START
2. SETUP
    - 2.1. DEVICE
    - .....
    - 2.7. LINEARIZATION
        - 2.7.1. VOLUME
            - 2.7.1.1. VESSEL SHAPE

1. Enter PROGRAM mode

- Point the programmer at the display from a maximum distance of 300 mm (1 ft).
- **RIGHT arrow** activates PROGRAM mode and opens menu level 1.
- **Mode** opens the menu level last displayed in PROGRAM mode within the last 10 minutes, or menu level 1 if power has been cycled since then.

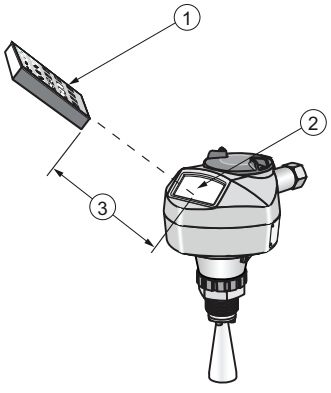

① Handheld programmer ② Display ③ Maximum distance: 300 mm (1 ft)

2. Navigating: key functions in Navigation mode

Note

- In Navigation mode **ARROW** keys move to the next menu item in the direction of the arrow.
- For Quick Access to parameters via the handheld programmer, press Home , then enter the menu number, for example: **2.7.1.** (Volume).

Key	Name	Menu level	Function
	UP or **DOWN arrow**	menu or parameter	Scroll to previous or next menu or parameter
	RIGHT arrow	menu	Go to first parameter in the selected menu, or open next menu.
		parameter	Open **Edit** mode.
	LEFT arrow	menu or parameter	Open parent menu.
	Mode	menu or parameter	Change to **MEASUREMENT** mode.
	Home	menu or parameter	Open top level menu: menu 1.

3. Editing in PROGRAM mode

- Navigate to the desired parameter.
- Press **RIGHT arrow** to open parameter view.
- Press **RIGHT arrow** again to open **Edit** mode. The current selection is highlighted. Scroll to a new selection.
- Press **RIGHT arrow** to accept it.

The LCD returns to parameter view and displays the new selection.

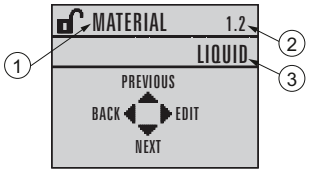

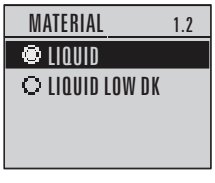

① Parameter name ② Parameter number ③ Current selection

4. Changing a numeric value

- Navigate to the desired parameter.
- Press **RIGHT arrow** ▶ to open parameter view. The current value is displayed.
- Press **RIGHT arrow** ▶ again to open **Edit** mode. The current value is highlighted.
- Key in a new value.
- Press **RIGHT arrow** ▶ to accept it.

The LCD returns to parameter view and displays the new selection.

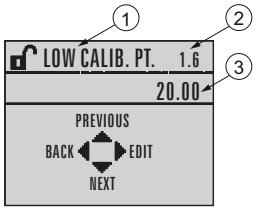

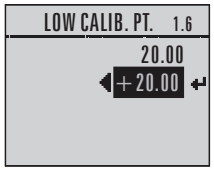

① Parameter name ② Parameter number ③ Current selection

Key functions in edit mode

Key	Name	Function	
▲ ▼	**UP** or **DOWN arrow**	Selecting options	Scrolls to item.
		Numeric editing	• Increments or decrements digits • Toggles plus and minus sign
▶	**RIGHT arrow**	Selecting options	• Accepts the data (writes the parameter) • Changes from **Edit** to **Navigation** mode
		Numeric editing	• Moves cursor one space to the right • or, with cursor on Enter sign, accepts the data and changes from **Edit** to **Navigation** mode
◀	**LEFT arrow:**	Selecting options	Cancels **Edit** mode without changing the parameter.
		Numeric editing	• Moves cursor to plus/minus sign if this is the first key pressed • or moves cursor one space to the left
C	**Clear**	Numeric editing	Erases the display.

Key	Name	Function	
•	**Decimal point**	Numeric editing	Enters a decimal point.
−/+	**Plus or minus sign**	Numeric editing	Changes the sign of the entered value.
0 to 9	**Numeral**	Numeric editing	Enters the corresponding character.

6.2.3.1 Quick Start Wizard via the handheld programmer

Note

- A reset to factory defaults should be performed before running the Quick Start Wizard if the device has been used in a previous application. See **Master Reset (4.1.)**.
- The Quick Start wizard settings are inter-related and changes apply only after you select **Finish** in the Wizard Complete step.
- Do not use the Quick Start wizard to modify parameters: see instead Parameter Reference (Page 107). (Perform customization for your application only after the Quick Start has been completed).
- Default settings in the parameter tables are indicated with an asterisk (*).

1. Quick Start

1.1. Quick Start Wiz

- Point the programmer at the display from a maximum distance of 300 mm (1 ft), then press **RIGHT arrow** ▶ to activate PROGRAM mode and open menu level 1.
- Press **RIGHT arrow** ▶ twice to navigate to menu item 1.1 and open parameter view.
- Press **RIGHT arrow** ▶ to open Edit mode or DOWN arrow to accept default values and move directly to the next item.
- To change a setting, scroll to the desired item or key in a new value.
- After modifying a value, press **RIGHT arrow** ▶ to accept it and press **DOWN arrow** ▼ to move to the next item.
- Quick Start settings take effect only after you select **Finish.**

Material

Selects the appropriate echo processing algorithms for the material [see **Position Detect (2.8.4.2.)** for more detail].

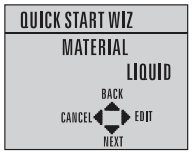

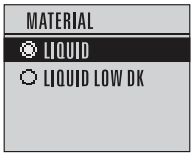

Options	*	LIQUID
		LIQUID LOW DK [a] (low dielectric liquid – CLEF algorithm enabled)

[a] dK < 3.0

Response Rate

Sets the reaction speed of the device to measurement changes in the target range. Use a setting just faster than the maximum filling or emptying rate (whichever is greater).

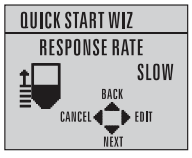

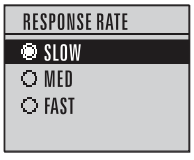

Options		**Response Rate (1.3.)**	**Fill rate per Minute (2.4.2.)/Empty rate per Minute (2.4.3.)**
	*	SLOW	0.1 m/min (0.32 ft/min)
		MED	1.0 m/min (3.28 ft/min)
		FAST	10.0 m/min (32.8 ft/min)

Units

Sensor measurement units.

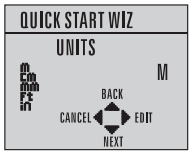

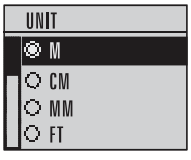

Options	m, cm, mm, ft, in. Default: m

Operation

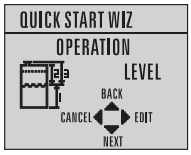

Operation		Description
NO SERVICE		Measurement and associated loop current are not updated, and the device defaults to Fail-safe mode [a].
LEVEL	*	Distance to material surface referenced from Low Calibration Point
SPACE		Distance to material surface referenced from High Calibration Point
DISTANCE		Distance to material surface referenced from Sensor reference point

[a] See **Material Level (2.5.1.)** for more detail.

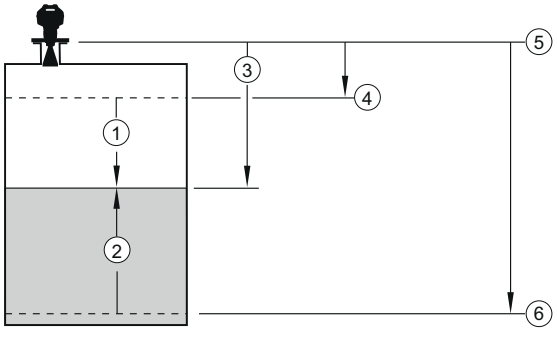

①	Space	④	High Calibration Point (process full level)
②	Level	⑤	Sensor reference point [a]
③	Distance	⑥	Low Calibration Point (process empty level)

[a] The point from which High and Low Calibration points are referenced: see **Dimension drawings**.

Low Calibration Point

Distance from Sensor Reference to Low Calibration Point: usually process empty level. (See **Operation** for an illustration.)

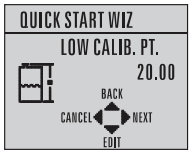

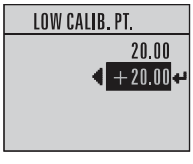

Values	Range: 0.00 to 20.00 m

High Calibration Point

Distance from Sensor reference point to High Calibration Point: usually process full level. (See **Operation** for an illustration.)

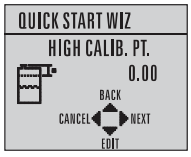

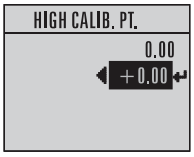

Values	Range: 0.00 to 20.00 m

Wizard complete

Options	BACK, CANCEL, FINISH (Display returns to 1.1 Quick Start Wiz menu when Quick Start is successfully completed.)

Press **DOWN arrow** ▼ **(Finish).** Then press **LEFT arrow** ◄ to return to **Measurement** mode. SITRANS LR250 is now ready to operate.

6.2.3.2 Auto False Echo Suppression

If you have a vessel with known obstructions, we recommend using Auto False Echo Suppression to prevent false echo detection. See **TVT setup (2.8.7.)** for instructions.

This feature can also be used if the display shows a false high level, or the reading is fluctuating between the correct level and a false high level.

6.2.3.3 Requesting an Echo Profile

- In **PROGRAM** mode, navigate to: **Level Meter > 3. > 3.1**.
- Press **RIGHT arrow** ► to request a profile.

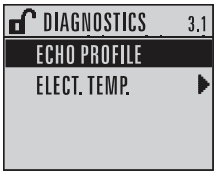

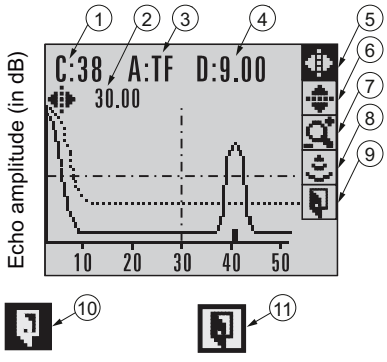

①	Confidence	⑦	Zoom
②	Distance from Low Calibration Point to vertical cross-hair	⑧	Measure
③	Algorithm: t**F** (trueFirst)	⑨	Exit
④	Distance from flange face to target	⑩	Exit icon selected
⑤	Pan left/right - selected	⑪	Exit icon deselected
⑥	Pan up/down		

- Use **UP** ▲ or **DOWN** ▼ **arrow** to scroll to an icon. When an icon is highlighted, that feature becomes active.
- To move a cross-hair, press **RIGHT** ► **arrow** to increase the value, **LEFT** ◄ **arrow** to decrease.
- To Zoom into an area, position the intersection of the cross-hairs at the center of that area, select **Zoom**, and press **RIGHT** ► **arrow.** Press **LEFT** ◄ **arrow** to Zoom out.
- To update the profile, select **Measure** and press **RIGHT** ► **arrow.**
- To return to the previous menu, select **Exit** then press **RIGHT** ► **arrow.**

6.3 Application examples

Note

In the applications illustrated below, values are for example purposes only.

You can use these examples as setup references. Enter the values in the parameter tables to select the corresponding functions.

Configure the basic settings using the Quick Start wizard parameters. (These parameters are inter-related, and changes take effect only after you select **FINISH** to apply changes in the final step.)

In each example, after performing a Quick Start, navigate to the other required parameters either via the handheld programmer, or using a Device Management tool (SIMATIC PDM or AMS Device Manager) and enter the appropriate values.

6.3.1 Liquid resin in storage vessel, level measurement

Note

Minimum distance from flange face to target is limited by **Near Range (2.8.1.)**.

To obtain level measurement/4 to 20 mA output proportional to resin levels:

- Low Calibration Pt. = 5 m (16.5 ft) from sensor reference point
- High Calibration Pt.= 0.5 m (1.64 ft) from sensor reference point
- Max.fill/empty rate = 0.2 m/min (0.65 ft/min)

In the event of a loss of echo:

- SITRANS LR250 is to go into Fail-safe High after 2 minutes.

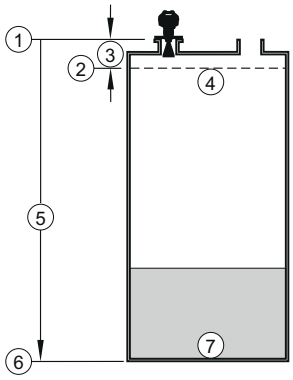

① Sensor reference point
② High calibration point
③ 0.5 m
④ 100% level
⑤ 5 m
⑥ Low calibration point
⑦ 0% level

Parameter type	Parameter No. /Name	Options/ Values	Function
Quick Start Wizard parameters	Introduction	NEXT	Continue with Wizard.
	Language	NEXT	Continue with current language.
	Material	LIQUID	
	Response Rate	MED	Medium =1 m/minute
	Units	M	meters
	Operation	LEVEL	Level
	Low Calibration Point	5	5 m (16.5 ft)
	High Calibration Point	0.5	0.5 m (1.64 ft)
	Wizard Complete	FINISH	Transfers Quick Start settings to device.
Independent parameters	LOE Timer (2.5.2.)	2	2 minutes
	Material Level (2.5.1.)	HI	Fail-safe level set to High

Return to **Measurement**: press **Mode** to start normal operation.

6.3.2 Horizontal vessel with volume measurement

Note

The minimum distance from the flange face to the target is limited by **Near Range (2.8.1.)**.

To obtain level measurement/4 to 20 mA output proportional to vessel volume in a chemical vessel:

- Low Calibration Point = 3.5 m (11.48 ft) from sensor reference point
- High Calibration Point = 0.5 m (1.64 ft) from sensor reference point
- Max. fill/empty rate = 0.2 m/min (0.65 ft/min)

Select vessel shape, Parabolic Ends, and enter values for A and L, to obtain a volume reading instead of level.

In the event of a loss of echo: SITRANS LR250 is to go into Fail-safe High after 2 minutes.

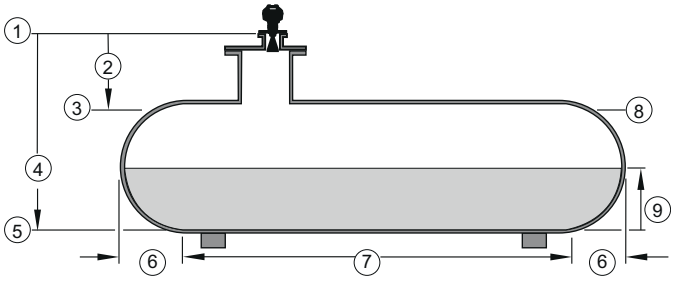

① Sensor reference point
② 0.5 m
③ High Calibration Point
④ 3.5. m
⑤ Low Calibration Point
⑥ A = 0.8 m
⑦ L = 6 m
⑧ 100% = 8000 L
⑨ Volume reading

Parameter type	Parameter No./Name	Options/ Values	Function
Quick Start Wizard parameters	Introduction	NEXT	Continue with Wizard.
	Language	NEXT	Continue with current language.
	Material	LIQUID	
	Response Rate	MED	Medium =1 m/minute
	Units	M	meters
	Operation	LEVEL	Level is reported as Volume when a vessel shape is selected.
	Low Calibration Point	3.5	3.5 m (11.48 ft)
	High Calibration Point	0.5	0.5 m (1.64 ft)
	Wizard Complete	FINISH	Transfers Quick Start settings to device.

Parameter type	Parameter No./Name	Options/ Values	Function
Independent parameters	Vessel Shape (2.7.1.1.)	PARABOLIC ENDS	Defines vessel shape.
	Maximum Volume (2.7.1.2.)	8000	8000 liters
	Vessel Dimension A (2.7.1.3.)	0.8	0.8 m (2.62 ft)
	Vessel Dimension L (2.7.1.4.)	6	6 m (19.68 ft)
	LOE Timer (2.5.2.)	2	2 minutes
	Material Level (2.5.1.)	HI	Fail-safe level set to High

Return to **Measurement:** press **Mode** to start normal operation.

6.3.3 Application with stillpipe

Note

- **Near Range (2.8.1.)** (Blanking) will be set at the factory. Check the process connection tag for specific values.
- Suitable pipe diameters are 40 mm (1.5") to 100 mm (4").
- The pipe diameter must be matched with the antenna size. Use the largest antenna size that will fit the stillpipe/bypass pipe. See Dimensions (Page 175).
- See Mounting on a Stillpipe or Bypass Pipe (Page 29) for installation guidelines.

This application is to obtain a level measurement and corresponding 4 to 20 mA output proportional to the oil level in a fuel storage vessel.

- Low Calibration Pt. is 5 m (16.5 ft) from the sensor reference point.
- High Calibration Pt. is 0.5 m (1.65 ft) from the sensor reference point.
- The stillpipe inside diameter is 50 mm (1.96").
- The maximum rate of filling or emptying is about 0.1 m (4")/min.

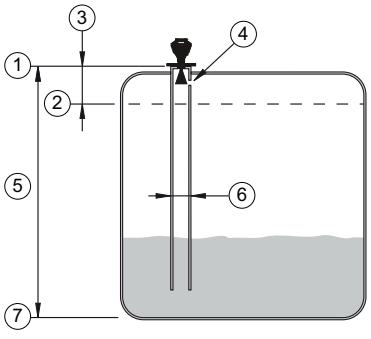

① sensor reference point
② high calibration point
③ 0.5 m
④ vent hole
⑤ 5 m
⑥ 50 mm I.D.
⑦ low calibration point

Parameter type	Parameter No./Name	Options/Values	Function
Quick Start Wizard	Introduction	NEXT	Continue with Wizard.
	Language	NEXT	Continue with current language.
	Material	LIQUID LOW DK	
	Response Rate	MED	Medium =1 m/minute
	Units	M	meters
	Operation	LEVEL	Level is reported as Volume when a vessel shape is selected.
	Low Calibration Point	5	5 m (16.5 ft)
	High Calibration Point	0.5	0.5 m (1.64 ft)
	Wizard Complete	FINISH	Transfers Quick Start settings to device.
Independent parameters	Propagation Factor (2.8.3.)[a)]	0.988	P.F. for a 50 mm (1.96") I.D. stillpipe
	Position Detect (2.8.4.2.)	HYBRID	
	CLEF Range (2.8.4.4.)[a)]	4.3	Low calibration point - 0.7 m = 4.3 m (14.1 ft)

a) The recommended values for the propagation factor and for CLEF range are dependent on the stillpipe diameter. Refer to the next table for values.

Propagation Factor/Stillpipe Diameter

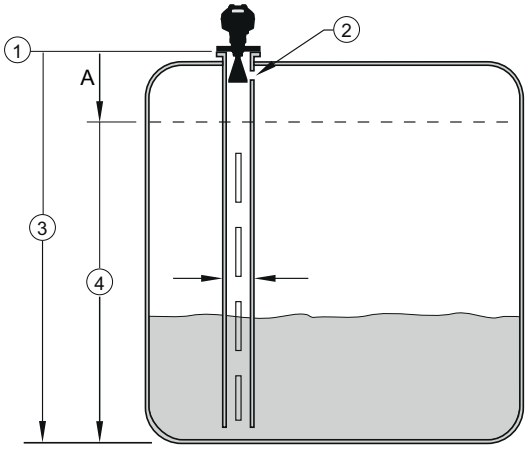

① sensor reference point
② air gap
③ low calibration point
④ CLEF range 2.8.4.4.
A 700 or 1000 mm (see CLEF Range settings in table below)

Values	Range	0.3 to 1.0 depending on pipe size		
	Default	1.0000		
Nominal Pipe Size [a)]	40 mm (1.5")	50 mm (2")	80 mm (3")	100 mm (4")

Propagation Factor	0.9844	0.988	0.9935	0.9965
CLEF Range (2.8.4.4.) settings	Low calibration point - 700 mm (2.29 ft)[b]	Low calibration point - 700 mm (2.29 ft)[b]	Low calibration point -1000 mm (3.28 ft)[b]	Low calibration point -1000 mm (3.28 ft)[b]

[a] Since pipe dimensions may vary slightly, the propagation factor may also vary.

[b] CLEF range covers the whole measurement range except first 700 or 1000 mm from sensor reference point

Note

Flanged and Hygienic encapsulated antenna

For Flanged encapsulated antenna (7ML5432) and Hygienic encapsulated antenna (7ML5433) match the process connection size to the pipe diameter. For example, DN80/3" flange to DN80/3" pipe.

Remote operation 7

7.1 Operating via SIMATIC PDM

SIMATIC PDM is a software package used to commission and maintain process devices. Please consult the operating instructions or online help for details on using SIMATIC PDM. You can find more information on versions and compatibility at our website.

See also

SIMATIC PDM (www.siemens.com/simatic-pdm)

7.1.1 Functions in SIMATIC PDM

Note

- For a complete list of parameters, see Parameter Reference (Page 107).
- While the device is in **PROGRAM** mode the output remains fixed and does not respond to changes in the device.

7.1.1.1 PDM function overview

SIMATIC PDM monitors the process values, alarms and status signals of the device. It allows you to display, compare, adjust, verify, and simulate process device data; also to set schedules for calibration and maintenance.

Parameters are identified by name and organized into function groups. See LCD menu structure (Page 255) for a chart and Changing parameter settings using SIMATIC PDM (Page 70) for more details. The menu structure for SIMATIC PDM is almost identical to that for the LCD.

See Parameters accessed via pull-down menus (Page 71) for parameters that do not appear in the menu structure in SIMATIC PDM.

7.1.1.2 Features of SIMATIC PDM Rev. 6.0, SP4 or higher

The graphic interface in the device makes monitoring and adjustments easy.

Feature	Function
Quick Start (Page 66)	Device configuration for simple applications
Echo Profile Utilities (Page 71)	Easy access to echo profile viewing/comparison, TVT shaping, auto false echo suppression and echo setup

Feature	Function
Auto False Echo Suppression (Page 74)	Screen out false echoes
TVT Shaper (Page 73)	Manual TVT adjustment
Process Variables (Page 79)	Monitor process variables and level trend
Security (Page 82)	Protect security and communication parameters from modification by the maintenance user

7.1.1.3 Features of SIMATIC PDM Rev. 5.2, SP1

SIMATIC PDM Rev. 5.2 SP1 is supported only for basic configuration and troubleshooting. For advanced features such as the Quick Start wizard, Rev. 6.0 SP3 HF2 or higher is required.

7.1.1.4 SIMATIC PDM Version

Check the support page of our website to make sure you have the latest version of SIMATIC PDM, the most recent Service Pack (SP) and the most recent hot fix (HF): SIMATIC PDM Version (https://support.automation.siemens.com) Browse to **Product Support > Automation Technology > Process control systems > SIMATIC PCS 7 > System components > Plant Device Management > SIMATIC PDM.**

7.1.2 Initial setup

To ensure that SIMATIC PDM connects properly, complete the following two processes:

1. De-activate buffers
2. Update the Electronic Device Description (EDD)

7.1.2.1 Deactivating buffers

This deactivation is required to align SIMATIC PDM with the HART modem for Windows 2000® and Windows® XP operating Systems. Windows® is a registered trademark of the Microsoft Corporation.

Note

- This deactivation is only necessary when you're connecting via RS232 (COM1) as opposed to USB.
- You will need administrative rights on your operating system to deactivate buffers.
- SIMATIC PDM operates only in the Windows XP Professional version, not in the Home version.

1. Click **Start/Settings/Control Panel** to begin configuration.
2. Double click **System**, select the **Hardware** tab, and click the **Device Manager** button.
3. Open **Ports** folder and double click the COM Port used by the system to open the **Communications Port Properties** window.
4. Select the **Port Settings** tab and double click the **Advanced** button.
5. If the **Use FIFO buffers** radio box is selected, click to deselect.

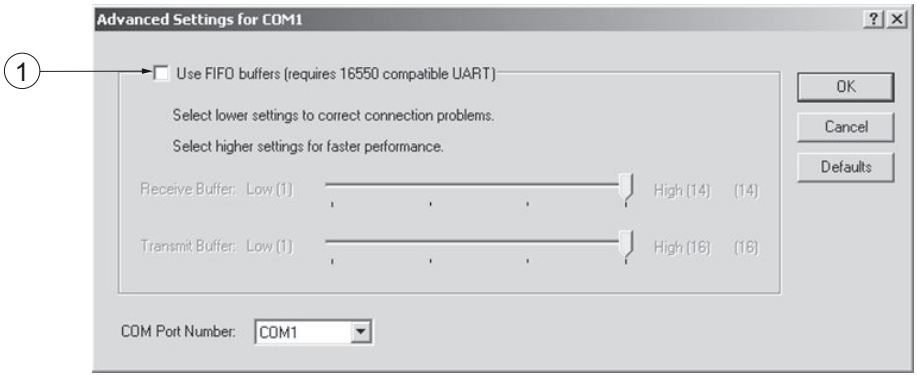

① Deselect **Use FIFO buffers** radio box

6. Click **OK** to close out. Close all screens and then reboot.

7.1.3 Updating the Electronic Device Description (EDD)

You can locate the EDD in Device Catalog, under **Sensors/Level/Echo/SiemensMilltronics/SITRANS LR250**. The EDD revision must match the Firmware revision in the device.

To install a new EDD:

1. Download the most current EDD from our website: Product page (http://www.siemens.com/LR250)
2. Save files to your computer, and extract the zipped file to an easily accessed location.
3. Launch **SIMATIC PDM – Manage Device Catalog**, browse to the unzipped EDD file and select it.

7.1.3.1 Configuring a new device

Note

- Clicking on **Cancel** during an upload from device to SIMATIC PDM will result in some parameters being updated.
- Application Guides for setting up HART devices with SIMATIC PDM can be downloaded from our website:
  Product page (http://www.siemens.com/LR250).

1. Check that you have the most recent EDD, and if necessary update it. [See Updating the Electronic Device Description (EDD) (Page 65) above].
2. Launch SIMATIC Manager and create a new project for the device.
3. Open the menu **Device – Master Reset** and click on **OK** to perform a reset to Factory Defaults.
4. After the reset is complete upload parameters to the PC/PG.
5. Configure the device via the Quick Start wizard.

7.1.4 Quick Start Wizard via SIMATIC PDM

The graphic Quick Start Wizard provides an easy step-by-step procedure that configures the device for a simple application.

Please consult the operating instructions or online help for details on using SIMATIC PDM.

1. If you have not already done so, check that you have the most up-to-date Electronic Device Description (EDD) for your device. [See Configuring a new device (Page 65).]
2. Launch SIMATIC Manager and create a new project. Application Guides for setting up HART and PROFIBUS PA devices with SIMATIC PDM can be downloaded from the product page of our website:
   Product page (http://www.siemens.com/LR250)

Quick start

Note

- A reset to **Factory Defaults** should be performed before running the Quick Start Wizard if device has been used in a previous application. See Master Reset via SIMATIC PDM (Page 79).
- The Quick Start wizard settings are inter-related and changes apply only after you click on **FINISH AND DOWNLOAD** at the end of the last step to save settings offline and transfer them to the device.
- Do not use the Quick Start Wizard to modify individual parameters: for quick access to echo profile parameters, see Echo Profile via SIMATIC PDM (Page 72) or see Parameter Reference (Page 107) for a complete list. (Perform customization only after the Quick Start has been completed.)
- Click on **BACK** to return and revise settings or **CANCEL** to exit the Quick Start.
- For a vessel with obstructions see Auto False Echo Suppression via SIMATIC PDM (Page 74).

Launch SIMATIC PDM, open the menu **Device – Wizard - Quick Start**, and follow steps 1 to 5.

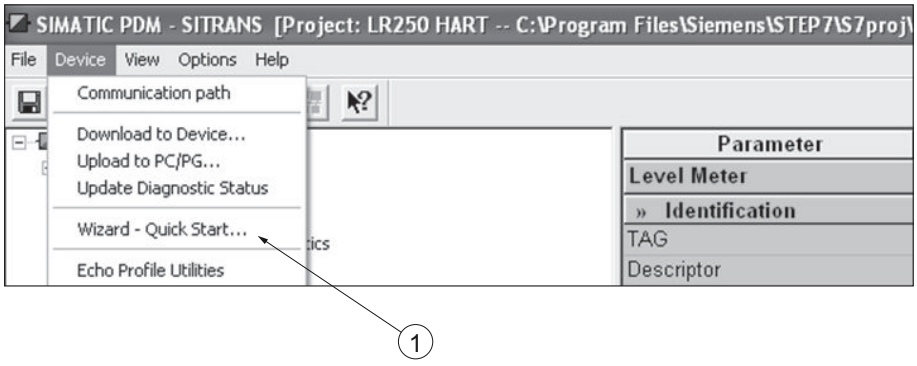

① Quick Start

Step 1 – Identification

Note

- The layout of the dialog boxes shown may vary according to the resolution setting for your computer monitor.
- SITRANS PDM limits the TAG field to a maximum of 24 characters.

1. Click on **Read Data from Device** to upload Quick Start parameter settings from the device to the PC/PG and ensure PDM is synchronized with the device.
2. If required, change the language for the local user interface.
3. Click on **NEXT** to accept the default values. (Description, Message, and Installation Date fields can be left blank.)

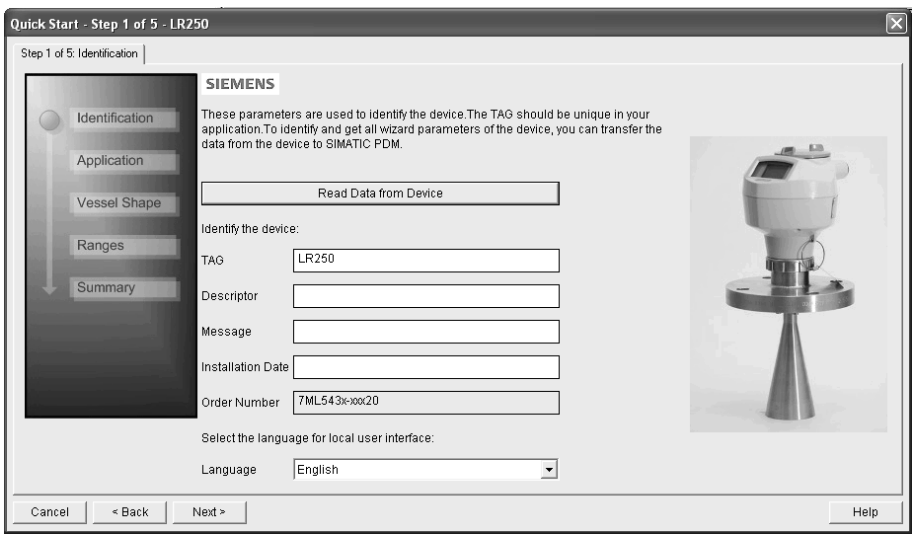

Step 2 – Application

Select the application type (level or volume) and the material, then click on **NEXT**.

See Application with Stillpipe (Page 60) for a Low Dielectric Liquid application.

Step 3 – Vessel Shape

The vessel shapes shown are predefined.

For a vessel with obstructions, see Auto False Echo Suppression via SIMATIC PDM (Page 74).

Select the vessel shape, and click on **NEXT**.

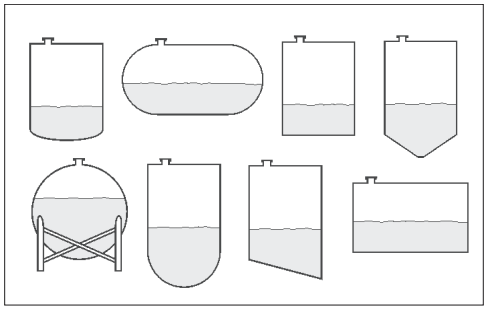

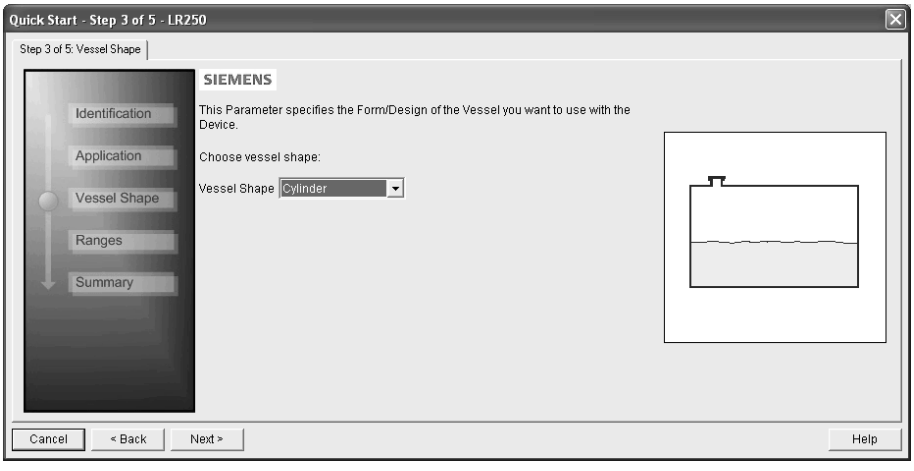

Step 4 – Ranges

Set the parameters, and click on **NEXT**.

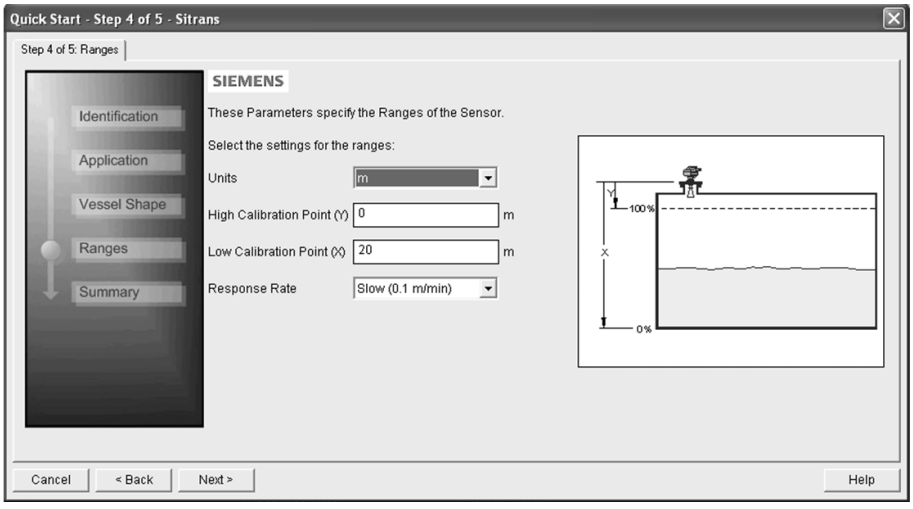

Step 5 – Summary

Check parameter settings, and click on **BACK** to return and revise values, **FINISH** to save settings offline, or **FINISH AND DOWNLOAD** to save settings offline and transfer them to the device.

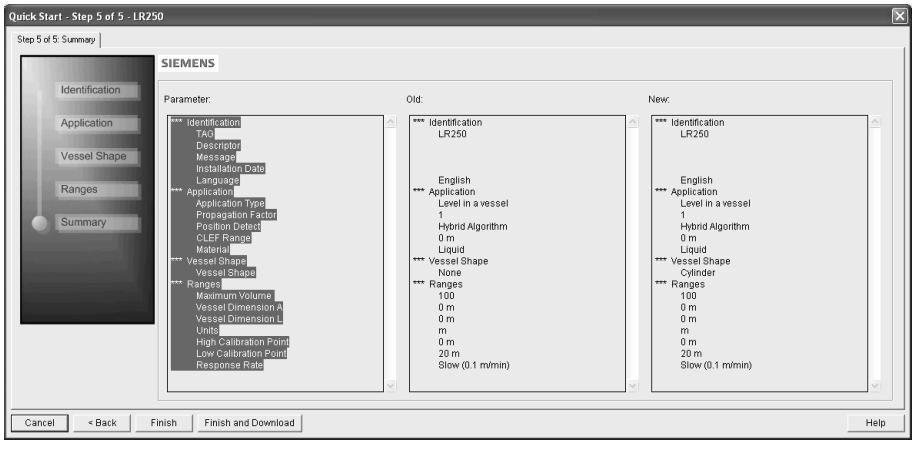

The message **Quick Start was successful** will appear. Click on **OK**.

7.1.5 Changing parameter settings using SIMATIC PDM

Note

- For a complete list of parameters, see Parameter Reference (Page 107).
- Clicking on **Cancel** during an upload from device to SIMATIC PDM will result in some parameters being updated.

Many parameters are accessed via pull-down menus in PDM. See Parameters accessed via pull-down menus (Page 71) for others.

1. Launch SIMATIC PDM, connect to device, and upload data from device.
2. Adjust parameter values in the parameter value field then **Enter**. The status fields read **Changed**.
3. Open the Device menu, click on **Download to device**, then use **File - Save** to save settings offline. The status fields are cleared.

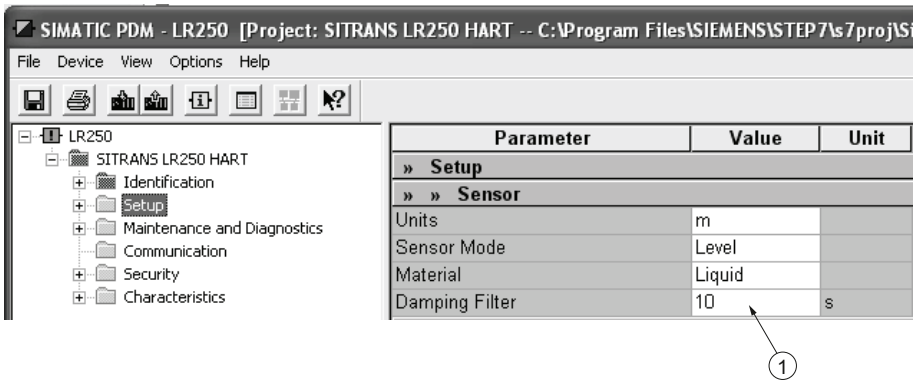

① Value fields

7.1.6 Parameters accessed via pull-down menus

Click on **Device** or **View** to open the associated pull-down menus.

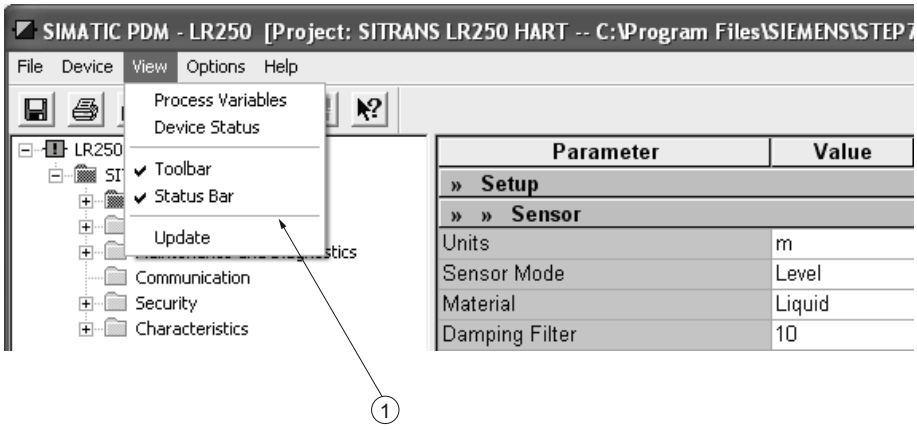

① pull-down menus

Pull-down menus

Device menus	View menus
Communication path	Process Variables (Page 79)
Download to device	Device Status (Page 82)
Upload to PC/PG Update Diagnostic Status	Toolbar Status bar
Wizard - Quick Start (Page 66)	Update
Echo Profile Utilities (Page 71) Maintenance (Page 77) Wear (Page 79)	
Select Analog Output (Page 78)	
Self Test (Page 78) Loop Test (Page 78)	
Configuration Flag Reset (Page 78) Master Reset (Page 79)	
HART Communication (Page 79)	

7.1.6.1 Echo profile utilities

Open the menu **Device – Echo Profile Utilities** and click on the appropriate tab for easy access to:

- Echo profile (Page 72)
- View Saved Echo Profiles (Page 72)
- TVT Shaper (Page 73)
- Auto False Echo Suppression (Page 74)
- Echo Setup (Page 76)

7.1.6.2 Echo profile

Note

- Double click on each axis to see the Xscale and Data Scale values.
- To zoom in to a section of the profile, left-click and drag a marquee around it. Right click inside the window to zoom out.
- Expand or compress the x and/or y axes:
  - Left-click on the axis and drag in either direction to reposition the low end of the scale.
  - Right-click on the axis and drag in either direction to reposition the high end of the scale.
- After saving a profile click on **OK**, not the **x** button, to close the Echo Profile Utilities window, otherwise the profile will not be saved.

- In the **Echo Profile Utilities** window click the **Echo Profile** tab.
- Initial profile graph is blank upon entry to dialog. Click **Measure** to update the profile.
- It is recommended to use the **Detailed** resolution view of the echo profile for troubleshooting. For faster and more coarse views, the **Standard** resolution may be used.
- Click **Save** and in the new window enter a name and click **OK**.
- Click **OK** to exit.

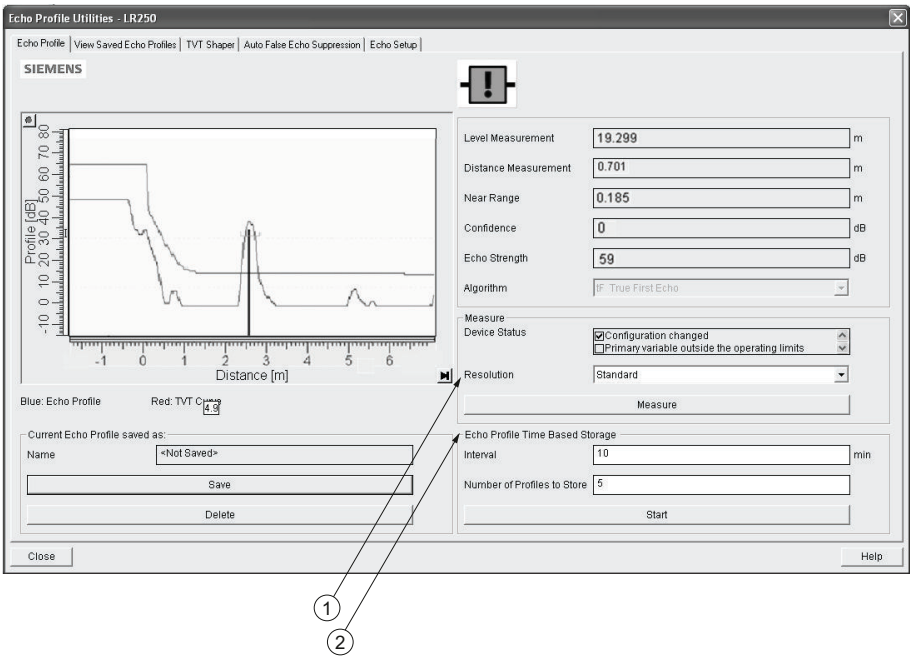

① Resolution

② Echo Profile Time Based Storage

7.1.6.3 View saved echo profiles

To view a saved profile, click on the tab **View Saved Echo Profiles**.

Echo profile data logging

You can store up to 60 profiles at a selected interval (maximum 60 minutes). Inside Echo Profile Utilities, in the **Echo Profile Time Based Storage** window:

- Enter the desired interval between stored profiles.
- Enter the maximum number of profiles to be stored (maximum 60).
- Click on **Start**. A message appears warning of the time delay and warning that all previous saved profiles will be overwritten. Click on **OK** to proceed. The new profiles will be saved with their date and time.
- Click on the tab **View Saved Echo Profiles** to view the stored profiles.

7.1.6.4 TVT Shaper

Note

Double click on each axis to see the X scale and data scale values. Right-click or Left-click on the axis and drag to reposition the scale.

This feature allows you to manually adjust the TVT to avoid false echoes caused by obstructions. For an explanation see Auto False Echo Suppression (Page 228).

Open the menu **Device – Echo Profile Utilities** and click the tab **TVT Shaper**.

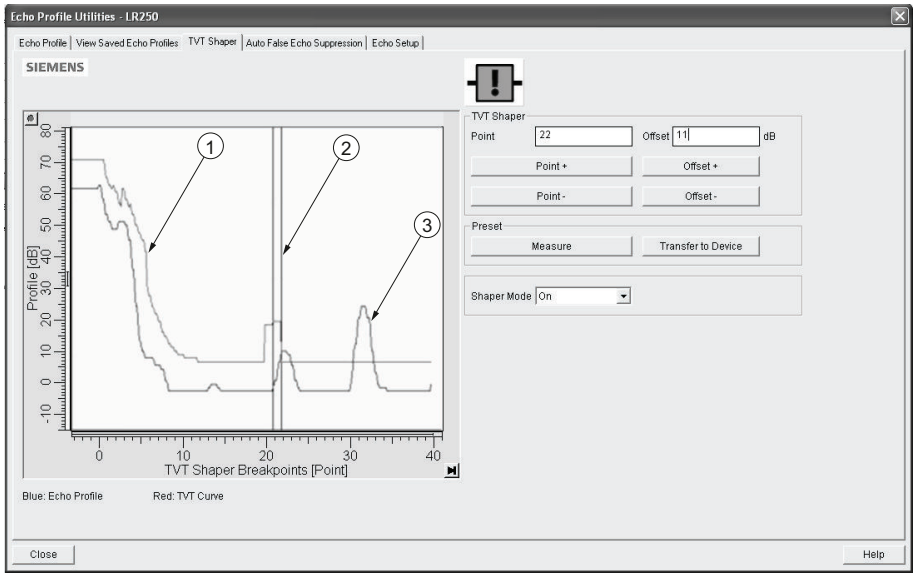

① TVT
② Cursor
③ Echo profile

- Initial profile graph is blank upon entry to dialog. Click on **Measure** to view and upload the current TVT from device.
- Change the position of the cursor on the TVT using the **Point+** and **Point–** buttons: raise and lower the TVT using **Offset+** and **Offset-**.

- Alternatively, enter values for **Point** and **Offset** directly into the dialog boxes.
- Click on **Transfer to Device**.

7.1.6.5 Auto false echo suppression

Note

- Ensure material level is below all known obstructions when using Auto False Echo Suppression to learn the echo profile. An empty or almost empty vessel is recommended.
- Note the distance to material level when learning the echo profile, and set Auto False Echo Suppression Range to a shorter distance to avoid the material echo being screened out.
- Set Auto False Echo Suppression and Auto False Echo Suppression Range during startup, if possible.
- If the vessel contains an agitator it should be running.
- Before adjusting these parameters, rotate the device for best signal (lower false-echo amplitude).

If you have a vessel with known obstructions, use Auto False Echo Suppression to prevent false echo detection. This feature can also be used if the device displays a false high level, or the reading is fluctuating between the correct level and a false high level.

The device learns the echo profile over the whole measurement range and the TVT is shaped around all echoes present at that moment. See Auto False Echo Suppression (Page 228) for a more detailed explanation.

The learned TVT will be applied over a specified range. The default TVT is applied over the remainder of the measurement range.

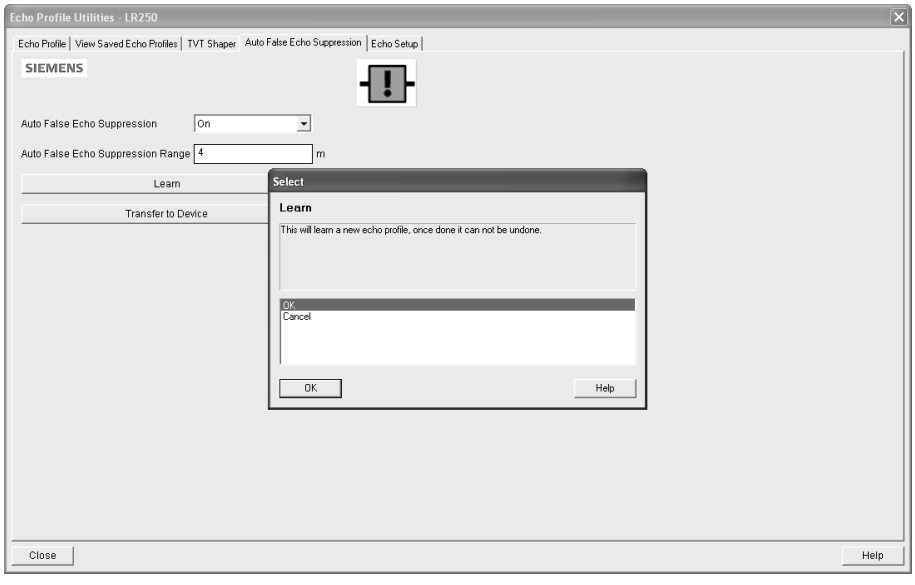

1. Make sure the material level is below all known obstructions.
2. Determine **Auto False Echo Suppression Range**. Measure the actual distance from the sensor reference point to the material surface using a rope or tape measure. Subtract 0.5 m (20") from this distance, and use the resulting value.
3. Open the menu **Device – Echo Profile Utilities** and click on the tab **Auto False Echo Suppression**.
4. Make sure **Auto False Echo Suppression Range** is **On**.
5. Enter the value for **Auto False Echo Suppression Range.**
6. Click **Learn**. The message appears: **'This will learn a new echo profile. Once done it cannot be undone'**. Click **OK**.
7. Once Auto TVT is complete click **Transfer to Device**. To exit click **Close**. Auto TVT is enabled and the learned TVT will be used.
8. To turn **Auto False Echo Suppression** off or on, reopen the **Auto False Echo Suppression** window, change the Auto False Echo Suppression to **Off** or **On**, click on **Transfer to Device.**

Before Auto False Echo Suppression

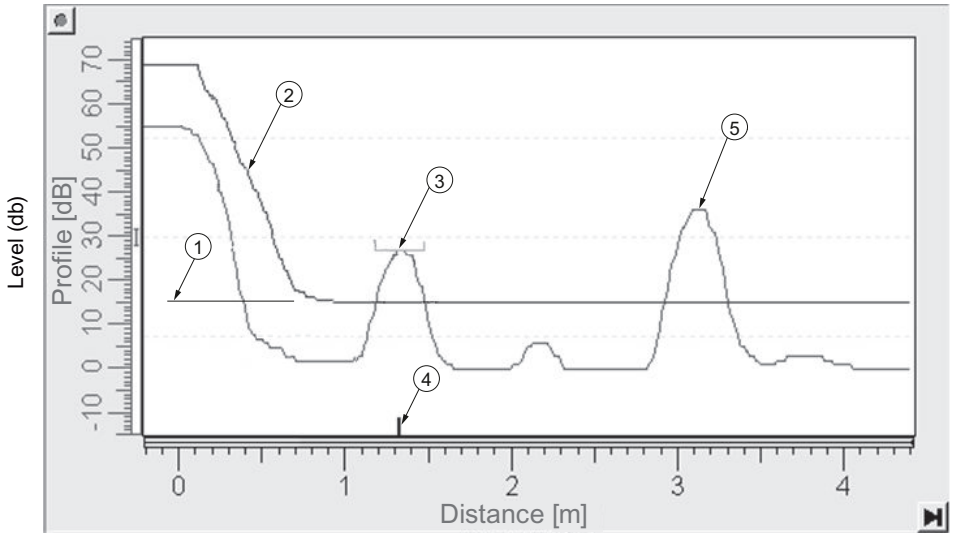

①	TVT Hover Level	④	Echo marker
②	Default TVT	⑤	Material level
③	False echo		

After Auto False Echo Suppression

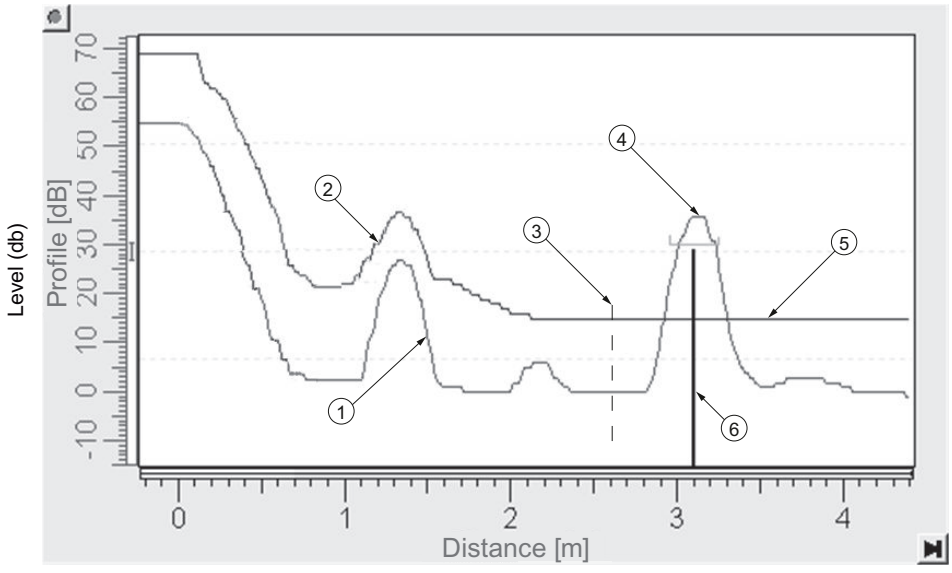

①	False echo	④	Material level
②	Learned TVT	⑤	Default TVT
③	Auto False Echo Suppression Range	⑥	Echo marker

7.1.6.6 Echo setup

Provides quick access to echo selection, filtering, and response rate parameters.

Open the menu **Device – Echo Profile Utilities** and click on **Echo Setup**.

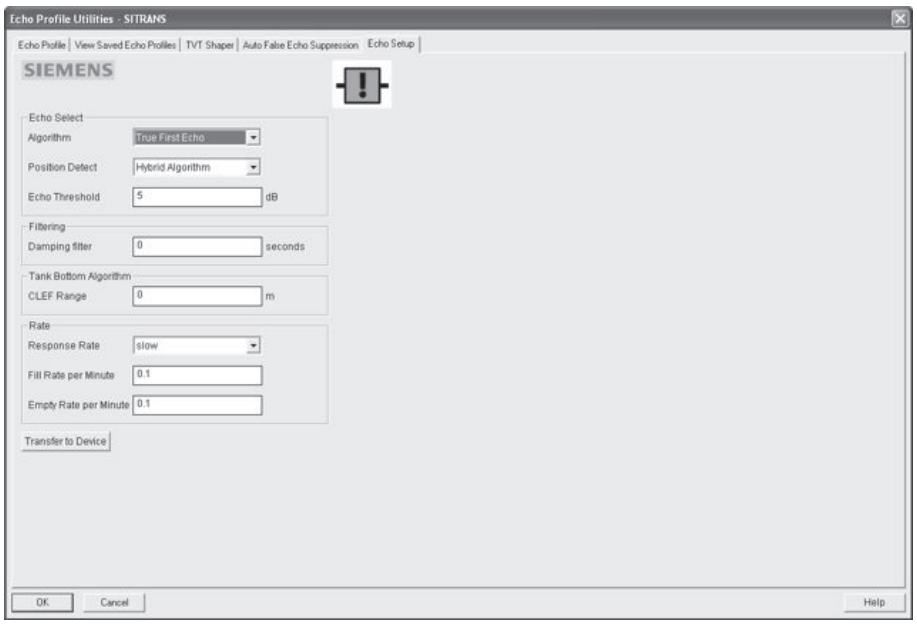

7.1.6.7 Maintenance

You can set schedules and reminders for:

- device maintenance based on its projected lifetime
- sensor maintenance based on its projected lifetime
- service
- calibration

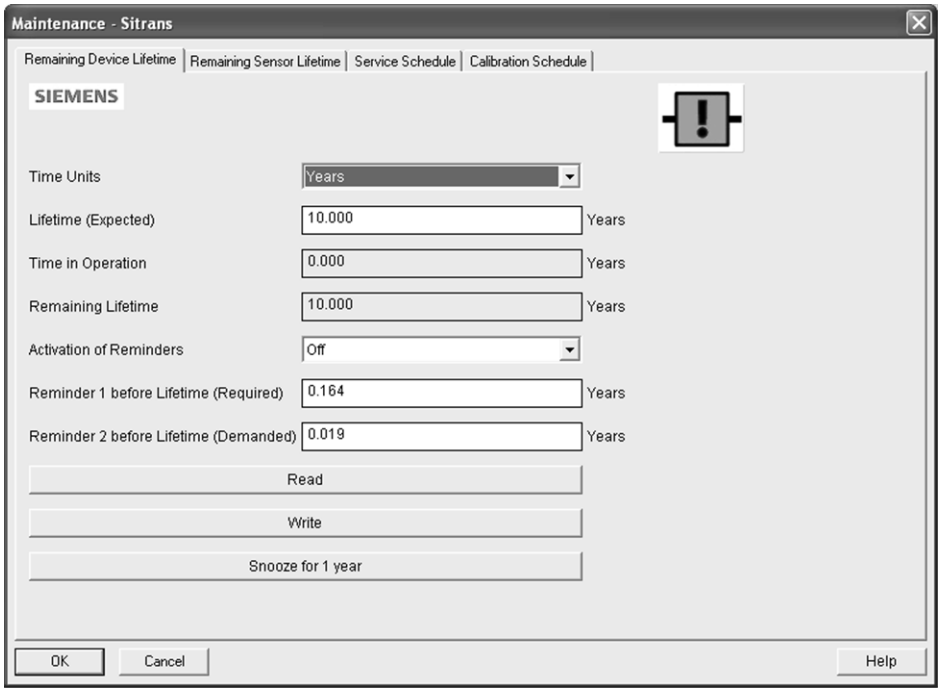

To set Device/Sensor Maintenance schedules:

1. Open the menu **Device – Maintenance**, and click on the **Remaining Device/Sensor Lifetime** tab.
2. Modify desired values, and if desired, set reminders for either or both of **Reminder 1 before Lifetime (Required)**/**Reminder 2 before Lifetime (Demanded)**.
3. Click **Write.**
4. Click **Read**, to see the effects of your modification.
5. Click **Snooze** to add a year to the Total Expected Device Life.

To set Service/Calibration schedules:

1. Open the menu **Device – Maintenance**, and click on the **Service/Calibration Schedule** tab.
2. Modify desired values and if desired, set reminders for either or both of **Reminder 1 before Lifetime (Required)**/**Reminder 2 before Lifetime (Demanded)**.
3. Click **Write.**

4. Click **Read**, to see the effects of your modification.
5. Click **Service/Calibration Performed** to reset the schedule.

7.1.6.8 Select analog output

Allows you to set the mA Output to report Level, Distance, Space, or Volume. See **Current Output Function (2.6.1.)** for an illustration.

If a volume application is selected, mA Output is automatically set to **Volume**. See Analog Output (Page 230) for more details.

1. Open the menu **Device – Select Analog Output**.
2. **Select Analog Output** window displays the current setting: click **OK**.
3. Select a different setting and click **OK**.
4. **Select Analog Output** window displays the new setting: click **OK**.

7.1.6.9 Self test

Checks memory (RAM and Flash). If there are no errors, returns the message 'Self Test OK.' If errors are found, returns the message 'Self Test Fails'.

Open the menu **Device – Self Test**, select **Yes** and click **OK**.

7.1.6.10 Loop test

Note

The simulated AO (Analog Output) value influences output to the control system.

Allows you to input a simulated value (4 mA, 20 mA, or a user-defined value) in order to test the functioning of the mA connections during commissioning or maintenance of the device. The range is 3.56 mA to 22.6 mA, see **mA Output Value (2.6.6.).**

To simulate a user-defined mA value:

1. Open the menu **Device – Loop Test**.
2. Select **Other**, enter the new value, and click on **OK**. The message 'Field Device fixed at [new value]' appears. Click on **OK**. The Loop Test window remains open.
3. When you are ready to end simulation, select **End** and click on **OK** to return the device to the actual output value.

7.1.6.11 Configuration flag reset

To reset the configuration flag to zero, open the menu **Device – Configuration Flag Reset** and perform a reset.

7.1.6.12 Master reset

Factory Defaults

Factory Defaults resets all parameters to the default settings with the following exceptions:

- **Device Address (5.1.)** remains unchanged if the reset command is sent remotely (via AMS, PDM, DTM, FC375) but is reset to 0 if the reset command is sent via LUI.
- **Write Protect (6.2.1.)** and **PIN to Unlock (6.2.2.)**
- **Learned TVT curve, see Auto False Echo Suppression (2.8.7.1)**

1. Open the menu **Device – Master Reset**, select **Yes**, and click on **OK** to perform a reset to Factory Defaults.
2. After the reset is complete upload parameters to the PC/PG. (If you are performing a reset after replacing the device with a different instrument, do not upload parameters to the PC/PG).

7.1.6.13 Wear

Reports the number of hours the device has been operating, and the number of times it has been powered up.

Open the menu **Device – Wear** to view:

- Powered Days
- Power-on Resets

Note

Powered days are whole days only. Fractional days are truncated.

7.1.6.14 HART Communication

Sets the number of request/response preambles (default 5).

The preamble consists of three or more hexadecimal FF characters (all 1s). This allows the receiving modem to get its frequency-detection circuits synchronized to the signal after any pause in transmission.

We recommend you do not change the default value (5).

7.1.6.15 Process variables

To compare outputs in real time open the menu **View – Process Variables** and click on **Overview** to see reading (level, space, distance, volume); analog output; device status; and current electronics temperature.

To see highest and lowest electronics temperatures, navigate to **Level Meter > Maintenance and Diagnostics > Electronics Temperature**.

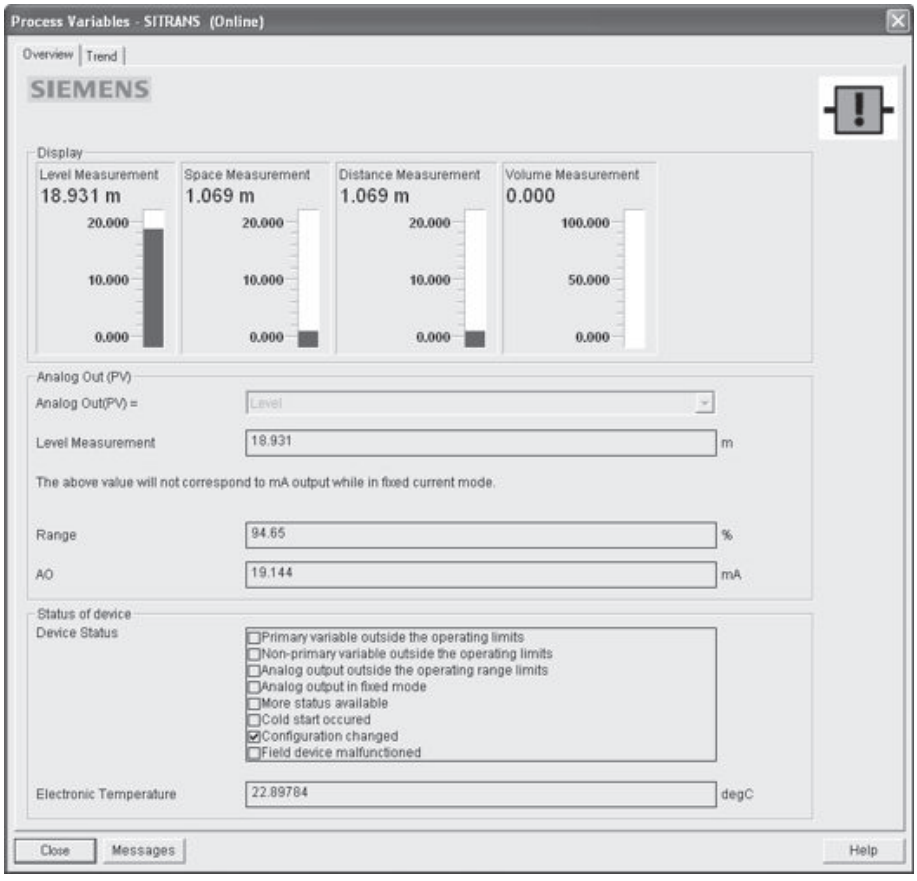

7.1.6.16 Trend

Open the menu **View – Process Variables** and click on **Trend**.

Four trend lines can be monitored (distinguished by color in SIMATIC PDM):

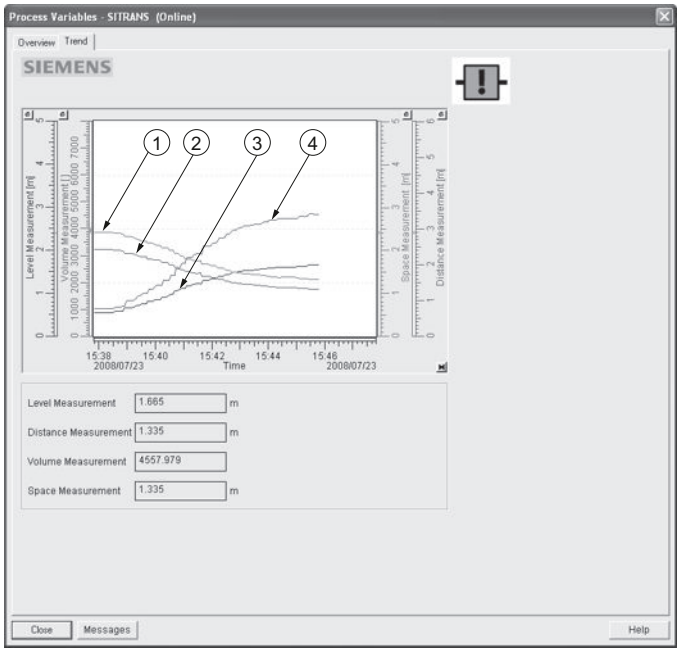

① Space
② Distance
③ Level
④ Volume

7.1.6.17 Device status

Open the menu **View – Device Status** to view Diagnostics, Device Status, Hardware/ Firmware (HW/FW) Status, and Maintenance status.

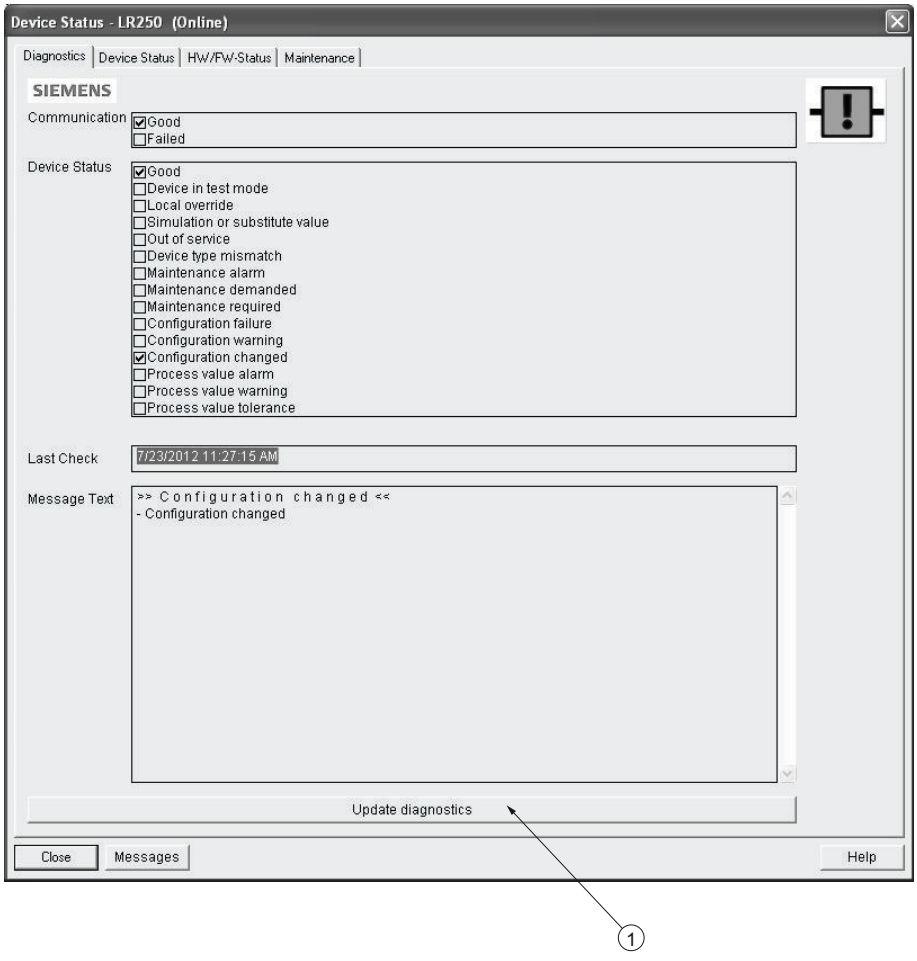

① update diagnostics

In the Diagnostics window, click on **Update diagnostics** to update diagnostic information and refresh linked icons.

7.1.6.18 Update

Open the menu **View – Update** to refresh the screen.

7.1.6.19 Security

A password option protects security and communication control parameters from modification by a maintenance user.

When you open a project the **User** dialog window provides two options: maintenance or specialist. If a password has been set it will not be possible to open the project as a specialist

without it. A maintenance user will be able to open the project without a password but will not have access to security and communication control parameters.

1. Open a project, double-click on the device icon, and in the **User** window select **Specialist**.
2. Open the menu **Options – Settings** and click on the **Password** tab.
3. Enter a new password and re-enter it in the **Confirmation** window. Click on **OK**.

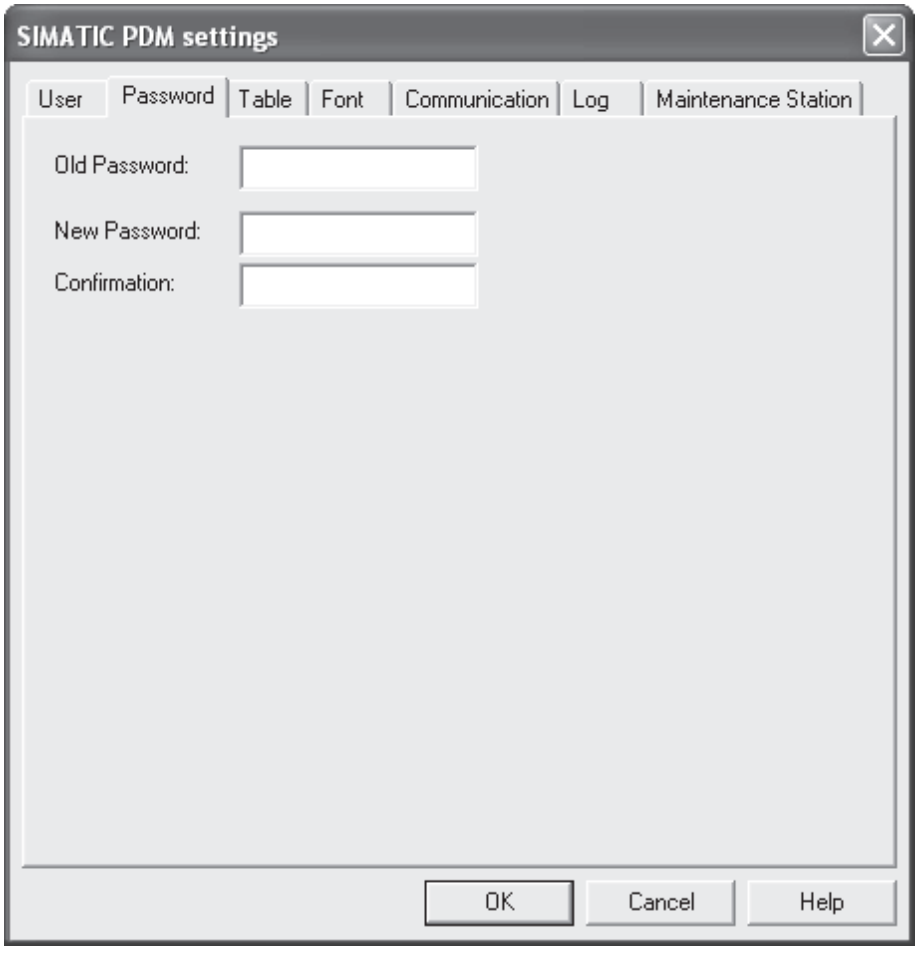

7.2 Operating via AMS Device Manager

AMS Device Manager is a software package that monitors the process values, alarms and status signals of the device. Please consult the operating instructions or online help for details on using AMS Device Manager. You can find more information at:

Emerson (http://www.emersonprocess.com/AMS/)

Application Guides for setting up Siemens HART devices with AMS Device Manager are available on our website:

Process automation (www.siemens.com/processautomation)

7.2.1 Functions in AMS Device Manager

Note

While the device is in PROGRAM mode the output remains fixed and does not respond to changes in the device.

7.2.1.1 AMS function overview

AMS Device Manager monitors the process values, alarms and status signals of the device. It allows you to display, compare, adjust, verify, and simulate process device data.

Parameters organized into three main function groups allow you to configure and monitor the device:

- Configure/Setup
- Device Diagnostics (read only)
- Process Variables (read only)

See AMS Menu Structure (Page 100) for a chart and Changing parameter settings using AMS Device Manager (Page 89) for more details. The menu structure for AMS Device Manager is almost identical to that for the LCD.

7.2.1.2 Features of AMS Device Manager

The graphic interface in the radar device makes monitoring and adjustments easy.

Feature	Function
Quick Start (Page 87)	Device configuration for simple applications
Echo Profile (Page 94)	Echo profile viewing
TVT (Page 94)	Screen out false echoes
Linearization (Page 88)	Volume measurement in an irregular vessel
Process Variables (Page 97)	Monitor process variables and level trend
Security (Page 96)	Protect security and communication parameters from modification by the maintenance user

7.2.1.3 Electronic Device Description (EDD)

The EDDs are linked to the type, version of configuration software, and protocol being used. Select the LR250 AMS EDD for the version of AMS installed. EDDs can be downloaded from our website, see Product page (http://www.siemens.com/LR250).

The HART EDD for LR250 is labeled as supporting AMS Device Manager version 9.5. This EDD is also operational with AMS version 9.0 and 10.1. There is also an application guide that details how to use the Hart Communication Foundation EDDs in AMS version 11.5 and above. There is no EDD for the LR250 for AMS version 10.5 to 11.1.

Please check the product page for updated EDDs and application guide.

7.2.1.4 Configuring a new device

1. Check our website to make sure you have the most recent EDD.
   Product page (http://www.siemens.com/LR250)
   Go to **Support > Software Downloads** and if necessary download it. Save the files to your computer, and extract the zipped file to an easily accessed location.
2. Launch **AMS Device Manager– Add Device Type**, browse to the unzipped EDD file and select it.

7.2.1.5 Startup

1. **Launch AMS Device Manager**. (Application Guides for setting up HART devices with AMS Device Manager can be downloaded from our website:
   Product page (http://www.siemens.com/LR250)
2. In **Device Connection View** right-click on the device icon and select **Scan Device** to upload parameters from the device.
3. Double click the device icon to open the startup screen. The startup screen shows device identification details, and a navigation window on the left-hand side of the screen.

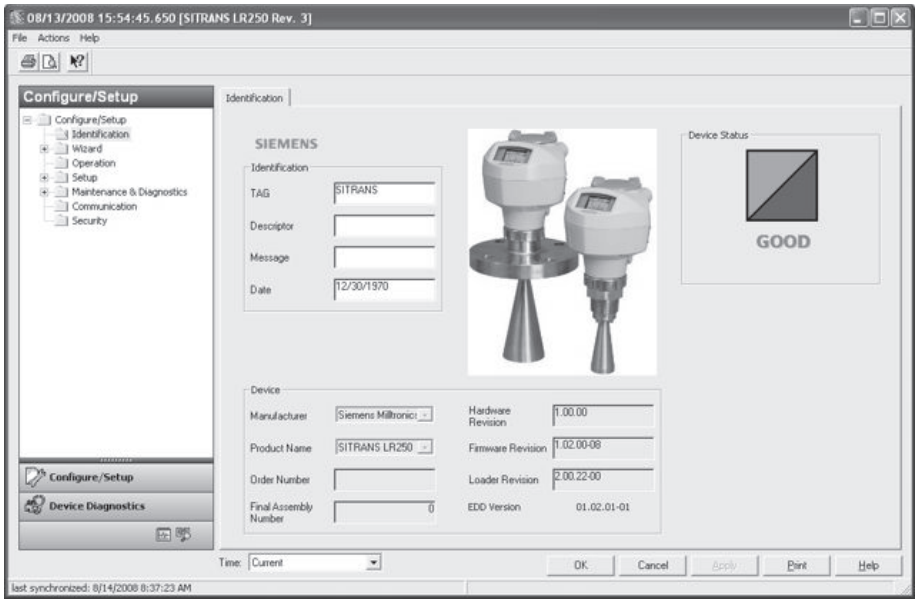

Master reset

Note

Device Address (5.1.) remains unchanged if the reset command is sent remotely (via AMS, PDM, DTM, FC375) but is reset to 0 if the reset command is sent via HMI.

- Navigate to **Configure/Setup > Operation**
- In the **General** field click on **Master Reset** and accept the option **Factory Defaults**.

7.2.1.6 Pull-down menu access

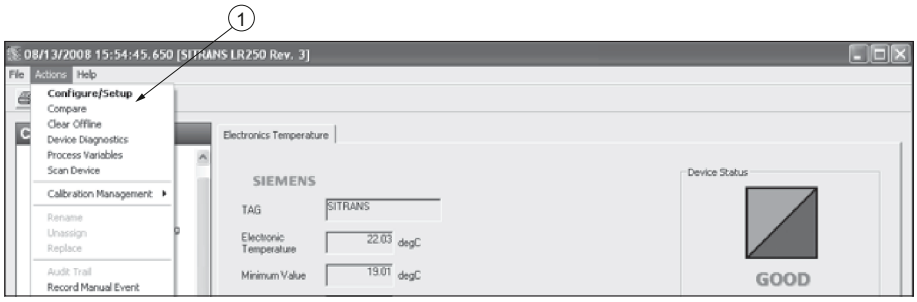

① Action menu items

A pull-down menu under **Actions** gives alternative access to several features.

Scan Device

- Open the menu **Actions – Scan Device**.
- **Scan Device** uploads parameters from the device (synchronizes parameters).

7.2.1.7 Device configuration

1. Navigate to **Configure/Setup > Operation** and click to open the dialog window.
2. In the **General** field, click on **Master Reset** and perform a reset to Factory Defaults.
3. Open the pull-down menu **Actions – Scan Device** to synchronize parameters (upload parameters from the device to AMS).
4. Configure the device via the Quick Start wizard.

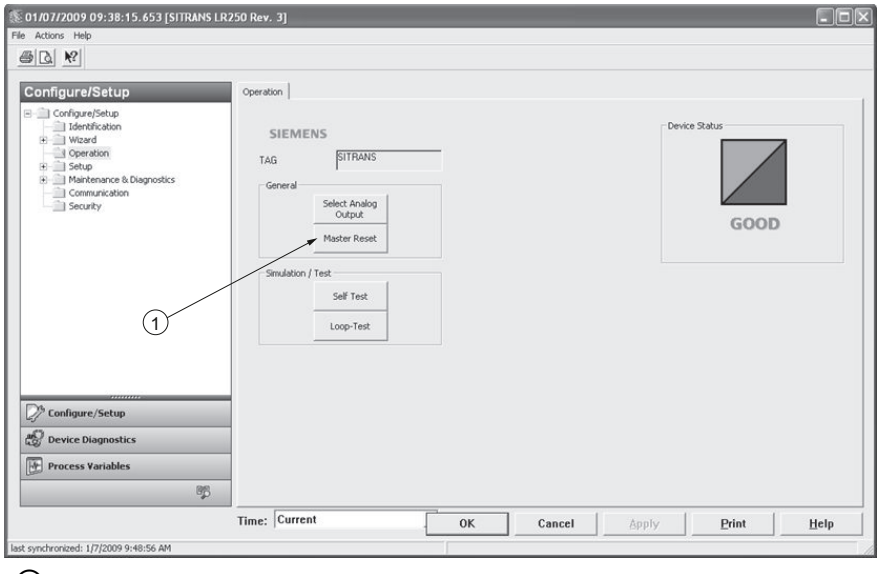

① Master reset

7.2.1.8 Quick Start Wizard via AMS Device Manager

Note

- A reset to Factory Defaults should be performed before running the Quick Start Wizard if device has been used in a previous application. See Master Reset (Page 85).
- The layout of the dialog boxes shown may vary according to the resolution setting for your computer monitor.
- At each step, you can accept the default values without modification and click on the next step to proceed.
- After modifying parameters click on **Apply** inside the Quick Start window to write the new values to the device.
- Click on **OK** only if you wish to update all parameters to the device and close AMS.

A Wizard provides an easy 5-step Quick Start procedure that configures the device for a simple application.

Quick Start

Step 1 – Identification

1. Navigate to **Configure/Setup > Wizard > Quick Start**.
2. Click on **Step 1**.
3. You can accept the default values without modification. (Description, Message, and Installation Date fields can be left blank.) If desired, make changes then click on **Apply**.

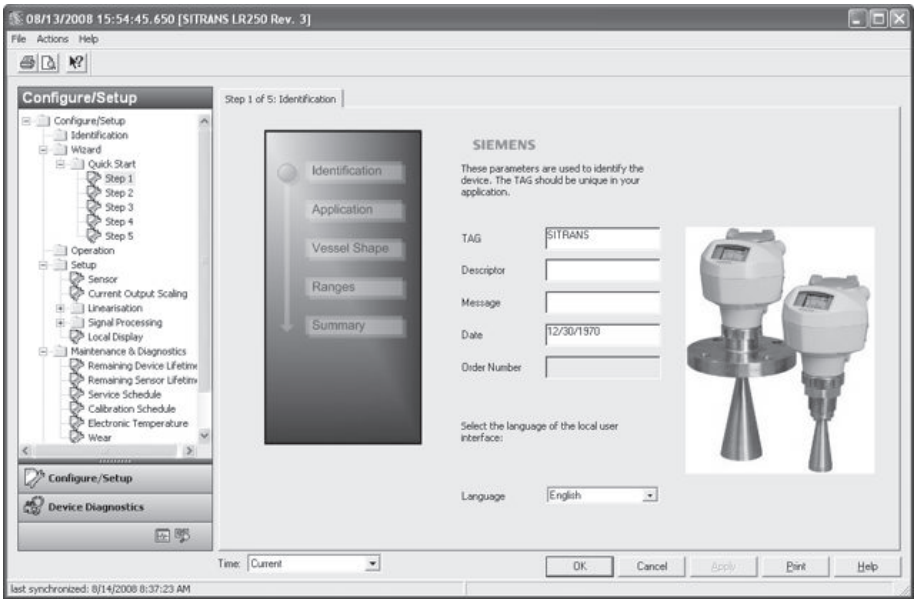

Step 2 – Application

1. Click on **Step 2**.
2. Select the application type (Level/vessel, Level/stillpipe, Level/bypass pipe, Volume/vessel, Volume/stillpipe, or Volume/bypass pipe) and the material (Liquid or Low dielectric liquid).
3. Click on **Apply**.

Step 3 – Vessel Shape

1. Click on **Step 3**.
2. Select a predefined vessel shape. To describe a more complex shape see Linearization (Page 88).
3. Click on **Apply**.

Step 4 – Ranges

1. Click on **Step 4**.
2. Change units if desired (in meters by default).
3. Set High and Low Calibration points.
4. To convert the reading from level to volume enter a value for Maximum Volume.
5. If a vessel shape with parabolic ends has been selected, set dimensions **A** and **L**.
6. Click on **Apply**.

Step 5 – Summary

Check parameter settings, and click on **Cancel** to abort, or **Apply** to transfer values to the device.

Linearization

You can use the linearization feature to define a more complex vessel shape and enter up to 32 level breakpoints where the corresponding volume is known. The values corresponding to 100% and 0% levels must be entered. The breakpoints can be ordered from top to bottom, or the reverse.

Using linearization via the Quick Start wizard

Navigate to **Configure/Setup > Wizard > Quick Start**.

In **Step 1 – Identification,** make any desired modifications and click on **Apply**.

In **Step 2 – Application,** select a level application and liquid as a material.

In **Step 3 – Vessel Shape**, choose the vessel shape option **Linearization Table**.

In **Step 4 – Ranges**, enter a value for maximum volume.

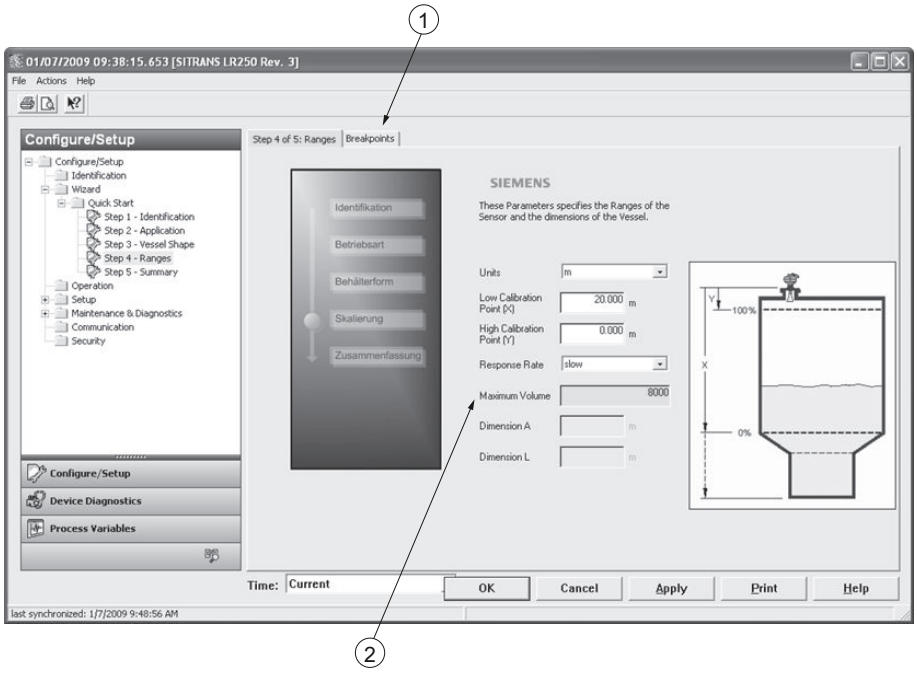

① Breakpoints

② Maximum volume

1. Click on the **Breakpoints** tab and enter values for level and volume for up to **32** breakpoints.
2. Navigate to **Configure/Setup > Setup > Linearization** and click on **Characteristic** to preview the characteristic curve of the vessel breakpoints. (The conversion will function correctly even if not all breakpoints are entered, but the curve will display correctly only if all breakpoints are entered.)
3. In **Step 5 – Summary**, check parameter values. Click on the appropriate step menu to return and revise values, or click on a different menu to exit **Quick Start.**

Changing parameter settings using AMS Device Manager

Note

For a complete list of parameters, see Parameter Reference (Page 107).

For more detailed explanations of the parameters listed below see the pages referenced.

1. Adjust parameter values in the parameter value field in Configure/Setup view, then click on **Apply** to write the new values to the device. The parameter field will display in yellow until the value has been written to the device.
2. Click on **OK** only if you wish to update all parameters and exit AMS.

Operation

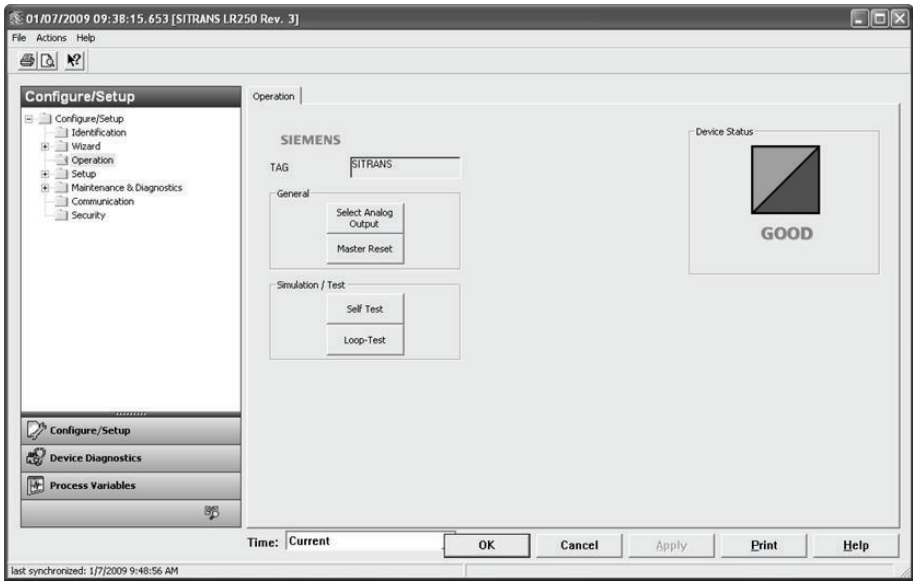

Navigate to **Configure/Setup > Operation** and click on **Operation** to open the dialog window for access to:

General

- Select Analog Output [see Select Analog Output (Page 78)]
- Master Reset [see Master Reset (Page 79)]

Simulation/Test

- Self Test [see Self Test (Page 78)]
- Loop Test [see Loop Test (Page 78)]

Setup

Note

For more detailed explanations of the parameters listed below see the pages referenced.

Sensor

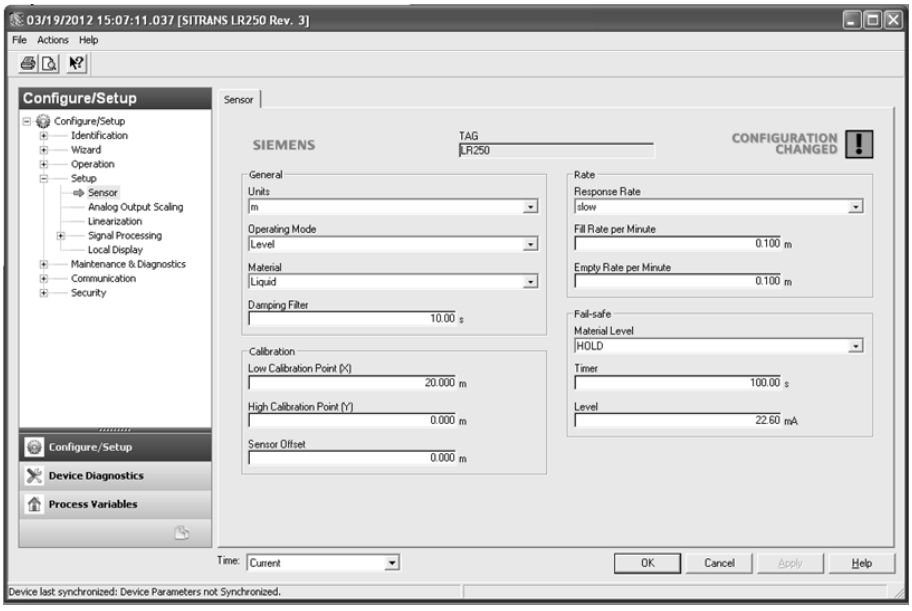

Navigate to **Configure/Setup > Setup** and click on **Sensor** for access to:

General [see Sensor (2.2.)]

- Units
- Operating Mode
- Material
- Damping Filter

Calibration [see Calibration (2.3.)]

- Low Calibration Point
- High Calibration Point
- Sensor Offset

Rate [see Rate (2.4.)]

- Response Rate
- Fill Rate per Minute
- Empty Rate per Minute

Fail-safe [see Fail-safe (2.5.)]

- Material level
- Timer
- Level

Analog Output Scale

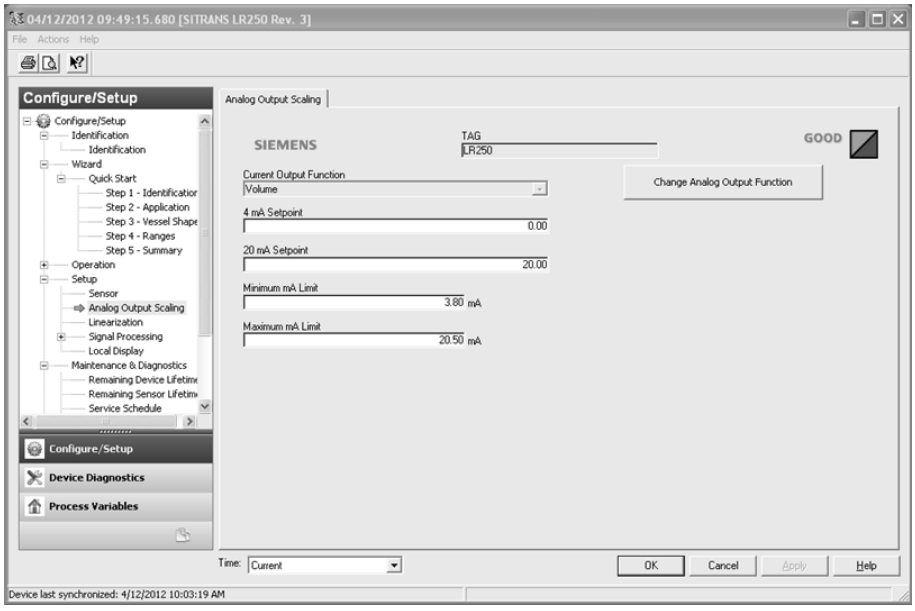

Navigate to **Configure/Setup > Setup** and click on **Analog Output Scaling** for access to: Analog Output Scaling [see **Analog Output Scaling (2.6.)**]

- Current Output Function
- 4 mA Setpoint
- 20 mA Setpoint
- Minimum mA Limit
- Maximum mA Limit

Signal Processing

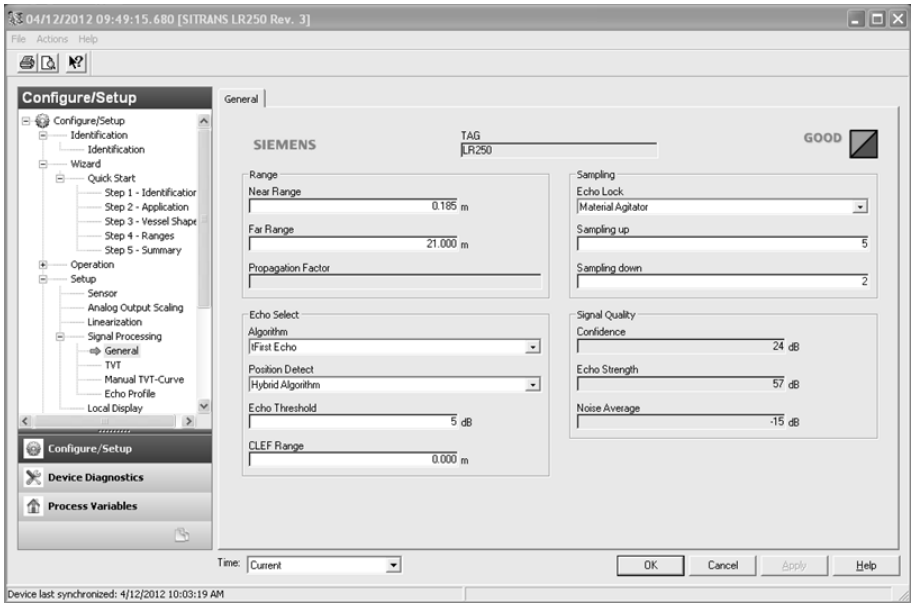

General

Navigate to **Configure/Setup > Setup > Signal Processing** and click on **General** for access to:

Range [see Signal Processing (2.8.)]

- Near Range
- Far Range
- Propagation Factor

Echo Select [see Echo Select (2.8.4.)]

- Algorithm
- Position Detect
- Echo Threshold
- CLEF Range

Sampling [see Sampling (2.8.5.)]

- Echo Lock
- Sampling Up
- Sampling Down

Signal Quality

- Confidence
- Echo Strength
- Noise Average

TVT

Modify the TVT to screen out false echoes. See Auto False Echo Suppression (2.8.7.1.) (Page 228).

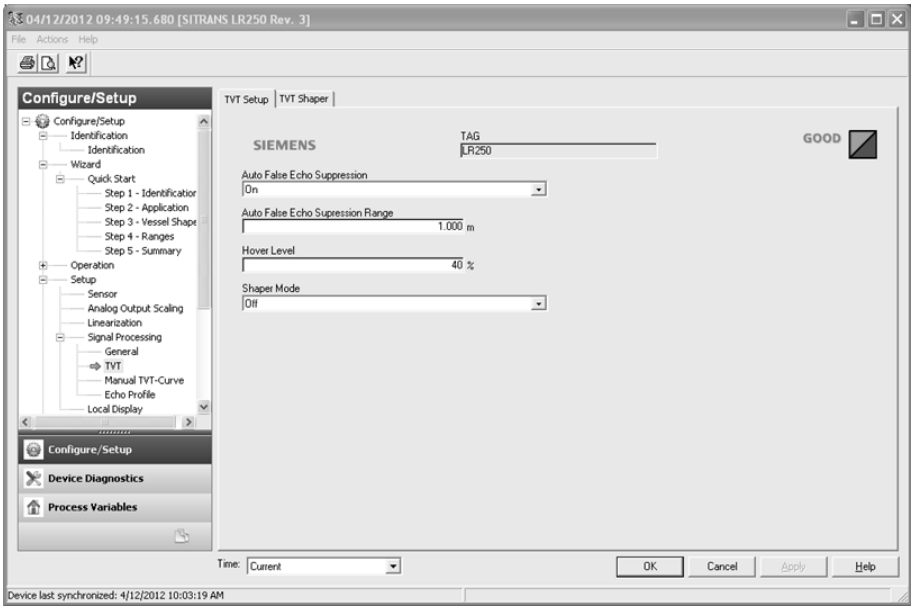

Navigate to **Configure/Setup > Setup > Signal Processing** and click on **TVT**. Click on one of the two tabs to access the parameters listed:

TVT Setup [see TVT setup (2.8.7.)]

- Auto False Echo Suppression
- Auto False Echo Suppression Range
- Hover Level
- Shaper Mode

TVT Shaper

- Shaper breakpoints 1 to 40. (Turn **TVT Setup/Shaper Mode** on to activate.)

Manual TVT Curve

Displays the effects of the TVT shaper modifications. Navigate to **Configure/Setup > Setup > Signal Processing** and click on **Manual TVT Curve**.

Echo Profile

- Navigate to **Configure/Setup > Setup > Signal Processing** and click on **Echo Profile**.
- Select **Standard** operation for faster display.

Local Display

Navigate to **Configure/Setup > Setup > Local Display** for access to:

- Language
- LCD Fast Mode [see **LCD Fast Mode (4.9.)**]
- LCD Contrast [see **LCD Contrast (4.10.)**]

7.2.2 Maintenance and diagnostics

Navigate to **Maintenance and Diagnostics** for access to:

Remaining Device Lifetime [see Remaining Device Lifetime (4.2.)]

- Lifetime (expected)
- Time in Operation
- Remaining Lifetime
- Activation of Reminders
- Reminder 1 before Lifetime (Required)
- Reminder 2 before Lifetime (Demanded)

Remaining Sensor Lifetime [see Remaining Sensor Lifetime (4.3.)]

- Lifetime (expected)
- Time in Operation
- Remaining Lifetime
- Activation of Reminders
- Reminder 1 before Lifetime (Required)
- Reminder 2 before Lifetime (Demanded)

Service Schedule [see Service Schedule (4.4.)]

- Service Interval
- Time Since Last Service
- Time Until Next Service
- Activation of Reminders
- Reminder 1 before Service (Required)
- Reminder 2 before Service (Demanded)

Calibration Schedule [see Calibration Schedule (4.5.)]

- Calibration Interval
- Time Since Last Calibration
- Time Until Next Calibration

- Activation of Reminders
- Reminder 1 before Calibration (Required)
- Reminder 2 before Calibration (Demanded)

Electronic Temperature

- Electronic Temperature
- Lowest Value
- Highest Value

Wear

- Powered Days
- Poweron Resets

See Wear via SIMATIC PDM (Page 79) for more detail.

7.2.3 Communication

Navigate to **Communication** to read the following:

Tag; Manufacturer's ID; Device ID; Product ID; Device Revision; EDD Revision; Universal Command Revision

7.2.4 Security

Navigate to **Configure/Setup > Security** to access:

Remote Access [see Remote Access (6.1.)]

Note

If access control is changed to limit remote access, it can only be reset via the handheld programmer. See **Access Control (6.1.1.)**.

- Write Protect (read only)
- Access Control

Local Access [see Local Access (6.2.)]

- Local Write Protected
- PIN to Unlock

See also Password Protection (Page 98).

7.2.5 Device Diagnostics

Click on the **Device Diagnostics** bar at the bottom of the navigation window, for access to:

Device Status

Hardware/Firmware Status

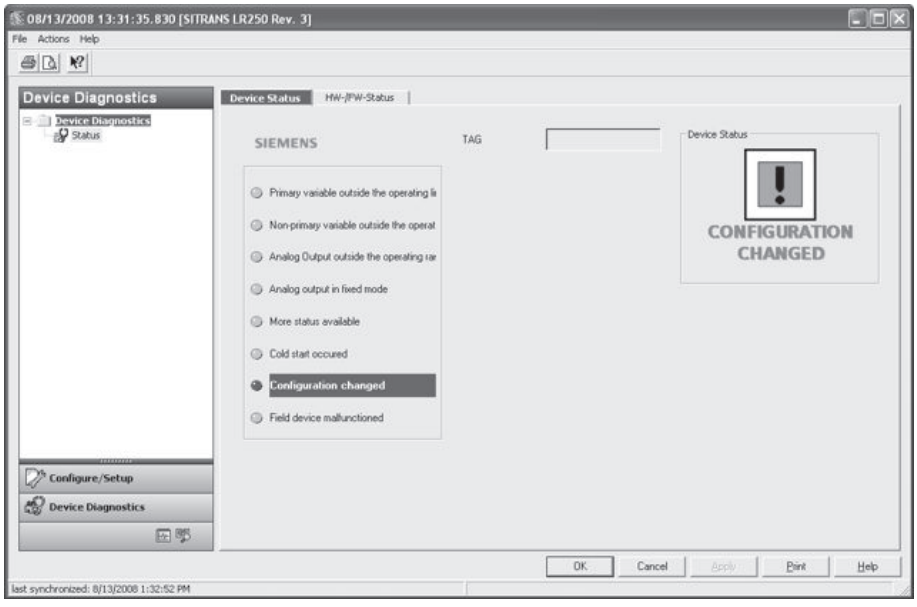

7.2.5.1 Process variables

To compare outputs in real time click on **Process Variables** at the bottom of the navigation window for access to:

Process Variables

- Values (level, volume, space, distance)
- Analog Output
- Trend View

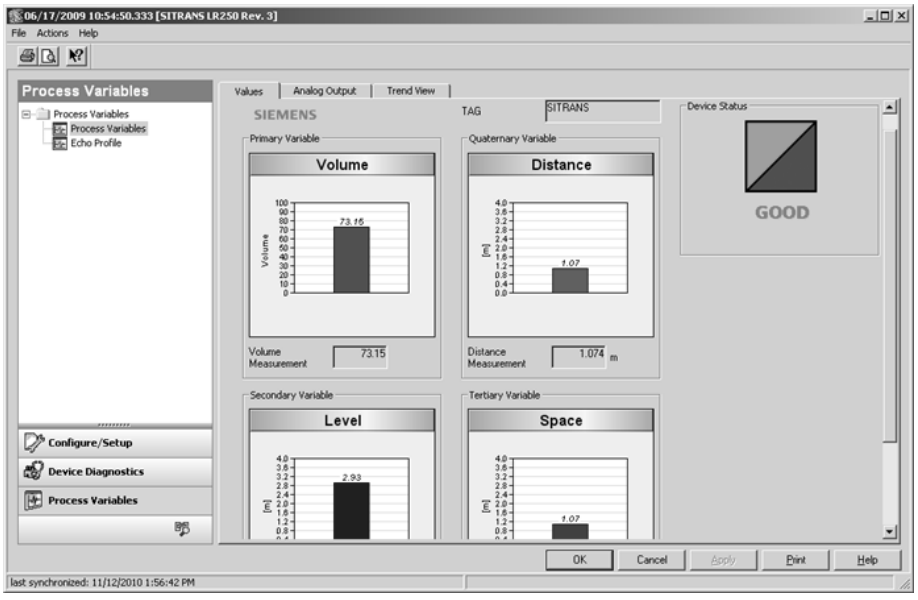

Echo Profile

7.2.5.2 Password protection

An AMS Device Manager administrator can configure the user to require a password. The use of passwords is recommended. A password should be assigned to the ’admin’ username immediately after installing AMS Device Manager.

Each user is given an AMS Device Manager username and password and required to enter them when they start AMS Device Manager. Access to functions depends on the level of permissions granted.

Login types

- standard, local, or domain

A standard user can change their password in AMS Device Manager. A Local or Domain Windows user cannot change their password using AMS Device Manager and must request their network administrator to do so.

7.2.5.3 User Manager utility

Usernames, passwords, and permissions, are assigned to users by an AMS Device Manager administrator, using the User Manager utility on the Server Plus Station. Only a user with AMS Device Manager System Administration rights can log in to User Manager.

To configure a new user/edit existing user:

1. From the Windows taskbar select: **Start > AMS Device Manager > User Manager**.
2. In the User Manager window click on **Add User**.

The Add User Wizard dialog allows you to:

- select a user type, standard (AMS Device Manager) or Window user.
- enter the username and password, and set permissions
- edit existing users

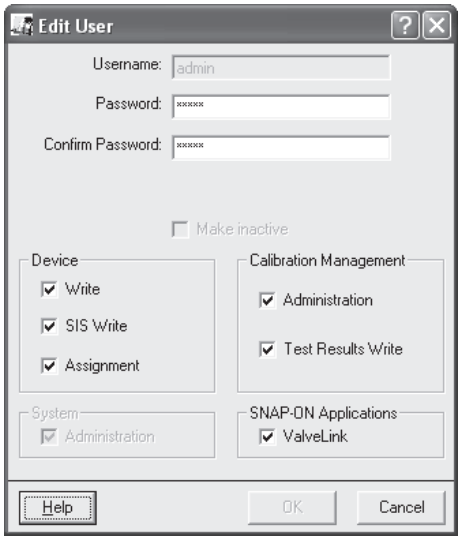

7.2.6 AMS menu structure

- **Configure/Setup**
  - **Identification**
    - **Identification**
      - Identification
        - Tag
        - Descriptor
        - Message
        - Date
      - Device
        - Manufacturer
        - Product Name
        - Order Number
        - Final Assembly Number
        - Hardware Revision
        - Firmware Revision
        - Loader Revision
        - EDD version
      - Device Status
  - **Wizard**
    - **Quick Start**
      - Step 1 (Identification)
      - Step 2 (Application)
      - Step 3 (Vessel Shape)
      - Step 4 (Ranges)
      - Step 5 (Summary)
  - **Operation**
    - **Operation**
      - Tag
      - General
        - Select Analog Output
        - Master Reset
      - Simulation/Test
        - Self Test
        - Loop Test
      - Device Status
  - **Setup**
    - **Sensor**
      - Sensor
        - Tag
        - General
          - Units
          - Operating Mode
          - Material
          - Damping Filter
        - Calibration
          - Low Calibration Point
          - High Calibration Point
          - Sensor Offset

- **Configure/Setup (continued)**
  - **Setup/Sensor (continued)**
    - Rate
      - Response Rate
      - Fill Rate per Minute
      - Empty Rate per Minute
    - Fail-safe
      - Material Level
      - Timer
      - Level
    - Device Status
  - **Analog Output Scaling**
    - Analog Output Scaling
      - Tag
      - Current Output Function
      - 4 mA Setpoint
      - 20 mA Setpoint
      - Minimum mA Limit
      - Maximum mA Limit
      - Device Status
  - **Linearization**
    - Vessel Shape
      - Tag
      - Vessel Shape
        - Vessel Shape
      - Vessel Dimensions
        - Maximum Volume
        - Dimension A
        - Dimension L
      - Device Status
    - Breakpoints
      - Tag
      - Levels and Volume breakpoints
      - Device status
      - Vessel Shape
  - **Signal Processing**
    - **General**
      - General
        - Tag
        - Range
          - Near Range
          - Far Range
          - Propogation Factor
        - Echo Select
          - Algorithm
          - Position Detect
          - Echo Threshold
          - CLEF Range
        - Sampling
          - Echo Lock
          - Sampling Up
          - Sampling Down
        - Signal Quality
          - Confidence
          - Echo Strength
          - Noise average
        - Device Status

- **Configure/Setup (continued)**
  - **Signal Processing (continued)**
    - **TVT**
      - TVT Setup
        - Tag
        - Auto False Echo Suppression
        - Auto False Echo Suppression Range
        - Hover Level
        - Shaper Mode
        - Device Status
      - TVT Shaper
        - Tag
        - Breakpoints
        - Device Status
        - Shaper Mode
    - **Manual TVT Curve**
      - Manual TVT diagram
        - Tag
        - Shaper Mode
    - **Echo Profile**
      - Echo Profile
        - Tag
        - Device Status
      - Echo Profile Parameters
        - Level Measurement
        - Distance Measurement
        - Confidence
        - Near Range
  - **Local Display**
    - **Local Display**
      - Tag
      - Language
      - LCD Fast Mode
      - LCD Contrast
      - Device Status
- **Maintenance and Diagnostics**
  - **Remaining Device Lifetime**
    - **Device Lifetime**
      - Tag
      - Lifetime (expected)
      - Time in Operation
      - Remaining Lifetime
      - Activation of Reminders
      - Reminder 1 before Lifetime (Required)
      - Reminder 2 before Lifetime (Demanded)
      - Device Status
  - **Remaining Sensor Lifetime**
    - **Sensor Lifetime**
      - Tag
      - Lifetime (expected)
      - Time in Operation
      - Remaining Lifetime
      - Activation of Reminders
      - Reminder 1 before Lifetime (Required)
      - Reminder 2 before Lifetime (Demanded)
      - Device Status

- **Maintenance and Diagnostics (continued)**
  - **Service Schedule**
    - **Service Schedule**
      - Tag
      - Service interval
      - Time Since Last Service
      - Time Until Next Service
      - Activation of Reminders
      - Reminder 1 before Service (Required)
      - Reminder 2 before Service (Demanded)
      - Device Status
  - **Calibration Schedule**
    - **Calibration Schedule**
      - Tag
      - Calibration Interval
      - Time Since Last Calibration
      - Time Until Next Calibration
      - Activation of Reminders
      - Reminder 1 before Calibration (Required)
      - Reminder 2 before Calibration (Demanded)
      - Device Status
  - **Electronic Temperature**
    - **Electronic Temperature**
      - Tag
      - Electronic Temperature
      - Lowest Value
      - Highest Value
      - Device Status
  - **Wear**
    - **Wear**
      - Tag
      - Powered Days
      - Poweron Resets
      - Device Status
- **Communication**
  - **Communication**
    - **Communication**
      - Tag
      - Manufacturer's ID
      - Device ID
      - Product ID
      - Device Revision
      - EDD Revision
      - Universal Command Revision
      - Device Status
- **Security**
  - **Security**
    - **Remote Access**
      - Write Protect
      - Access Control
    - **Remote Access**
      - Local Write Protected
      - PIN to Unlock
    - **Device Status**

7.3 Operating via FDT (Field Device Tool)

FDT is a standard used in several software packages designed to commission and maintain field devices. Two commercially available FDTs are PACTware and Fieldcare.

Functionally FDT is very similar to PDM. See Operating via SIMATIC PDM (Page 63) for more detail.

- To configure a field device via FDT you need the DTM (Device Type Manager) for the device.
- To configure a field device via SIMATIC PDM, you need the EDD (Electronic Data Description) for the device.

7.3.1 Device Type Manager (DTM)

A DTM is a type of software that 'plugs into' FDT. It contains the same information as an EDD but an EDD is independent of the operating system.

7.3.2 SITRANS DTM

- SITRANS DTM is an EDDL interpreter developed by Siemens to interpret the EDD for that device.
- To use SITRANS DTM to connect to a device, you must first install SITRANS DTM on your system and then install the device EDD written for SITRANS DTM.
- You can download SITRANS DTM from the Siemens service and support website. Go to Service & Support (http://www.siemens.com/automation/service&support), click on **Product Support**, and drill down to **Product Information/Automation Technology/Sensor systems/Process Instrumentation/Software & Communications**.

7.3.3 The device EDD

The SITRANS LR250 HART EDD for SITRANS DTM can be downloaded from our website:

Product page (http://www.siemens.com/LR250).

Go to **Support > Software Downloads**.

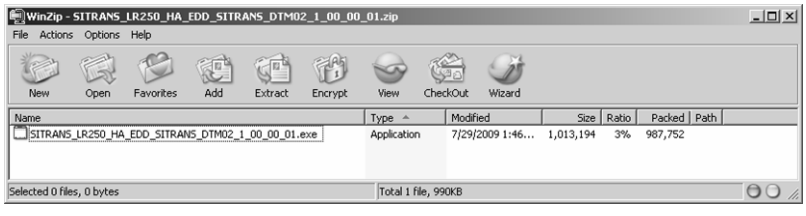

7.3.4 Configuring a new device via FDT

The full process to configure a field device via FDT is outlined in an Application Guide which can be downloaded from our website under **Support > Application Guides**.

Product page (http://www.siemens.com/LR250)

Parameter reference

8

Note

- Parameter names and menu structure are almost identical for SIMATIC PDM and the local user interface (LUI).
- Default settings in the parameter tables are indicated with an asterisk (*) unless explicitly stated.
- **Mode** toggles between **PROGRAM** and **Measurement** Modes.
- For Quick Access to parameters via the handheld programmer, press **Home**, then enter the menu number, for example: **2.2.1.**
- In Navigation mode**, ARROW keys (**) navigate the menu in the direction of the arrow.
- Press **RIGHT arrow** to open **Edit** Mode, or to save a modification.

Parameters are identified by name and organized into function groups. See LCD menu structure (Page 255) for a chart. For AMS Device Manager the structure varies slightly.

Parameters accessible via the handheld programmer are followed by the device menu number in parenthesis. Parameters not followed by a number are accessible only via remote operation.

For more details see:

- Operating via SIMATIC PDM (Page 63)
- Operating via AMS Device Manager (Page 83)

Quick Start (1.)

Wizards provide step-by-step procedures to configure the device, filter out false echoes, and upload and download parameters and firmware to the optional display for easy configuration of multiple devices.

Quick Start Wizard (1.1.)

From measurement screen, press **RIGHT arrow** twice to open the Quick Start Wizard menu. Select a wizard, press **RIGHT arrow** to open the first step, and follow the instructions.

Note

Do not use the Quick Start Wizard to modify individual parameters. (Perform customization only after the Quick Start has been completed.)

- See Quick Start Wizard via the handheld programmer (Page 53).
- See Quick Start Wizard via SIMATIC PDM (Page 63).
- See Quick Start Wizard via AMS Device Manager (Page 87).

Setup (2.)

Note

Default settings in the parameter tables are indicated with an asterisk (*) unless explicitly stated.

Device (2.1.)

Hardware Revision (2.1.1.)

Corresponds to the electronics hardware of the SITRANS LR250.

Firmware Revision (2.1.2.)

Corresponds to the firmware that is embedded in the SITRANS LR250.

Loader Revision (2.1.3.)

Corresponds to the software used to update the SITRANS LR250.

Order Option (2.1.4.)

Read only. Displays the device type: standard or NAMUR NE 43-compliant.

Menu Timeout (2.1.5.)

Time menu stays visible before switching back to Measurement view if no key is pressed.

Sensor (2.2.)

Units (2.2.1.)

PV (Primary Value) and SV (Secondary Sensor measurement units). Used in setting High/Low Calibration Point, and displayed on LCD and in PDM.

Values	m, cm, mm, ft, in
	Default: m

Sensor Mode (2.2.2.)

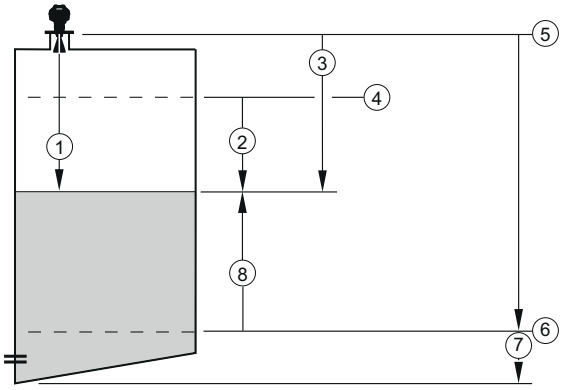

① Sensor value
② Space
③ Distance
④ High Calibration Point
⑤ Sensor reference point [see Dimension drawings] (Page 175)
⑥ Low Calibration Point
⑦ Far range
⑧ Level

Mode		Description	Reference point
NO SERVICE		Measurement and associated loop current are not updated, and the device defaults to Fail-safe mode [a].	n/a
LEVEL	*	Distance to material surface	Low Calibration Point (process empty level)
SPACE		Distance to material surface	High Calibration Point (process full level)
DISTANCE		Distance to material surface	Sensor reference point

[a] See **Material Level (2.5.1.)** for more detail.

Material (2.2.3.)

Automatically configures the device to operate in the chosen application type, by changing one or more of the following parameters: **Propagation Factor (2.8.3.)**, **Position Detect (2.8.4.2.)**, and/or **CLEF Range (2.8.4.4.)**.

Options	*	LIQUID
		LIQUID LOW DK [a] (low dielectric liquid - CLEF algorithm enabled)
Related parameters	Propagation Factor (2.8.3.) Position Detect (2.8.4.2.) CLEF Range (2.8.4.4.)	

[a] dK < 3.0

You can configure each of the related parameters to suit your particular application.

Damping Filter (2.2.4.)

The time constant for the damping filter. The damping filter smooths out the response to a sudden change in level. This is an exponential filter and the engineering unit is always in seconds [see Damping (Page 230) for more detail].

Values	Range: **0** to **100.000** s
	Default: 10.000 s

Calibration (2.3.)

Note

We recommend using the Quick Start wizard to configure the device.

Low Calibration Pt. (2.3.1.)

Distance from sensor reference point[1)] to Low Calibration Point. Units are defined in **Units (2.2.1.)**

Values	Range: **0** to **20** m. Default: 20.00 m
Related parameters	Units (2.2.1.) Far Range (2.8.2.)

[1)] The point from which level measurement is referenced, see Threaded Horn Antenna with extension (Page 181), Flanged Horn with extension (Page 186), and PTFE Flanged encapsulated antenna (3"/DN80/80A sizes and larger) (Page 192).

High Calibration Pt. (2.3.2.)

Distance from sensor reference point [1)] to High Calibration Point. Units are defined in **Units (2.2.1.).**

Values	Range: **0** to **20** m. Default 0.00 m
Related parameters	Units (2.2.1.) Near Range (2.8.1.)

When setting the High Calibration Point value, note that echoes are ignored within **Near Range (2.8.1.)**.

[1)] The value produced by the echo processing which represents the distance from sensor reference point to the target. [see Threaded Horn Antenna with extension (Page 181), Flanged Horn with extension (Page 186), and PTFE Flanged encapsulated antenna (3"/DN80/80A sizes and larger) (Page 192)].

Sensor Offset (2.3.3.)

A constant offset that can be added to or subtracted from the sensor value[1)] to compensate for a shifted sensor reference point. (For example, when adding a thicker gasket or reducing the standoff/nozzle height.) The units are defined in **Units (2.2.1.)**.

Values	Range: -100 to 100 m. Default: 0.00 m
Related parameters	Units (2.2.1.)

[1)] The value produced by the echo processing which represents the distance from sensor reference point to the target, see **Sensor Mode (2.2.2.)**.

Rate (2.4.)

Response Rate (2.4.1.)

Note

Changing Response Rate resets **Fill Rate per Minute (2.4.2.)**, **Empty Rate per Minute (2.4.3.)**, and **Damping Filter (2.2.4.)**.

Sets the reaction speed of the device to measurement changes.

Response Rate (2.4.1.)		Fill Rate per Minute (2.4.2.)	Empty Rate per Minute (2.4.3.)	Damping Filter (2.2.4.)
*	Slow	0.1 m/min (0.32 ft/min)		10 s
	Medium	1.0 m/min (3.28 ft/min)		10 s
	Fast	10.0 m/min (32.8 ft/min)		0 s

Use a setting just faster than the maximum filling or emptying rate (whichever is faster).

Fill Rate per Minute (2.4.2.)

Defines the maximum rate at which the reported sensor value is allowed to decrease. Allows you to adjust the SITRANS LR250 response to decreases in the actual material level. Fill Rate is automatically updated whenever Response Rate is altered.

Options	Range: **0 to 99999** m / min.		
	Response Rate (2.4.1.)		**Fill Rate per Minute (2.4.2.)**
	*	Slow	0.1 m/min (0.32 ft/min)
		Medium	1.0 m/min (3.28 ft/min)
		Fast	10.0 m/min (32.8 ft/min)
Altered by:	Response Rate (2.4.1.)		
Related parameters	Units (2.2.1.)		

Enter a value slightly greater than the maximum vessel-filling rate, in units per minute.

Sensor value is the value produced by the echo processing which represents the distance from sensor reference point to the target. See **Sensor Mode (2.2.2.)** for an illustration.

Empty Rate per Minute (2.4.3.)

Defines the maximum rate at which the reported sensor value is allowed to increase. Adjusts the SITRANS LR250 response to increases in the actual material level. Empty Rate is automatically updated whenever Response Rate is altered.

Options	Range: **0 to 99999** m / min.		
	Response Rate (2.4.1.)		**Empty Rate per Minute (2.4.3.)**
	*	Slow	0.1 m/min (0.32 ft/min)
		Medium	1.0 m/min (3.28 ft/min)
		Fast	10.0 m/min (32.8 ft/min)
Altered by:	Response Rate (2.4.1.)		
Related parameters	Units (2.2.1.)		

Enter a value slightly greater than the vessel's maximum emptying rate, in units per minute.

Sensor value is the value produced by the echo processing which represents the distance from sensor reference point to the target. See **Sensor Mode (2.2.2.)** for an illustration.

Fail-safe (2.5.)

Note

Default settings in the parameter tables are indicated with an asterisk (*) unless explicitly stated.

Material Level (2.5.1.)

Note

The default setting depends whether your device is a standard or NAMUR NE 43-compliant device.

Defines the mA output to use when the Fail-safe timer expires.

STANDARD DEVICE			
Options		HI	**20.5** mA (max. mA Limit)
		LO	**3.8** mA (min. mA Limit)
	*	HOLD	Last valid reading (default 22.6 mA)
		VALUE	User-selected value [defined in **Fail-Safe mA Value (2.5.3.)**]

NAMUR NE 43-COMPLIANT DEVICE[1]			
Options		HI	**20.5** mA (max. mA Limit)
		LO	**3.8** mA (min. mA Limit)
		HOLD	Last valid reading
	*	VALUE	User-selected value [defined in **Fail-Safe mA Value (2.5.3.)**: default 3.58 mA]

[1] Orderable option

LOE Timer (2.5.2.)

Note

When a Loss of Echo occurs **Material Level (2.5.1.)** determines the material level to be reported when the Fail-safe timer expires. See Loss of Echo (LOE) (Page 232) for more detail.

Sets the time to elapse since the last valid reading, before the Fail-safe Level is reported.

Values	Range: **0.00** to **7200** seconds
	Default: 100 s

Fail-Safe mA Value (2.5.3.)

Note

- The default settings are dependent on standard or NAMUR NE 43-compliant device.
- **Material Level (2.5.1.)** must be set to **VALUE** to enable the Fail-Safe mA Value to be reported.

Allows the user to define the mA value to be reported when the Fail-safe timer expires.

Device Type		STANDARD	NAMUR NE43- COMPLIANT
Values	Range	**3.56** mA to **22.6** mA	
	Default	22.60 mA	3.58 mA

Analog Output Scaling (2.6.)

Current Output Function (2.6.1.)

Note

- **Level**, **space**, and **distance**, have different reference points.
- Use caution when changing Current Output Function while the device is connected to a HART network. Current Output Function controls the primary value and the loop current for the device.
- Current Output Function also affects the secondary, tertiary and quaternary variables in a HART network.

Can be set to either **Level, Space, Distance,** or **Volume**. (The device can carry out a volume calculation only after a vessel shape has been specified.)

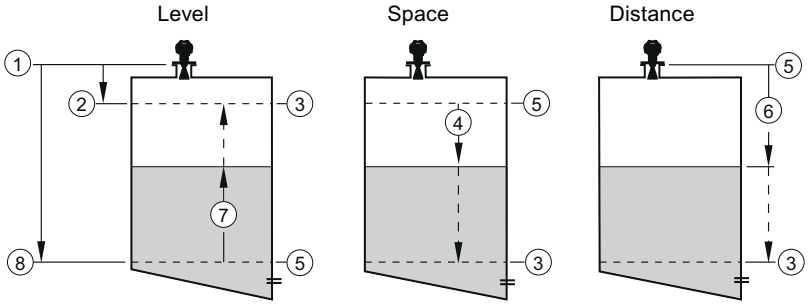

① Sensor reference point
② High calibration point
③ 20 mA 100%
④ Space
⑤ 4 mA 0%
⑥ Distance
⑦ Level
⑧ Low calibration point

Options		Reference point	Description
*	**Level**	Low Calibration Point	measured as a percentage of the difference between High Calibration Point and Low Calibration Point
	Space	High Calibration Point	
	Distance	Sensor reference point	measured as a percentage of Low Calibration Point
	Volume	converts a level measurement to a volume output	
	Manual [a] (LUI only)	allows **mA Output Value (2.6.6.)** to be set to a user-defined value	

[a] Current Output Function must be set to **Manual** before modifying **mA Output Value (2.6.6.).** Remember to restore the previous Current Output Function setting after modifying mA Output Value.

To view the mA reading in the secondary region of the LCD, press 5 on the handheld programmer.

To modify Current Output Function via SIMATIC PDM:

- Open the menu **Device – Select Analog Output**. See Select Analog Output via SIMATIC PDM (Page 78) for more detail.

4 mA Setpoint (2.6.2.)

Sets the process level corresponding to the 4 mA value. 4 mA always defaults to **0**, and **Current Output Function (2.6.1.)** determines whether this is a Level, Space, Distance, or Volume measurement. (See **Current Output Function (2.6.1.)** for an illustration.)

Values	Range: **–999999** to **+999999** (limits vary with current function and units)
	Default: **0.00** m (set to value corresponding to 0% as defined by Current Output Function)
Related Parameters	Units (2.2.1.)
	Current Output Function (2.6.1.)

- Enter the reading that is to correspond to a 4 mA output.
- Units are defined in **Units (2.2.1.)** for Level, Space, or Distance. Units are unspecified for Volume.

20 mA Setpoint (2.6.3.)

Sets the process level corresponding to the 20 mA value. 20 mA always defaults to 100%, and **Current Output Function (2.6.1.)** determines whether this is a Level, Space, or Distance measurement. (See **Current Output Function (2.6.1.)** for an illustration.)

Values	Range: **–999999** to **+999999** (limits vary with current function and units)
	Default: **20.00** m (set to value corresponding to 100% as defined by Current Output Function)
Related Parameters	Units (2.2.1.) Current Output Function (2.6.1.)

- Enter the reading that is to correspond to a 20 mA output.
- Units are defined in **Units (2.2.1.)** for Level, Space, or Distance. Units are unspecified for Volume.

Minimum mA limit (2.6.4.)

Prevents the mA output from dropping below this minimum level for a measurement value. This does not restrict the Fail-safe or Manual settings.

Values	Range: **3.8** to **20.5** (mA)
	Default: **3.8** (mA)

Maximum mA limit (2.6.5.)

Prevents the mA output from rising above this maximum level for a measurement value. This does not restrict the Fail-safe or Manual settings.

Values	Range: **3.8** to **20.50** (mA)
	Default: **20.50** (mA)

mA Output Value (2.6.6.)

Allows you to use a simulated value to test the functioning of the loop. You can enter 4 mA, 20 mA, or any other user-defined value within the range.

Values	Range: **3.56** mA to **22.6** mA
	Read Only unless Current Output Function (2.6.1.) is set to Manual.
Related parameter	Current Output Function (2.6.1.)

1. First set **Current Output Function (2.6.1.)** to **Manual.**
2. Enter the desired mA value in mA Output Value.
3. After completing the test, remember to reset **Current Output Function (2.6.1.)** to the previous setting.

Via SIMATIC PDM:

Open the menu Device – Loop Test. For more detail, see Loop Test (Page 78).

Linearization (2.7.)

Volume (2.7.1.)

Carries out a volume conversion from a level value.

Vessel Shape (2.7.1.1.)

Defines the vessel shape and allows the LR250 to calculate volume instead of level. If **None** is selected, no volume conversion is performed. Select the vessel shape matching the monitored vessel or reservoir.

	Vessel Shape	LCD DISPLAY/ Description	Also required
*	None	NONE/ No volume calculation required	N/A
		CYLINDER/ Flat end horizontal cylinder	Maximum volume
	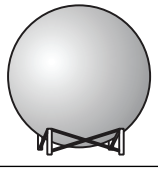	SPHERE/ Sphere	Maximum volume

	Vessel Shape	LCD DISPLAY/ Description	Also required
	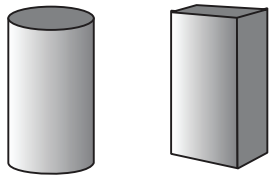	LINEAR/ Upright, linear (flat bottom)	Maximum volume
	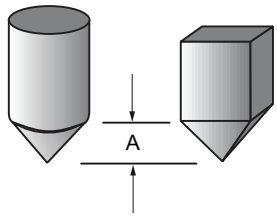	CONICAL BOT/ Conical or pyramidal bottom	Maximum volume, dimension A
	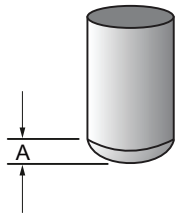	PARABOLIC BOT/Parabolic bottom	Maximum volume, dimension A
	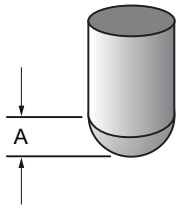	HALF SPHERE BOT/ Half-sphere bottom	Maximum volume, dimension A
	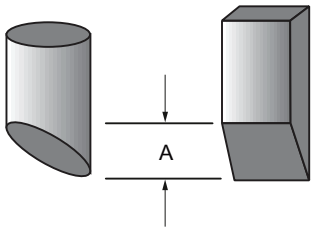	FLAT SLOPED BOT/ Flat sloped bottom	Maximum volume, dimension A

	Vessel Shape	LCD DISPLAY/ Description	Also required
	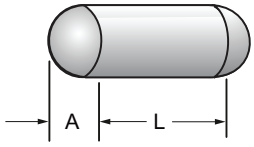	PARABOLIC ENDS/ Parabolic end horizontal cylinder	Maximum volume, dimension A, dimension L
	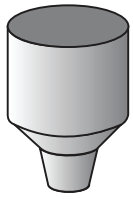	LINEAR TABLE [a] / Linearization table (level/volume breakpoints)	Maximum volume, tables 1-32 level and volume breakpoints

[a] Linearization Table must be selected in order for level/volume values [see **Table 1-8 (2.7.2.)**] to be transferred.

Maximum Volume (2.7.1.2.)

The maximum volume of the vessel. Enter the vessel volume corresponding to High Calibration Point. For example, if your maximum vessel volume is 8000 L, enter a value of 8000. Volume units are defined by the user but are not explicitly stated or shown in the SITRANS LR250.

Values	Range: **0.0** to **99999** m
	Default: 100.0
Related Parameters	Low Calibration Pt. (2.3.1.) High Calibration Pt. (2.3.2.) Vessel Shape (2.7.1.1.)

Vessel Dimension A (2.7.1.3.)

The height of the vessel bottom when the bottom is conical, pyramidal, parabolic, spherical, or flat -sloped. If the vessel is horizontal with parabolic ends, the depth of the end. See **Vessel Shape (2.7.1.1.)** for an illustration.

Values	Range: **0.0** to **99.999** m
	Default: 0.0
Related Parameters	Units (2.2.1.) Vessel Shape (2.7.1.1.)

Vessel Dimension L (2.7.1.4.)

Length of the cylindrical section of a horizontal parabolic end vessel. See **Vessel Shape (2.7.1.1.)** for an illustration.

Values	Range: **0.0** to **99.99** m
	Default: 0.0
Related Parameters	Units (2.2.1.) Vessel Shape (2.7.1.1.)

Table 1-8 (2.7.2.)

Note

Linearization Table must be selected in **Vessel Shape (2.7.1.1.)** in order for level/volume values to be transferred.

If your vessel shape is more complex than any of the preconfigured shapes, you can define the shape as a series of segments. A value is assigned to each level breakpoint and a corresponding value is assigned to each volume breakpoint. Level values are defined in **Units (2.2.1.).** Volume units are defined by the user but are not explicitly stated in the SITRANS LR250.

Level Values	Range: **0.0** to **span** Span = **High Calibration Pt. (2.3.2.)** - **Low Calibration Pt. (2.3.1.)**
	Default: 0.0
Volume Values	Range: **0.0** to **Maximum Volume (2.7.1.2.)**
	Default: 0.0

Enter up to 32 level breakpoints, where the corresponding volume is known. The values corresponding to 100% and 0% levels must be entered. The breakpoints can be ordered from top to bottom, or the reverse.

Breakpoints are grouped into four tables: Table 1-8, Table 9-16, Table 17-24, and Table 25-32.

Entering breakpoints via the handheld programmer:

1. The default unit for level values is **m:** to change it navigate to **Setup (2.) > Sensor (2.2.) > Units(2.2.1.)**, and select the desired unit.
2. Navigate to **Setup (2.) > Linearization (2.7.) > Maximum Volume (2.7.1.2.)**, and enter the value.
3. Go to the appropriate table for the particular breakpoint you wish to adjust: for example, go to Table 1-8 for breakpoint 1.
4. Under Table 1-8, go to **Level 1 (2.7.2.1.)** to enter the level value for the breakpoint 1.
5. Under Table 1-8, go to **Volume 1 (2.7.2.2.)** to enter the volume value for the breakpoint 1.
6. Repeat steps 3 to 5, until values have been entered for all required breakpoints.

Level 1 (2.7.2.1.)

1. Press **RIGHT arrow** to open Edit mode.
2. Enter level value and press **RIGHT arrow** to except it.
3. Press **DOWN arrow** to move to corresponding volume breakpoint.

Volume 1 (2.7.2.2.)

1. Press **RIGHT arrow** to open Edit mode.
2. Enter volume value and press **RIGHT arrow** to accept it.
3. Press **DOWN arrow** to move to next level breakpoint.

Example (values are for example purposes only)

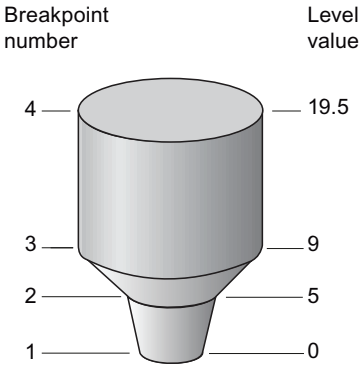

Breakpoint Number	Level value (m)	Volume value (l)
1	0	0
2	5	500
3	9	3000
4	19.5	8000

Table 9-16 (2.7.3.)

Table 17-24 (2.7.4.)

Table 25-32 (2.7.5.)

Signal Processing (2.8.)

Note

Default settings in the parameter tables are indicated with an asterisk (*) unless explicitly stated.

Near Range (2.8.1.)

The range in front of the device (measured from the sensor reference point) within which any echoes will be ignored. This is sometimes referred to as blanking or a dead zone. The factory setting is 50 mm (2") past the end of the antenna, and the default is dependent on the antenna type and process connection. [See Dimension drawings (Page 175) for antenna heights.]

Values	Range: **0** to **20** m (0 to 65.6 ft)
	Default depends on antenna type and process connection:
Related parameters	Units (2.2.1.)

Far Range (2.8.2.)

Note

Far Range can extend beyond the bottom of the vessel.

Allows the material level to drop below Low Calibration Point without generating a Loss of Echo (LOE) state. See **Sensor Mode (2.2.2.)** for an illustration.

Values	Range: Min. = **Low Calibration Pt.** Max. = **23** m (75.45 ft) Default: Value for Low Calibration Pt. + 1 m (3.28 ft)
Related parameters	Units (2.2.1.)

Use this feature if the measured surface can drop below the Low Cal. Point in normal operation.

Propogation Factor (2.8.3.)

Note

- When operating in a stillpipe, values for **CLEF Range (2.8.4.4.)**, and for the propagation factor, should be set according to the pipe size. See the table below.
- For reliable results the antenna size must be close to the pipe size.

Compensates for the change in microwave velocity due to propagation within a metal stillpipe instead of in free space.

Values	Range	0.3 to 1.0 depending on pipe size		
	Default	1.0000		
Nominal Pipe Size [a)]	40 mm (1.5")	50 mm (2")	80 mm (3")	100 mm (4")

Propagation Factor	0.9844	0.988	0.9935	0.9965
CLEF Range (2.8.4.4.) settings	Low calibration point - 700 mm (2.29 ft)[b]	Low calibration point - 700 mm (2.29 ft)[b]	Low calibration point -1000 mm (3.28 ft)[b]	Low calibration point -1000 mm (3.28 ft)[b]

[a] Since pipe dimensions may vary slightly, the propagation factor may also vary.

[b] CLEF range covers the whole measurement range except first 700 or 1000 mm from unit reference point (see A in graphic below)

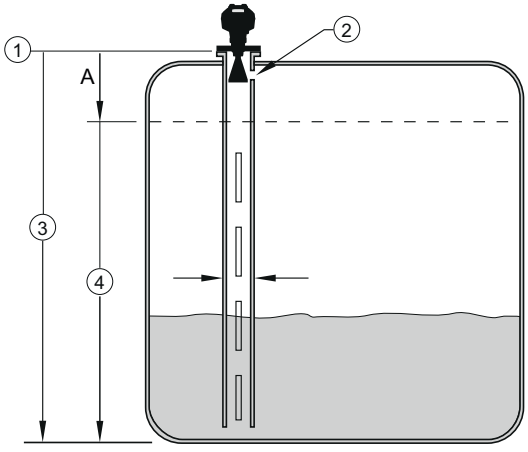

① sensor reference point
② air gap
A 700 or 1000 mm
③ low calibration point
④ CLEF range 2.8.4.4.

Note

Flanged encapsulated antenna

For Flanged encapsulated antenna (7ML5432) match the process connection size to the pipe diameter whenever possible (for example, mount a DN80/3" flange on DN80/3" pipe).

Echo Select (2.8.4.)

Algorithm (2.8.4.1.)

Selects the algorithm to be applied to the echo profile to extract the true echo.

Options	*	tF	True First echo
		L	Largest echo
		BLF	Best of Largest and First echo

Position Detect (2.8.4.2.)

Defines where on the echo the distance measurement is determined.

Options		Center
	*	Hybrid (Center and CLEF)
		CLEF (Constrained Leading Edge Fit)
Related parameters		CLEF Range (2.8.4.4.)

If the vessel bottom is being reported as the level instead of the actual material level (at low level conditions), or if the dielectric constant of the liquid to be monitored is less than 3, we recommend setting Position Detect to Hybrid and **CLEF Range (2.8.4.4.)** to 0.5 m (1.64 ft).

Echo Threshold (2.8.4.3.)

Sets the minimum echo confidence that the echo must meet in order to prevent a Loss of Echo condition and the expiration of the Fail-safe (LOE) timer. When **Confidence (2.8.6.1.)** exceeds **Echo Threshold (2.8.4.3.)**, the echo is accepted as a valid echo and is evaluated.

Values	Range: **0** to **99**
	Default: 5
Related Parameters	LOE Timer (2.5.2.)

CLEF Range (2.8.4.4.)

Note

CLEF Range is referenced from Far range.

The CLEF algorithm is used mainly to allow correct level reporting for low dK materials which may otherwise cause an incorrect reading in an empty or almost empty vessel.

It is used from Low Calibration Point (process empty level) up to the level defined by CLEF Range (see illustration below). Above that point the Center algorithm is used. For more detail see CLEF Range (Page 227).

Values	Range: **0** to **20** m (0 to 65.6 ft)
	Default: 0.0 m
Related parameters	Position Detect (2.8.4.2.)

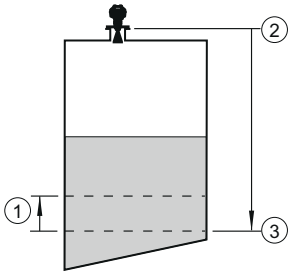

① CLEF Range
② Sensor reference point
③ Low Calibration Point (process empty level)

In applications with low dK materials we recommend setting CLEF Range to 0.5 m (1.64 ft) and **Position Detect (2.8.4.2.)** to Hybrid.

Sampling (2.8.5.)

Provides a method of checking the reliability of a new echo before accepting it as the valid reading, based on numbers of samples above or below the currently selected echo.

Echo Lock (2.8.5.1.)

Note

Ensure the agitator is always running while SITRANS LR250 is monitoring the vessel, to avoid stationary blade detection.

Selects the measurement verification process.

Options		Lock Off
		Maximum Verification (not recommended for radar)
	*	Material Agitator
		Total Lock (not recommended for radar)
Related parameters		Fill Rate per Minute (2.4.2.) Empty rate per Minute (2.4.3.) Sampling Up (2.8.5.2.) Sampling Down (2.8.5.3.)

For radar applications, Material Agitator is the most often-used setting, to avoid agitator blade detection.

Sampling Up (2.8.5.2.)

Specifies the number of consecutive echoes that must appear above the echo currently selected, before the measurement is accepted as valid.

Values	Range: **1** to **50**
	Default: 5

Sampling Down (2.8.5.3.)

Specifies the number of consecutive echoes that must appear below the echo currently selected, before the measurement is accepted as valid.

Values	Range: **1** to **50**
	Default: **2**

Echo Quality (2.8.6.)

Confidence (2.8.6.1.)

Indicates echo reliability: higher values represent better echo quality. The display shows the echo confidence of the last measurement. **Echo Threshold (2.8.4.3.)** defines the minimum criterion for echo confidence.

Values (view only)	**0** to **99**	
	----	Shot not used
Related Parameters	Echo Threshold (2.8.4.3.)	

Open the menu **Device – Echo Profile Utilities** and click on the tab **Echo Profile**.

Echo Strength (2.8.6.2.)

Displays the absolute strength (in dB above 1 µV rms) of the echo selected as the measurement echo.

Values (view only)	**-20** to **99**	
	----	Shot not used

Open the menu **Device – Echo Profile Utilities** and click on the tab **Echo Profile**.

Noise Average (2.8.6.3.)

Displays the average ambient noise (in dB above 1 µV rms) of a noise profile. Noise level is a combination of transient noise and receiving circuitry. After a measurement, the values from the previous noise shot will be displayed.

TVT Setup (2.8.7.)

Note

Default settings in the parameter tables are indicated with an asterisk (*) unless explicitly stated.

Auto False Echo Suppression (2.8.7.1.)

Used together with **Auto False Echo Suppression Range (2.8.7.2.)** to screen out false echoes in a vessel with known obstructions. A 'learned TVT' (time varying threshold) replaces the default TVT over a specified range. See Auto False Echo Suppression (Page 228) for a more detailed explanation.

Note

- Make sure material level is below all known obstructions when Auto False Echo Suppression is used to learn the echo profile. (An empty or almost empty vessel is recommended.)
- Note the distance to material level when Auto False Echo learns the environment. Set Auto False Echo Suppression Range to a shorter distance to avoid the material echo being screened out.
- Set Auto False Echo Suppression and Auto False Echo Suppression Range during startup, if possible.
- If the vessel contains an agitator it should be running.
- Before adjusting these parameters, rotate the instrument for best signal (lower false-echo amplitude).

Before Auto False Echo Suppression

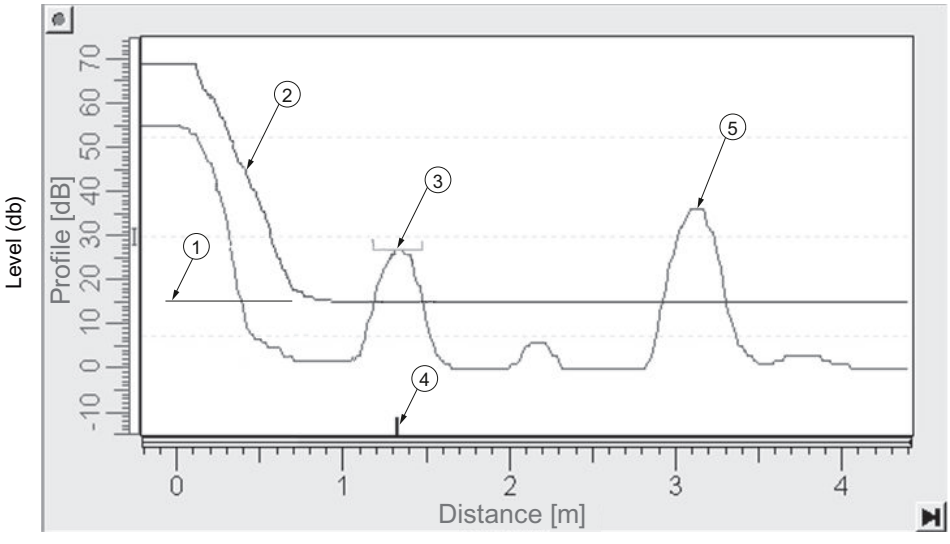

① TVT Hover Level
② default TVT
③ false echo
④ echo marker
⑤ material level

1. Determine Auto False Echo Suppression Range. Measure the actual distance from the sensor reference point to the material surface using a rope or tape measure.
2. Subtract 0.5 m (20") from this distance, and use the resulting value.
3. Go to **Auto False Echo Suppression Range (2.8.7.2.)** and enter the value calculated in step 2.

4. Go to **Auto False Echo Suppression (2.8.7.1.)** and press RIGHT arrow to open Edit Mode.
5. Select **Learn**. The device will automatically revert to **On** (Use Learned TVT) after a few seconds.

After Auto False Echo Suppression

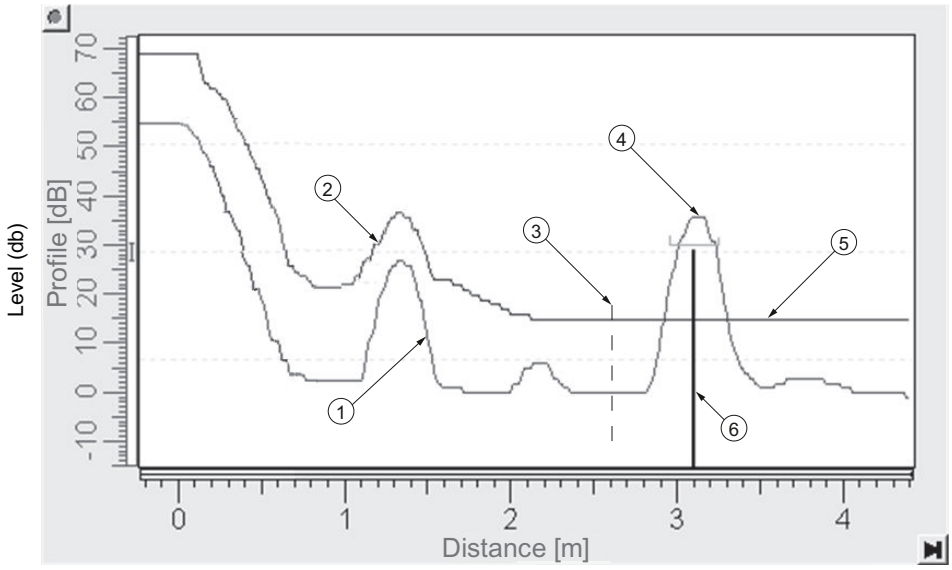

①	false echo	④	material level
②	learned TVT	⑤	default TVT
③	Auto False Echo Suppression Range	⑥	echo marker

To set Auto False Echo Suppression via SIMATIC PDM:

Open the menu **Device – Echo Profile Utilities** and click on the tab **Auto False Echo Suppression**. For more detailed instructions see Auto False Echo Suppression via SIMATIC PDM (Page 74).

To set Auto False Echo Suppression via the handheld programmer:

Options		OFF	Default TVT will be used.
	*	ON	'Learned' TVT will be used.
		LEARN	'Learn' the TVT[a].

[a] The learned TVT takes effect only at the next measurement.

Auto False Echo Suppression Range (2.8.7.2.)

Note

Changes take effect only at the next measurement. "Master reset" does not clear the learned/stored TVT, select "Off" to turn it off or "learn" for a new TVT. See **Master Reset (4.1.)**

Specifies the range within which Learned TVT is used [see **Auto False Echo Suppression (2.8.7.1.)** for more detail].

Values	Range: **0.00** to **20.00** m
	Default: 1.00 m
Related parameters	Units (2.2.1.)

1. Calculate range according to **Auto False Echo Suppression (2.8.7.1.)** steps 1 and 2.
2. Press **RIGHT arrow** to open Edit mode.
3. Enter the new value and press **RIGHT arrow** to accept it.
4. Set **Auto False Echo Suppression (2.8.7.1.)**.

Hover Level (2.8.7.3.)

Note

Changes take effect only at the next measurement.

Defines how high the TVT (Time Varying Threshold) is placed above the noise floor of the echo profile, as a percentage of the difference between the peak of the largest echo in the profile and the noise floor. See **Auto False Echo Suppression (2.8.7.1.)** for an illustration.

Values	Range: **0** to **100**%
	Default: 40%

When the device is located in the center of the vessel, the TVT hover level may be lowered to increase the confidence level of the largest echo.

Shaper Mode (2.8.7.4.)

Enables/disables the TVT shaper.

Options		ON
	*	OFF

TVT shaper (2.8.8.)

Note

- The range is –100 to 100 bits. With 2 bits per dB this gives a range of –50 to 50 dB.
- **Shaper Mode (2.8.7.4.)** must be turned ON in order for TVT shaper points to be transferred.

Adjusts the TVT (Time Varying Threshold) at a specified range (breakpoint on the TVT). This allows you to reshape the TVT to avoid unwanted echoes. There are 40 breakpoints arranged in 5 groups. (We recommend using SIMATIC PDM to access this feature.)

To use TVT shaper via SIMATIC PDM:

1. Go to **Level Meter > Setup > Signal Processing > TVT setup > Shaper Mode** and select **On**.
2. Open the menu **Device – Echo Profile Utilities** and click on **TVT Shaper**. For more detail see TVT shaper via SIMATIC PDM (Page 73).

To use TVT shaper via LUI (local user interface):

1. Go to **Shaper Mode (2.8.7.4.)** and select **On**.
2. Go to Breakpoint **1-9 (2.8.8.1.)**.
3. Open Shaper 1 and enter the TVT Offset value (between –50 and 50).
4. Go to the next Shaper point and repeat steps 3 and 4 until all desired breakpoint values have been entered.

Breakpoint 1-9 (2.8.8.1.)

Values	Range: **–50 to 50 dB**
	Default: **0 dB**

Breakpoint 10-18 (2.8.8.2.)

Values	Range: **–50 to 50 dB**
	Default: **0 dB**

Breakpoint 19-27 (2.8.8.3.)

Values	Range: **–50 to 50 dB**
	Default: **0 dB**

Breakpoint 28-36 (2.8.8.4.)

Values	Range: **–50 to 50 dB**
	Default: **0 dB**

Breakpoint 37-40 (2.8.8.5.)

Values	Range: **–50 to 50 dB**
	Default: **0 dB**

Measured Values (2.8.9.)

Read only. Allows you to view measured values for diagnostic purposes.

To access measured values via SIMATIC PDM:

Open the menu **View – Process Variables**.

Level Measurement (2.8.9.1.)

The value for level.

Space Measurement (2.8.9.2.)

The value for space.

Distance Measurement (2.8.9.3.)

The value for distance.

Volume Measurement (2.8.9.4.)

The value for volume.

Diagnostics (3.)

Echo Profile (3.1.)

Allows you to request the current echo profile either locally via the handheld programmer, or remotely via SIMATIC PDM, or AMS Device Manager. [For more detail see Echo Processing (Page 223)].

To request a profile via SIMATIC PDM:

Open the menu **Device – Echo Profile Utilities**. [For more detail see Echo Profile Utilities via SIMATIC PDM (Page 71)].

To request a profile via the handheld programmer:

1. In **PROGRAM** mode, navigate to **Level Meter > Diagnostics (3.) > Echo Profile (3.1.)**
2. Press **RIGHT arrow** to request a profile.

[For more detail see Requesting an Echo Profile (Page 56)].

Electronics Temperature (3.2.)

Current Internal Temperature (3.2.1.)

Read only. Displays (in degrees C) the current temperature on the circuit board recorded by the internal electronics.

For access via SIMATIC PDM open the menu **View – Process Variables** and check the field **Electronics Temperature**.

Highest Value (3.2.2.)

Read only. Displays (in degrees C) the maximum temperature recorded by the internal electronics. The high and low values are maintained over a power cycle.

Via SIMATIC PDM navigate to **Maintenance and Diagnostics > Electronics Temperature**.

Lowest Value (3.2.3.)

Read only. Displays (in degrees C) the minimum temperature recorded by the internal electronics. The high and low values are maintained over a power cycle.

Via SIMATIC PDM navigate to **Maintenance and Diagnostics > Electronics Temperature**.

Service (4.)

Note

Default settings in the parameter tables are indicated with an asterisk (*) unless explicitly stated.

Master Reset (4.1.)

Note

Following a reset to **Factory Defaults**, complete reprogramming is required.

Resets all parameter to factory defaults, with the following exceptions:

- **Device Address (5.1.)** remains unchanged if the reset command is sent remotely (via AMS, PDM, DTM, FC375) but is reset to 0 if the reset command is sent via LUI.
- **Write Protect (6.2.1.)** and **PIN to Unlock (6.2.2.)** values are not reset.
- **Auto False Echo Suppression (2.8.7.1.)** learned TVT and **Auto False Echo Suppression Range (2.8.7.2.)** are not lost.

Options	*	Idle or Done (Return to previous menu)
		Factory Defaults

To perform a reset to factory defaults via SIMATIC PDM, open the menu **Device – Master Reset** and click on **Factory Defaults.**

Remaining Device Lifetime (4.2.)

Note

- Default settings in the parameter tables are indicated with an asterisk (*) unless explicitly stated.
- Four sets of parameters allow you to monitor the Device/Sensor Lifetimes and set up Maintenance/Service schedules, based on operating hours instead of a calendar-based schedule. See also **Remaining Sensor Lifetime (4.3.)**, **Service Schedule (4.4.)**, and **Calibration Schedule (4.5.)**.
- Performing a reset to **Factory Defaults** will reset all the Maintenance Schedule parameters to their factory defaults.
- The device operates in years. To view Remaining Device Lifetime parameters in hours or days (via SIMATIC PDM only) see **Lifetime (Expected) (4.2.1.)**.

The device tracks itself based on operating hours and monitors its predicted lifetime. You can modify the expected device lifetime, set up schedules for maintenance reminders, and acknowledge them.

The maintenance warnings and reminders are available through HART communications. This information can be integrated into an Asset Management system. For optimal use, we recommend that you use SIMATIC PCS7 Asset Management Software in conjunction with SIMATIC PDM.

To access these parameters via SIMATIC PDM:

- Open the menu **Device – Maintenance** and select the **Remaining Device Lifetime** tab.
- After modifying values/units as required, click on **Write** to accept the change, and **Read** to view the effect of the change.
- Click on **Snooze** to add a year to the Total Expected Device Life.

Time Units

Options [a]	Hours; days; years
	Default: years

[a] Selectable only via SIMATIC PDM.

Lifetime (Expected) (4.2.1.)

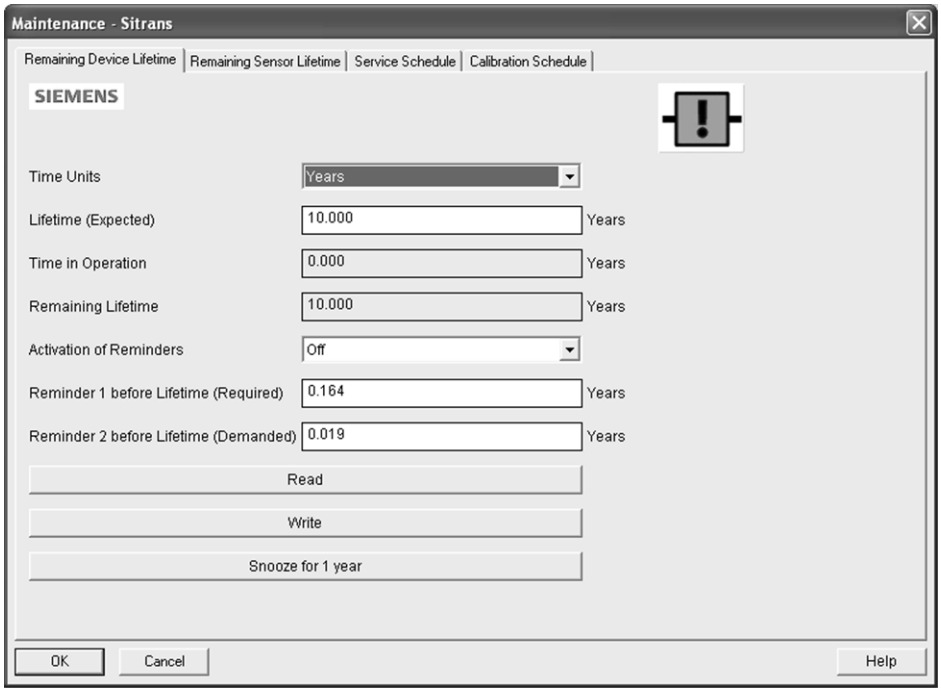

Note

The device always operates in years. Changing the units affects only the parameter view of the Service Interval parameters in SIMATIC PDM.

User-configurable recommended time between product inspections.

Values	Units [a]: hours, days, years
	Range: **0** to **20** years
	Default: 10 years

[a] Units are selectable only via SIMATIC PDM.

Time in Operation (4.2.2.)

Read only. The amount of time the device has been operating.

Remaining Lifetime (4.2.3.)

Read only. **Lifetime (Expected) (4.2.1.)** less **Time in Operation (4.2.2.).**

Activation of Reminders (4.2.4.)

Note

To modify this parameter via SIMATIC PDM it must be accessed via the pull-down menu **Device – Maintenance**.

Allows you to enable a maintenance reminder.

Values	*	Timer OFF
		ON - no reminders checked
		ON - Reminder 1 (Maintenance Required) checked
		ON - Reminders 1 and 2 checked
		ON - Reminder 2 (Maintenance Demanded) checked

1. First set the values in **Reminder 1 before Lifetime (Required) (4.2.5.)**/ **Reminder 2 before Lifetime (Demanded) (4.2.6.)**.
2. Select the desired **Activation of Reminders** option.

Reminder 1 before Lifetime (Required) (4.2.5.)

If **Remaining Lifetime (4.2.3.)** is equal to or less than this value, the device generates a Maintenance Required reminder.

Values	Range: **0** to **Lifetime (Expected) (4.2.1.)**
	Default: 0.164 years

1. Modify values as required.
2. Set **Activation of Reminders (4.2.4.)** to the desired option.

Reminder 2 before Lifetime (Demanded) (4.2.6.)

If **Remaining Lifetime (4.2.3.)** is equal to or less than this value, the device generates a Maintenance Demanded reminder.

Values	Range: **0** to **Lifetime (Expected) (4.2.1.)**
	Default: 0.019 years

1. Modify values as required.
2. Set **Activation of Reminders (4.2.4.)** to the desired option.

Maintenance Status (4.2.7.)

Indicates which level of maintenance reminder is active.

In SIMATIC PDM, open the menu **View – Device Status**, click on the **Maintenance** tab, and check the **Device Lifetime Status** window.

Acknowledge Status (4.2.8.)

Indicates which level of maintenance reminder has been acknowledged.

In SIMATIC PDM, open the menu **View – Device Status**, click on the **Maintenance** tab, and check the **Device Lifetime Status** window.

Acknowledge (4.2.9.)

Acknowledges the current maintenance reminder.

To acknowledge a reminder via SIMATIC PDM:

1. Open the menu **View – Device Status** and click on the **Maintenance** tab.
2. In the **Device Lifetime** section, click on **Acknowledge Warnings**.

To acknowledge a reminder via the handheld programmer:

1. Press **RIGHT arrow** twice to open parameter view and activate Edit Mode.
2. Press **RIGHT arrow** to acknowledge the reminder.

Remaining Sensor Lifetime (4.3.)

Note

- Default settings in the parameter tables are indicated with an asterisk (*) unless explicitly stated.
- Four sets of parameters allow you to monitor the Device/Sensor Lifetimes and set up Maintenance/Service schedules, based on operating hours instead of a calendar-based schedule. See also **Remaining Device Lifetime (4.2.), Service Schedule (4.4.)**, and **Calibration Schedule (4.5.)**.
- Performing a reset to Factory Defaults will reset all the Maintenance Schedule parameters to their factory defaults.
- The device operates in years. To view Remaining Sensor Lifetime parameters in hours or days (via SIMATIC PDM only) see **Lifetime Expected (4.3.1.)**.

The device monitors the predicted lifetime of the sensor (the components exposed to the vessel environment). You can modify the expected sensor lifetime, set up schedules for maintenance reminders, and acknowledge them.

To access these parameters via SIMATIC PDM:

- Open the menu **Device – Maintenance** and select the **Remaining Sensor Lifetime** tab.
- After modifying values/units as required, click on **Write** to accept the change, and **Read** to view the effect of the change.
- Click on **Snooze** to add a year to the Total Expected Sensor Life.
- Click on **Sensor Replaced** to restart the timer and clear any fault messages.

Time Units

Options [a]	Hours; days; years
	Default: years

[a] Selectable only via SIMATIC PDM.

Lifetime (Expected) (4.3.1.)

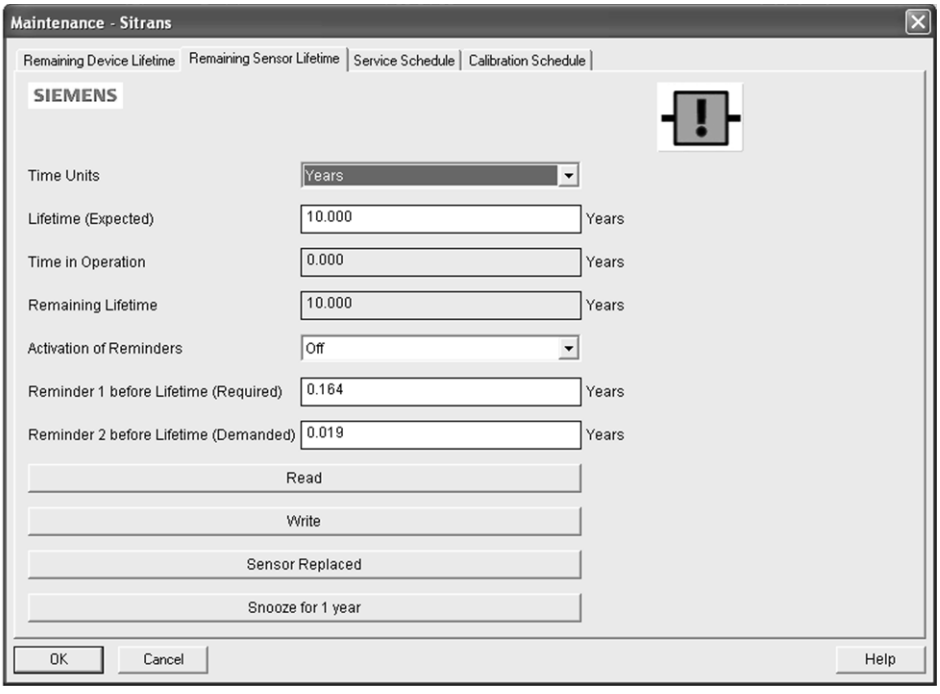

Note

The device always operates in years. Changing the units affects only the parameter view of Remaining Sensor Life parameters in SIMATIC PDM.

Allows you to override the factory default.

Values	Units [a]: hours, days, years
	Range: **0** to **20** years
	Default: 10.00 years

[a] Units are selectable only via SIMATIC PDM.

Time in Operation (4.3.2.)

The amount of time the sensor has been operating. Can be reset to zero after performing a service or replacing the sensor.

To reset to zero:

- In SIMATIC PDM, open the menu **Device – Maintenance**, click on the **Remaining Sensor Lifetime** tab, and click on **Sensor Replaced** to restart the timer and clear any fault messages.
- Via the handheld programmer, manually reset **Time in Operation (4.3.2.)** to zero.

Remaining Lifetime (4.3.3.)

Read only. **Lifetime (Expected) (4.3.1.)** less **Time in Operation (4.3.2.)**.

Activation of Reminders (4.3.4.)

Note

To modify this parameter via SIMATIC PDM it must be accessed via the pull-down menu **Device – Maintenance**.

Allows you to enable a maintenance reminder.

Options		Reminder 1 (Maintenance Required)
		Reminder 2 (Maintenance Demanded)
		Reminders 1 and 2
	*	OFF

1. First set the values in **Reminder 1 before Lifetime (Required) (4.3.5.)**/**Reminder 2 before Lifetime (Demanded) (4.3.6.)**.
2. Select the desired **Activation of Reminders** option.

Reminder 1 before Lifetime (Required) (4.3.5.)

If **Remaining Lifetime (4.3.3.)** is equal to or less than this value, the device generates a **Maintenance Required** reminder.

Values	Range: **0** to **Lifetime (Expected) (4.3.1.)**
	Default: 0.164 years

1. Modify values as required.
2. Set **Activation of Reminders (4.3.4.)** to the desired option.

Reminder 2 before Lifetime (Demanded) (4.3.6.)

If **Remaining Lifetime (4.3.3.)** is equal to or less than this value, the device generates a **Maintenance Demanded** reminder.

Values	Range: **0** to **Lifetime (Expected) (4.3.1.)**
	Default: 0.019 years

1. Modify values as required.
2. Set **Activation of Reminders (4.3.4.)** to the desired option.

Maintenance Status (4.3.7.)

Indicates which level of maintenance reminder is active.

In SIMATIC PDM, open the menu **View – Device Status**, click on the **Maintenance** tab, and check the **Sensor Lifetime Status** window.

Acknowledge Status (4.3.8.)

Indicates which level of maintenance reminder has been acknowledged.

In SIMATIC PDM, open the menu **View – Device Status**, click on the **Maintenance** tab, and check the **Sensor Lifetime Status** window.

Acknowledge (4.3.9.)

Acknowledges the current maintenance reminder.

To acknowledge a reminder via SIMATIC PDM:

1. Open the menu **View – Device Status** and click on the **Maintenance** tab.
2. In the **Sensor Lifetime** section, click on **Acknowledge Warnings**.

To acknowledge a reminder via the handheld programmer:

1. Press **RIGHT arrow** [→] twice to open parameter view and activate **Edit** Mode.
2. Press **RIGHT arrow** [→] to acknowledge the reminder.

Service Schedule (4.4.)

Note

- Four sets of parameters allow you to monitor the Device/Sensor Lifetimes and set up Maintenance/Service schedules, based on operating hours instead of a calendar-based schedule. See also **Remaining Device Lifetime (4.2.)**, **Remaining Sensor Lifetime (4.3.)**, and **Calibration Schedule (4.5.)**.
- Performing a reset to **Factory Defaults** will reset all the Maintenance Schedule parameters to their factory defaults.
- The device operates in years. To view Service Interval parameters in hours or days (via SIMATIC PDM only) see **Service interval (4.4.1.)**.

The device tracks service intervals based on operating hours and monitors the predicted lifetime to the next service. You can modify the Total Service Interval, set schedules for maintenance reminders, and acknowledge them.

The maintenance warnings and reminders are communicated to the end user through status information. This information can be integrated into any Asset Management system. For

optimal use, we recommend that you use SIMATIC PCS7 Asset Management Software in conjunction with SIMATIC PDM.

To access these parameters via SIMATIC PDM:

- Open the menu **Device – Maintenance** and select the **Service Schedule** tab.
- After modifying values/units as required, click on **Write** to accept the change, and **Read** to view the effect of the change.
- Click on **Service Performed** to restart the timer and clear any fault messages.

Time Units

Options [a]	Hours; days; years
	Default: years

[a] Selectable only via SIMATIC PDM.

Service Interval (4.4.1.)

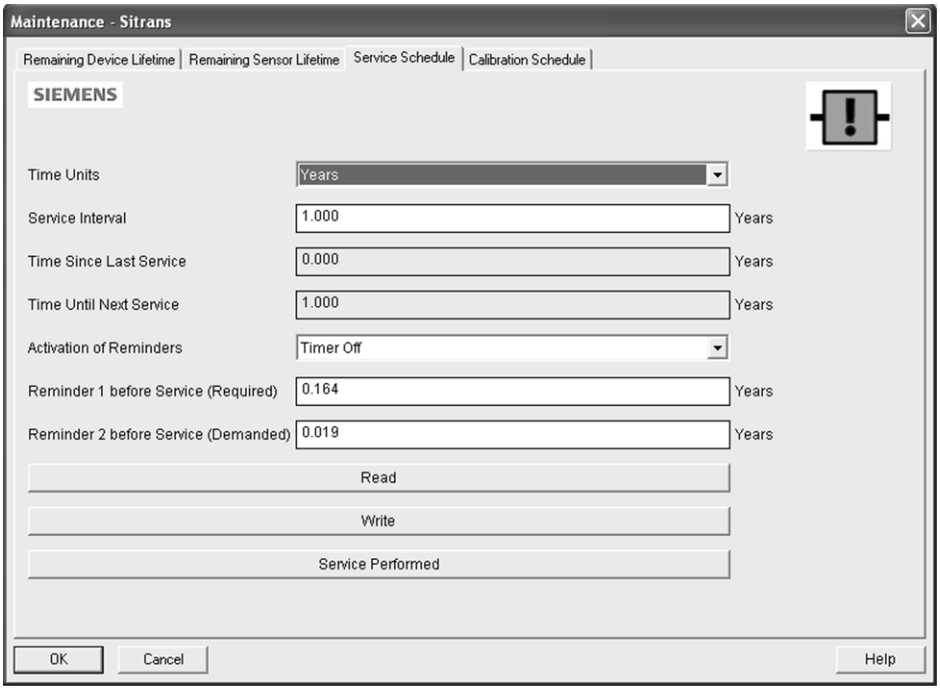

Note

The device always operates in years. Changing the units affects only the parameter view of the Service Interval parameters in SIMATIC PDM.

User-configurable recommended time between product inspections.

Values	Units [a]: hours, days, years
	Range: **0 to 20 years**
	Default: **1.0** year

[a] Units are selectable only via SIMATIC PDM.

Time Since Last Service (4.4.2.)

Time elapsed since last service. Can be reset to zero after performing a service.

To reset to zero:

- In SIMATIC PDM, open the menu **Device – Maintenance**, click on the **Service Schedule** tab, and click on **Service Performed** to restart the timer and clear any fault messages.
- Via the handheld programmer, manually reset **Time since Last Service (4.4.2.)** to zero.

Time Until Next Service (4.4.3.)

Read only. **Service Interval (4.4.1.)** less **Time Since Last Service (4.4.2.)**.

Activation of Reminders (4.4.4.)

Note

To modify this parameter via SIMATIC PDM it must be accessed via the pull-down menu **Device – Maintenance**.

Allows you to enable a maintenance reminder.

Options	*	Timer OFF
		ON - no reminders checked
		ON - Reminder 1 (Maintenance Required) checked
		ON - Reminders 1 and 2 checked
		ON - Reminder 2 (Maintenance Demanded) checked

1. First set the values in **Reminder 1 before Service (Required) (4.4.5.)**/**Reminder 2 before Service (Demanded) (4.4.6.)**.
2. Select the desired **Reminder Activation** option.

Reminder 1 before Service (Required) (4.4.5.)

If **Time Until Next Service (4.4.3.)** is equal to or less than this value, the device generates a **Maintenance Required** reminder.

Values	Range: **0** to **Service Interval (4.4.1.)**
	Default: 0.164 years

1. Modify values as required.
2. Set **Activation of Reminders (4.4.4.)** to the desired option.

Reminder 2 before Service (Demanded) (4.4.6.)

If **Time Until Next Service (4.4.3.)** is equal to or less than this value, the device generates a **Maintenance Required** reminder.

Values	Range: **0** to **Service Interval (4.4.1.)**
	Default: 0.019 years

1. Modify values as required
2. Set **Activation of Reminders (4.4.4.)** to the desired option.

Maintenance Status (4.4.7.)

Indicates which level of maintenance reminder is active.

Open the menu **View – Device Status**, click on the **Maintenance** tab and check the **Service Schedule Status** window.

Acknowledge Status (4.4.8.)

Indicates which level of maintenance reminder has been acknowledged.

Open the menu **View – Device Status**, click on the **Maintenance** tab and check the **Service Schedule Status** window.

Acknowledge (4.4.9.)

Acknowledges the current maintenance reminder.

To acknowledge a reminder via SIMATIC PDM:

1. Open the menu **View – Device Status** and click on the **Maintenance** tab.
2. In the **Service Schedule Status** section, click on **Acknowledge Warnings**.

To acknowledge a reminder via the handheld programmer:

1. Press **RIGHT** ▶ **arrow** twice to open parameter view and activate **Edit** Mode.
2. Press **RIGHT** ▶ **arrow** to acknowledge the reminder.

Calibration Schedule (4.5.)

Note

- Default settings in the parameter tables are indicated with an asterisk (*) unless explicitly stated.
- Four sets of parameters allow you to monitor the Device/Sensor Lifetimes and set up Maintenance/Service schedules, based on operating hours instead of a calendar-based schedule. See also **Remaining Device Lifetime (4.2.)**, **Remaining Sensor Lifetime (4.3.)**, and **Service Schedule (4.4.)**.
- Performing a reset to **Factory Defaults** will reset all the Maintenance Schedule parameters to their factory defaults.
- The device operates in years. To view Calibration Interval parameters in hours or days (via SIMATIC PDM only) see **Calibration Interval (4.5.1.)**.

The device tracks calibration intervals based on operating hours and monitors the predicted lifetime to the next calibration. You can modify the Total Calibration Interval, set schedules for maintenance reminders, and acknowledge them.

To access these parameters via SIMATIC PDM:

- Open the menu **Device – Maintenance** and select the **Calibration Schedule** tab.
- After modifying values/units as required, click on **Write** to accept the change, and **Read** to view the effect of the change.
- Click on **Calibration Performed** to restart the timer and clear any fault messages.

Time Units

Options [a)]	Hours; days; years
	Default: years

[a)] Selectable only via SIMATIC PDM.

Calibration Interval (4.5.1.)

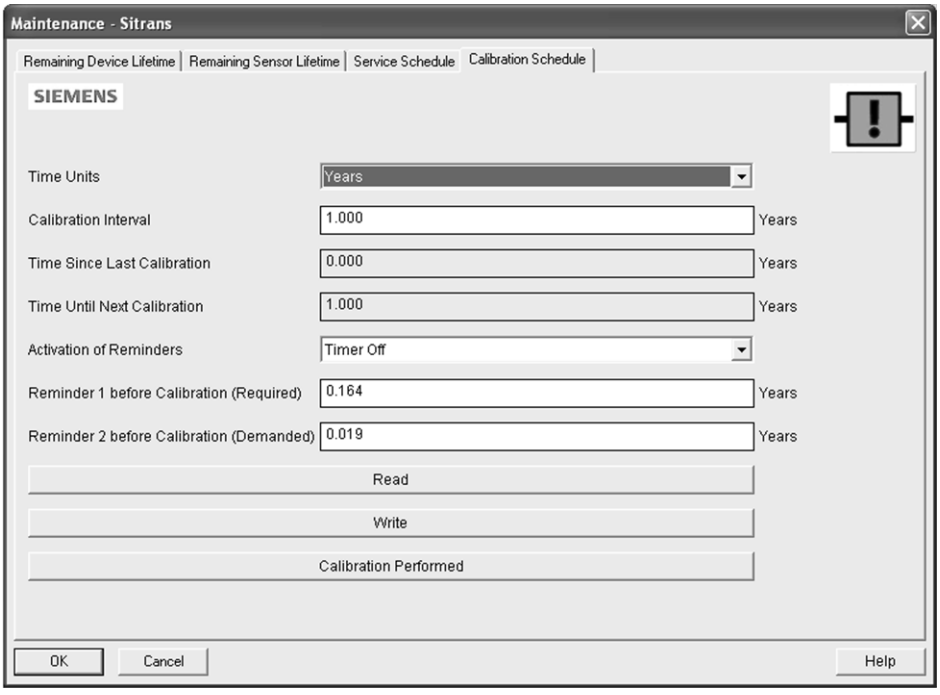

Note

The device always operates in years. Changing the units affects only the parameter view of Remaining Sensor Life parameters in SIMATIC PDM.

User-configurable recommended time between product calibrations.

Values	Units [a]: hours, days, years
	Range: **0 to 20 years**
	Default: **1.0** year

[a] Units are selectable only via SIMATIC PDM.

Time Since Last Calibration (4.5.2.)

Time elapsed since last calibration. Can be reset to zero after performing a calibration.

To reset to zero:

- In SIMATIC PDM, open the menu **Device – Maintenance**, click on the **Calibration Schedule** tab, and click on **Calibration Performed** to restart the timer and clear any fault messages.
- Via the handheld programmer, manually reset **Time Since Last Calibration (4.5.2.)** to zero.

Time Until Next Calibration (4.5.3.)

Read only. **Calibration Interval (4.5.1.)** less **Time Since Last Calibration (4.5.2.)**.

Activation of Reminders (4.5.4.)

Note

To modify this parameter via SIMATIC PDM it must be accessed via the pull-down menu Device – Maintenance.

Allows you to enable a maintenance reminder.

Options		Timer OFF
		ON - no reminders checked
		ON - Reminder 1 (Maintenance Required) checked
	*	ON - Reminders 1 and 2 checked
		ON—Reminder 2 (Maintenance Demanded) checked

1. First set the values in **Reminder 1 before Calibration (Required) (4.5.5.)**/**Reminder 2 before Calibration (Demanded) (4.5.6.)**.
2. Select the desired **Activation of Reminders** option.

Reminder 1 before Calibration (Required) (4.5.5.)

If **Time Until Next Calibration (4.5.3.)** is equal to or less than this value, the device generates a **Maintenance Required** reminder.

Values	Range: **0** to **Calibration Interval (4.5.1.)**
	Default: 0.164 years

1. Modify values as required.
2. Set **Activation of Reminders (4.5.4.)** to the desired option.

Reminder 2 before Calibration (Demanded) (4.5.6.)

If **Time Until Next Calibration (4.5.3.)** is equal to or less than this value, the device generates a **Maintenance Demanded** reminder.

Values	Range: **0** to **Calibration Interval (4.5.1.)**
	Default: 0.164 years

1. Modify values as required.
2. Set Activation of Reminders (4.5.4.) to the desired option.

Maintenance Status (4.5.7.)

Indicates which level of maintenance reminder is active.

In SIMATIC PDM, open the menu **View – Device Status**, click on the **Maintenance** tab and check the **Calibration Schedule Status** window.

Acknowledge Status (4.5.8.)

Indicates which level of maintenance reminder has been acknowledged.

In SIMATIC PDM, open the menu **View – Device Status**, click on the **Maintenance** tab and check the **Calibration Schedule Status** window.

Acknowledge (4.5.9.)

Acknowledges the current maintenance reminder.

To acknowledge a reminder via SIMATIC PDM:

1. Open the menu **View – Device Status** and click on the **Maintenance** tab.
2. In the **Service Schedule Status** section, click on **Acknowledge Warnings**.

To acknowledge a reminder via the handheld programmer:

1. Press **RIGHT** ▶ **arrow** twice to open parameter view and activate **Edit** Mode.
2. Press **RIGHT** ▶ **arrow** to acknowledge the reminder.

Manufacture Date (4.6.)

Read only. The date of manufacture of the SITRANS LR250 (yy mm dd).

Powered Hours (4.7.)

Read only. Displays the number of hours the unit has been powered up since manufacture.

In SIMATIC PDM, open the menu **Device – Wear**.

Power-on Resets (4.8.)

Read only. The number of power cycles that have occurred since manufacture.

In SIMATIC PDM, open the menu **Device – Wear**.

LCD Fast Mode (4.9.)

Note

- LCD Fast Mode takes effect only after 30 minutes of inactivity. (Each time the device is powered up, a further 30 minutes of inactivity is required.)
- LCD Fast Mode affects Measurement mode only; it has no effect on Navigation mode.

Enables a faster rate of measurement from the device by disabling most of the display area. Only the bar graph will be refreshed when LCD Fast Mode is set to ON.

Values	ON or OFF
	Default: OFF

LCD Contrast (4.10.)

The factory setting is for optimum visibility at room temperature and in average light conditions. Extremes of temperature will lessen the contrast.

Values	Range: **0** (low contrast) to **20** (high contrast). Default: 10

Adjust the value to improve visibility at room temperature and in average light conditions. Change the value in small steps to ensure you can continue to read the display.

Secondary Value (4.11.)

Use the secondary value to capture the menu navigation path to any viewable parameter. Once the navigation path is stored, the value of that parameter will be displayed in **Measurement** mode as the secondary value.

While in Parameter view of the current parameter, press the decimal point key. This stores the path to the current parameter in the Secondary Value, and displays the value for that parameter on the LCD display when in **Measurement** mode. See The LCD Display (Page 47) for an illustration.

Memory Test (4.12.)

Allows verification of the RAM, EEPROM, and Flash memory of the SITRANS LR250.

LCD Display	IDLE	No test in progress.
	BUSY	Test in progress.
	PASS	Memory test successful.
	FAIL	Test failed.
	Err1	Test returned unexpected results.
	P Oxcafe	Test passed with result data.
	F Oxcafe	Test failed with result data.
Handheld programmer entry	**1** to **9**	Any numeric key from 1 to 9 activates test.

- Press **RIGHT** ▶ **arrow** to edit then press any numeric key from 1 to 9 to activate the test.
- The reading will display BUS and then the test result text.

Communication (5.)

Note

Default settings in the parameter tables are indicated with an asterisk (*) unless explicitly stated.

Device Address (5.1.)

Sets the device address or poll ID on a HART network. Any address other than 0 will cause the output current to be a fixed value, and the current will not indicate the reading.

Values	Range: **0** to **15**
	Default: 0

To set Device Address via SIMATIC PDM:

- Open the project in **Process Device Network View** then right-click on the device.
- Go to **Object Properties > Connection** to access the field **Short Address.**

Security (6.)

Note

Default settings in the parameter tables are indicated with an asterisk (*) unless explicitly stated.

Remote Access (6.1.)

Access Control (6.1.1.)

Note

If access control is changed to limit remote access, it can only be reset via the handheld programmer.

Enables/disables the read/write access to parameters via remote communications.

Options		Read only	No changes are permitted via remote communications.
	*	Read Write	Changes are permitted.
		Restricted	Sets the status to Read only, with the potential for another HART device to change this parameter only, via remote communications.

Local Access (6.2.)

Write Protect (6.2.1.)

Note

This lock affects only the handheld programmer. A remote master can change configuration if **Access Control (6.1.1.)** is set to allow this.

Prevents any changes to parameters via the handheld programmer.

Options		Range: **0** to **9999**	
	*	Unlock value [stored in **PIN to Unlock (6.2.2.)**]	Lock Off
		Any other value	Lock On

- To turn Lock On, key in any value other than the Unlock Value stored in **PIN to Unlock (6.2.2.)**.
- To turn Lock Off, key in the Unlock Value stored in **PIN to Unlock (6.2.2.)**.

PIN to Unlock (6.2.2.)

Note

- Do not lose your Unlock Value: it cannot be displayed once **Write Protect (6.2.1.)** has been set to a different value.
- Valid only for operation via the handheld programmer.
- A reset to **Factory Defaults** will not restore the unlock value at time of shipping.

Stores the value to be entered in **Write Protect (6.2.1.)** to unlock programming. If **Write Protect (6.2.1.)** is set to a different value, **PIN to Unlock (6.2.2.)** does not display the Unlock value.

Handheld Programmer Values	Range: **0** to **9999**	
	Value when shipped: 1954. Not restored by a reset to Factory Defaults.	
	– – – –	Display when Lock is on

Language (7.)

Selects the language to be used on the LCD.

Options	*	English
		Deutsch
		Français
		Español

8.1 Alphabetical parameter list

Note

For a detailed list of parameters see Parameter Reference (Page 107). Maintenance Parameters are not listed below. See **Remaining Device Lifetime (4.2.)**, **Remaining Sensor Lifetime (4.3.)**, **Service Schedule (4.4.)** and **Calibration Schedule (4.5.)** for those parameters.

20 mA Setpoint (2.6.3.)

4 mA Setpoint (2.6.2.)

Access Control (6.1.1.)

Algorithm (2.8.4.1.)

Analog Output Scaling (2.6.)

Auto False Echo Suppression (2.8.7.1.)

Auto False Echo Suppression Range (2.8.7.2.)

Breakpoint 1-9 (2.8.8.1.)

Breakpoint 10-18 (2.8.8.2.)

Breakpoint 19-27 (2.8.8.3.)

Breakpoint 28-36 (2.8.8.4.)

Breakpoint 37-40 (2.8.8.5.)

Calibration (2.3.)

CLEF Range (2.8.4.4.)

Communication (5.)

Confidence (2.8.6.1.)

Current Internal Temperature (3.2.1.)

Current Output Function (2.6.1.)

Damping Filter (2.2.4.)

Device (2.1.)

Device Address (5.1.)

Diagnostics (3.)

Distance Measurement (2.8.9.3.)

Echo Lock (2.8.5.1.)

Echo Profile (3.1.)

Echo Quality (2.8.6.)

Echo Select (2.8.4.)

Echo Strength (2.8.6.2.)

Echo Threshold (2.8.4.3.)

Electronics Temperature (3.2.)
Empty Rate per Minute (2.4.3.)
Fail-safe (2.5.)
Fail-Safe mA Value (2.5.3.)
Far Range (2.8.2.)
Fill Rate per Minute (2.4.2.)
Firmware Revision (2.1.2.)
Hardware Revision (2.1.1.)
High Calibration Pt. (2.3.2.)
Highest value (3.2.2.)
Hover Level (2.8.7.3.)
Language (7.)
LCD Contrast (4.10.)
LCD Fast Mode (4.9.)
Level 1 (2.7.2.1.)
Level Measurement (2.8.9.1.)
Linearization (2.7.)
Loader Revision (2.1.3.)
Local Access (6.2.)
LOE Timer (2.5.2.)
Low Calibration Pt. (2.3.1.)
Lowest value (3.2.3.)
mA Output Value (2.6.6.)
Manufacture Date (4.6.)
Master Reset (4.1.)
Material (2.2.3.)
Material Level (2.5.1.)
Maximum mA limit (2.6.5.)
Maximum Volume (2.7.1.2.)
Measured Values (2.8.9.)
Memory Test (4.12.)
Menu Timeout (2.1.5.)
Minimum mA limit (2.6.4.)
Near Range (2.8.1.)
Noise Average (2.8.6.3.)

Order Option (2.1.4.)
PIN to Unlock (6.2.2.)
Position Detect (2.8.4.2.)
Power-on Resets (4.8.)
Powered Hours (4.7.)
Propagation Factor (2.8.3.)
Quick Start (1.)
Quick Start Wizard (1.1.)
Rate (2.4.)
Remote Access (6.1.)
Response Rate (2.4.1.)
Sampling (2.8.5.)
Sampling Down (2.8.5.3.)
Sampling Up (2.8.5.2.)
Shaper Mode (2.8.7.4.)
Signal Processing (2.8.)
Secondary Value (4.11.)
Security (6.)
Sensor (2.2.)
Sensor Mode (2.2.2.)
Sensor Offset (2.3.3.)
Service (4.)
Setup (2.)
Space Measurement (2.8.9.2.)
Table 1-8 (2.7.2.)
Table 9-16 (2.7.3.)
Table 17-24 (2.7.4.)
Table 25-32 (2.7.5.)
TVT Setup (2.8.7.)
TVT Shaper (2.8.8.)
Units (2.2.1.)
Vessel Dimension A (2.7.1.3.)
Vessel Dimension L (2.7.1.4.)
Vessel Shape (2.7.1.1.)
Volume (2.7.1.)

Volume 1 (2.7.2.2.)

Volume Measurement (2.8.9.4.)

Write Protect (6.2.1.)

Service and maintenance

9

9.1 Basic safety information

WARNING

Impermissible repair of the device

- Repair must be carried out by Siemens authorized personnel only.

CAUTION

Releasing button lock

Improper modification of parameters could influence process safety.

- Make sure that only authorized personnel may cancel the button locking of devices for safety-related applications.

9.2 Cleaning

The radar device requires no cleaning under normal operating conditions.

Under severe operating conditions, the antenna may require periodic cleaning. If cleaning becomes necessary:

- Note the antenna material and the process medium, and select a cleaning solution that will not react adversely with either.
- Remove the device from service and wipe the antenna clean using a cloth and suitable cleaning solution.

NOTICE

Penetration of moisture into the device

Device damage.

- Make sure when carrying out cleaning and maintenance work that no moisture penetrates the inside of the device.

WARNING

Electrostatic charge

Danger of explosion in hazardous areas if electrostatic charges develop, for example, when cleaning plastic surfaces with a dry cloth.

- Prevent electrostatic charging in hazardous areas.

9.3 Maintenance and repair work

The device is maintenance-free. However, a periodic inspection according to pertinent directives and regulations must be carried out.

An inspection can include, for example, check of:

- Ambient conditions
- Seal integrity of the process connections, cable entries, and cover
- Reliability of power supply, lightning protection, and grounds

WARNING

Maintenance during continued operation in a hazardous area

There is a risk of explosion when carrying out repairs and maintenance on the device in a hazardous area.

- Isolate the device from power.

- or -

- Ensure that the atmosphere is explosion-free (hot work permit).

WARNING

Humid environment

Risk of electric shock.

- Avoid working on the device when it is energized.
- If working on an energized device is necessary, ensure that the environment is dry.
- Make sure when carrying out cleaning and maintenance work that no moisture penetrates the inside of the device.

9.3.1 Unit repair and excluded liability

All changes and repairs must be done by qualified personnel, and applicable safety regulations must be followed. Please note the following:

- The user is responsible for all changes and repairs made to the device.
- All new components must be provided by Siemens.
- Restrict repair to faulty components only.
- Do not re-use faulty components.

9.3.2 Part replacement

If the antenna, lens, secondary O-ring, and spring washers require replacement due to damage or failure, they may be replaced without the need for re-calibration if of the same type and size.

Replacing the antenna

Changing to a different antenna type may be performed by a Siemens authorized repair center or personnel.

If the electronics or enclosure require replacement due to damage or failure, please ensure the correct antenna version is used, otherwise a re-calibration will need to be performed by Siemens authorized personnel.

Replacing the lens

1. Remove existing lens by turning it counter-clockwise until it separates from the unit.
2. Replace the O-ring between the lens and process connection with a new one.
3. Carefully thread the replacement lens, and turn it clockwise until resistance is encountered. Do not over-tighten the lens, as this will permanently damage it.
4. For flange installation instructions, see Flanged versions (Page 32).

Note

After installation of the new lens onto the flanged encapsulated antenna version and before mounting on the vessel/tank, some lenses may not appear to lie flush on the device, but this is normal and will not impact performance.

Raised-Face flange kits

Description	Process connection size	Part number
Replacement TFM™ 1600 PTFE Lens and Spring Washer Kit for ASME B16.5 Class 150 raised faced	2"	A5E32462817
	3"	A5E32462819
	4"	A5E32462820
	6"	A5E32462821

Description	Process connection size	Part number
Replacement TFM™ 1600 PTFE Lens and Spring Washer Kit for JIS B 2220 10K raised Face	50A	A5E32462822
	80A	A5E32462823
	100A	A5E32462824
	150A	A5E32462825
Replacement TFM™ 1600 PTFE Lens and Spring Washer Kit for EN 1092-1 PN10/16 type B1 raised face	DN50	A5E32462826
	DN80	A5E32462827
	DN100	A5E32462828
	DN150	A5E32462829

Spare part kits

Description	Process connection size	Part number
ISO2852, Hygienic encapsulated antenna Lens and silicon O-ring	2"	A5E32572731
	3"	A5E32572745
	4"	A5E32572747
DIN11851, Hygienic encapsulated antenna Lens and silicon O-ring	DN50	A5E32572758
	DN80	A5E32572770
	DN100	A5E32572772
DIN11864-1, Hygienic encapsulated antenna Lens and silicon O-ring	DN50	A5E32572773
	DN80	A5E32572779
	DN100	A5E32572782
DIN11864-2/3, Hygienic encapsulated antenna Lens and silicon O-ring	DN50	A5E32572785
	DN80	A5E32572790
	DN100	A5E32572791
Tuchenhagen, Hygienic encapsulated antenna Lens and silicon O-ring	Type F	A5E32572794
	Type N	A5E32572795

Note

For more information about accessories such as clamps, seals and process connections, please see the catalog on the product page (http://www.siemens.com/LR250) (http://www.siemens.com/LR250).

9.4 Disposal

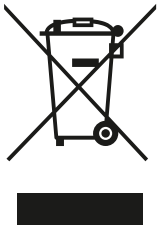

Devices described in this manual should be recycled. They may not be disposed of in the municipal waste disposal services according to the Directive 2012/19/EC on waste electronic and electrical equipment (WEEE).

Devices can be returned to the supplier within the EC, or to a locally approved disposal service for eco-friendly recycling. Observe the specific regulations valid in your country.

Further information about devices containing batteries can be found at: Information about battery / product return (WEEE) (https://support.industry.siemens.com/cs/document/109479891/)

9.5 Return procedure

Enclose the bill of lading, return document and decontamination certificate in a clear plastic pouch and attach it firmly to the outside of the packaging.

Required forms

- Delivery note
- Return goods delivery note (http://www.siemens.com/processinstrumentation/returngoodsnote)
  with the following information:
  - Product (item description)
  - Number of returned devices/replacement parts
  - Reason for returning the item(s)
- Decontamination declaration (http://www.siemens.com/sc/declarationofdecontamination)
  With this declaration you warrant "that the device/replacement part has been carefully cleaned and is free of residues. The device/replacement part does not pose a hazard for humans and the environment."
  If the returned device/replacement part has come into contact with poisonous, corrosive, flammable or water-contaminating substances, you must thoroughly clean and decontaminate the device/replacement part before returning it in order to ensure that all hollow areas are free from hazardous substances. Check the item after it has been cleaned. Any devices/replacement parts returned without a decontamination declaration will be cleaned at your expense before further processing.

Diagnosing and troubleshooting 10

10.1 Communication troubleshooting

1. Check the following:
   - There is power at the device.
   - The LCD shows the relevant data.
   - The device can be programmed using the handheld programmer.
   - If any fault codes are being displayed see General Fault Codes (Page 160) for a detailed list.
2. Verify that the wiring connections are correct.
3. See the table below for specific symptoms.

Symptom	Corrective action
The device cannot be programmed via the handheld programmer.	• Ensure **Write Protect (6.2.1.)** is set to the unlock value.
You try to set a SITRANS LR250 parameter via remote communications but the parameter remains unchanged.	• Ensure **Write Protect (6.2.1.)** is set to the unlock value, then try setting the parameter via the handheld programmer. • Ensure **Access Control (6.1.1.)** is set to Read/ Write. • Some parameters can be changed only when the device is not scanning. Try pressing Mode to put the device into PROGRAM mode.

If you continue to experience problems go to our website and check the FAQs for SITRANS LR250:

Product page (http://www.siemens.com/LR250), or contact your Siemens representative.

10.2 Device status icons

Icon	Priority Level	Meaning
	1	• Maintenance alarm • Measurement values are not valid
	2	• Maintenance warning: maintenance demanded immediately • Measured signal still valid
	3	• Maintenance required • Measured signal still valid
	1	• Process value has reached an alarm limit

Icon	Priority Level	Meaning
	2	• Process value has reached a warning limit
	3	• Process value has reached a tolerance limit
	1	• Configuration error • Device will not work because one or more parameters/components is incorrectly configured
	2	• Configuration warning • Device can work but one or more parameters/components is incorrectly configured
	3	• Configuration changed • Device parameterization not consistent with parameterization in project. Look for info text.
	1	• Manual operation (local override) • Communication is good; device is in manual mode.
	2	• Simulation or substitute value • Communication is good; device is in simulation mode or works with substitute values.
	3	• Out of operation • Communication is good; device is out of action.
		• Data exchanged
		• No data exchange
		• Write access enabled
		• Write access disabled

10.3 General fault codes

Note

- If more than one fault is present, the device status indicator and text for each fault alternate at 2 second intervals.
- Some faults cause the device to go to Fail-safe mode (Fault 52). These are indicated with an asterisk (*).

Code/ Icon		Meaning	Corrective Action
S: 0	*	The device was unable to get a measurement within the Fail-safe LOE Timer period. Possible causes: faulty installation, antenna material buildup, foaming/other adverse process conditions, invalid configuration range.	• Ensure installation details are correct. • Ensure no antenna material buildup. Clean if necessary. • Adjust process conditions to minimize foam or other adverse conditions. • Correct configuration range. • If fault persists, contact your local Siemens representative.
S: 2	*	Unable to collect profile because of a power condition that is outside the operating range of the device.	Repair required: contact your local Siemens representative.
S: 3		Device is nearing its lifetime limit according to the value set in Maintenance Required Limit.	Replacement is recommended
S: 4		Device is nearing its lifetime limit according to the value set in Maintenance Demanded Limit.	Replacement is recommended.
S: 6		Sensor is nearing its lifetime limit according to the value set in Maintenance Required Limit.	Replacement is recommended.
S: 7		Sensor is nearing its lifetime limit according to the value set in Maintenance Demanded Limit.	Replacement is recommended.
S: 8		Service interval as defined in Maintenance Required Limit has expired.	Perform service.
S: 9		Service interval as defined in Maintenance Demanded Limit has expired.	Perform service.
S: 11		Internal temperature sensor failure.	Repair required: contact your local Siemens representative.
S: 12		Internal temperature of device has exceeded specifications: it is operating outside its temperature range.	• Relocate device and/or lower process temperature enough to cool device. • Inspect for heat-related damage and contact your local Siemens representative if repair is required. • Fault code will persist until a manual reset is performed using SIMATIC PDM or the LCD interface.
S: 17		Calibration interval as defined in Maintenance Required Limit has expired.	Perform calibration.

Code/ Icon		Meaning	Corrective Action
S: 18		Calibration interval as defined in Maintenance Demanded Limit has expired.	Perform calibration.
S: 28	*	Internal device failure caused by a RAM memory error.	Repair required: contact your local Siemens representative.
S: 29	*	EEPROM damaged.	Repair required: contact your local Siemens representative
S: 31	*	Flash error.	Repair required: contact your local Siemens representative
S: 33	*	Factory calibration for the internal temperature sensor has been lost.	Repair required: contact your local Siemens representative
S: 34	*	Factory calibration for the device has been lost.	Repair required: contact your local Siemens representative
S: 35	*	Factory calibration for the device has been lost.	Repair required: contact your local Siemens representative
S: 36	*	Unable to start microwave module.	Repair required: contact your local Siemens representative
S: 37	*	Measurement hardware problem.	Repair required: contact your local Siemens representative
S: 38	*	Failure in the device electronics.	Repair required: contact your local Siemens representative
S: 43	*	Factory calibration for the radar receiver has been lost.	Repair required: contact your local Siemens representative.
S: 45	*	No valid boot program detected: firmware corrupt	Repair required: contact your local Siemens representative.
S: 48	*	User configuration is invalid. One or more of parameters: Low Calibration Point, High Calibration Point, Volume breakpoints, and/or Auto False-Echo Suppression, are set to invalid values.	• Reconfigure the unit. • Ensure the difference between High Calibration Point and Low Calibration Point is not less than or equal to zero; do a Master Reset.

Code/ Icon		Meaning	Corrective Action
S: 49	*	EEPROM corrupt.	Repair required: contact your local Siemens representative.
S: 50	*	EEPROM corrupt.	Repair required: contact your local Siemens representative.
S: 51	*	EEPROM corrupt.	Repair required: contact your local Siemens representative.
S: 52		Fail-safe is activated. Possible causes: 1. hardware failure 2. memory failure 3. Fail-safe LOE timer expired– possible causes: faulty installation, antenna material buildup, foaming/other adverse process conditions, invalid calibration range.	For 3: • Correct configuration; ensure installation is correct; • no antenna buildup; • adjust process conditions to minimize foaming/other adverse conditions; • correct calibration range. If fault persists, or for 1 and 2, contact your local Siemens representative.
S: 53	*	Configuration lost: one or more parameter settings have been lost. This may occur after a firmware upgrade causes user parameters to be reset.	Restore user parameters using SIMATIC PDM.

10.4 Operation troubleshooting

Operating symptoms, probable causes, and resolutions.

Symptom	Cause	Action
Display shows S: 0 LOE	level or target is out of range	• check specifications • check **Low Calibration Pt. (2.3.1.)** • increase **Confidence (2.8.6.1.)**
Display shows S: 0 LOE	material build-up on antenna	• clean the antenna • re-locate SITRANS LR250
Display shows S: 0 LOE	location or aiming: • poor installation • flange not level • Auto False Echo Suppression may be incorrectly applied	• check to ensure nozzle is vertical • ensure end of antenna protrudes from end of nozzle • review Auto False Echo Suppression (Page 228). • ensure Auto False Echo Suppression Range is set correctly

Symptom	Cause	Action
Display shows S: 0 LOE	antenna malfunction: • temperature too high • physical damage • excessive foam • multiple echoes	• check **Current Internal Temperature (3.2.1.)** • use foam deflector or stillpipe • relocate • use a defoamer • set **Algorithm (2.8.4.1.)** to **F** (First echo)
Reading does not change, but the level does	SITRANS LR250 processing wrong echo, for example, vessel wall, or structural member	• re-locate SITRANS LR250 • check nozzle for internal burrs or welds • rotate device 90° • use **Auto False Echo Suppression (2.8.7.1.)** • if necessary: see Auto False Echo Suppression (Page 228).
Measurement is consistently off by a constant amount	• setting for **Low Calibration Pt. (2.3.1.)** not correct • setting for **Sensor Offset (2.3.3.)** not correct	• check distance from sensor reference point to **Low Calibration Pt. (2.3.1.)** • check **Sensor Offset (2.3.3.)**
Screen blank	power error	• check nameplate rating against voltage supply • check power wiring or source
	too much load resistance	• change barrier type, or • remove something from the loop, or • increase supply voltage • reduce wire distance or use larger gage wire
Reading erratic	echo confidence weak	• refer to **Confidence (2.8.6.1.)** • use **Auto False Echo Suppression (2.8.7.1.)** and **Auto False Echo Suppression Range (2.8.7.2.)** • use foam deflector or stillpipe
	liquid surface vortexed	• decrease **Fill Rate per Minute (2.4.2.)** • relocate device to side pipe • increase confidence threshold in **Echo Threshold (2.8.4.3.)**
	material filling	• Re-locate SITRANS LR250
Reading response slow	**Fill Rate per Minute (2.4.2.)** setting incorrect	• increase measurement response if possible
Reads correctly but occasionally reads high when vessel is not full	• detecting close range echo • build up near top of vessel or nozzle • nozzle problem	• clean the antenna • use **Auto False Echo Suppression (2.8.7.1.)** and **Auto False Echo Suppression Range (2.8.7.2.)**
Level reading lower than actual material level	• material is within Near Range zone • multiple echoes processed	• decrease **Near Range (2.8.1.)** (minimum value depends on antenna type) • raise SITRANS LR250 • ensure **Algorithm (2.8.4.1.)** is set to F (First echo)
	• vessel near empty and low dK material	• ensure **Material (2.2.3.)** selection is LIQUID LOW DK • set **Position Detect (2.8.4.2.)** to Hybrid • set **CLEF Range (2.8.4.4.)** to 0.5 m

Technical data

11

Note

Device specifications

Siemens makes every attempt to ensure the accuracy of these specifications but reserves the right to change them at any time.

11.1 Power

⚠	General Purpose Intrinsically Safe Non-Sparking Non-incendive (FM/CSA US/Canada only)	Nominal 24 V DC at 550 Ohm
⚠	Flameproof Increased Safety Explosion-proof (FM/CSA US/Canada only)	Nominal 24 V DC at 250 Ohm

- Maximum 30 V DC
- 4 to 20 mA
- Max. startup current see Startup Behaviour (Page 246).

11.2 Performance

Reference operating conditions according to IEC 60770-1

Ambient temperature	15 to 25 °C (59 to 77 °F)
Humidity	45 to 75% relative humidity
Ambient pressure	860 to 1060 mbar a (86000 to 106000 N/m^2 a)
Interference reflections	minimum 20 dB lower than the main target reflections

Measurement Accuracy (measured in accordance with IEC 60770-1)

Maximum measured error	= 3 mm (0.12")[1) 2) 3)] including hysteresis and non-repeatability
Frequency	K-band

Maximum measurement range[4]	1.5" antenna	10 m (32.8 ft)[5]
	2" threaded PVDF antenna	
	2"/DN50/50A Flanged encapsulated antenna (FEA)	
	2" ISO 2852, DN50 DIN 11864-1/2/3, DN50 DIN11851, Tuchenhagen Types F and N Hygienic encapsulated antenna (HEA)	
	all other versions	20 m (65.6 ft)
Minimum detectable distance	50 mm (2") from end of antenna - stainless horns, PTFE flanged versions[6] 100 mm (4") from the end of the antenna - aluminum horn, with polypropylene lens antenna version and PVDF versions	
Update time[7]	minimum 1 second, depending on settings for **Response Rate (2.4.1.)** and **LCD Fast Mode (4.9.)**	
Influence of ambient temperature	< 0.003%/K (average over full temperature range, referenced to maximum range)	
Long-term stability	<0.1 % over 60 months	
Dielectric constant of material measured	dK > 1.6 [antenna and application dependent[8]]	
Memory	non-volatile EEPROM	
	no battery required	

[1] The statistical accuracy is typically 3 mm (0.12") 90% of the time, when tested in accordance with IEC 60770-1.

[2] Under severe EMI/EMC environments per IEC 61326-1 or NAMUR NE21, the device error may increase to a maximum of 10 mm (0.4").

[3] For 2" threaded PVDF, Flanged encapsulated antennas and Hygienic encapsulated antennas, the maximum measured error <500 mm from the sensor reference point =25 mm (1").

[4] From sensor reference point: see Dimensions (Page 175).

[5] 20 m (65.6 ft) possible in a stillpipe/bypass

[6] Minimum range is antenna length + 50 mm (2"). See Dimension drawings (Page 175).

[7] Reference conditions: **Response Rate (2.4.1.)** set to **FAST, LCD Fast Mode (4.9.)** set to **ON**.

[8] For 1.5" (40 mm) antenna, 2" (50 mm) threaded PVDF antenna, 2"/DN50/50A flanged encapsulated antenna, and 2" ISO 2852, DN50 DIN 11864-1/2/3, DN50 DIN11851, Tuchenhagen Types F and N hygienic encapsulated antenna the minimum dK is limited to 3 unless a stillpipe is used.

See Stainless steel flanged horn antenna (Page 186).

See PTFE Flanged encapsulated antenna (3"/DN80/80A sizes and larger) (Page 192).

See Hygienic encapsulated antenna (2" ISO 2852 sanitary clamp) (Page 194).

11.3 Interface

Analog output	Signal range	4 to 20 mA (± 0.02 mA accuracy) upper limit 20 to 23 mA adjustable
	Fail signal	3.6 mA to 23 mA [For more details, see Fail-safe Mode] (Page 232)
Communication: HART[1)]	Load	230 to 600 Ω, 230 to 500 Ω when connecting a coupling module
	Max. line length	multi-wire: ≤ 1500 m (4921 ft)
	Protocol	HART, Version 5.1
Configuration	Remote	Siemens SIMATIC PDM or AMS Device Manager (PC)
	Local	Siemens infrared handheld programmer, or HART handheld communicator
	Display (local)[2)]	graphic LCD, with bar graph representing level

1) See A.6.3 for details on version exclusions

2) Display quality will be degraded in temperatures below –25 °C (–13 °F) and above +65 °C (+149 °F).

Curve 2 (Flameproof, Increased Safety, Explosion-proof) (Page 246)

11.4 Mechanical

Transmitter housing	Stainless steel horn version	Process connection	Flange	2, 3, 4" (ASME B16.5 raised face 150 lb, 300 lb) DN50, DN80, DN100, DN150 (EN 1092-1 TYPE B1 raised face PN10/16, PN25/40), 50A, 80A, 100A (10K JIS B 2220 flat faced)
			Threaded	1.5" NPT (ASME B1.20.1), R (BSPT, EN 10226-1), G (BSPP, EN ISO 228-1), 2" NPT (ASME B1.20.1), R (BSPT, EN 10226-1), G (BSPP, EN ISO 228-1), 3" NPT (ASME B1.20.1), R (BSPT, EN 10226-1), G (BSPP, EN ISO 228-1)
		Wetted materials		316L stainless steel with PTFE emitter optional Alloy N06022/2.4602 (Hastelloy® C-22 or equivalent) with PTFE emitter, FKM or FFKM seal
		Horn		1.5" (40 mm), 2" (50 mm), 3" (80 mm), and 4" (100 mm) horn, optional 100 mm (4") horn extension
	Aluminum horn, with polypropylene lens antenna version	Process connection	Flange	Universal mount ANSI/DIN/JIS 3" (80 mm), 4" (100 mm), 6" (150 mm)
		Wetted materials		Polypropylene, FKM seal
		Horn		3" (80 mm) polyester powder coated exterior
	PTFE flanged Encapsulated	Process connection	Flange	2, 3, 4, 6" (ASME 150 lb); DN50, DN80, DN100, DN150 (PN10/16); 50A, 80A, 100A, 150A (JIS 10K)
		Wetted materials		TFM™ 1600 PTFE lens
	PTFE hygenic encapsulated	Hygienic encapsulated antenna (HEA) connection		ISO 2852 (2, 3, 4")DIN 11851 (DN50, DN80, DN100)DIN 11864-1/2/3 (DN50, DN80, DN100)Tuchenhagen (Type F [50 mm] and Type N [68 mm])316L /1.4404 or 316L /1.4435 stainless steel
		Wetted materials		316L /1.4404 or 316L /1.4435 stainless steel TFM™ 1600 PTFE lens EPDM or FKM available as accessories
	PVDF threaded	Thread sizes		2" NPT [(Taper), ASME B1.20.1], 2" [(BSPT), EN 10226], 2" [(BSPP), EN ISO 228-1]
		Wetted materials		PVDF (Polyvinylidene fluoride)
Enclosure		Construction		aluminum, polyester powder-coated
		Conduit entry		2 x M20x1.5, or 2 x ½" NPT
		Ingress protection		Type 4X, Type 6, IP67, IP68

Weight (excluding extensions)	1.5" threaded connection with 1.5" horn antenna	approximately 5.1kg (11.2 lb)
	2" threaded connection with 2" horn antenna	approximately 5.5 kg (12.1 lb)
	3" threaded connection with 3" horn antenna	approximately 7.0 kg (15.4 lb)
	Aluminum horn, with polypropylene lens antenna version with 3" flange	approximately 3.4 kg (7.5 lb)
	2" threaded PVDF antenna	approximately 3.3 kg (7.3 lb)
	DN50 PN10/16 or 2" 150 lb flat-face flange with 2" horn antenna	approximately 8 kg (17.6 lb)
	DN100 PN25/40 or 4" ASME 300 lb flat-face flange with 4" horn antenna	approximately 17.4 kg (38.3 lb)
	DN50 PN10/16 raised-face flange with 2" horn antenna	approximately 6 kg (13.2 lb)
	DN100 PN25/40 raised-face flange with 4" horn antenna	approximately 11.3 kg (24.9 lb)
	2" ASME 150 lb FEA	approximately 7.0 kg (15.4 lb)
	3" ASME 150 lb FEA	approximately 10.7 kg (23.6 lb)
	4" ASME 150 lb FEA	approximately 13.1 kg (28.9 lb)
	6" ASME 150 lb FEA	approximately 17.7 kg (39 lb)
	DN50 PN10/16 FEA	approximately 7.1 kg (15.7 lb)
	DN80 PN10/16 FEA	approximately 10.1 kg (22.3 lb)
	DN100 PN10/16 FEA	approximately 11.1 kg (24.5 lb)
	DN150 PN10/16 FEA	approximately 15.9 kg (35.1 lb)
	50 A JIS 10K FEA	approximately 6.5 kg (14.3 lb)
	80 A JIS 10K FEA	approximately 9 kg (19.8 lb)
	100 A JIS 10K FEA	approximately 10.1 kg (22.3 lb)
	150 A JIS 10K	approximately 16.3 kg (35.9 lb)
	2" ISO2852 HEA	approximately 4.7 kg (10.4 lb)
	3" ISO2852 HEA	approximately 6.3 kg (13.9 lb)
	4" ISO2852 HEA	approximately 6.8 kg (15 lb)
	DN50 DIN 11864-1 HEA	approximately 4.8 kg (10.6 lb)
	DN80 DIN 11864-1 HEA	approximately 6.7 kg (14.8 lb)
	DN100 DIN 11864-1 HEA	approximately 7.1 kg (15.7 lb)
	DN50 DIN 11864-2 HEA	approximately 5.0 kg (11 lb)
	DN80 DIN 11864-2 HEA	approximately 7.2 kg (15.9 lb)
	DN100 DIN 11864-2 HEA	approximately 7.9 kg (17.4 lb)
	DN50 DIN 11864-3 HEA	approximately 4.8 kg (10.6 lb)
	DN80 DIN 11864-3 HEA	approximately 6.6 kg (14.6 lb)
	DN100 DIN 11864-3 HEA	approximately 7.2 kg (15.9 lb)
	DN50 DIN 11851 HEA	approximately 4.8 kg (10.6 lb)
	DN80 DIN 11851 HEA	approximately 6.8 kg (15 lb)
	DN100 DIN 11851 HEA	approximately 7.2 kg (15.9 lb)
	Tuchenhagen Type F HEA	approximately 4.8 kg (10.6 lb)
	Tuchenhagen Type N HEA	approximately 4.9 kg (10.8 lb)

[a] For use with 1.5" (40 mm) horn antennas only.

11.5 Environmental

Note

- For the specific configuration you are about to use or install, check transmitter nameplate and see Approvals (Page 171).
- Use appropriate conduit seals to maintain IP or NEMA rating.

Location	indoor/ outdoor
Altitude	5000 m (16,404 ft) max.
Ambient temperature	−40 to +80 °C (−40 to +176 °F)
Relative humidity	suitable for outdoor Type 4X/NEMA 4X, Type 6/NEMA 6, IP67, IP68 enclosure (see note above)
Installation category	I
Pollution degree	4

11.6 Process

Note

The maximum temperature is dependent on the process connection, antenna materials, and vessel pressure. For more detailed information see Maximum Process Temperature Chart (Page 233) and Process Pressure/Temperature derating curves (Page 234).

Temperature at process connection	Stainless steel antenna (Threaded or Flanged):	with FKM O-ring	−40 to +200 °C (−40 to +392 °F)
		with FFKM O-ring	−20 to +200 °C (−4 to +392 °F)
	Aluminum horn, with polypropylene lens antenna version, threaded PVDF antenna:		−40 to +80 °C (−40 to +176 °F)
	PTFE flanged encapsulated antenna (FEA)		-40 to +170 °C (−40 to +338 °F)
	Hygienic encapsulated antenna (HEA)		-40 to +170 °C (−40 to +338 °F)
			with FKM seals used on process connection: -20 to +170 °C (-4 to +338 °F)
			with EPDM seals used on process connection: -40 to +120 °C (-40 to +248 °F)
Pressure (vessel)			Refer to process connection tag and Process Pressure/Temperature derating curves (Page 236).

11.7 Approvals

Note

The device nameplate lists the approvals that apply to your device.

Application type	LR250 version	Approval rating	Valid for:
Non-hazardous	General purpose	$CSA_{US/C}$, FM, CE, RCM	N. America, Europe
	Radio	Europe (RED), FCC, Industry Canada	

Application type	LR250 version	Approval rating	Valid for:
Hazardous	Intrinsically safe (Page 40)	ATEX II 1G, Ex ia IIC T4 Ga ATEX II 1D, Ex ia ta IIIC T100 °C Da	Europe
		IECEx SIR 05.0031X, Ex ia IIC T4 Ga Ex ia ta IIIC T100 °C Da	International
		FM/CSA Class I, Div. 1, Groups A, B, C, D Class II, Div. 1, Groups E, F, G Class III T4	US/Canada
		INMETRO: DNV 12.0087 X Ex ia IIC T4 Ga Ex ia ta IIIC T100 °C Da IP65/IP67 -40 °C ≤ Ta ≤ +80 °C DNV #OCP 0017 ABNT NBR IEC 60079-0:2008, ABNT NBR IEC 60079-11:2009, ABNT NBR IEC 60079-26:2008, ABNT NBR IEC 60079-31:2011	Brazil
		NEPSI Ex ia IIC T4 Ga Ex iaD 20 T90 IP67 DIP A20 T_A 90 ºC	China
	Non-Sparking (Page 41)	ATEX II 3 G, Ex nA IIC T4 Gc	Europe
		NEPSI Ex nA IIC T4 Gc	China
	Non-incendive (Page 41)	FM/CSA Class I, Div. 2, Groups A, B, C, D T5	US/Canada
	Flameproof (Page 42)	ATEX II 1/2 GD, 1D, 2D IECEx SIR 08.0107X Ex d mb ia IIC T4 Ga/Gb Ex ia ta IIIC T100 °C Da	Europe and International
		INMETRO: DNV 12.0088 X Ex d ia mb IIC T4 Ga/Gb Ex ia ta IIIC T100 °C Da IP67 -40 °C ≤ Ta ≤ +80 °C U_m = 250 V DNV #OCP 0017 ABNT NBR IEC 60079-0:2008, ABNT NBR IEC 60079-1:2009, ABNT NBR IEC 60079-11:2009, ABNT NBR IEC 60079-18:2010, ABNT NBR IEC 60079-26:2008, ABNT NBR IEC 60079-31:2011	Brazil
	Increased safety (Page 42)	ATEX II 1/2 GD, 1D, 2D IECEx SIR 08.0107X Ex e mb ia IIC T4 Ga/Gb Ex ia ta IIIC T100 °C Da	Europe and International
		INMETRO: DNV 12.0088 X Ex e ia mb IIC T4 Ga/Gb Ex ia ta IIIC T100 °C Da IP67 -40 °C ≤ Ta ≤ +80 °C U_m = 250 V DNV #OCP 0017 ABNT NBR IEC 60079-0:2008, ABNT NBR IEC 60079-7:2008, ABNT NBR IEC 60079-11:2009,	Brazil

Application type	LR250 version	Approval rating		Valid for:
		ABNT NBR IEC 60079-18:2010, ABNT NBR IEC 60079-26:2008, ABNT NBR IEC 60079-31:2011		
	Flameproof (Page 42)/ Increased safety (Page 42)	NEPSI	Ex d ia mb IIC T4 Ga/Gb / Ex e ia mb IIC T4 Ga/Gb Ex iaD 20 T90 IP67 DIP A20 T_A 90 ºC	China
	Explosion proof (Page 43)	FM/CSA Class I, Div. 1, Groups A, B, C, D Class II, Div. 1, Groups E, F, G Class III T4		US/Canada
	Marine	Lloyd's Register of Shipping ABS Type Approval BV Type Approval		
Hygienic/Sanitary		EHEDG EL Class I EHEDG EL Class I Aseptic		International
		3-A Sanitary Standards		

11.8 Programmer (infrared keypad)

The battery is non-replaceable with a lifetime expectancy of 10 years in normal use. To estimate the lifetime expectancy, check the nameplate on the back for the serial number. The date of manufacture is encoded in the serial number. For example, the following was manufactured on March 5, 2016:

PBD/**H3050001**

H: year of manufacture (H is the alpha code referring to 2016; J refers to 2017 and so on).

3: month of manufacture

05: day of manufacture

0001: 4-digit sequential

Year 2010: Alpha code = A	Year 2016: Alpha code = H
Year 2011: Alpha code = B	Year 2017: Alpha code = J
Year 2012: Alpha code = C	Year 2018: Alpha code = K
Year 2013: Alpha code = D	Year 2019: Alpha code = L
Year 2014: Alpha code = E	Year 2020: Alpha code = M
Year 2015: Alpha code = F	

Siemens Milltronics Infrared IS (Intrinsically Safe) Handheld Programmer for hazardous and all other locations (battery is non-replaceable).

Approvals	CE FM/CSA Class I, II, III, Div. 1, Gr. A to G T6 ATEX 1 GD Ex ia op is IIC T4 Ga Ex ia op is IIIC T135°C Da IECEx Ex ia op is IIC T4 Ga Ex ia op is IIIC T135°C Da INMETRO Ex ia op is IIC T4 Ga Ex ia op is IIIC T135°C Da
Ambient temperature	−20 to +50 °C (−5 to +122 °F)
Interface	proprietary infrared pulse signal
Power	3 V non-replaceable lithium battery
Weight	150 g (0.3 lb)
Color	black
Part number	7ML1930-1BK

Dimension drawings

12

12.1 Universal polymeric flange

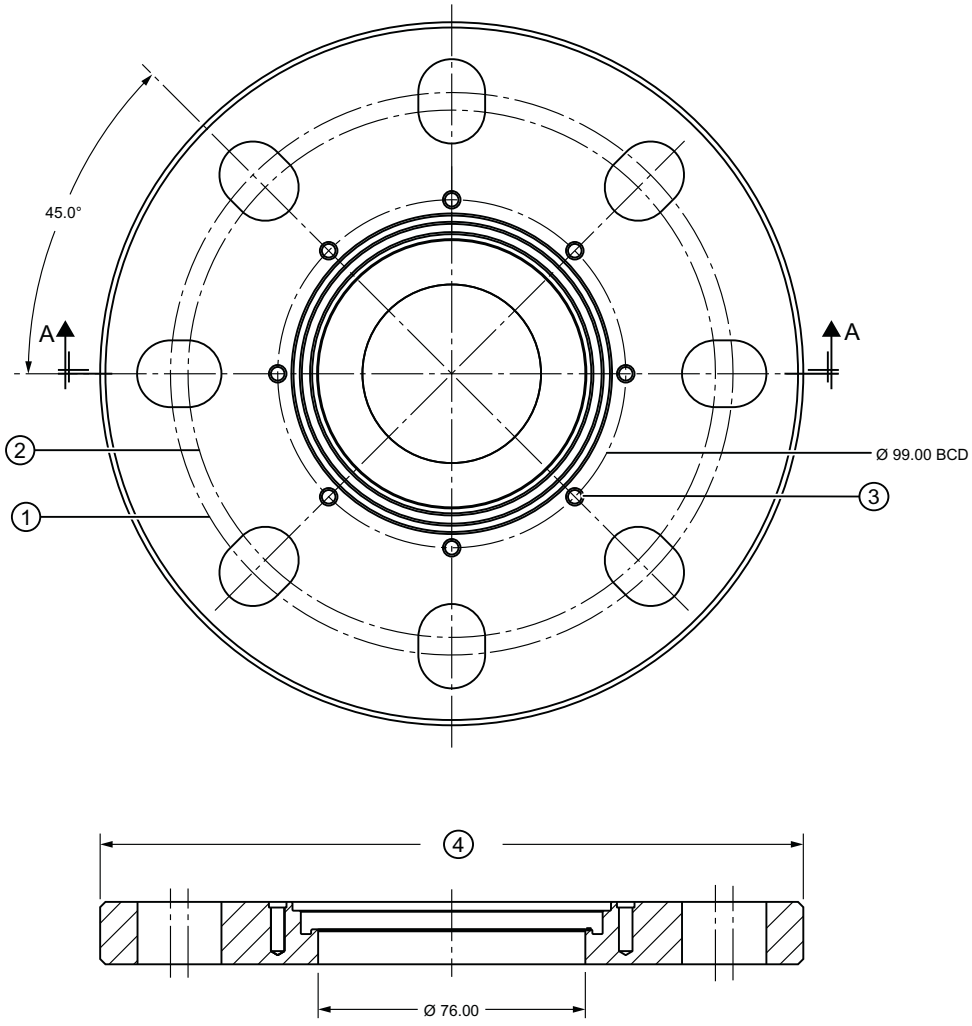

① Bolt hole circle max. diameter

② Bolt hole circle min. diameter

③ Bolt hole

④ Flange O.D.

Nominal pipe size	Flange O.D.	Thickness	Bolt hole circle max. ∅	Bolt hole circle min. Ø	Bolt hole radius	No. of slotted holes
3 (80)	7.87 (200)	0.7 (17.5)	6.30 (160)	5.91 (150)	0.37 (9.5)	8
4 (100)	9.00 (229)	0.7 (17.5)	7.52 (191)	6.89 (175)	0.37 (9.5)	8
6 (150)	11.22 (285)	0.7 (17.5)	9.53 (242)	9.45 (140)	0.45 (11.5)	8

Dimensions are in inch (mm)

12.2 Aluminum horn antenna

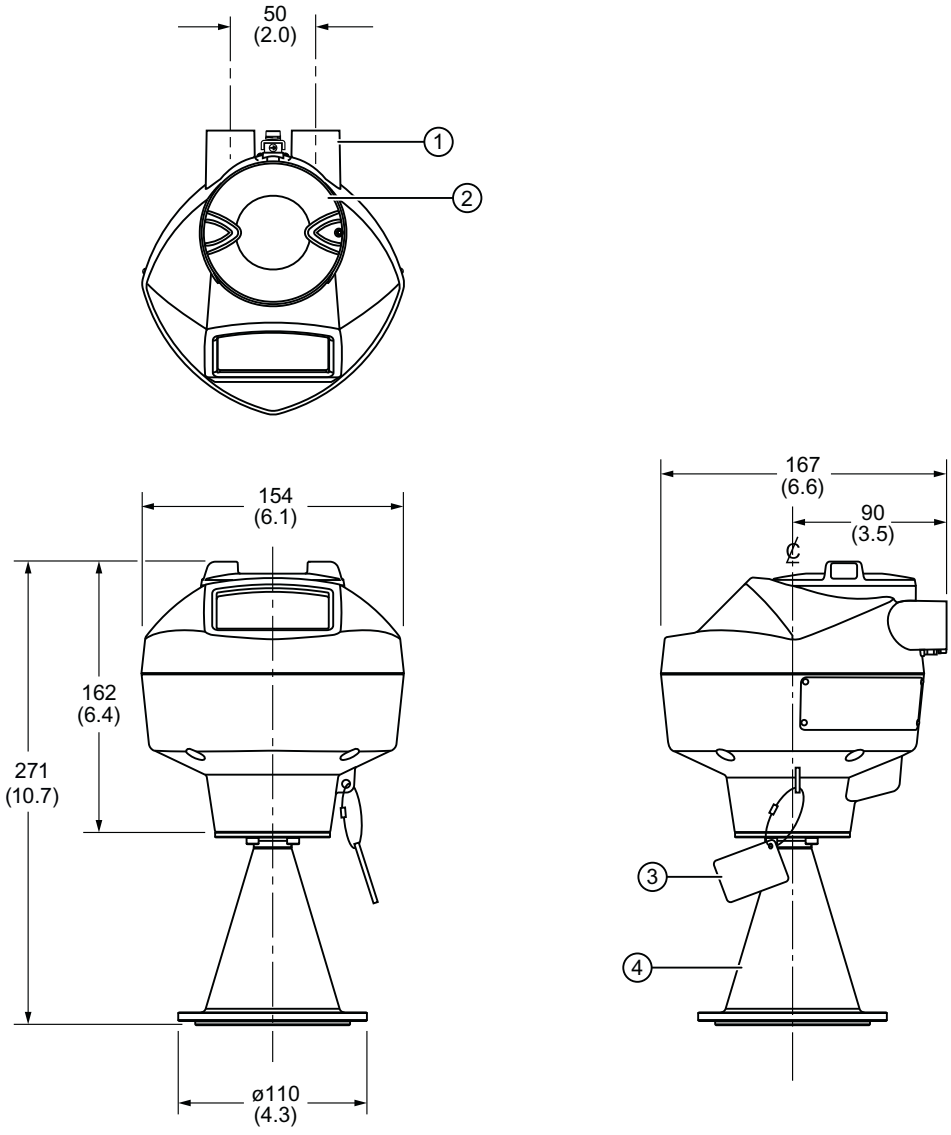

① ½" NPT or M20 cable entry
② threaded cover
③ process connection tag
④ Aluminum horn antenna

Dimensions in mm (inch)

12.3 Mounting bracket

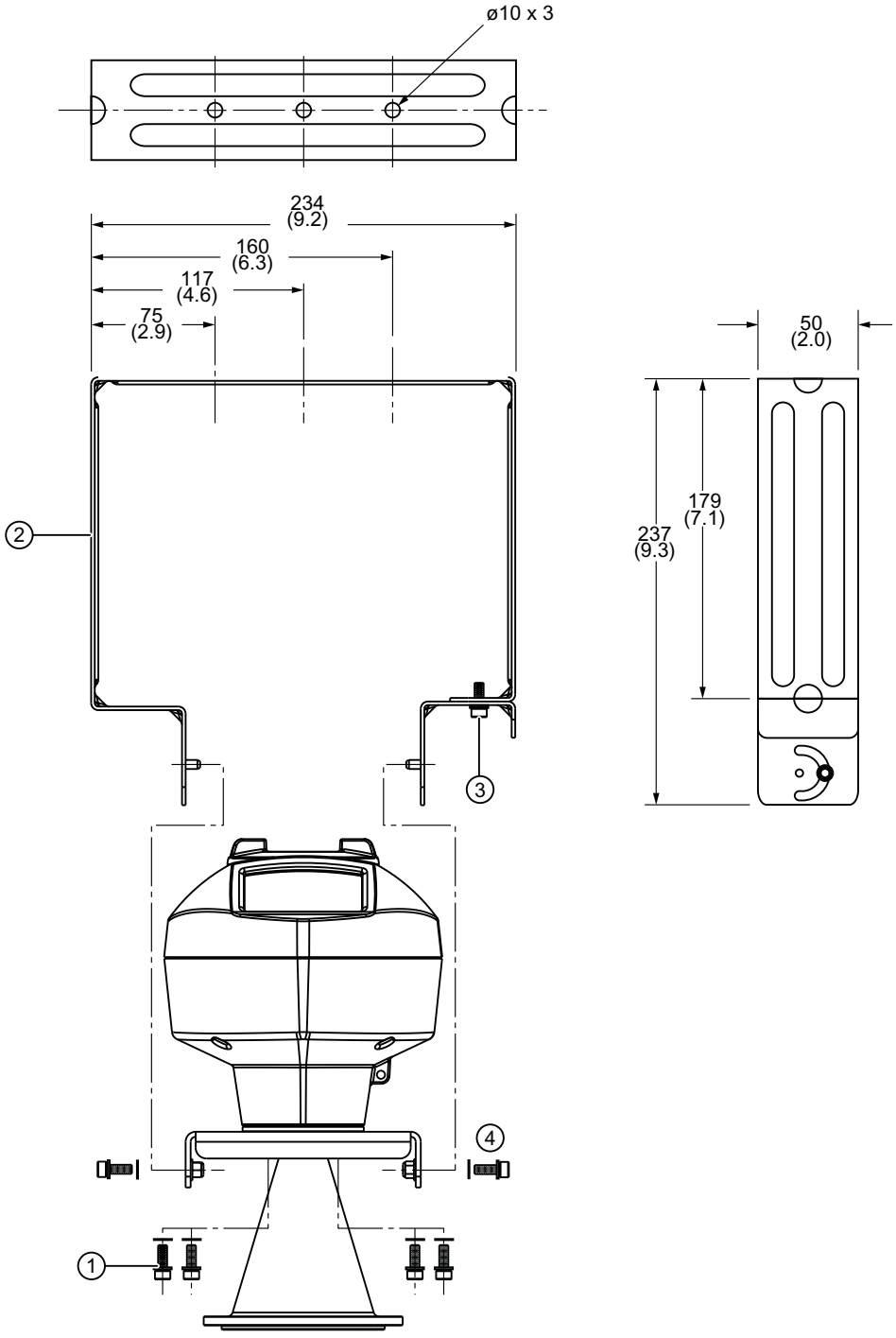

① Stainless steel socket head screw
(4) M5 x 0.8 x 14 screws, washers, lock washers

② Mounting bracket

③ (2) M5 x 0.8 x 16 screws, washers, lock washers

④ (2) M5 x 0.8 x 16 screws, washers, lock washers, nylon insert lock nuts

Dimensions in mm (inch)

Note

Torque the bracket screws to 5 Nm (3.7ft/lbs) to hold the aiming adjustment of the antenna.

Wall and ceiling mount for free space applications

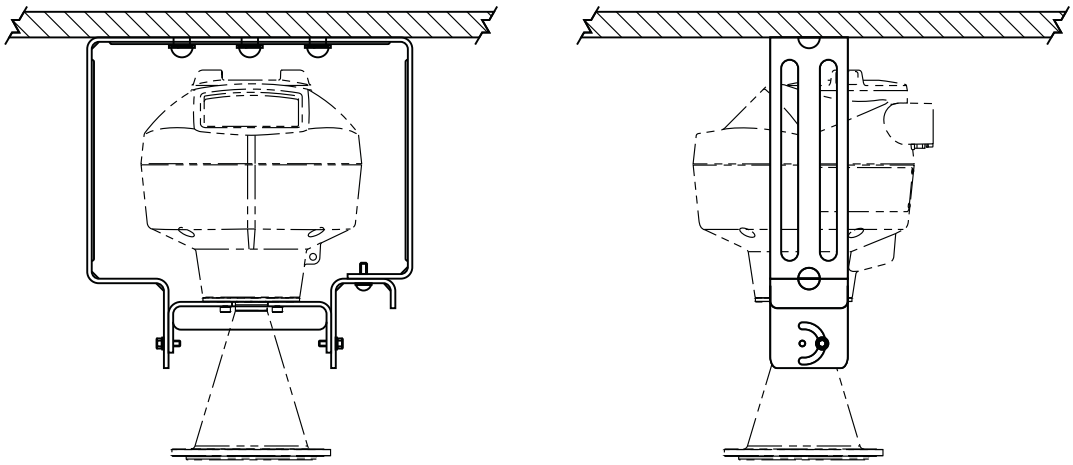

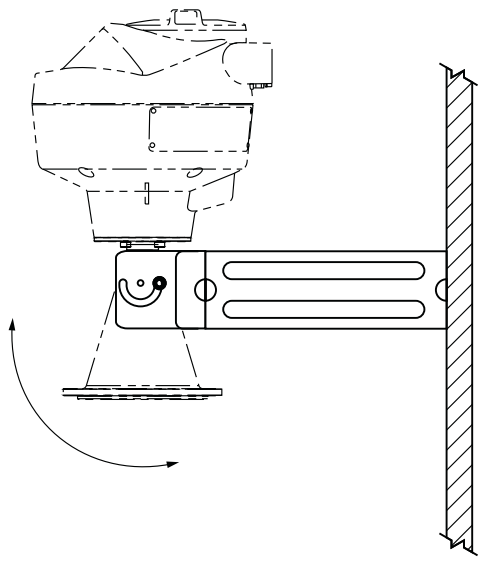

12.4 Aluminum horn with polypropylene lens antenna and polymeric flange

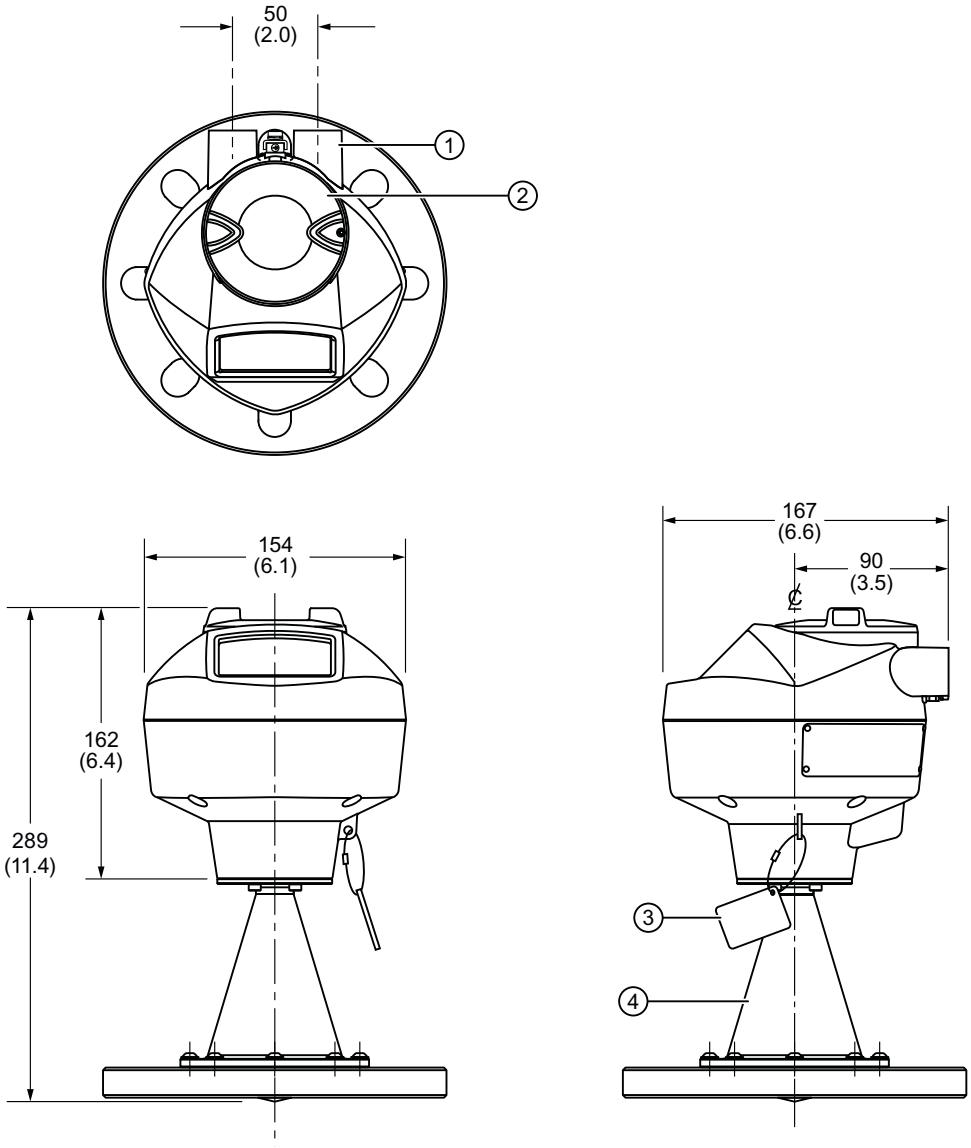

① ½" NPT or M20 cable entry
② threaded cover
③ process connection tag
④ aluminum horn with polypropylene lens antenna

Dimensions in mm (inch)

12.5 Stainless steel threaded horn antenna

Note

- Process temperature and pressure capabilities are dependent upon information on the process connection tag. Reference drawing listed on the tag is available for download from our website under **Support/Installation drawings/Level Measurement/Continuous - Radar/ LR250**:
  Product page (http://www.siemens.com/LR250)
- Process connection drawings are also available for download from the **Installation Drawings page**.
- Signal amplitude increases with horn diameter, so use the largest practical size.
- Optional extensions can be installed below the threads.

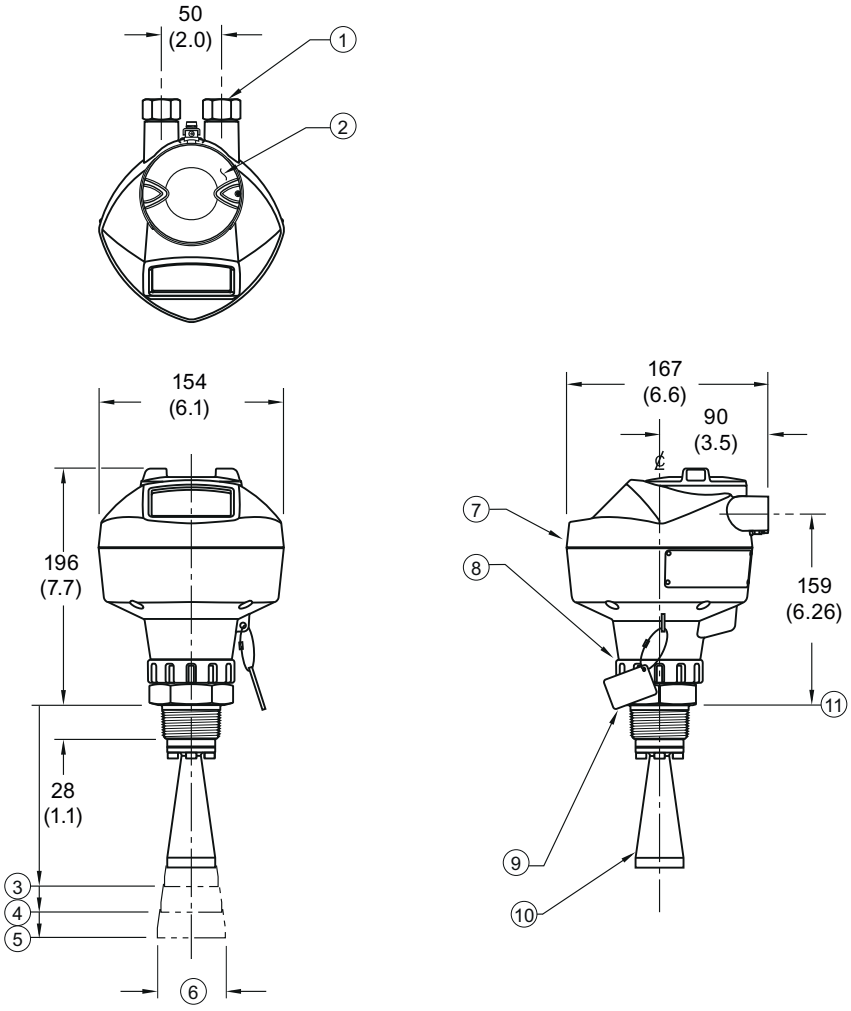

①	½" NPT cable entry, or M20 cable gland	⑦	enclosure/electronics
②	threaded cover	⑧	retaining collar
③	2" horn	⑨	process connection tag
④	3" horn	⑩	horn
⑤	4" horn	⑪	sensor reference point
⑥	horn O.D.		

Dimensions in mm (inch)

Threaded horn dimensions

Antenna Type	Antenna O.D., mm (inch)	Height to sensor reference point, mm (inch) [a]			Beam Angle (°)[b]	Measurement range, m (ft)
		1-1/2" threaded connection	2" threaded connection	3" threaded connection		
1.5"	39.8 (1.57)	135 (5.3)	N/A	N/A	19	10 (32.8)
2"	47.8 (1.88)	N/A	166 (6.55)	180 (7.09)	15	20 (65.6)
3"	74.8 (2.94)	N/A	199 (7.85)	213 (8.39)	10	20 (65.6)
4"	94.8 (3.73)	N/A	254 (10)	268 (10.55)	8	20 (65.6)

[a)] Height from bottom of horn to sensor reference point as shown: see dimension drawing.

[b)] -3dB in the direction of the polarization axis. For an illustration, see Polarization reference point (Page 29).

12.6 Stainless steel threaded horn antenna with extension

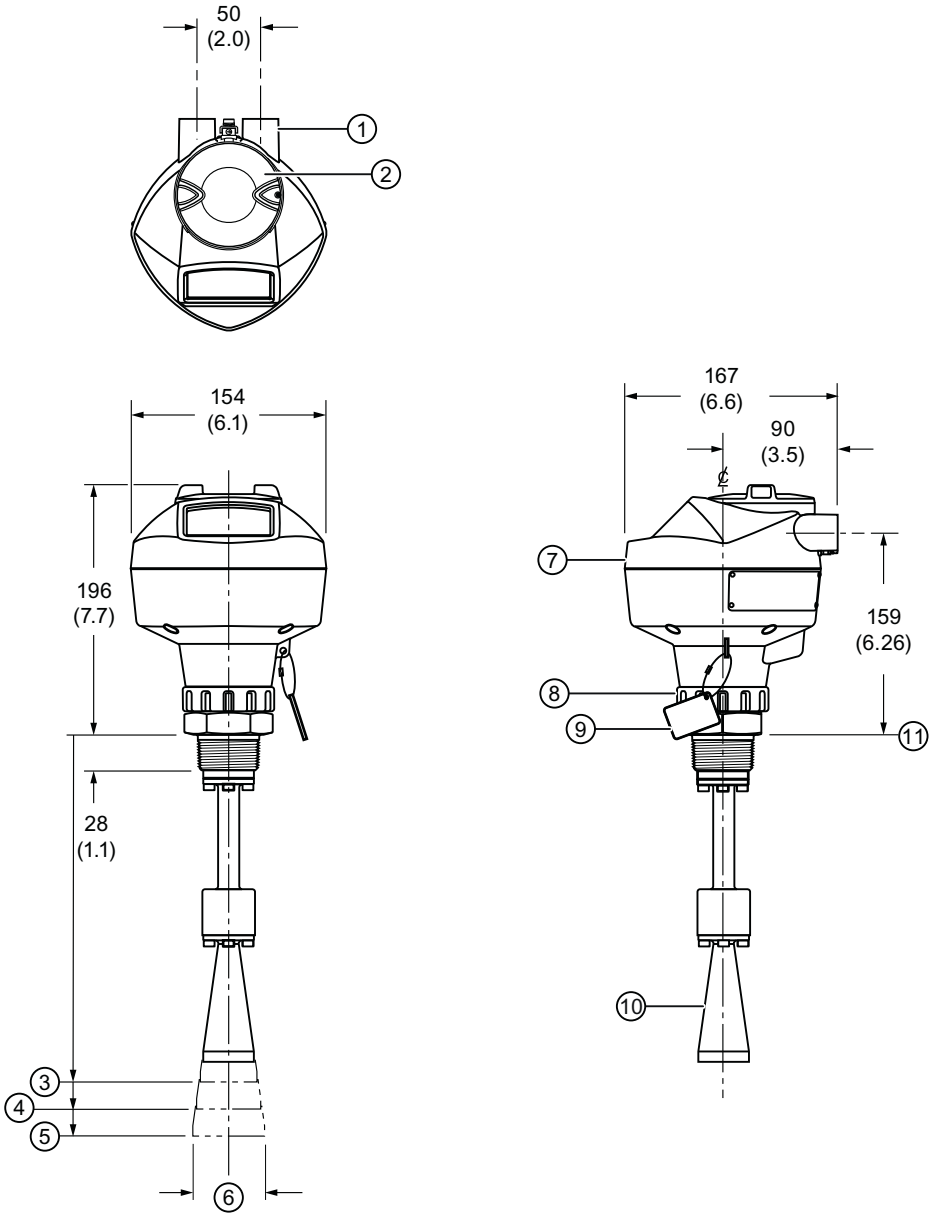

①	½" NPT cable entry, or M20 cable gland	⑦	enclosure/electronics
②	threaded cover	⑧	retaining collar
③	2" horn	⑨	process connection tag
④	3" horn	⑩	horn
⑤	4" horn	⑪	sensor reference point
⑥	horn O.D.		

Dimensions in mm (inch)

Threaded horn with extension dimensions

Antenna Type	Antenna O.D., mm (inch)	Height to sensor reference point, mm (inch) [a]			Beam Angle (°) [b]	Measurement range, m (ft)
		1-1/2" threaded connection	2" threaded connection	3" threaded connection		
1.5"	39.8 (1.57)	235 (9.25)	N/A	N/A	19	10 (32.8)
2"	47.8 (1.88)	N/A	266 (10.47)	280 (11.02)	15	20 (65.6)
3"	74.8 (2.94)	N/A	299 (11.77)	313 (12.32)	10	20 (65.6)
4"	94.8 (3.73)	N/A	354 (13.94)	368 (14.49)	8	20 (65.6)

[a] Height from bottom of horn to sensor reference point as shown: see dimension drawing.

[b] -3dB in the direction of the polarization axis. For an illustration, see Polarization reference point (Page 29).

12.7 Stainless steel flanged horn antenna

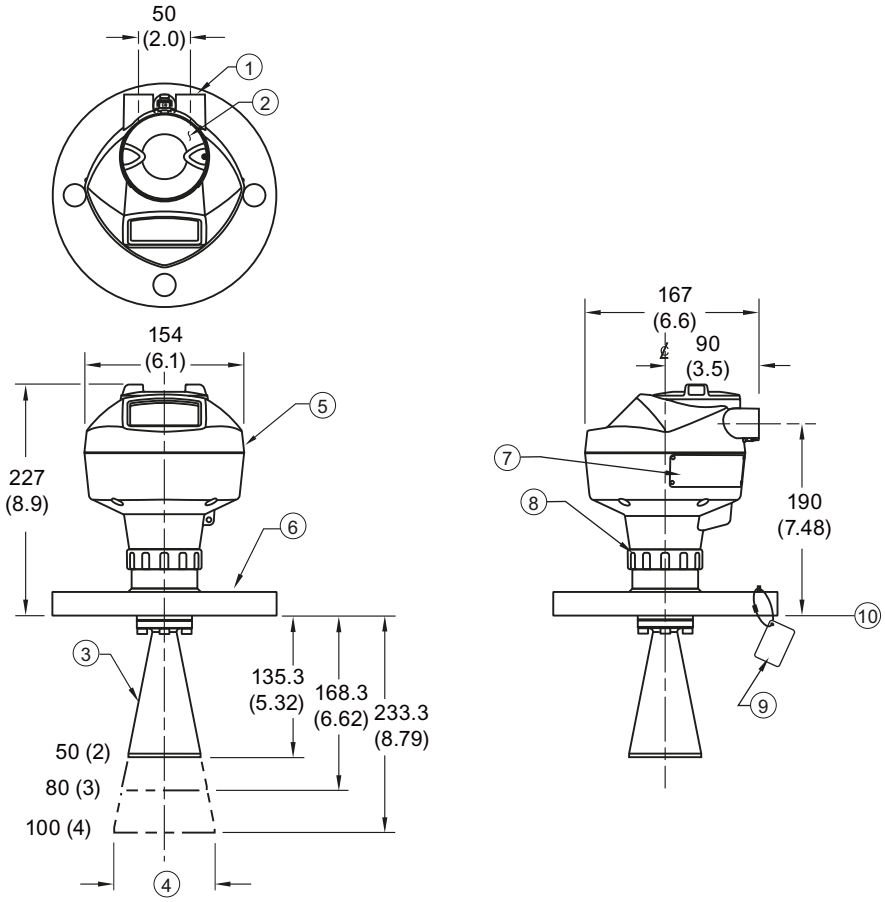

①	½" NPT cable entry, or M20 cable gland	⑥	flange
②	threaded cover	⑦	name-plate
③	horn	⑧	retaining collar
④	horn O.D.	⑨	process connection tag
⑤	enclosure/electronics	⑩	sensor reference point

Dimensions in mm (inch)

Flanged Horn dimensions

Nominal horn size, mm (inch)	Horn O.D., mm (inch)	Height to sensor reference point, mm (inch)[a]		Beam angle (°)[b]	Measurement range, m (ft)
		Stainless steel flange: raised or flat-face	Optional alloy flange [c]		
50 (2)	47.8 (1.88)	135.3 (5.32)	138.3 (5.44)	15	20 (65.6)
80 (3)	74.8 (2.94)	168.3 (6.62)	171.3 (6. 74)	10	
100 (4)	94.8 (3.73)	223.3 (8.79)	226.3 (8.90)	8	

[a]Height from bottom of horn to sensor reference point as shown: see Stainless steel flanged horn antenna with extension (Page 188). See also Raised-Face flange (Page 213), or Flat-Face flange (Page 217).

[b)] -3dB in the direction of the polarization axis (see Polarization reference point (Page 29) for an illustration).

[c)] Optional alloy N06022/2.4602 (Hastelloy® C-22 or equivalent). See Raised-Face Flange Dimensions (Page 213).

Note

Heights to sensor reference point are for stainless steel flanges. For optional alloy N06022/2.4602 (Hastelloy© C-22 or equivalent) see Flanged Horn dimensions above.

12.8 Stainless steel flanged horn antenna with extension

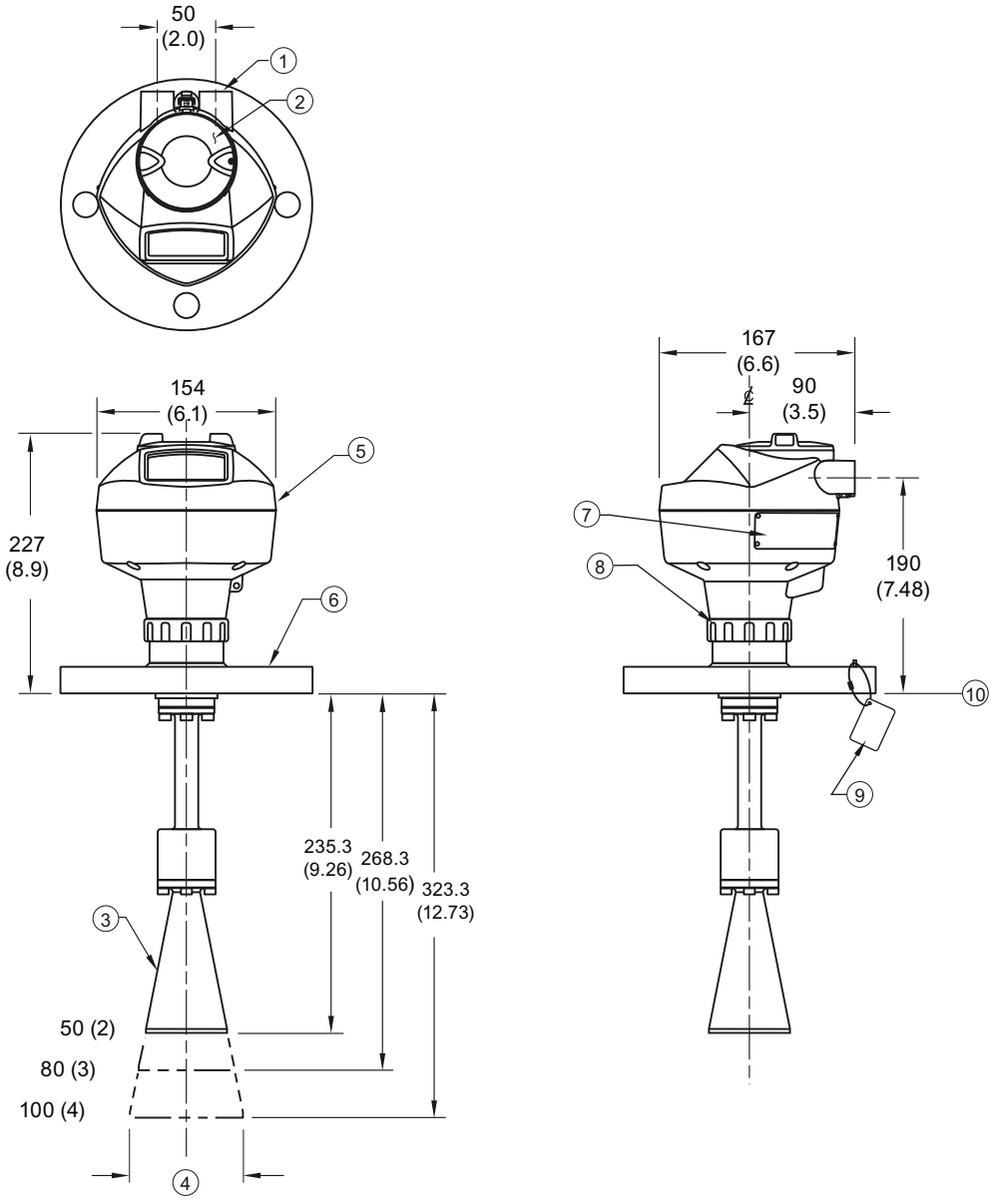

①	½" NPT cable entry, or M20 cable gland	⑥	flange
②	threaded cover	⑦	name-plate
③	horn	⑧	retaining collar
④	horn O.D.	⑨	process connection tag
⑤	enclosure/electronics	⑩	sensor reference point

Dimensions in mm (inch)

Flanged horn with extension dimensions

Nominal horn size, mm (inch)	Horn O.D., mm (inch)	Height to sensor reference point, mm (inch) [a]		Beam angle (°)[b]	Measurement range, m (ft)
		Stainless steel flange: raised or flat-face	Optional alloy flange [c]		
50 (2)	47.8 (1.88)	235.3 (9.26)	238.3 (9.38)	15	20 (65.6)
80 (3)	74.8 (2.94)	268.3 (10.56)	271.3 (10.68)	10	
100 (4)	94.8 (3.73)	323.3 (12.73)	326.3 (12.85)	8	

[a] Height from bottom of horn to sensor reference point as shown: See also Raised-Face flange (Page 213) or Flat-Face Flange. (Page 217)

[b] -3dB in the direction of the polarization axis (see Polarization reference point (Page 29) for an illustration).

[c] Optional alloy N06022/2.4602 (Hastelloy® C-22 or equivalent). See Raised-Face flange (Page 213).

Note

Heights to sensor reference point are for stainless steel flanges. For optional alloy N06022/2.4602 (Hastelloy© C-22 or equivalent) see Flanged Horn dimensions above.

12.9 PTFE Flanged encapsulated antenna (2"/DN50/50A sizes only)

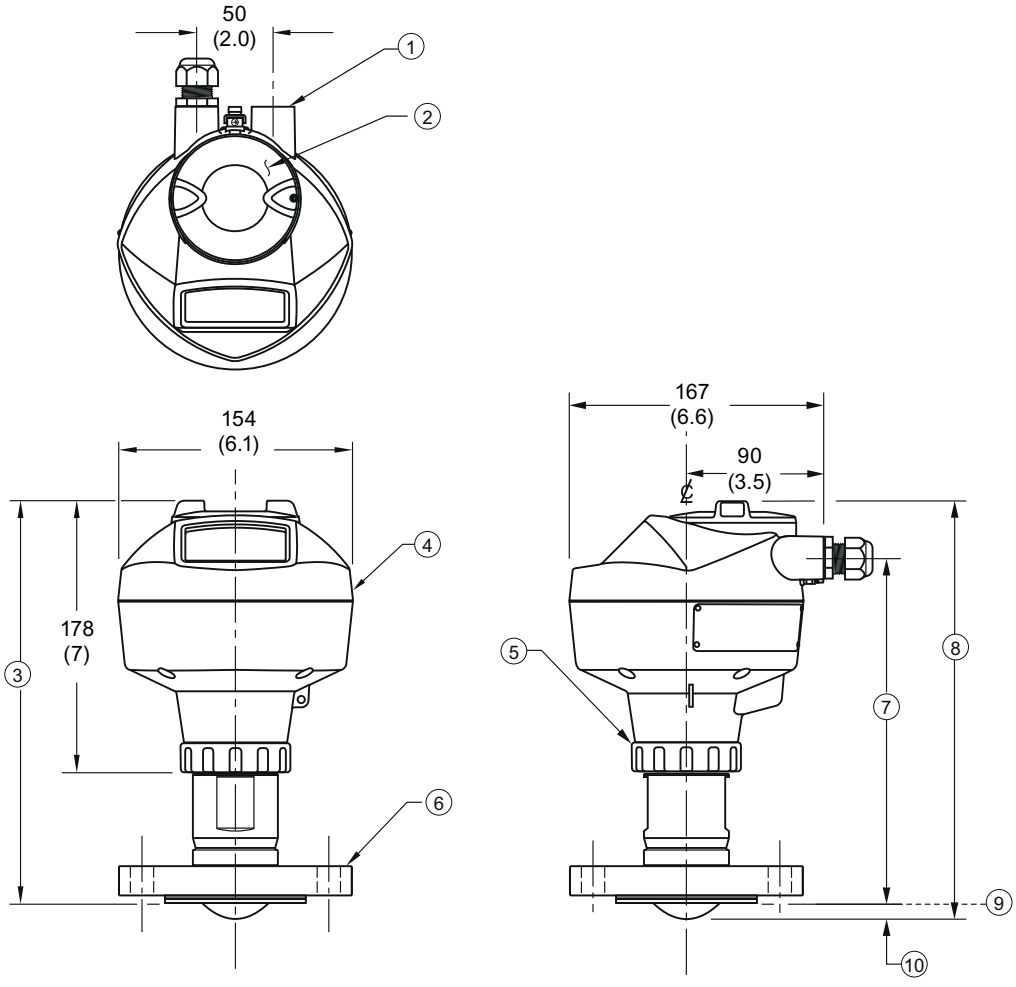

①	½" NPT cable entry, or M20 cable gland	⑥	flange
②	threaded cover	⑦	see table below
③	see table below	⑧	see table below
④	enclosure	⑨	sensor reference point
⑤	retaining collar	⑩	see table below

Dimensions in mm (inch)

Flanged encapsulated antenna (2"/DN50/50A) dimensions

Flange size	③ mm (inch)	⑦ mm (inch)	⑧ mm (inch)	⑩ mm (inch)[1]
2"/DN50/50A	263 (10.35)	223 (8.78)	274 (10.79)	11 (0.43)

[1] Height from tip of lens to sensor reference point as shown.

Flange size	Flange class	Flange O.D. [mm (inch)]	Antenna aperture size [mm (inch)]	Beam angle (°)[1]	Measurement range [m (ft)]
2"	150 LB	152 (5.98)	50 (1.97)	12.8	10 (32.8)[2]
DN50	PN10/16	165 (6.50)			
50A	10K	155 (6.10)			

[1] -3 dB in the direction of the polarization axis.

[2] 20m if installed in stillpipe

See Raised-Face Flange per EN 1092-1, (Page 215)and Polarization reference point (Page 29).

12.10 PTFE Flanged encapsulated antenna (3"/DN80/80A sizes and larger)

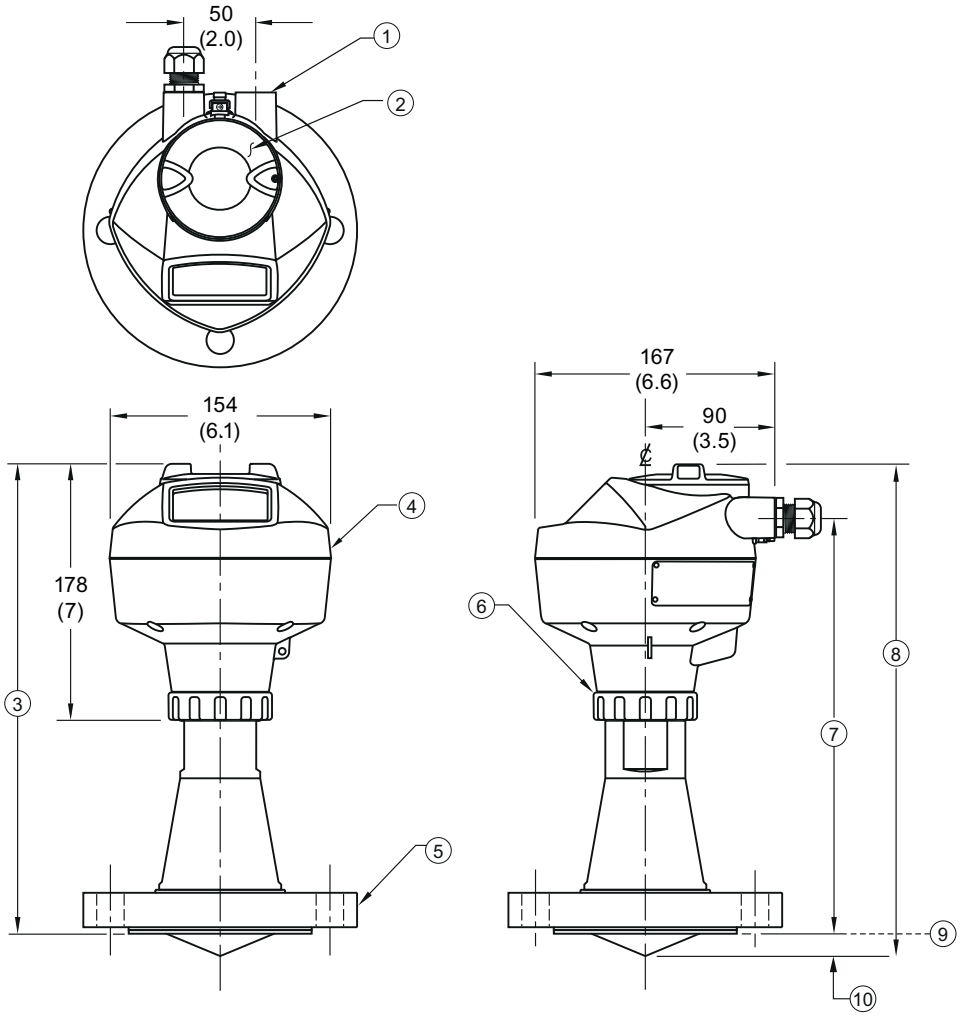

①	½" NPT cable entry, or M20 cable gland	⑥	retaining collar
②	threaded cover	⑦	see table below
③	see table below	⑧	see table below
④	enclosure	⑨	sensor reference point
⑤	flange	⑩	see table below

Dimensions in mm (inch)

Flanged encapsulated antenna (3"/DN80/80A and larger) dimensions

Flange size	③ mm (inch)	⑦ mm (inch)	⑧ mm (inch)	⑩ mm (inch)[1]
3"/DN80/80A	328 (12.91)	288 (11.34)	343 (13.50)	15 (0.59)
4"/DN100/100A	328 (12.91)	288 (11.34)	343 (13.50)	13 (0.51)
6"/DN150/150A	333 (13.11)	293 (11.54)	348 (13.70)	15 (0.59)

[1] Height from tip of lens to sensor reference point as shown. See also Raised-Face Flange per EN 1092-1.

Flange size	Flange class	Flange O.D. [mm (inch)]	Antenna aperture size [mm (inch)]	Beam angle (°)[1]	Measurement range [m (ft)]
3"	150 LB	190 (7.48)	75 (2.95)	9.6	20 (65.6)
DN80	PN10/16	200 (7.87)			
80A	10K	185 (7.28)			
4"	150 LB	230 (9.06)	75 (2.95)	9.6	20 (65.6)
DN100	PN10/16	220 (8.66)			
100A	10K	210 (8.27)			
6"	150 LB	280 (11.02)	75 (2.95)	9.6	20 (65.6)
DN150	PN10/16	285 (11.22)			
150A	10K	280 (11.02)			

[1] -3 dB in the direction of the polarization axis.

See Raised-Face Flange per EN 1092-1 (Page 215), and Polarization reference point (Page 29).

12.11 Hygienic encapsulated antenna (2" ISO 2852 sanitary clamp)

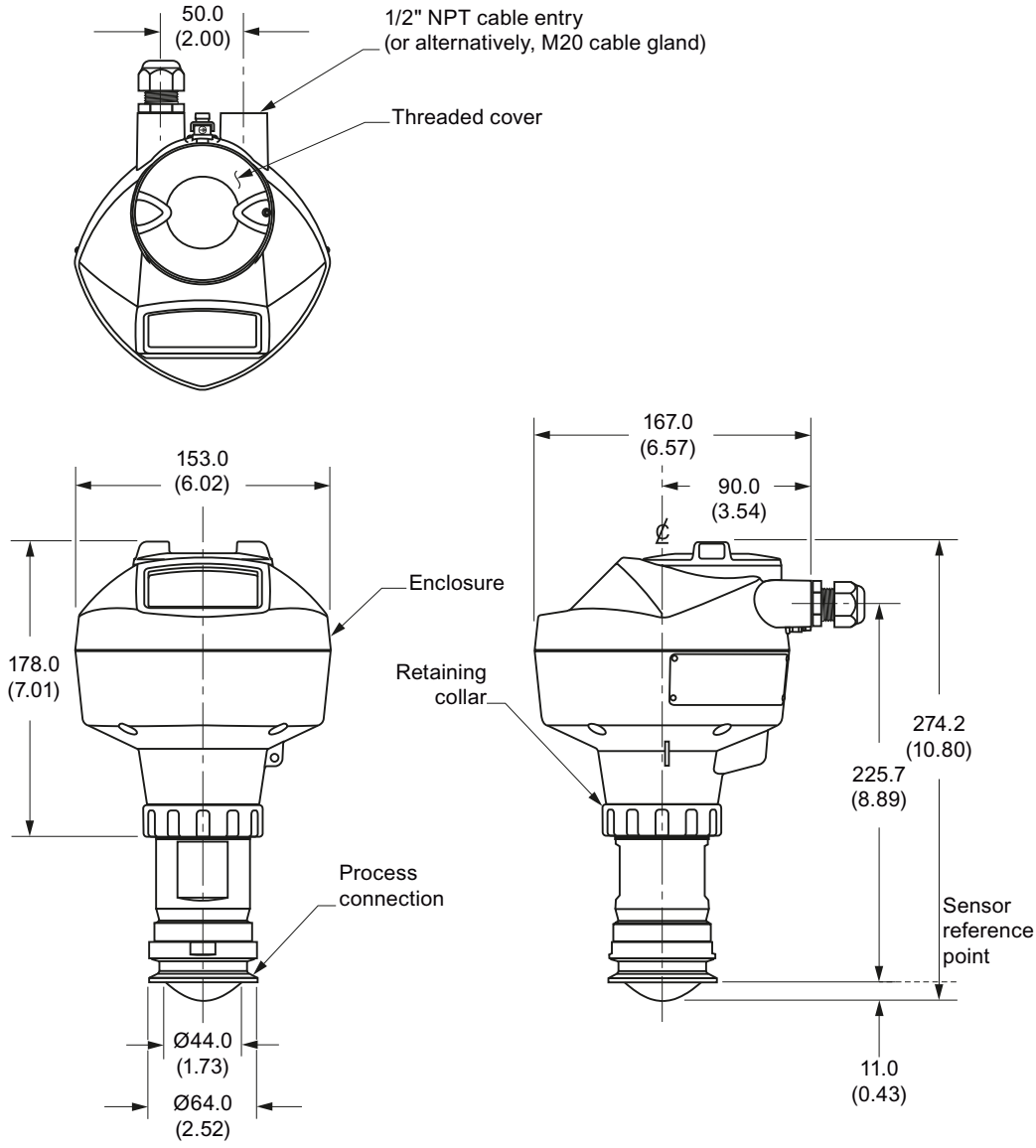

Dimensions in mm (inch)

12.12 Hygienic encapsulated antenna (3" ISO 2852 sanitary clamp)

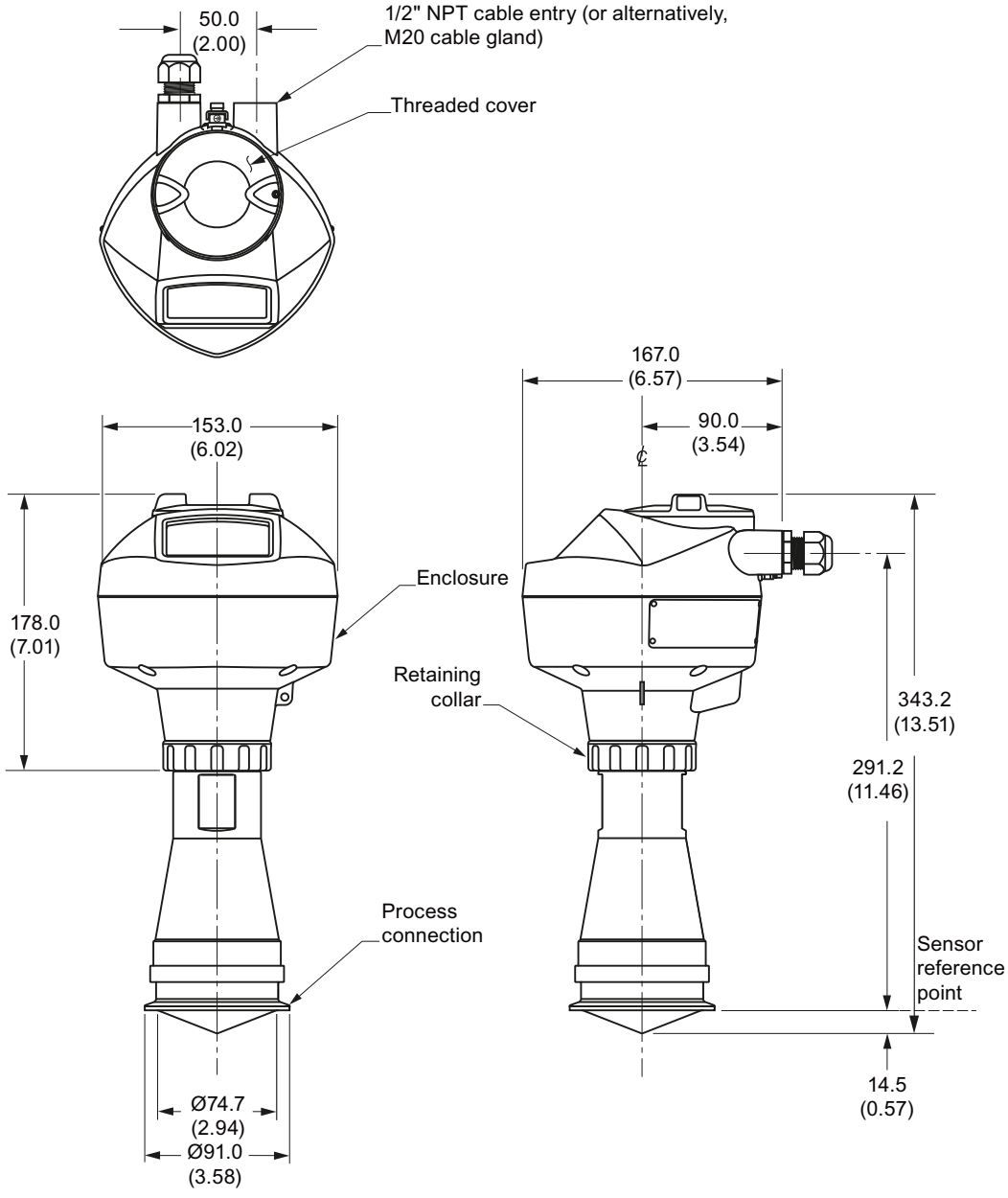

Dimensions in mm (inch)

12.13 Hygienic encapsulated antenna (4" ISO 2852 sanitary clamp)

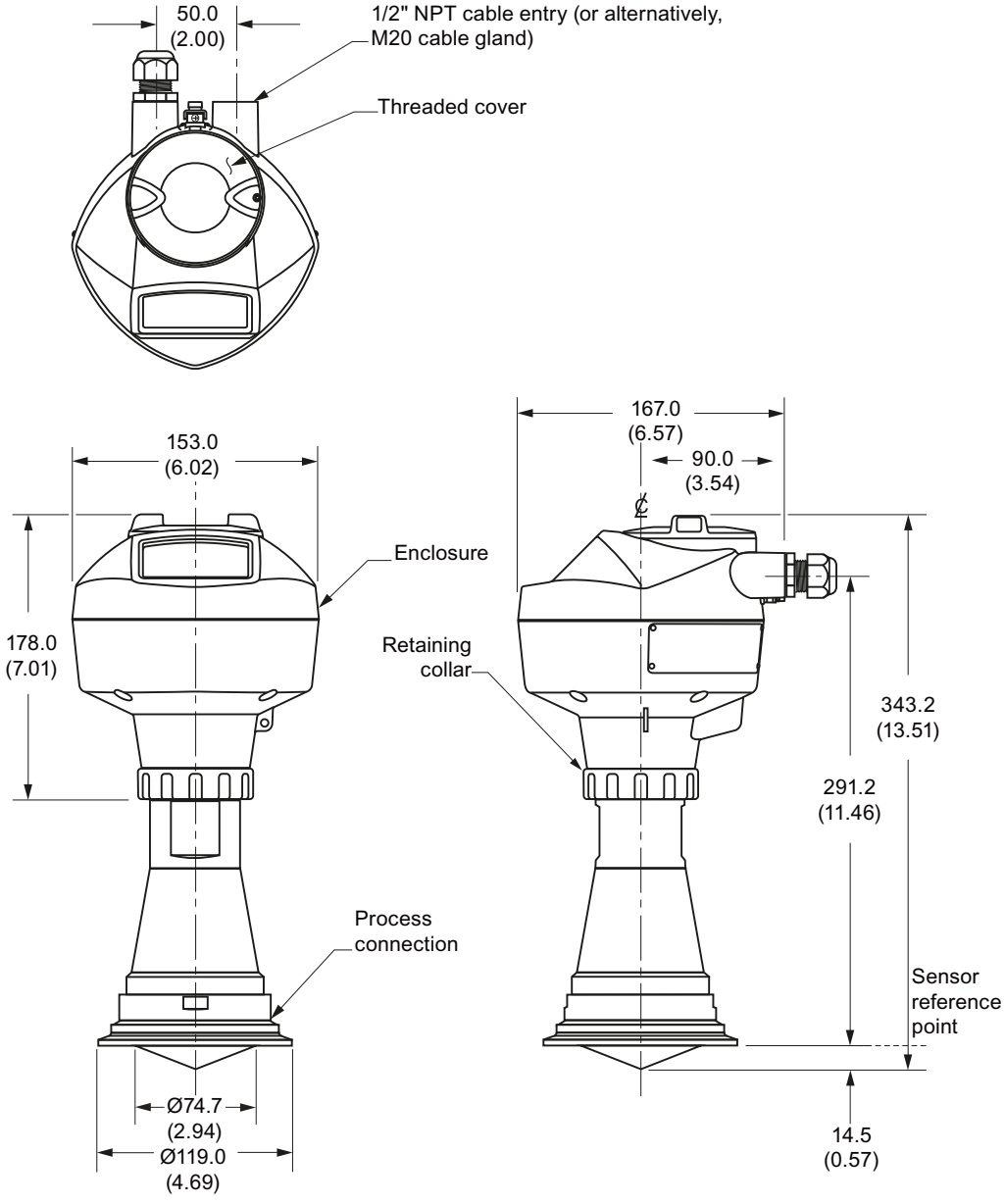

Dimensions in mm (inch)

12.14 Hygienic encapsulated antenna (DN50 nozzle/slotted nut to DIN 11851)

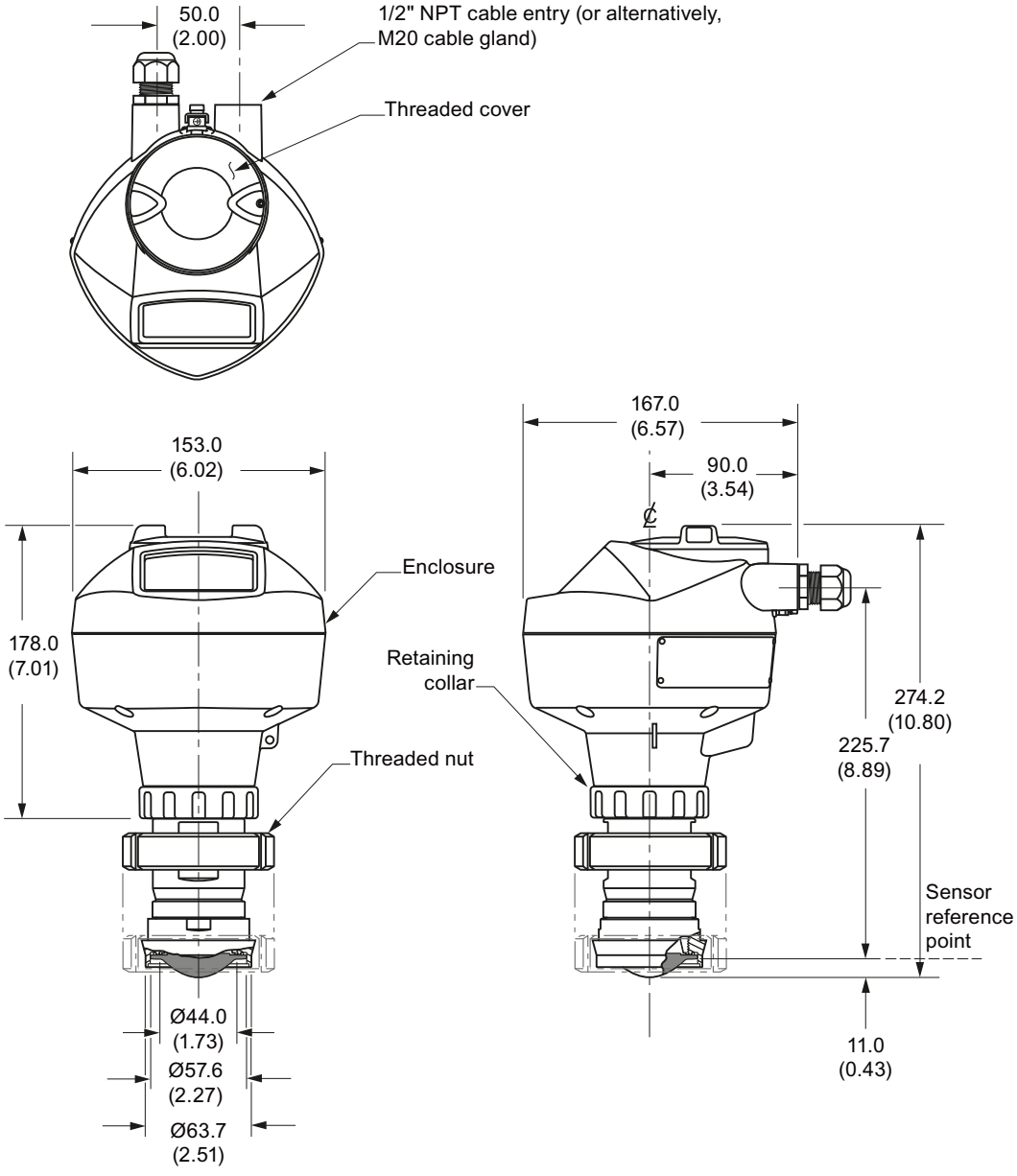

Dimensions in mm (inch)

Note

Cut out of process connection and placement of threaded nut are shown for illustration purposes only.

12.15 Hygienic encapsulated antenna (DN80 nozzle/slotted nut to DIN 11851)

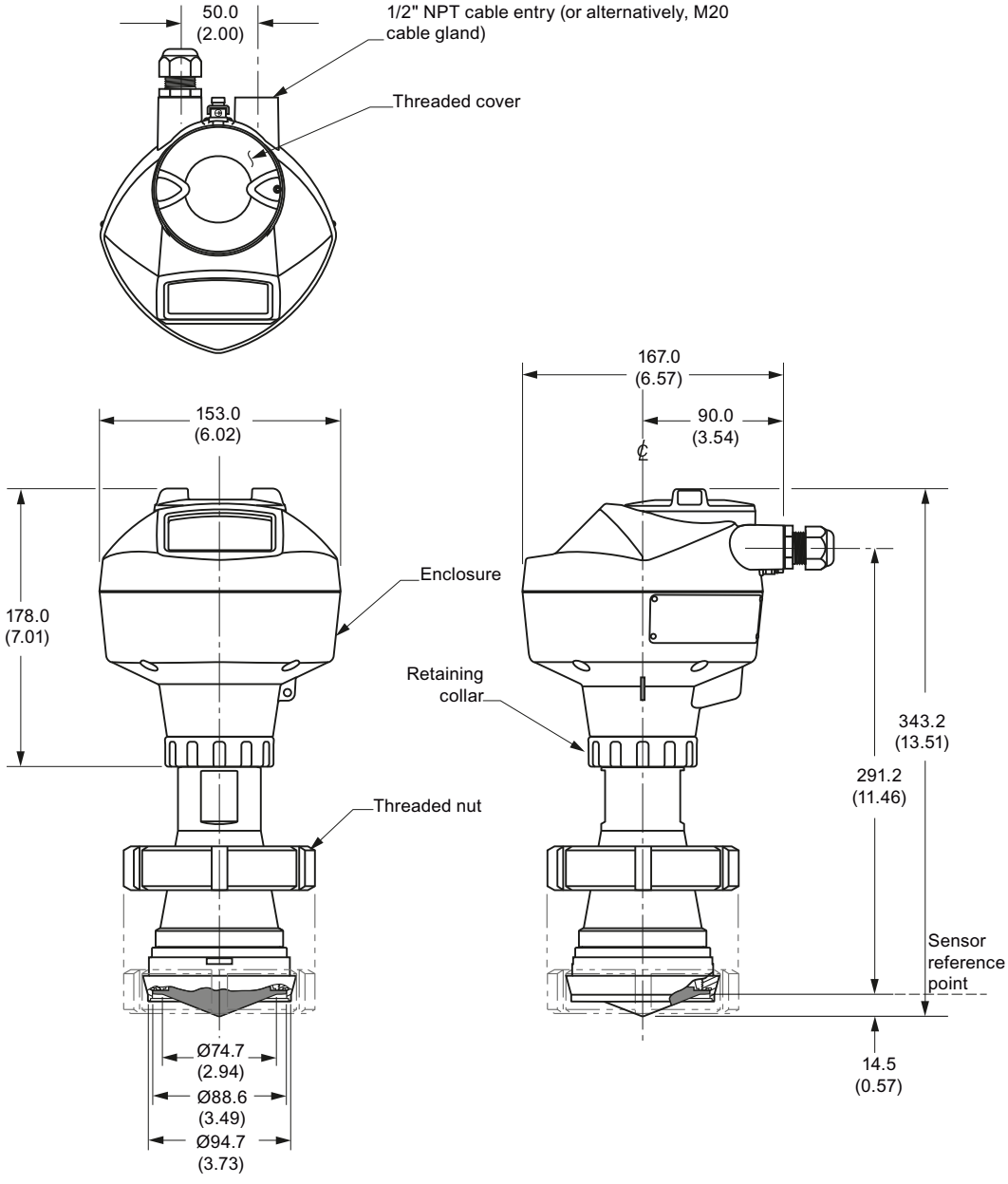

Dimensions in mm (inch)

Note

Cut out of process connection and placement of threaded nut are shown for illustration purposes only.

12.16 Hygienic encapsulated antenna (DN100 nozzle/slotted nut to DIN 11851)

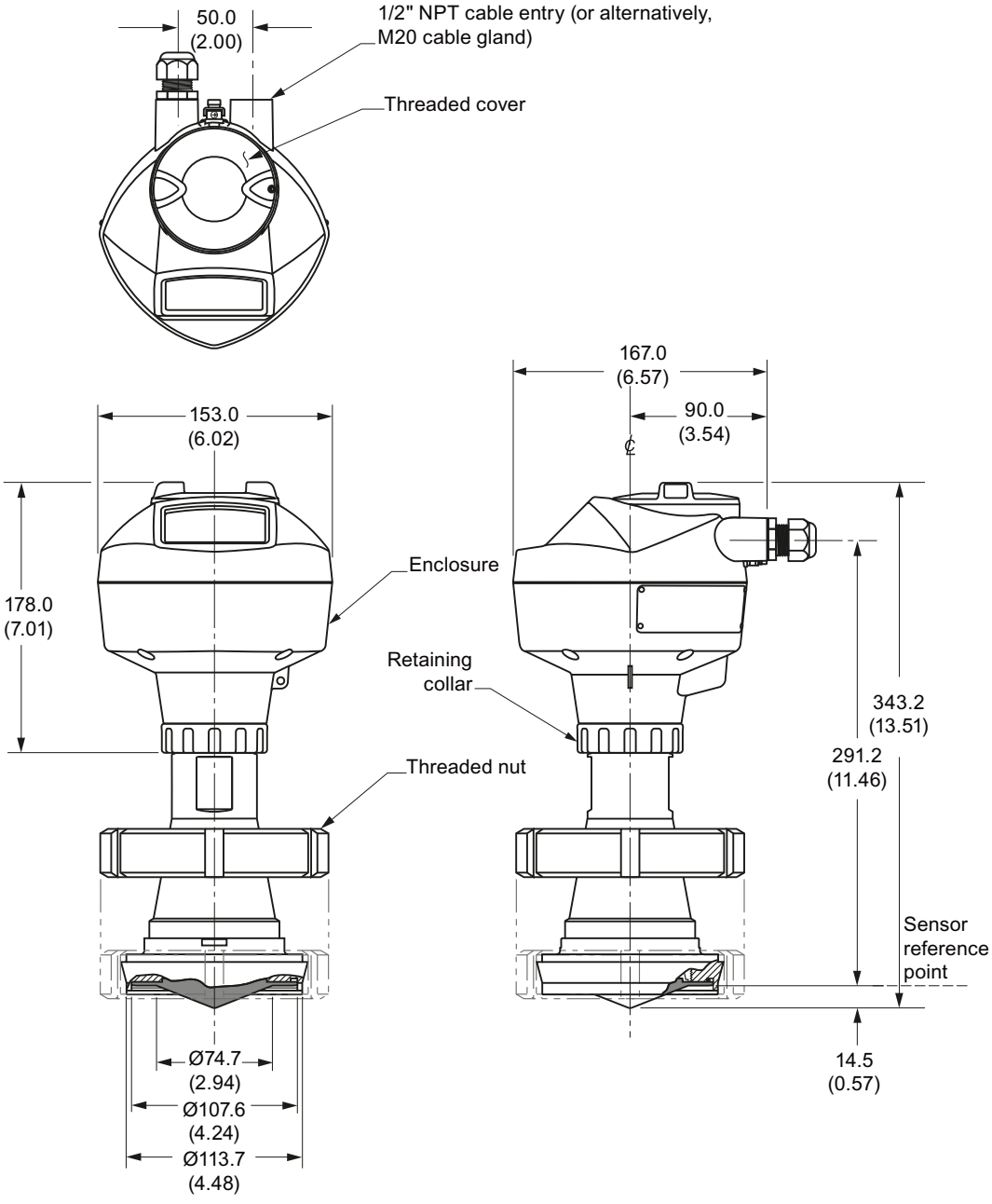

Dimensions in mm (inch)

Note

Cut out of process connection and placement of threaded nut are shown for illustration purposes only.

12.17 Hygienic encapsulated antenna (DN50 aseptic slotted nut to DIN 11864-1)

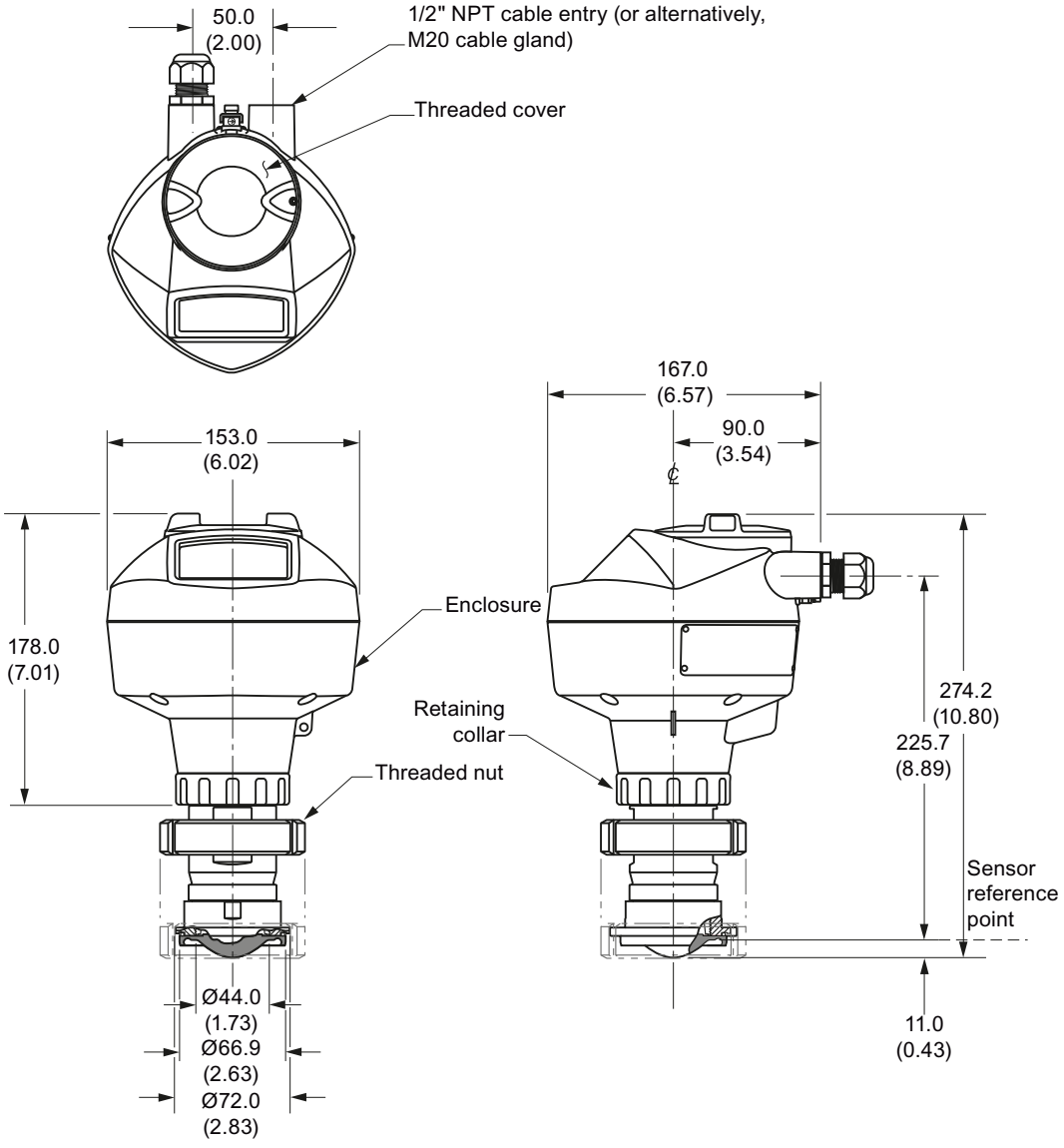

Dimensions in mm (inch)

Note

Cut out of process connection and placement of threaded nut are shown for illustration purposes only.

12.18 Hygienic encapsulated antenna (DN80 aseptic slotted nut to DIN 11864-1)

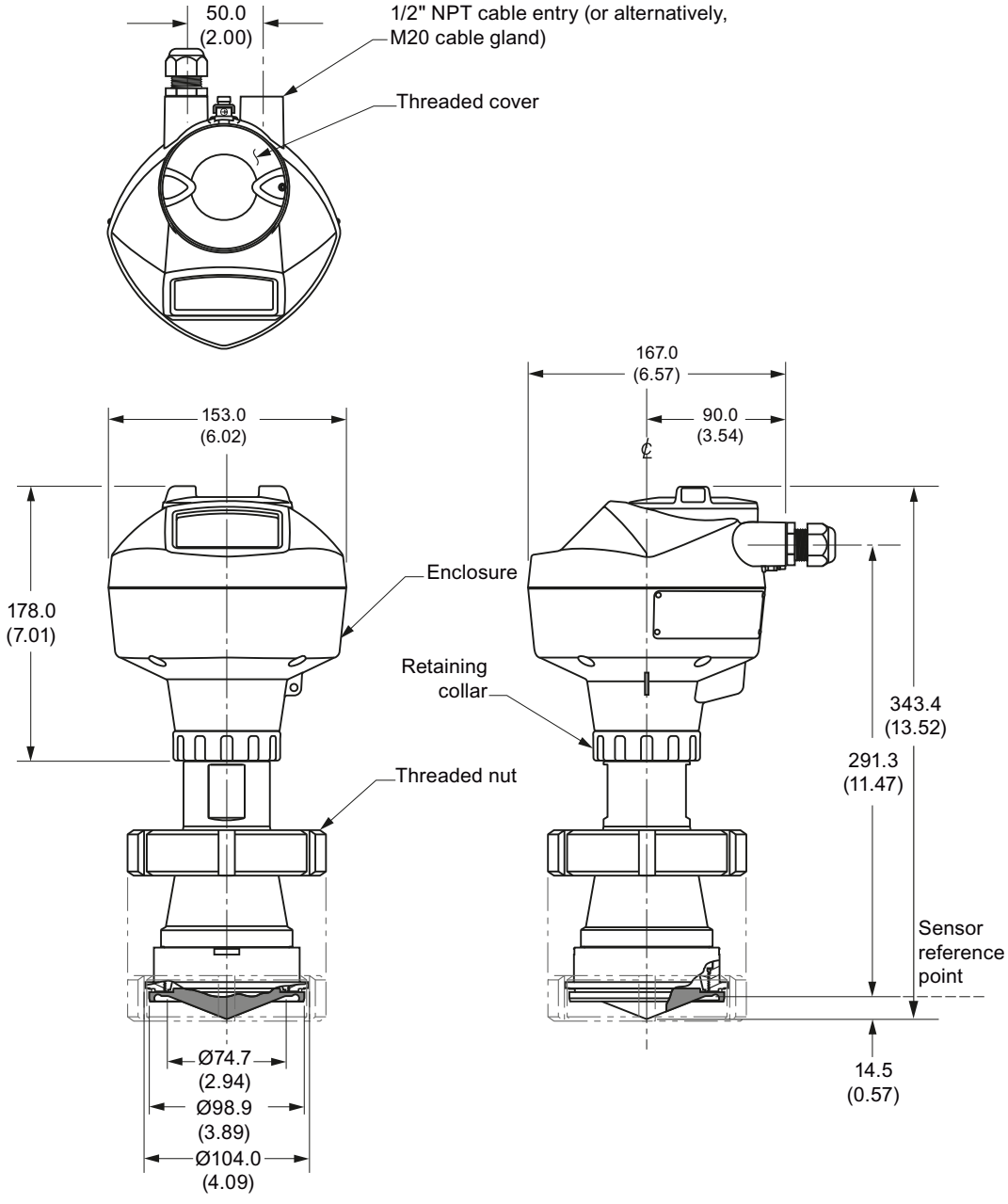

Dimensions in mm (inch)

Note

Cut out of process connection and placement of threaded nut are shown for illustration purposes only.

12.19 Hygienic encapsulated antenna (DN100 aseptic slotted nut to DIN 11864-1)

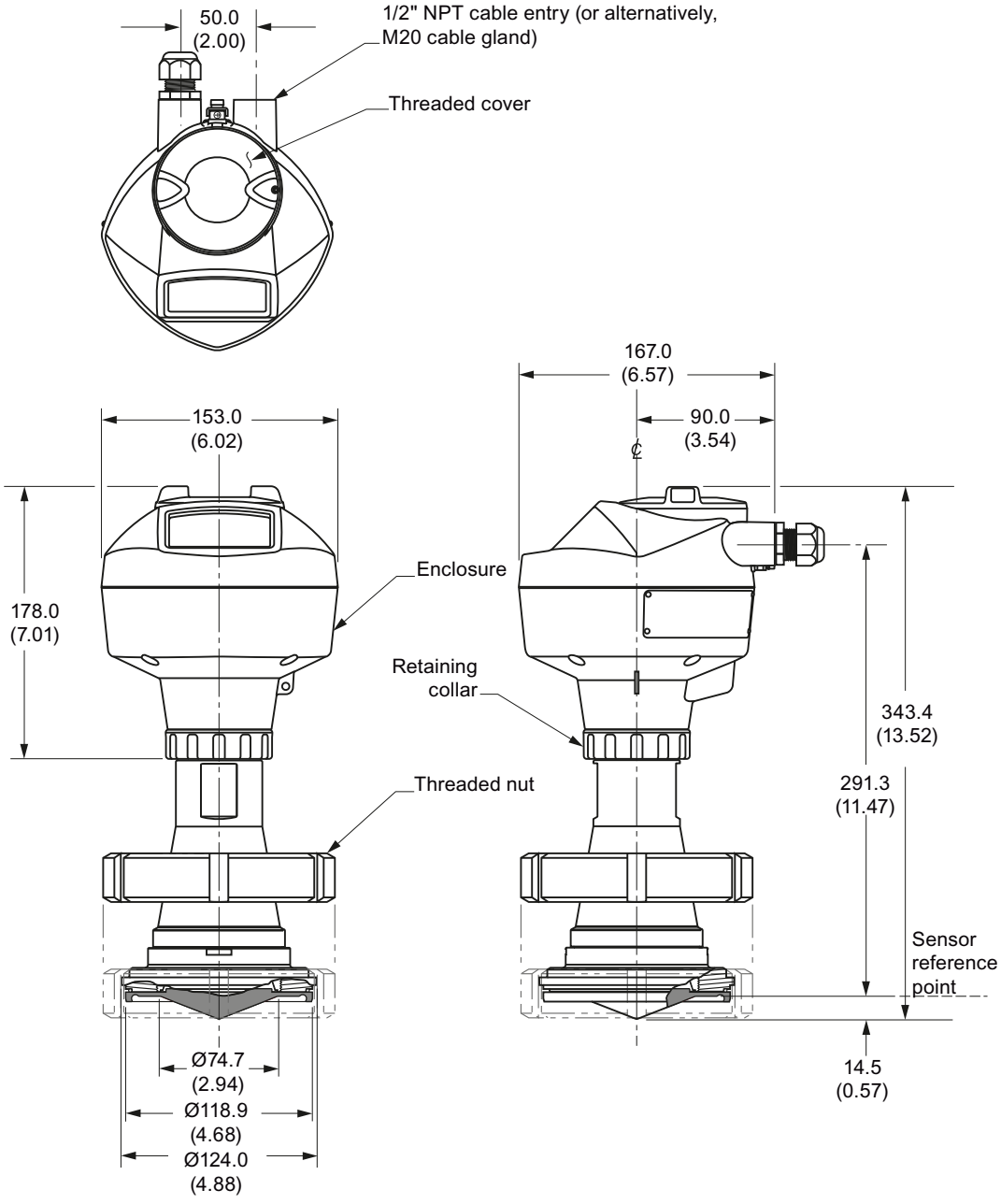

Dimensions in mm (inch)

Note

Cut out of process connection and placement of threaded nut are shown for illustration purposes only.

12.20 Hygienic encapsulated antenna (DN50 aseptic flange to DIN 11864-2)

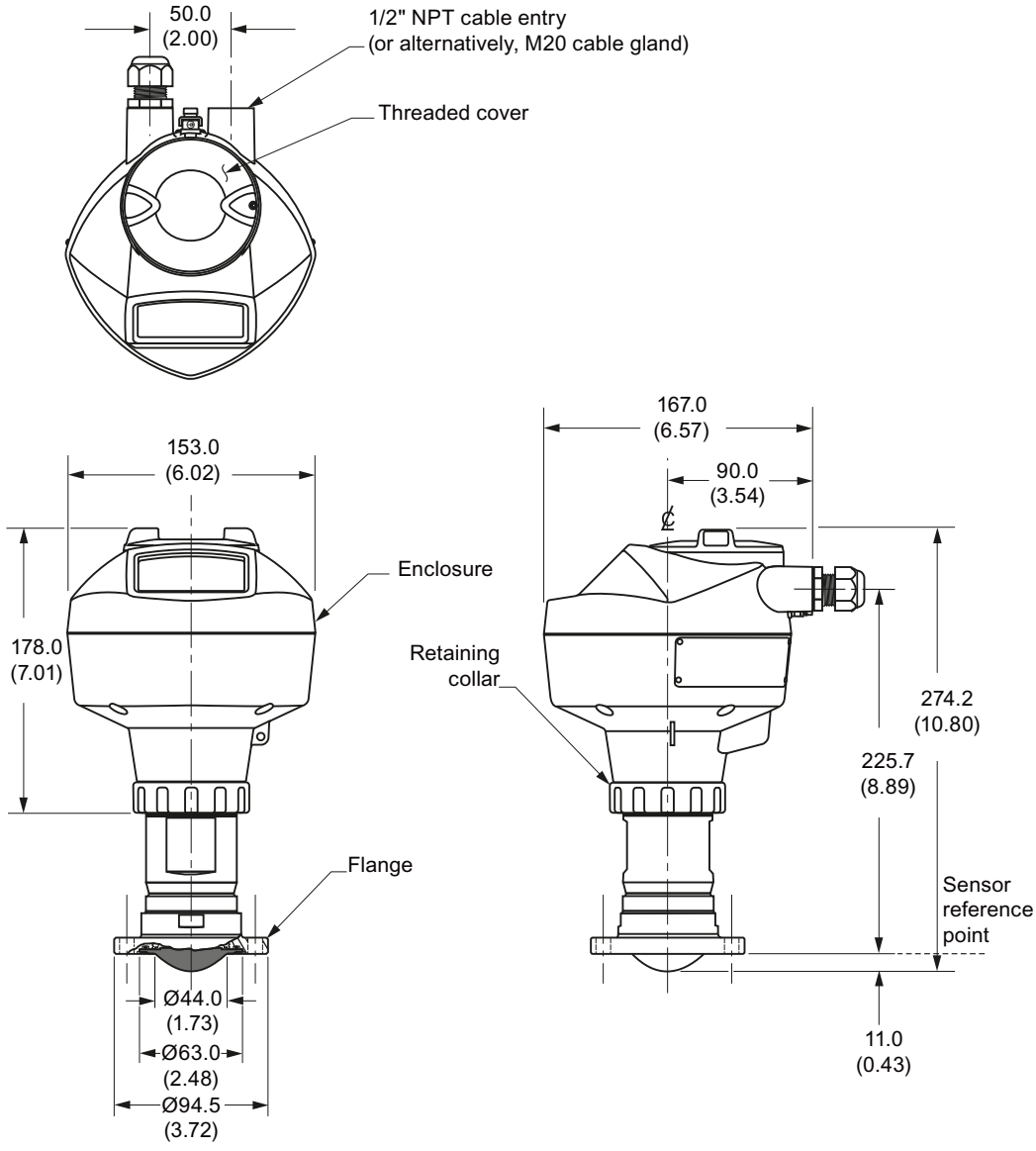

Dimensions in mm (inch)

Note

Cut out of process connection and flange are shown for illustration purposes only.

12.21 Hygienic encapsulated antenna (DN80 aseptic flange to DIN 11864-2)

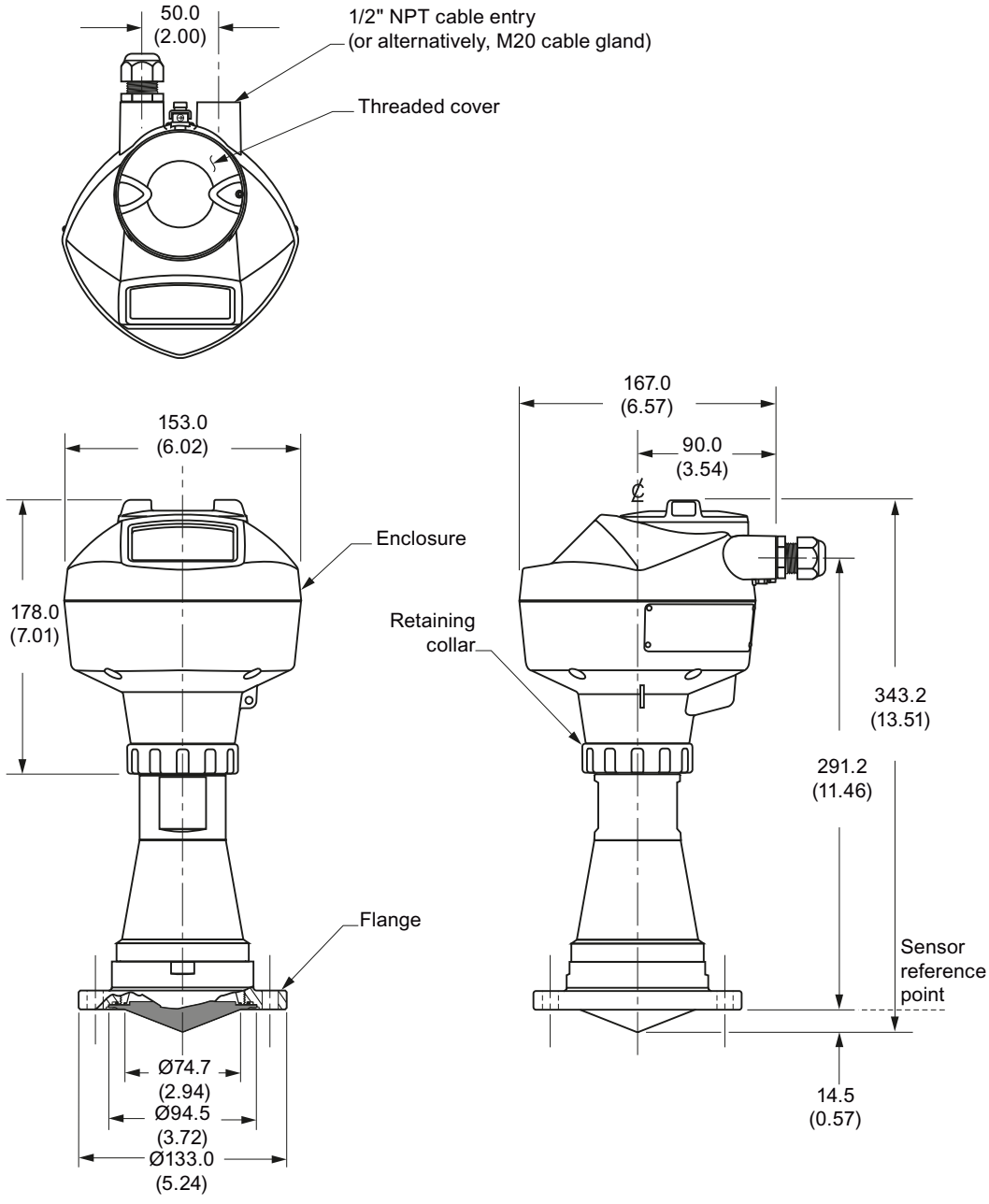

Dimensions in mm (inch)

Note

Cut out of process connection and flange are shown for illustration purposes only.

12.22 Hygienic encapsulated antenna (DN100 aseptic flange to DIN 11864-2)

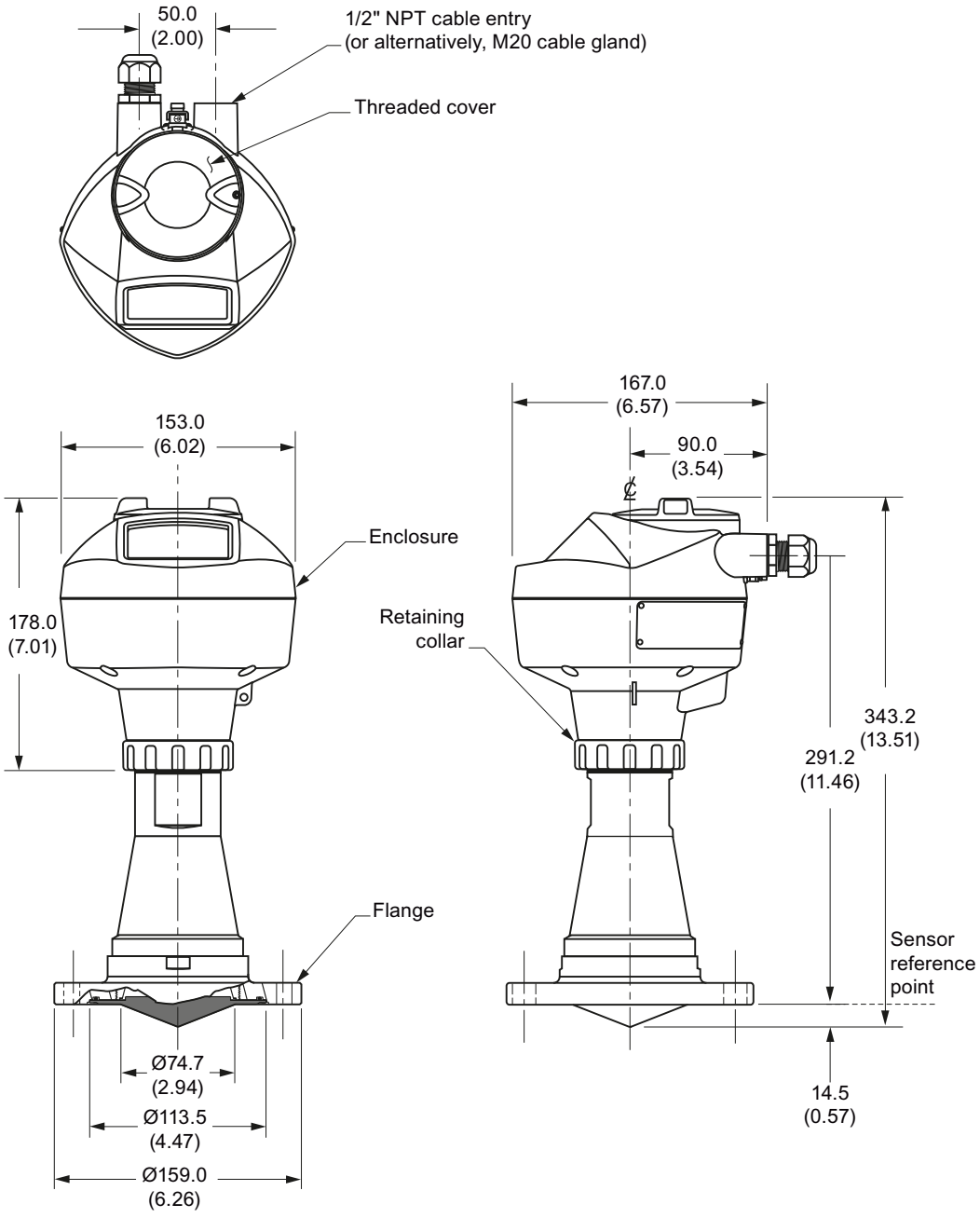

Dimensions in mm (inch)

Note

The cut out of the process connection and the flange are shown for illustration purposes only.

12.23 Hygienic encapsulated antenna (DN50 aseptic clamp to DIN 11864-3)

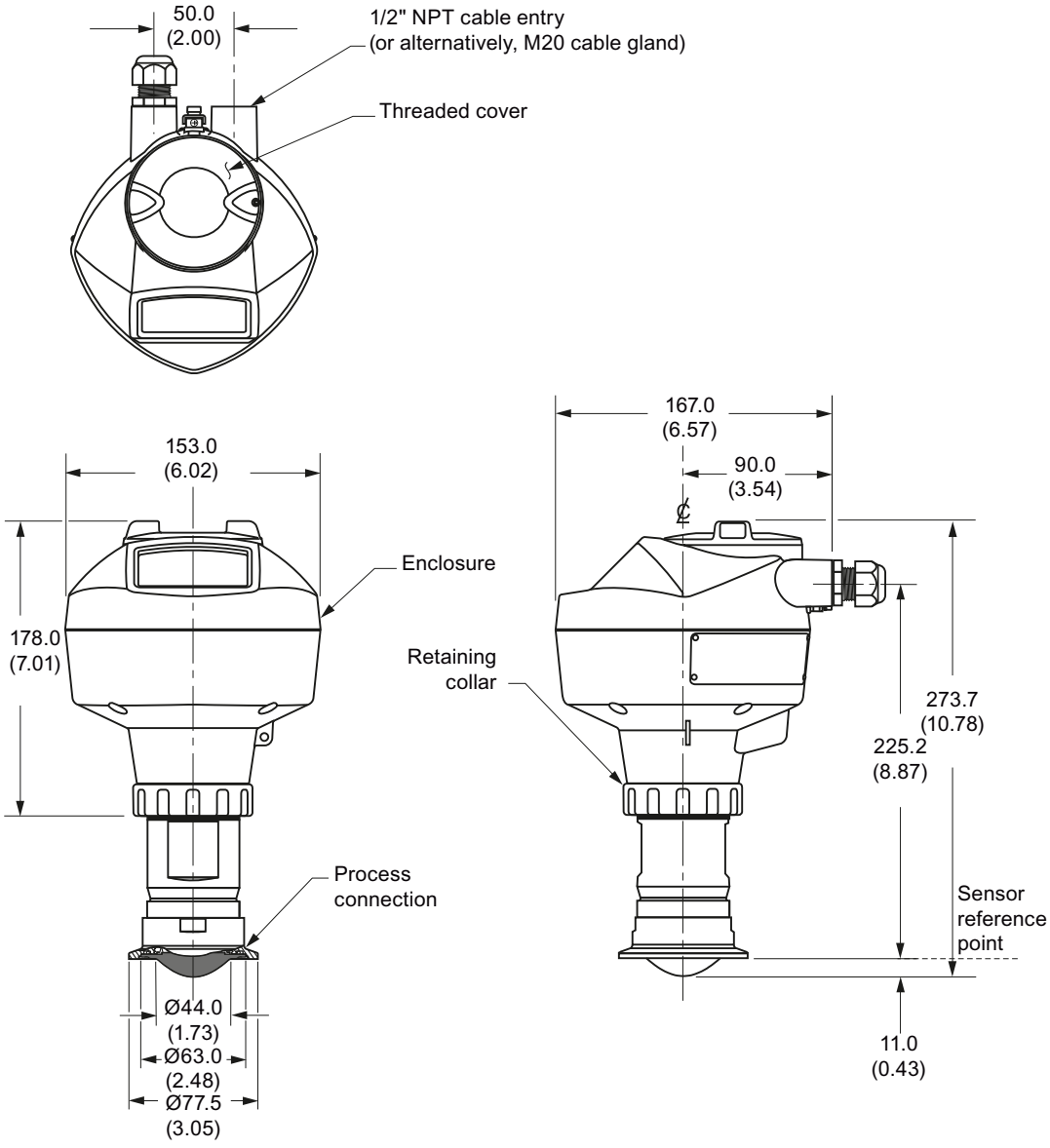

Dimensions in mm (inch)

Note

Cut out of process connection is shown for illustration purposes only.

12.24 Hygienic encapsulated antenna (DN80 aseptic clamp to DIN 11864-3)

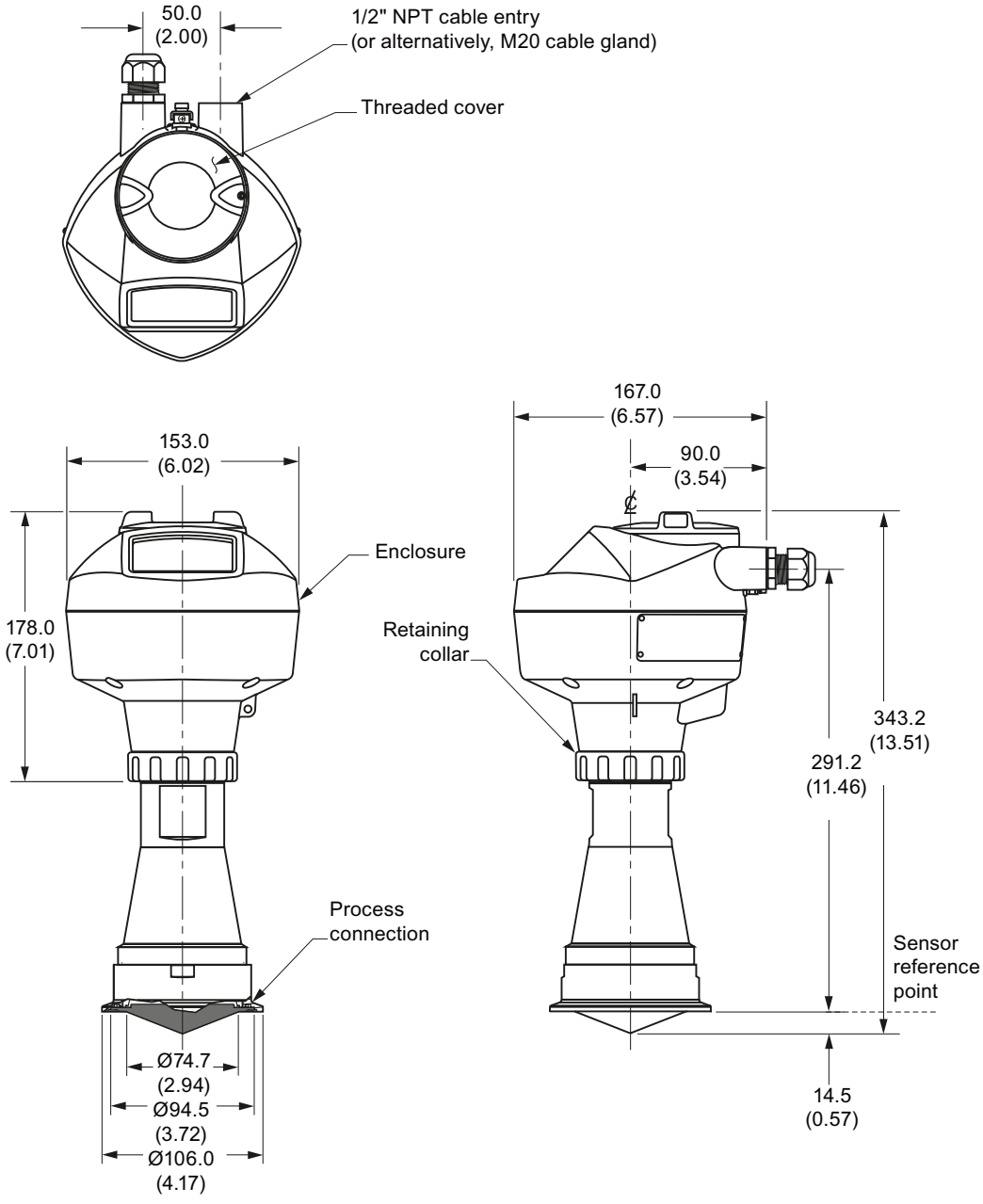

Dimensions in mm (inch)

Note

Cut out of process connection is shown for illustration purposes only.

12.25 Hygienic encapsulated antenna (DN100 aseptic clamp to DIN 11864-3)

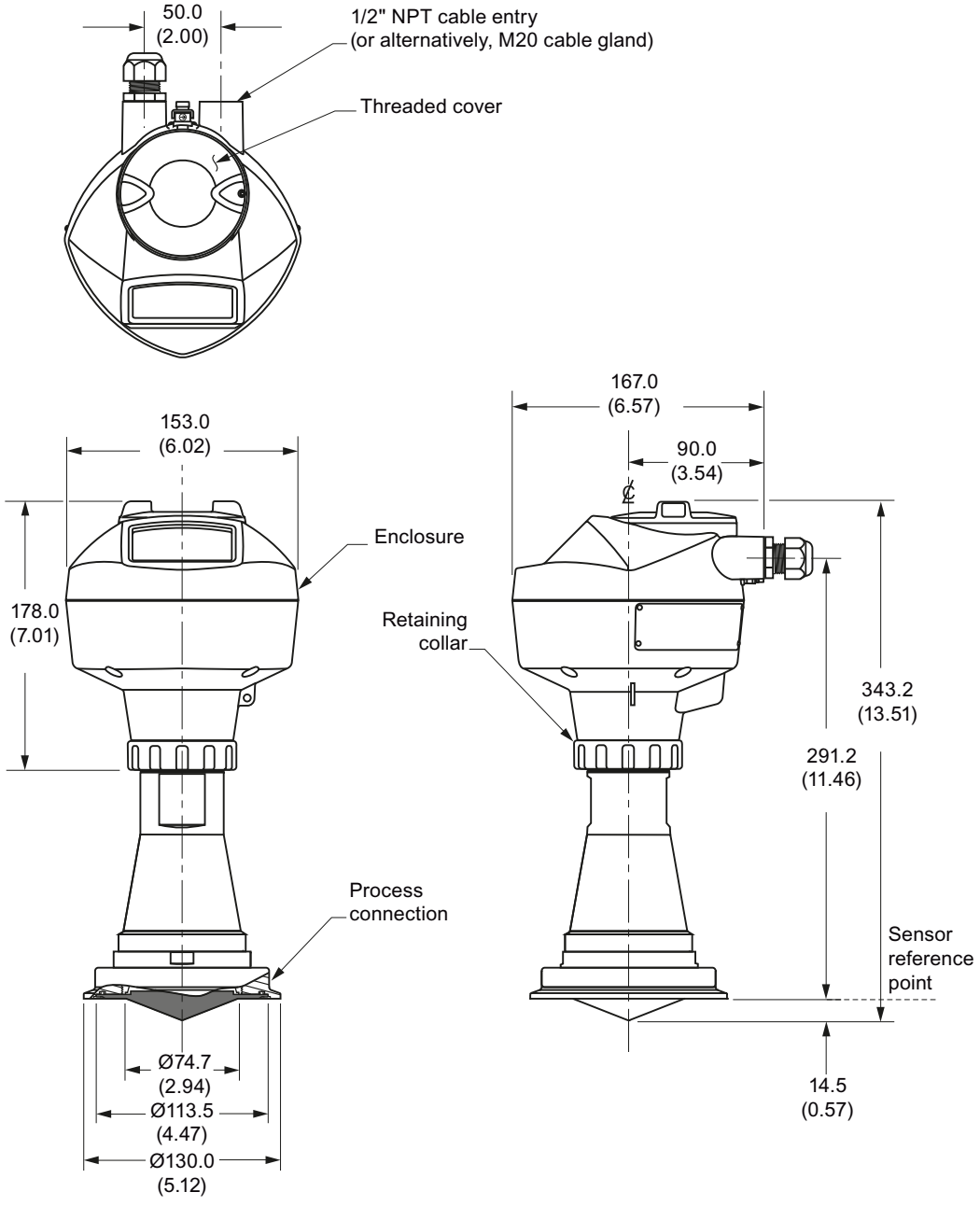

Dimensions in mm (inch)

Note

Cut out of process connection is shown for illustration purposes only.

12.26 Hygienic encapsulated antenna (Tuchenhagen Type N)

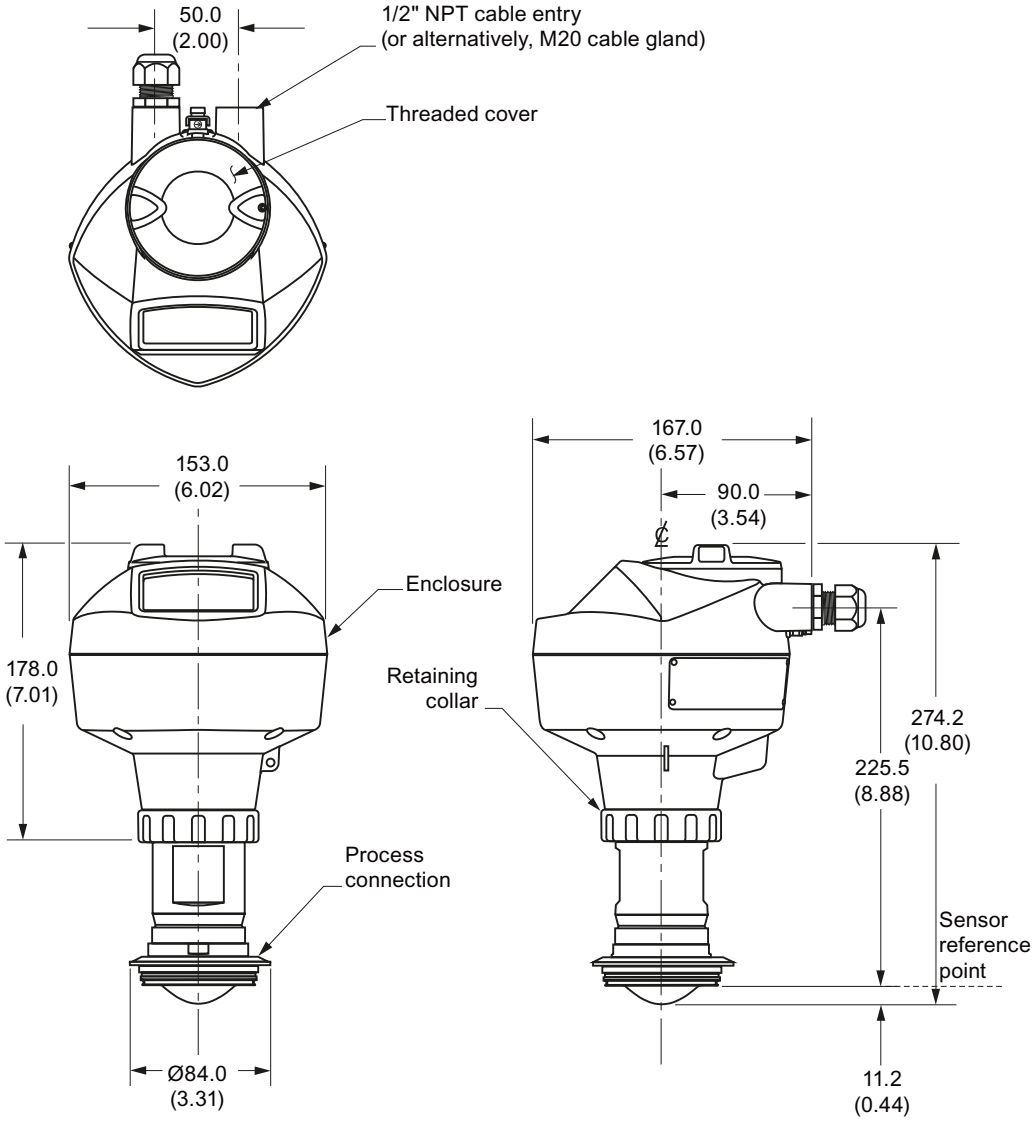

Dimensions in mm (inch)

12.27 Hygienic encapsulated antenna (Tuchenhagen Type F)

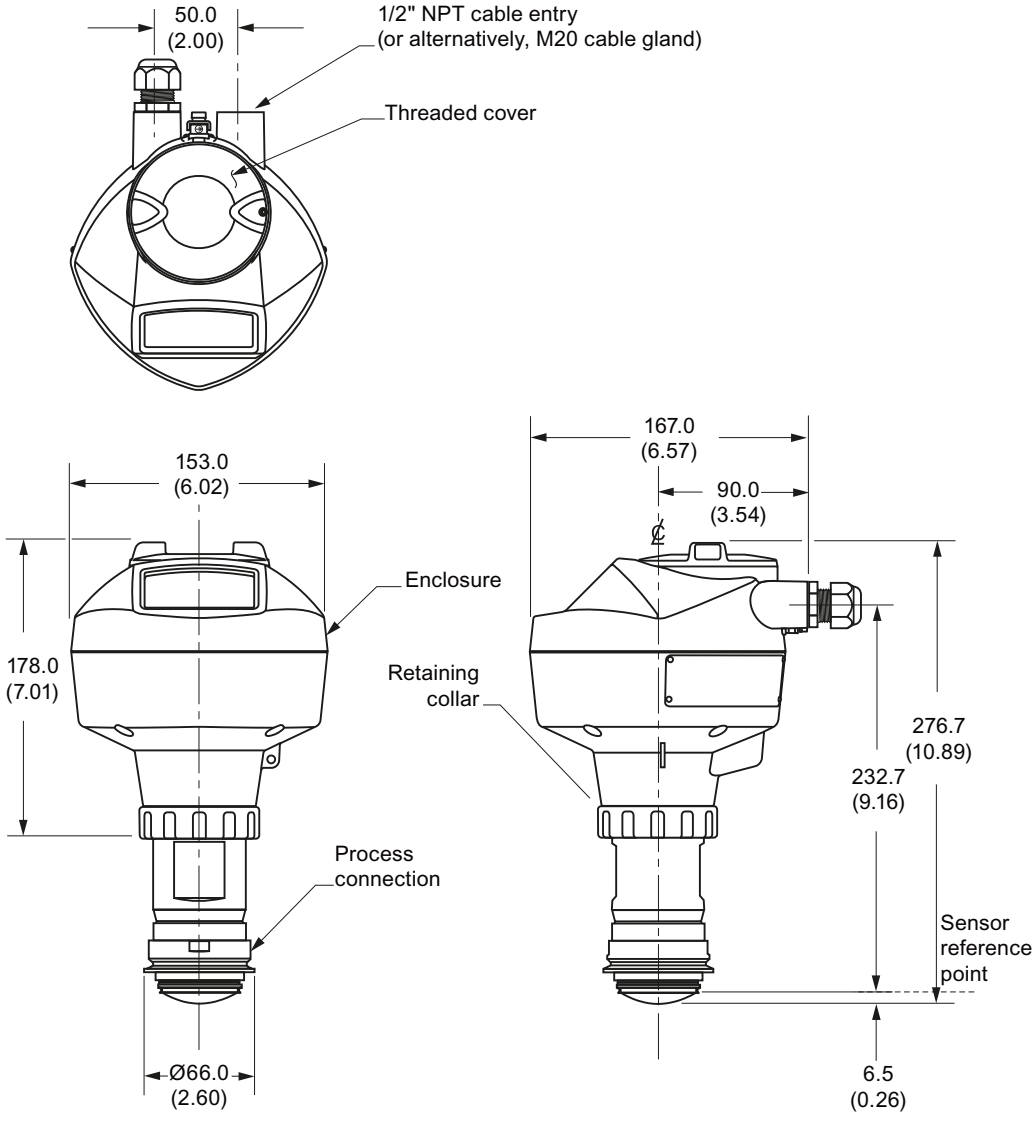

Dimensions in mm (inch)

12.28 Threaded PVDF antenna

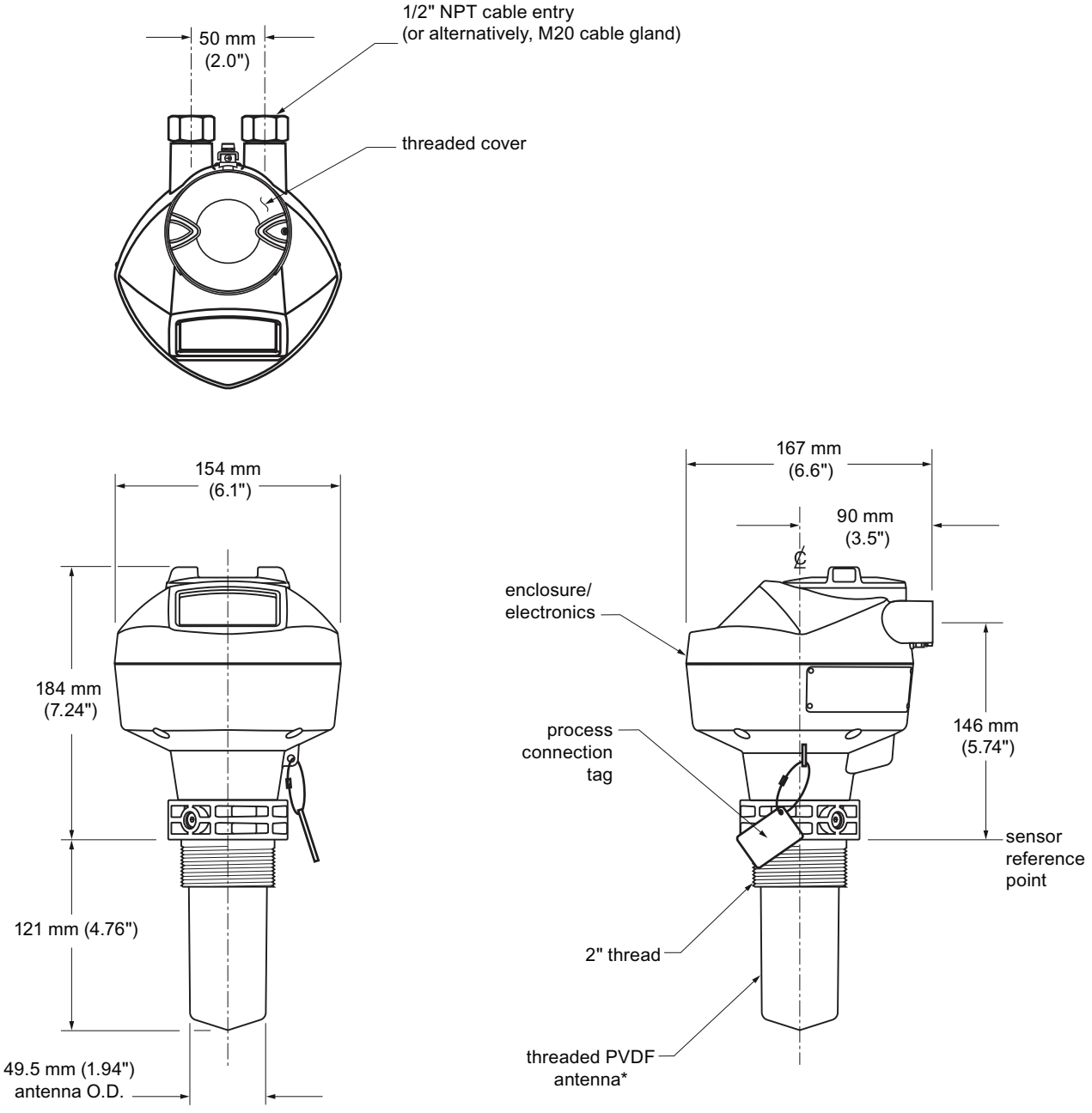

*The color of the antenna may vary.

Threaded PVDF antenna dimensions

Nominal antenna size	Antenna O.D.	Height to sensor reference point [a)]	Beam angle [b)]	Measurement range
50 mm (2")	49.5 mm (1.94")	121 mm (4.76")	19 degrees	10 m (32.8 ft)[c)]

[a)] Height from bottom of antenna to sensor reference point as shown: see dimension drawing.

[b] -3dB in the direction of the polarization axis. See Polarization reference point (Page 29) for an illustration.

[c] 20m when installed in stillpipe.

12.29 Threaded connection markings

With the exception of the threaded PVDF antenna, threaded connection markings are found on the flat face/faces of the process connection.

Serial number: a unique number allotted to each process connection, including the date of manufacture (MMDDYY) followed by a number from 001 to 999, (indicating the sequential unit produced).

12.30 Raised-Face flange

Stainless steel or optional alloy N06022/2.4602 (Hastelloy® C-22)

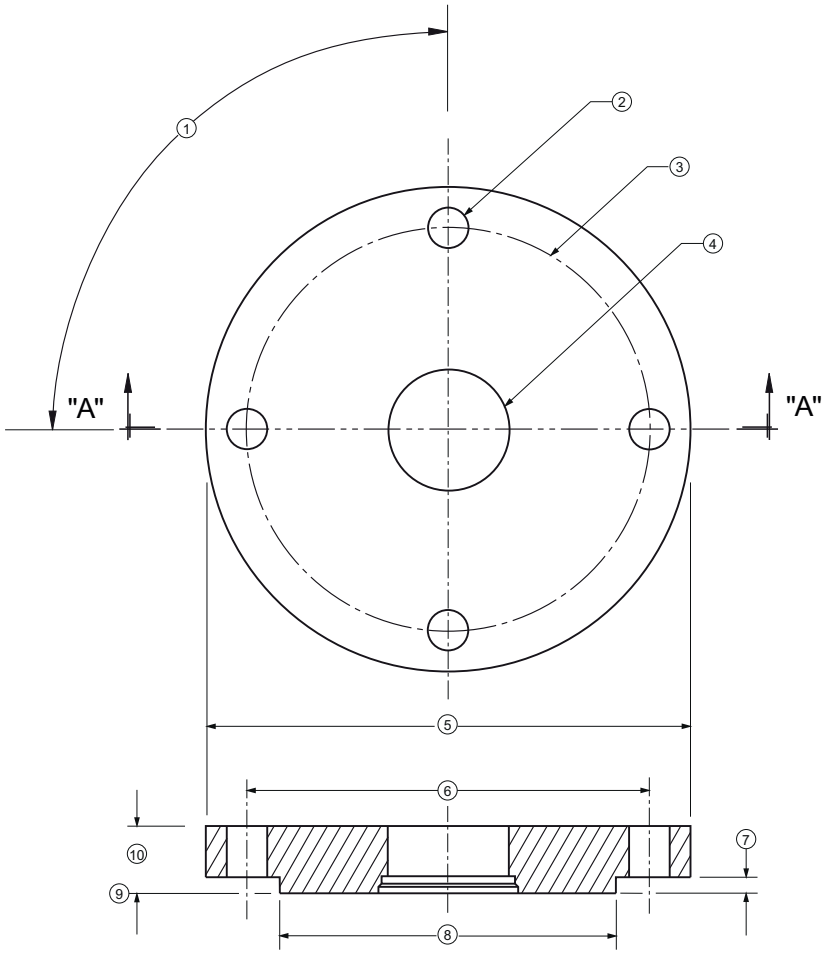

① angle of adjacent bolt holes
② bolt hole diameter
③ bolt hole circle diameter
④ waveguide mounting hole
⑤ Flange O.D.
⑥ bolt hole circle diameter
⑦ facing height
⑧ facing diameter
⑨ sensor reference point
⑩ thickness

Raised-Face flange dimensions

Pipe size	Flange bolt hole pattern	⑤ Flange O.D. (mm)	③ Bolt hole circle Ø (mm)	② Bolt hole Ø (mm)	No. of bolts	① Angle of adjacent bolt holes	⑧ Facing Ø (mm)	⑩ Thickness (mm)
DN50	PN10/PN16	165	125	18	4	90	102	18
DN80	PN10/PN16	200	160	18	8	45	138	20
DN100	PN10/PN16	220	180	18	8	45	158	20

Pipe size	Flange bolt hole pattern	⑤ Flange O.D. (mm)	③ Bolt hole circle Ø (mm)	② Bolt hole Ø (mm)	No. of bolts	① Angle of adjacent bolt holes	⑧ Facing Ø (mm)	⑩ Thickness (mm)
DN150	PN10/PN16	285	240	22	8	45	212	22
DN50	PN25/PN40	165	160	18	4	90	138	20
DN80	PN25/PN40	200	160	18	8	45	138	24
DN100	PN25/PN40	235	190	22	8	45	162	24
DN150	PN25/PN40	300	250	26	8	45	218	28

ANSI Raised-Face flange dimensions

Pipe size	Flange bolt hole pattern (lb)	Flange O.D. (mm)	Bolt hole circle Ø (mm)	Bolt hole Ø (mm)	No. of bolts	Angle of adjacent bolt holes	Thickness (mm)	Eyelet feature location		Facing Ø (mm)
								Angle	Distance	Facing thickness (mm)
2"	150	152.4	120.7	19.1	4	90	22.4	45	60.4	92.1
										2.0
3"	150	190.5	152.4	19.1	4		24.4		76.2	127.0
										2.0
4"	150	228.6	190.5	19.1	8	45	31.8	22.5	95.3	157.2
										2.0
2"	300	165.1	127.0	19.1	8		28.4		63.5	92.1
										2.0
3"	300	209.6	168.3	22.3	8		35.1		84.2	127.0
										2.0
4"	300	254.0	200.2	22.3	8		38.1		100.1	157.2
										2.0

Raised-Face flange markings

Blind Flange Markings (Optional Manufacturer's Logo [optional]; Flange Standard; Nominal Size; Material; Heat Code)	Machining Identification			Welded Assembly Identification [a)]		
	Serial no.	Logo	Flange series	Flange series	Heat Code no.	Facing
Manufacturer's logo; EN 1092-1 05 'B1'; 'DN50' 'PN16' '1.4404 or 1.4435' A1B2C3	mmddyyxxxx		xxxxx	xxxxx	A1B2C3	RF

[a)] When flange material is alloy N06022/2.4602, additional material and heat code identification is provided.

The flange markings are located around the outside edge of the flange.

Serial number: a unique number allotted to each flange, including the date of manufacture (MMDDYY) followed by a number from 001 to 999 (indicating the sequential unit produced).

Flange series: the Siemens Milltronics drawing identification.

Heat code: a flange material batch code identification.

12.31 Raised-Face flange per EN 1092-1 for flanged encapsulated antenna

Stainless steel

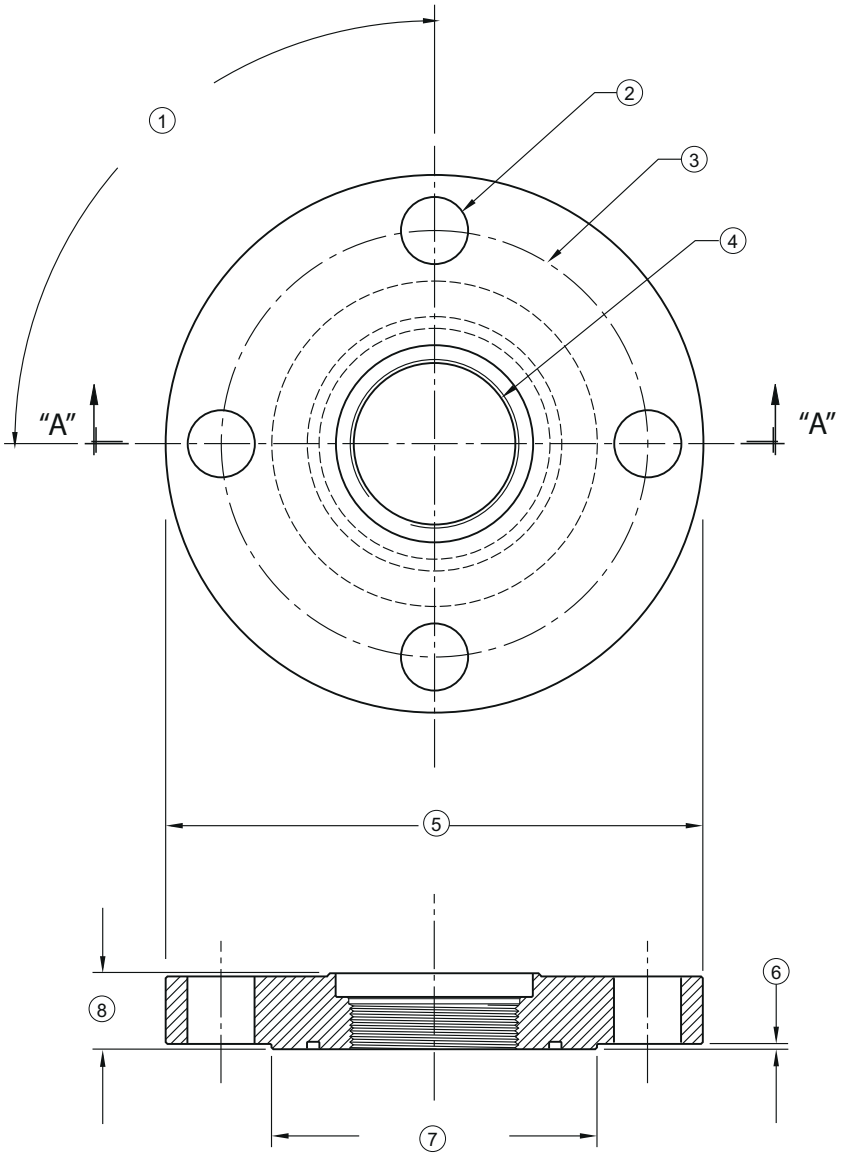

VIEW "A"-"A"

①	angle of adjacent bolt holes	⑤	flange O.D.
②	bolt hole diameter	⑥	facing height
③	bolt hole circle diameter	⑦	facing diameter
④	antenna	⑧	flange thickness

Raised-Face flange dimensions

Pipe size	Flange class	⑤ Flange O.D. [mm (inch)]	③ Bolt hole circle Ø [mm (inch)]	② Bolt hole Ø [mm (inch)]	No. of bolt holes	① Angle of adjacent bolt holes	⑦ Facing Ø [mm (inch)]	⑨ Flange thick-ness [mm (inch)]	⑥ Flange facing thickness [mm (inch)]
2"	150 LB	152 (5.98)	120.7 (4.75)	19 (0.75)	4	90	92.1 (3.63)	20.6 (0.81)	1.5 (0.06)
3"		190 (7.48)	152.4 (6.00)				127 (5.00)	25.9 (1.02)	2 (0.08)
4"		230 (9.06)	190.5 (7.50)		8	45	157.2 (6.19)		2 (0.08)
6"		280 (11.02)	241.3 (9.50)	22.2 (0.87)			215.9 (8.50)	26.9 (1.06)	1.5 (0.06)
DN50	PN10/16	155 (6.10)	125 (4.92)	18 (0.71)	4	90	102 (4.02)	18 (0.71)	2 (0.08)
DN80		200 (7.87)	160 (6.30)		8	45	138 (5.43)	20 (0.79)	2 (0.08)
DN100		220 (8.66)	180 (7.09)				158 (6.22)		2 (0.08)
DN150		285 (11.22)	240 (9.45)	22 (0.87)			212 (8.35)	22 (0.87)	2 (0.08)
50A	10K	155 (6.10)	120 (4.72)	19 (0.75)	4	90	96 (3.78)	16 (0.63)	2 (0.08)
80A		185 (7.28)	150 (5.91)		8	45	126 (4.96)	18 (0.71)	2 (0.08)
100A		210 (8.27)	175 (6.89)				151 (5.94)		2 (0.08)
150A		280 (11.02)	240 (9.45)	23 (0.91)			212 (8.35)	22 (0.87)	2 (0.08)

Raised-Face flange markings

Blind Flange Markings (Optional Manufacturer's Logo [optional]; Flange Standard; Nominal Size; Material; Heat Code)	Machining Identification			Welded Assembly Identification		
	Serial no.	Logo	Flange series	Flange series	Heat Code no.	Facing
Manufacturer's logo; EN 1092-1 05 'B1'; 'DN50' 'PN16' '1.4404 or 1.4435' A1B2C3	mmddyyxxxx		xxxxx	xxxxx	A1B2C3	RF

The flange markings are located around the outside edge of the flange.

Serial number: a unique number allotted to each flange, including the date of manufacture (MMDDYY) followed by a number from 001 to 999 (indicating the sequential unit produced).

Flange series: the Siemens Milltronics drawing identification.

Heat code: a flange material batch code identification.

12.32 Flat-Face flange

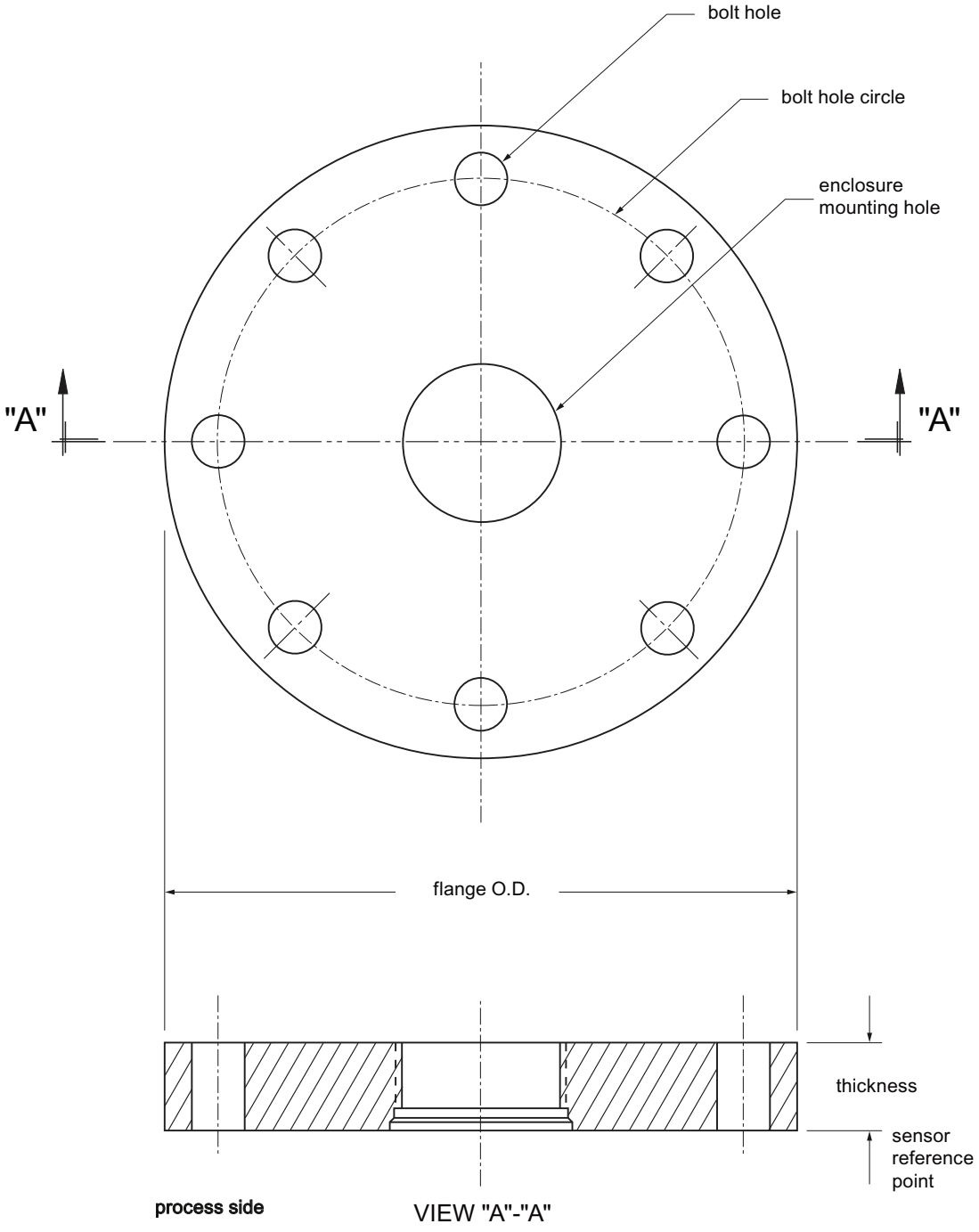

Flat-Face flange dimensions

Flange size [a]	Flange class	Flange O.D.	Bolt hole circle Ø	Bolt hole Ø	No. of bolt holes	Thickness
2"	ASME 150 lb	6.0"	4.75"	0.75"	4	0.88"
3"	ASME 150 lb	7.5"	6.0"	0.75"	4	0.96"
4"	ASME 150 lb	9.0"	7.50"	0.75"	8	1.25"
2"	ASME 300 lb	6.50"	5.00"	0.75"	8	1.12"
3"	ASME 300 lb	8.25"	6.62"	0.88"	8	1.38"
4"	ASME 300 lb	10.00"	7.88"	0.88"	8	1.50"
DN50	EN PN16	165 mm	125 mm	18 mm	4	24.4 mm
DN80	EN PN16	200 mm	160 mm	18 mm	8	31.8 mm
DN100	EN PN16	220 mm	180 mm	18 mm	8	31.8 mm
DN50	EN PN40	165 mm	125 mm	18 mm	4	25.4 mm
DN80	EN PN40	200 mm	160 mm	18 mm	8	31.8 mm
DN100	EN PN40	235 mm	190 mm	22 mm	8	38.1 mm
50A	JIS 10K	155 mm	120 mm	19 mm	4	23.8 mm
80A	JIS 10K	185 mm	150 mm	19 mm	8	24.4 mm
100A	JIS 10K	210 mm	175 mm	19 mm	8	28.5 mm

[a] A 2" flange is designed to fit a 2" pipe: for actual flange dimensions see Flange O.D. Flange markings located around the outside edge of the flat faced flange identify the flange assembly on which the device is mounted.

Flat-Face flange markings

Flat Face Flange Identification							Welded Assembly Identification	
Serial No.	Logo	Flange series			Material	Heat code	Flange series	Heat code no.
		Series	Nominal size					
MMDDYYXXX		25556	2	150	316L/ 1.4404 or 316L/ 1.4435	A1B2C3	25546	A1B2C3
			DN80	PN16				

Serial number: A unique number allotted to each flange, including the date of manufacture (MMDDYY) followed by a number from 001 to 999 (indicating the sequential unit produced).

Flange series: The Siemens Milltronics drawing identification.

Nominal size: The flange size followed by the hole pattern for a particular flange class. For example:

- A 2 inch ASME B16.5 150 lb class flange (North America)
- A DN80 EN 1092-1 PN16 class flange (Europe)

Material: The basic flange material (AISI or EU material designation). North American material codes are followed by European ones. For example, material designation 316L/1.4404.

Heat code: A flange material batch code identification.

12.33 Aseptic/hygienic flange DN50, DN80, DN100 for DIN 11864-2

Aseptic/hygienic flange DN50

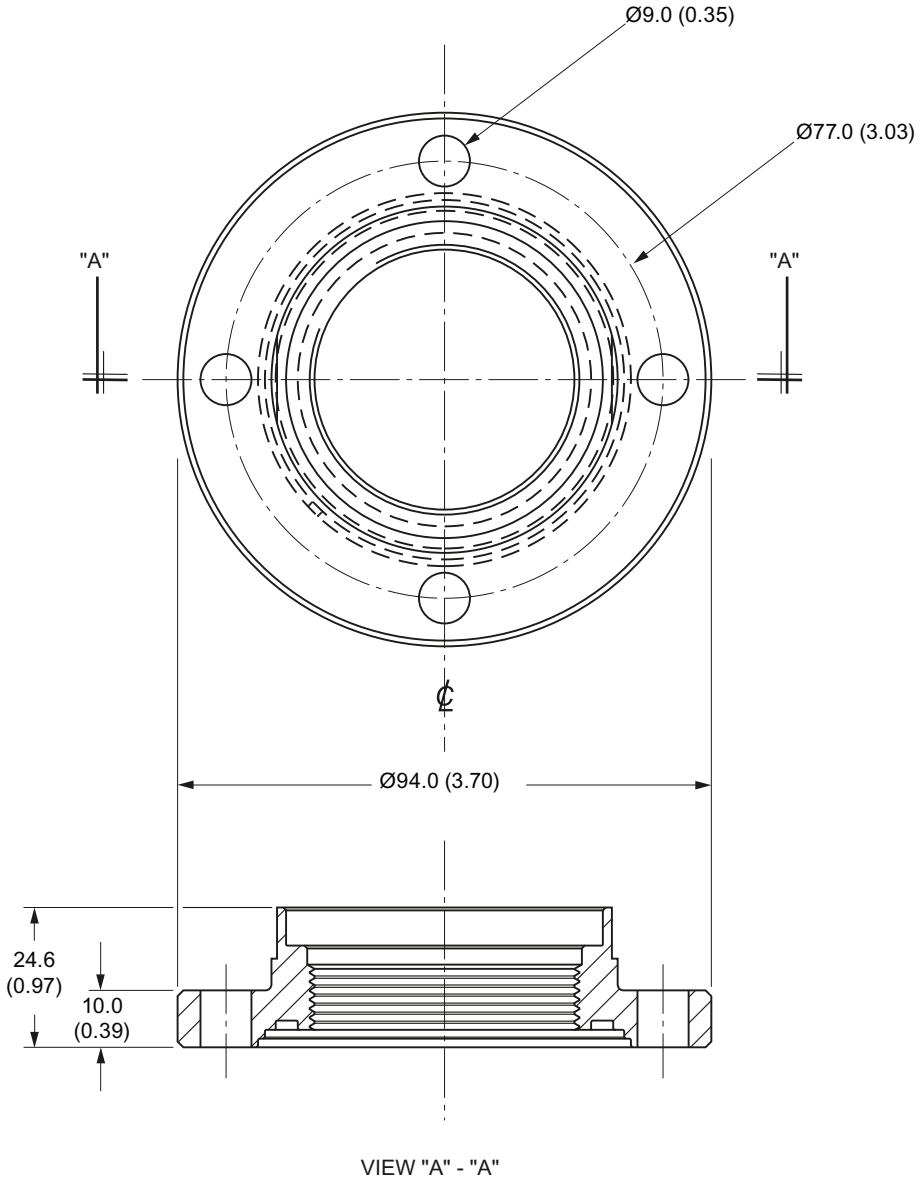

Dimensions in mm (inch)

Aseptic/hygienic flange DN80

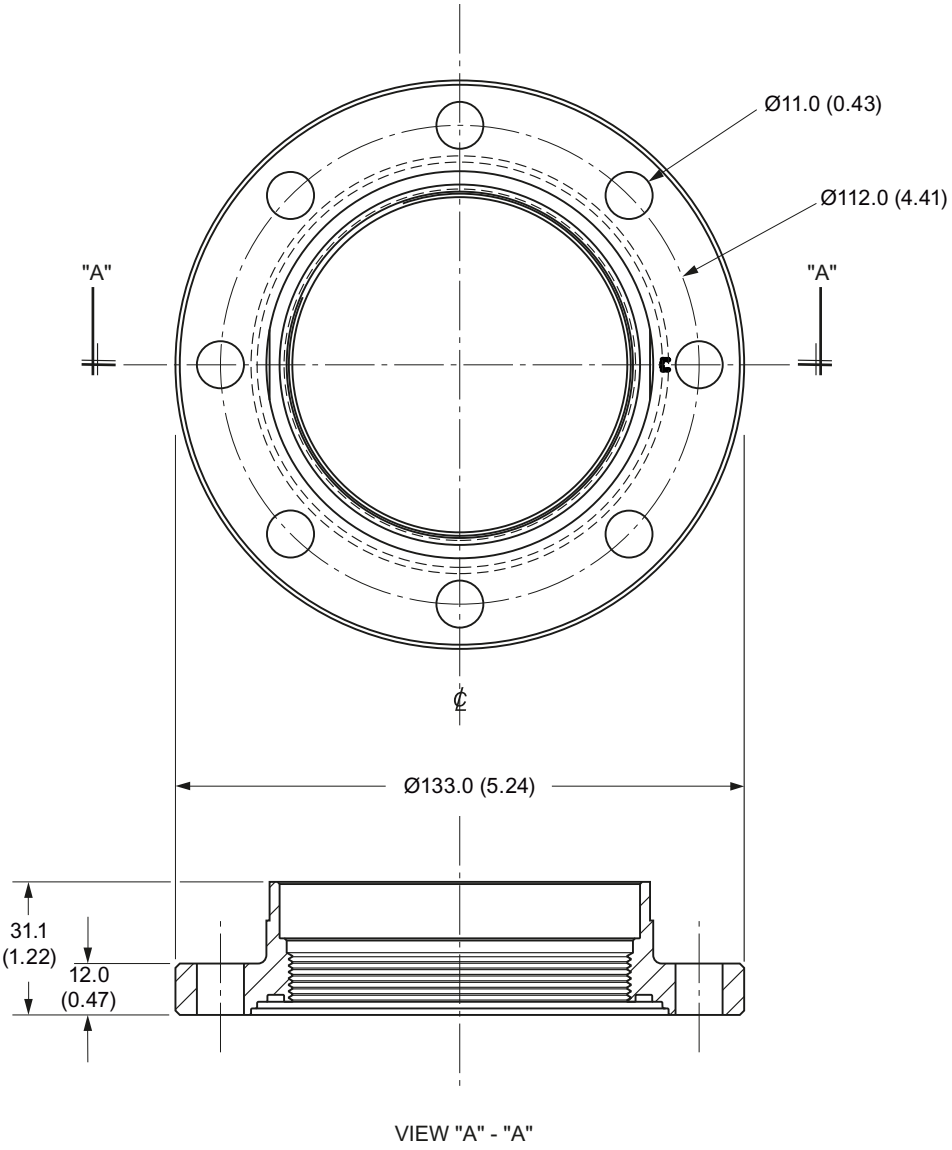

Dimensions in mm (inch)

Aseptic/hygienic flange DN100

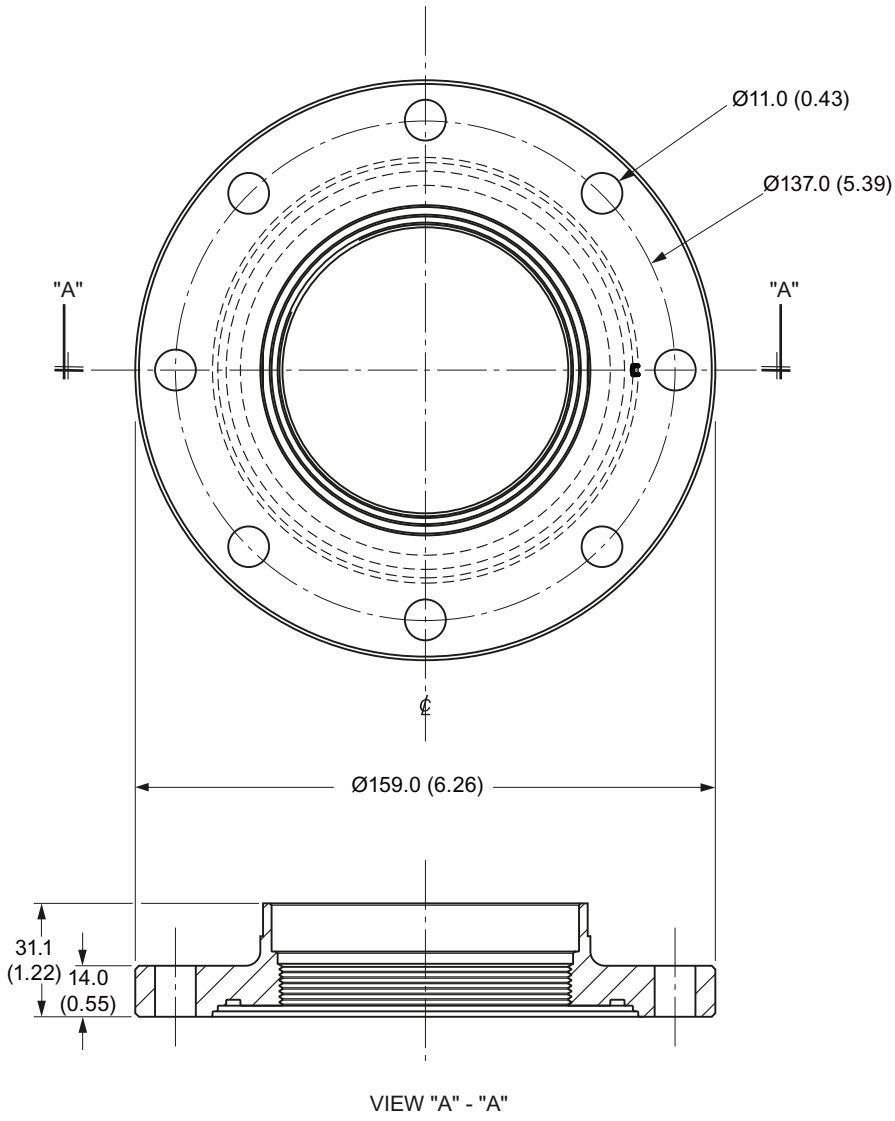

Dimensions in mm (inch)

12.34 Process connection tag (pressure rated versions)

For pressure-rated versions only, the process connection label lists the following information:

Process connection tag (pressure rated versions)

Item	Sample Text	Comments/Explanation
SERIAL #	GYZ / 00000000	Pressure Boundary Assembly
NOMINAL PIPE SIZE (DN)	4 INCH / 100mm	Nominal Pipe Size
INSTRUMENT MAWP (PS)	11.0 BAR	Maximum Allowable Working Pressure at Design Temperature for the device

Item	Sample Text	Comments/Explanation
DESIGN TEMP. (TS)	200 ºC	Maximum Allowable Working Temperature
MINIMUM PROCESS	15.9 BAR AT 40 ºC	Minimum Wetted Process Conditions
TEST PRESSURE (PT)	22.7 BAR	Production Test Pressure
TEST DATE	10/11/11	Date of Pressure Test (Year/Month/Day)
CONNECTION SERIES	ASME B16.5	Flange Series: dimensional pattern based on ASME B16.5 flange standards
PROCESS SERIES	25546	Pressure Tag Family Series
WETTED NON-METALLICS	TFM	Antenna Emitter
WETTED METALLICS	316L	Process Connection Material(s)
WETTED SEALS	FKM	Seal Material(s)

- Minimum Wetted Process Conditions: the minimum pressure and temperature to which the device assembly may be exposed in the process, and continue to provide a pressure-retaining function.
- Pressure Tag Family Series: the identification number used to indicate specific process connection information relating to operating conditions.
- For Flanged encapsulated antenna: this information is laser-etched on antenna body

BACK FACE	
Sample Text	Comments/Explanation
CRN 0Fxxxxx.5	Canadian Registration Number (CRN)

Appendix A: Technical reference

A

Note

Where a number follows the parameter name [for example, **Master Reset (4.1.)**] this is the parameter access number via the handheld programmer. See Parameter Reference (Page 107) for a complete list of parameters.

A.1 Principles of operation

SITRANS LR250 is a 2-wire 25 GHz pulse radar level transmitter for continuous monitoring of liquids and slurries. (The microwave output level is significantly less than that emitted from cellular phones.) Radar level measurement uses the time of flight principle to determine distance to a material surface. The device transmits a signal and waits for the return echo. The transit time is directly proportional to the distance from the material.

Pulse radar uses polarized electromagnetic waves. Microwave pulses are emitted from the antenna at a fixed repetition rate, and reflect off the interface between two materials with different dielectric constants (the atmosphere and the material being monitored).

Electromagnetic wave propagation is virtually unaffected by temperature or pressure changes, or by changes in the vapor levels inside a vessel. Electromagnetic waves are not attenuated by dust.

SITRANS LR250 consists of an enclosed electronic circuit coupled to an antenna and process connection. The electronic circuit generates a radar signal (25 GHz) that is directed to the antenna.

The signal is emitted from the antenna, and the reflected echoes are digitally converted to an echo profile. The profile is analyzed to determine the distance from the material surface to the sensor reference point. See Dimension drawings (Page 175). This distance is used as a basis for the display of material level and mA output.

A.2 Echo Processing

A.2.1 Process Intelligence

The signal processing technology embedded in Siemens radar level devices is known as **Process Intelligence**.

Process intelligence provides high measurement reliability regardless of the dynamically changing conditions within the vessel being monitored. The embedded Process Intelligence dynamically adjusts to the constantly changing material surfaces within these vessels.

Process Intelligence is able to differentiate between the true microwave reflections from the surface of the material and unwanted reflections being returned from obstructions such as seam welds or supports within a vessel. The result is repeatable, fast and reliable measurement. This technology was developed as result of field data gained over some twenty years from more than 1,000,000 installations in many industries around the world.

Higher order mathematical techniques and algorithms are used to provide intelligent processing of microwave reflection profiles. This "knowledge based" technique produces superior performance and reliability.

A.2.2 Echo Selection

Time Varying Threshold (TVT)

A Time Varying Threshold (TVT) hovers above the echo profile to screen out unwanted reflections (false echoes).

In most cases the material echo is the only one which rises above the default TVT.

In a vessel with obstructions, a false echo may occur. See Auto False Echo Suppression (Page 228) for more details.

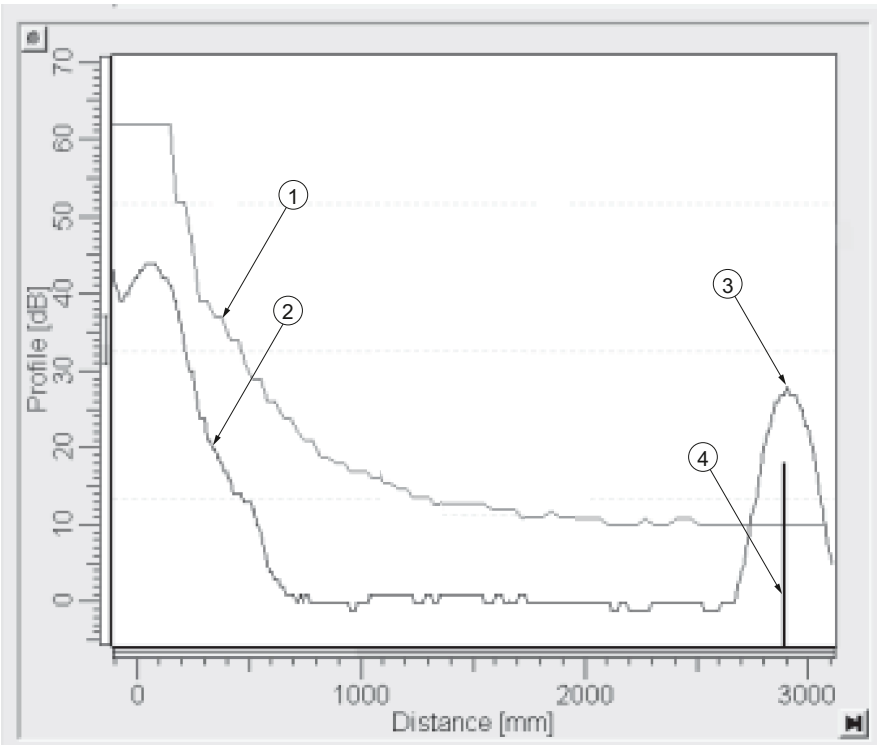

① default TVT
② echo profile
③ material level
④ echo marker

The device characterizes all echoes that rise above the TVT as potential good echoes. Each peak is assigned a rating based on its strength, area, height above the TVT, and reliability, amongst other characteristics.

Algorithm (2.8.4.1.)

The true echo is selected based on the setting for the Echo selection algorithm. Options are **t**rue **F**irst Echo, **L**argest Echo, or **b**est of **F**irst and **L**argest.

Position Detect (2.8.4.2.)

The echo position detection algorithm determines which point on the echo will be used to calculate the precise time of flight, and calculates the range using the calibrated propagation velocity (see **Propagation Factor (2.8.3.)** for values). There are three options:

- **Center**
- **Hybrid**
- **CLEF** (Constrained Leading Edge Fit)

Center

Uses center of the echo.

Hybrid

Uses the Center algorithm for the top part of the vessel, and the CLEF algorithm for the part nearest the vessel bottom, according to the setting for **CLEF range**.

CLEF (Constrained Leading Edge Fit)

- Uses the leading edge of the echo.
- Is used mainly to process the echo from materials with a low dK value.

In an almost empty flat-bottomed vessel, a low dK material may reflect an echo weaker than the echo from the vessel bottom. The echo profile shows these echoes merging. The device may then report a material level equal to or lower than empty.

The CLEF algorithm enables the device to report the level correctly.

Example: CLEF off: Position set to Hybrid

Vessel height: 1.5 m; CLEF range set to 0 (Center algorithm gives the same result.)

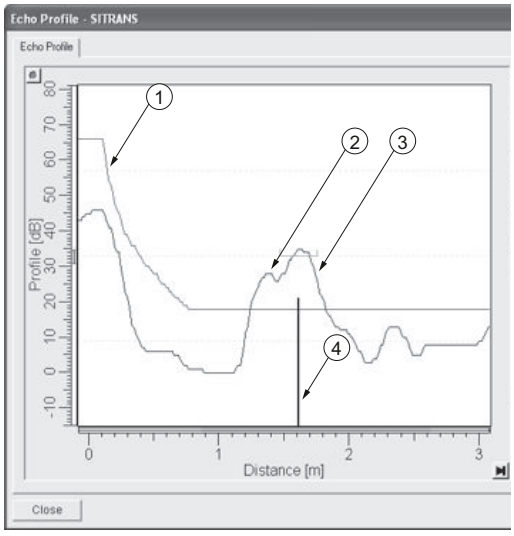

① default TVT
② material echo
③ vessel bottom echo selected
④ echo marker

Example: CLEF enabled

Vessel height: 1.5 m; CLEF range set to 0.5 m

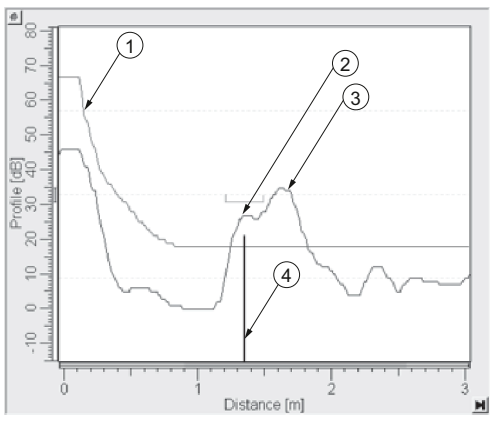

① default TVT
② material echo selected
③ vessel bottom echo
④ echo marker

A.2.3 CLEF Range

CLEF Range (2.8.4.4.) is referenced from Low Calibration Point (process empty level). When the **Hybrid** algorithm is selected in **Position Detect (2.8.4.2.)**, the CLEF algorithm will be applied up to the limit of CLEF Range. Above this limit the Center algorithm will be applied.

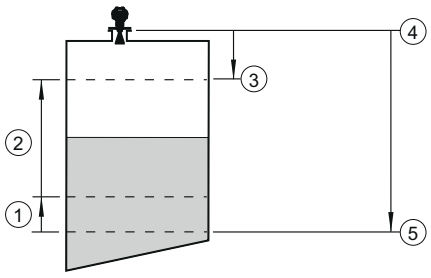

① CLEF Range
② (Center algorithm applied)
③ High Calibration Point (process full level)
④ Sensor reference point
⑤ Low Calibration Point (process empty level)

A.2.4 Echo Threshold

Confidence (2.8.6.1.) describes the quality of an echo. Higher values represent higher quality. **Echo Threshold (2.8.4.3.)** defines the minimum confidence value required for an echo to be accepted as valid and evaluated.

A.2.5 Echo Lock

If the echo selected by **Algorithm** is within the Echo Lock window, the window is centered about the echo, which is used to derive the measurement. In radar applications, two measurement verification options are used with **Echo Lock (2.8.5.1.)**:

Lock Off

SITRANS LR250 responds immediately to a new selected echo (within the restrictions set by the Maximum Fill / Empty Rate), but measurement reliability is affected.

Material Agitator

A new measurement outside the Echo Lock Window must meet the sampling criteria before the window will move to include it.
The other available options, **Maximum Verification** and **Total Lock** are not recommended for radar.

A.2.6 Auto False Echo Suppression

Note

- For detailed instructions on using this feature via PDM see Auto False Echo Suppression (Page 74).
- For detailed instructions on using this feature via the handheld programmer see **Auto False Echo Suppression (2.8.7.1.).**

Auto False Echo Suppression is designed to learn a specific environment (for example, a particular vessel with known obstructions), and in conjunction with Auto False Echo Suppression Range to remove false echoes appearing in front of the material echo.

The material level should be below all known obstructions at the moment when Auto False Echo Suppression learns the echo profile. Ideally the vessel should be empty or almost empty, and if an agitator is present, it should be running.

The device learns the echo profile over the whole measurement range and the TVT is shaped around all echoes present at that moment.

Auto False Echo Suppression Range (2.8.7.2.)

Auto False Echo Suppression Range specifies the range within which the learned TVT is applied. Default TVT is applied over the remainder of the range.

The learned TVT screens out the false echoes caused by obstructions. The default TVT allows the material echo to rise above it.

Auto False Echo Suppression Range must be set to a distance shorter than the distance to the material level when the environment was learned, to avoid the material echo being screened out.

Example before Auto False Echo Suppression

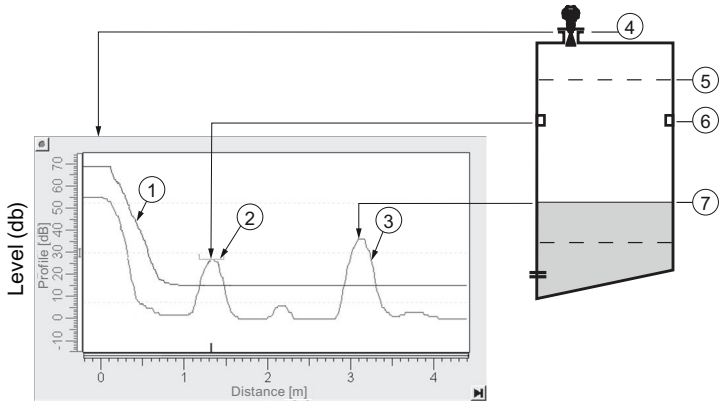

①	default TVT	⑤	high calibration point = 0
②	false echo	⑥	obstruction at 1.3. m
③	material echo	⑦	material level at 3.2 m
④	sensor reference point		

Example after Auto False Echo Suppression

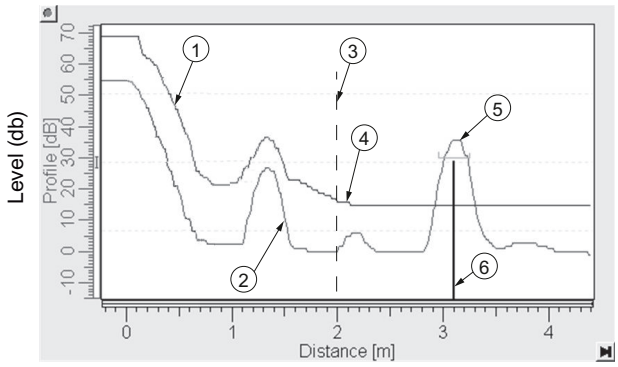

Auto False Echo Suppression Range set to 2 m

① learned TVT
② false echo
③ Auto False Echo Suppression Range
④ default TVT
⑤ material echo
⑥ echo marker

A.2.7 Measurement Range

Near Range (2.8.1.)

Near Range programs SITRANS LR250 to ignore the zone in front of the antenna. The default blanking distance is 50 mm (1.97") from the end of the antenna.

Near Range allows you to increase the blanking value from its factory default. But **Auto False Echo Suppression (2.8.7.1.)** is generally recommended in preference to extending the blanking distance from factory values.

Far Range (2.8.2.)

Far Range can be used in applications where the base of the vessel is conical or parabolic. A reliable echo may be available below the vessel empty distance, due to an indirect reflection path.

Increasing Far Range to 30% or 40% can provide stable empty vessel readings.

A.2.8 Measurement Response

Note

Units are defined in **Units (2.2.1.)** and are in meters by default.

Response Rate (2.4.1.) limits the maximum rate at which the display and output respond to changes in the measurement. There are three preset options: slow, medium, and fast.

Once the real process fill/empty rate (m/s by default) is established, a response rate can be selected that is slightly higher than the application rate. Response Rate automatically adjusts the filters that affect the output response rate.

Response Rate (2.4.1.)		Fill Rate per Minute (2.4.2.)/Empty Rate per Minute (2.4.3.)	Damping Filter (2.2.4.)
*	Slow	0.1 m/min (0.32 ft/min)	10 s
	Medium	1.0 m/min (3.28 ft.min)	10 s
	Fast	10.0 m/min (32.8 ft/min)	0 s

A.2.9 Damping

Damping Filter (2.2.4.) smooths out the response to a sudden change in level. This is an exponential filter and the engineering unit is always in seconds.

In 5 time constants the output rises exponentially: from 63.2% of the change in the first time constant, to almost 100% of the change by the end of the 5th time constant.

Damping example

time constant = 2 seconds
input (level) change = 2 m

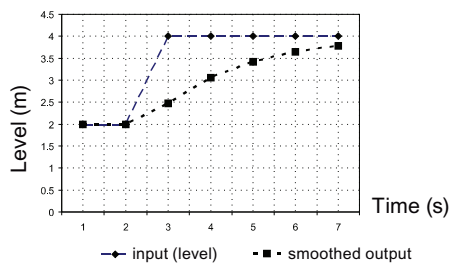

A.3 Analog Output

The mA Output (current output) is proportional to material level in the range 4 to 20 mA. 0% and 100% are percentages of the full-scale reading (m, cm, mm, ft, in). Typically mA output is set so that 4 mA equals 0% and 20 mA equals 100%.

When SITRANS LR250 is put into PROGRAM mode (for example, by navigating through the menu) it stops updating the output of the device (local user interface and mA Output). It stores the most recent measurement, and holds the associated readings and mA signal output. The device reverts to the parameter last addressed during the previous program session.

When the device is returned to Measurement mode, the transceiver resumes operation. The reading and mA output default to the last measurement taken. The reading and associated outputs migrate to the current process level at a rate controlled by Response Rate (2.4.1.).

If the device is left in PROGRAM mode for 10 minutes without input, it automatically reverts to Measurement mode.

A.3.1 Sensor Mode

This parameter controls the input. Depending on the reference point used, the measurement reports either Level, Space, or Distance. By default Sensor Mode is set to **Level**.

Operation	Description	Reference point
NO SERVICE	Measurement and associated loop current not being updated. Device defaults to Fail-safe mode [1].	
LEVEL	Distance to material surface	Low Calibration Point (process empty level)
SPACE	Distance to material surface	High Calibration Point (process full level)
DISTANCE	Distance to material surface	Sensor reference point

[1] See Fail-safe Mode (Page 232).

You also have the option to put the device out of service, in which case the device defaults to Fail-safe mode, and the reported level depends on the device type. A standard device reports the last valid reading, and a NAMUR NE 43-compliant device reports the user-defined value for Material Level (3.58 mA by default).

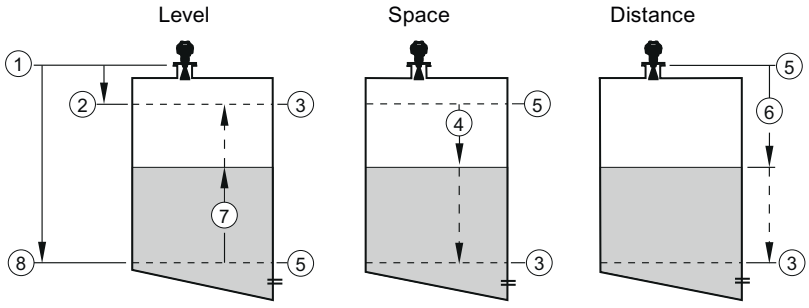

① Sensor reference point
② High calibration point
③ 20 mA 100%
④ Space
⑤ 4 mA 0%
⑥ Distance
⑦ Level
⑧ Low calibration point

A.3.2 Current Output Function

Current Output Function (2.6.1.) controls the mA output and applies any relevant scaling. By default it is set to **Level**. Other options are Space, Distance, and Volume. (The device can carry out a volume calculation only after a vessel shape has been specified.)

When a volume application type is chosen, Sensor Mode remains as **Level** and the mA Output is automatically converted to **Volume**.

To view the mA reading in the secondary region of the LCD, press 5 on the handheld programmer.

A.3.3 Loss of Echo (LOE)

A loss of echo (LOE) occurs when the calculated measurement is judged to be unreliable because the echo confidence value has dropped below the echo confidence threshold.

Confidence (2.8.6.1.) describes the quality of an echo. Higher values represent higher quality.

Echo Threshold (2.8.4.3.) defines the minimum confidence value required for an echo to be accepted as valid and evaluated.

If the LOE condition persists beyond the time limit set in **LOE Timer (2.5.2.)** the LCD displays the Service Required icon, and the text region displays the fault code **S: 0** and the text LOE.

If two faults are present at the same time, the fault code, error text, and error icon for each fault are displayed alternately. For example, Loss of Echo and Fail-safe.

S: 0 LOE

S: 52 Fail-safe

A.3.4 Fail-safe Mode

The purpose of the Fail-safe setting is to put the process into a safe mode of operation in the event of a fault or failure. The value to be reported in the event of a fault is selected so that a loss of power or loss of signal triggers the same response as an unsafe level.

LOE Timer (2.5.2.) determines the length of time a **Loss of Echo (LOE)** condition will persist before a Fail-safe state is activated. The default setting is 100 seconds.

Material Level (2.5.1.) determines the material level to be reported when **LOE Timer (2.5.2.)** expires, depending on the device type (standard or NAMUR NE 43-compliant.)

STANDARD DEVICE			
Options		**HI**	**20.5** mA (max. mA Limit)
		LO	**3.8** mA (min. mA Limit)
	*	**HOLD**	Last valid reading
		VALUE	User-selected value defined in **Fail-Safe mA Value (2.5.3.)**

NAMUR NE 43-COMPLIANT DEVICE			
Options		**HI**	**20.5** mA (max. mA Limit)
		LO	**3.8** mA (min. mA Limit)
		HOLD	Last valid reading
	*	**VALUE**	User-selected value **Fail-Safe mA Value (2.5.3.)**, default 3.58 mA

Upon receiving a reliable echo, the loss of echo condition is aborted, the Service Required icon and error message are cleared, and the reading and mA output return to the current material level.

A.4 Maximum Process Temperature Chart

WARNING

Exceeded maximum internal and process temperatures

Danger of device malfunction

- Internal temperature must not exceed +80 ° C (+176 °F).
- Process temperature must not exceed limits specified by the antenna type.

Note

- The chart below is for guidance only.
- The chart does not represent every possible process connection arrangement. For example, it will NOT apply if you are mounting SITRANS LR250 directly on a metallic vessel surface.
- The chart does not take into consideration heating from direct sunlight exposure.

Maximum Process Temperatures versus allowable ambient

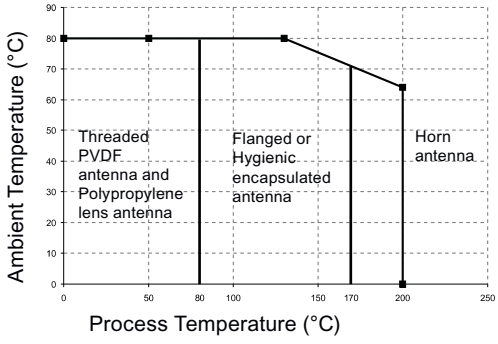

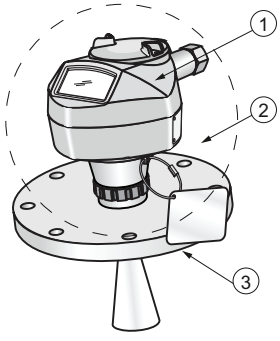

① Internal enclosure temperature
② Ambient temperature
③ Process temperature (at process connection)

Where the chart does not apply, please use your own judgement regarding the use of SITRANS LR250.

If the internal temperature exceeds the maximum allowable limit, a sun shield or a longer nozzle may be required.

See **Current Internal Temperature (3.2.1.)** to monitor the Internal Temperature.

A.5 Process Pressure/Temperature derating curves

WARNING

Exceeded maximum permissible operating pressure

Danger of injury or poisoning.

The maximum permissible operating pressure depends on the device version. The device can be damaged if the operating pressure is exceeded. Hot, toxic and corrosive process media could be released.

- Make sure that the device is suitable for the maximum permissible operating pressure of your system.

DANGER

Pressure applications

Danger to personnel, system and environment will result from improper disassembly.

- Never attempt to loosen, remove, or disassemble process connection while vessel contents are under pressure.

WARNING

Pressure applications

Danger to personnel, system and environment can result from improper installation.

- Improper installation may result in loss of process pressure.

WARNING

Unsuitable connecting parts

Risk of injury or poisoning.

In case of improper mounting, hot, toxic, and corrosive process media could be released at the connections.

- Ensure that connecting parts (such as flange gaskets and bolts) are suitable for connection and process media.

Note

Material compatibility

Siemens can provide you with support concerning selection of sensor components wetted by process media. However, you are responsible for the selection of components. Siemens accepts no liability for faults or failures resulting from incompatible materials.

A.5.1 Pressure Equipment Directive, PED, 14/68/EU

Siemens Level Transmitters with flanged, threaded, or sanitary clamp type process mounts have no pressure-bearing housing of their own and, therefore, do not come under the Pressure Equipment Directive as pressure or safety accessories (see EU Commission Guideline A-08 and A-20).

A.5.2 Stainless steel horn antenna

1.5", 2" and 3" [NPT, G (BSPP), R (BSPT)] Threaded Versions

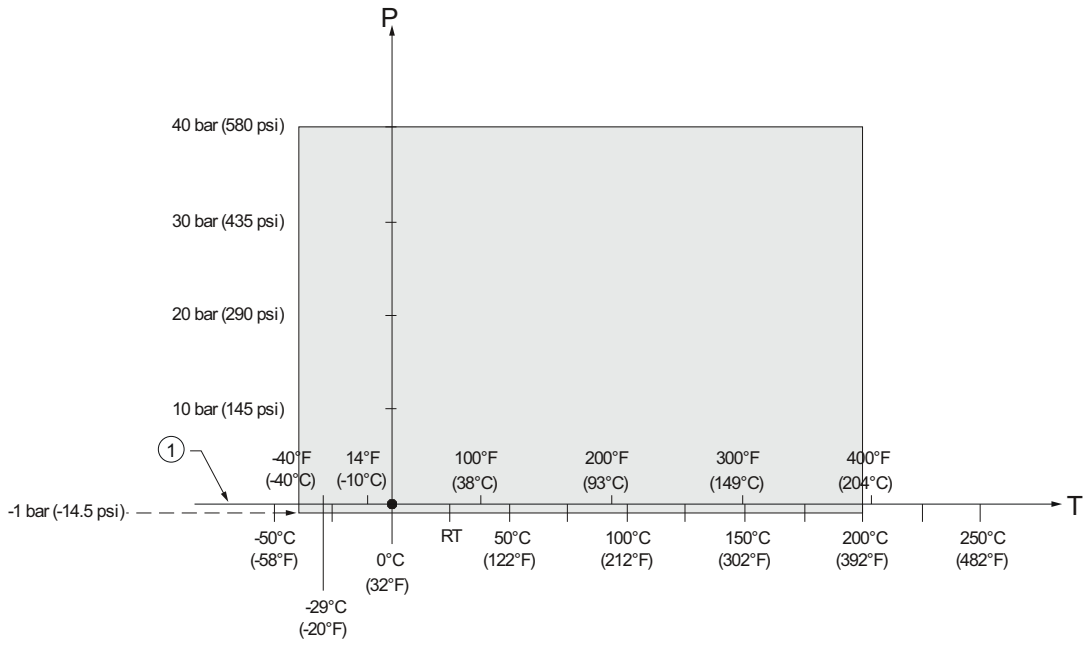

① Atmospheric

P Allowable operating pressures

T Allowable operating temperatures

A.5.3 Stainless steel flanged horn antenna

JIS B 2220, 10K: 50A, 80A, and 100A

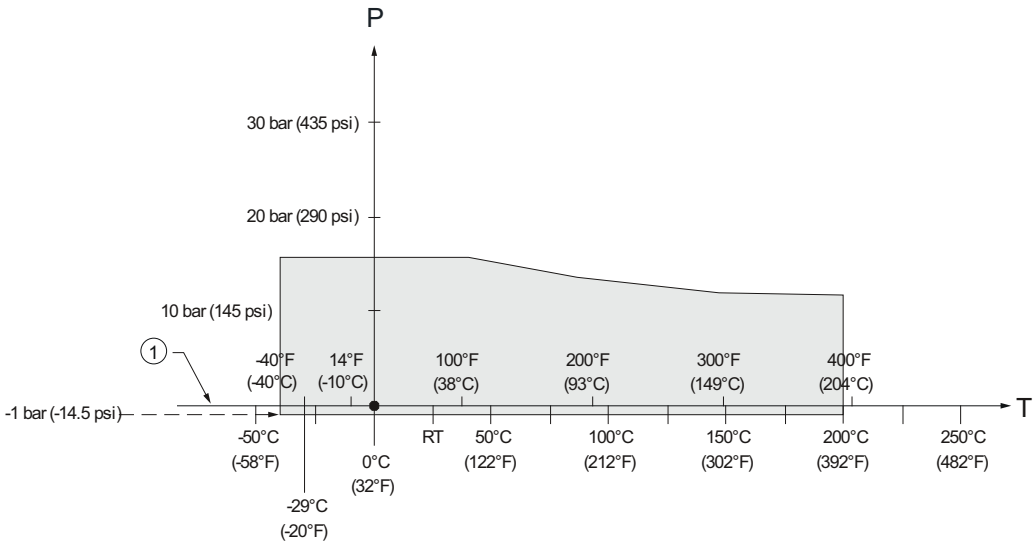

① Atmospheric
P Allowable operating pressures
T Allowable operating temperatures

EN1092-1, PN16: DN50, DN80, DN100, and DN150

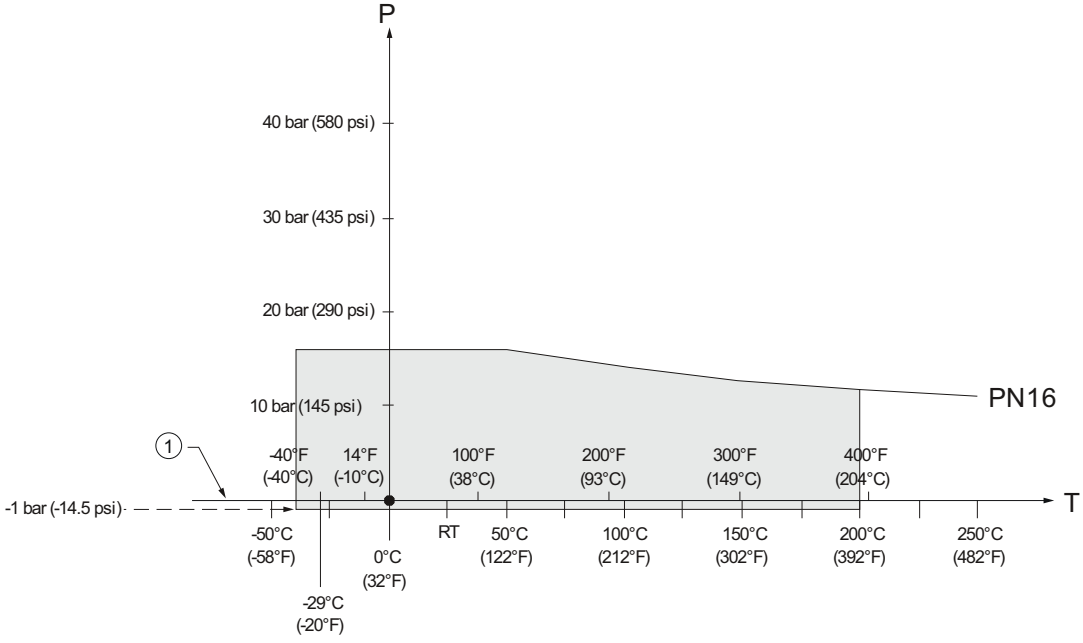

① Atmospheric
P Allowable operating pressures
T Allowable operating temperatures

EN1092-1, PN40: DN50, DN80, DN100, and DN150

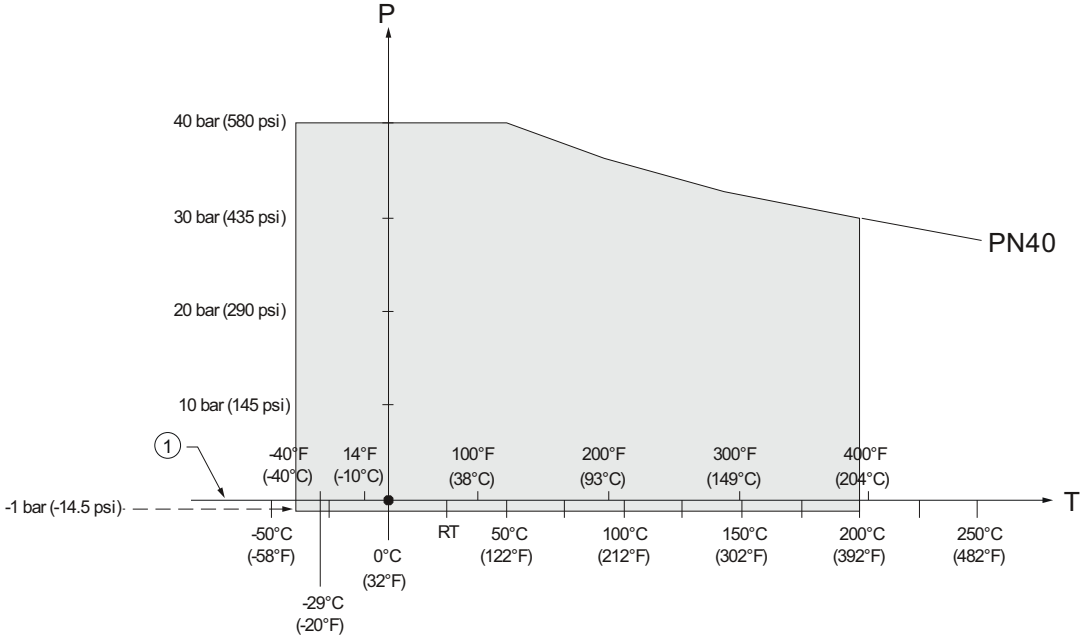

① Atmospheric
P Allowable operating pressures
T Allowable operating temperatures

ASME B16.5, Class 150: 2", 3", and 4" NPS

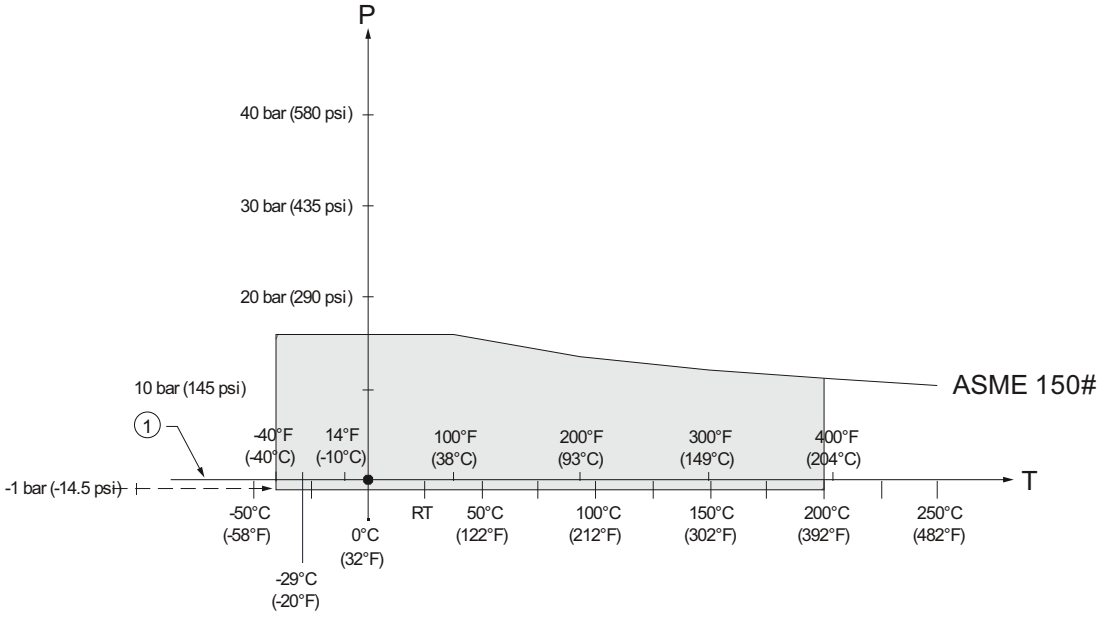

① Atmospheric
P Allowable operating pressures
T Allowable operating temperatures

ASME B16.5, Class 300: 2", 3", and 4" NPS

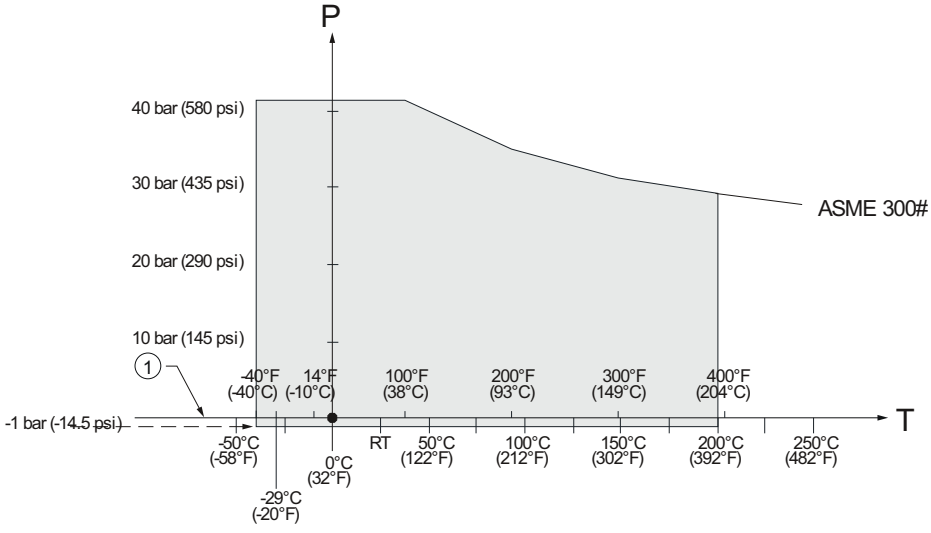

① Atmospheric
P Allowable operating pressures
T Allowable operating temperatures

A.5.4 PTFE flanged encapsulated antenna

ASME B16.5, Class 150: 2", 3", 4", and 6" NPS

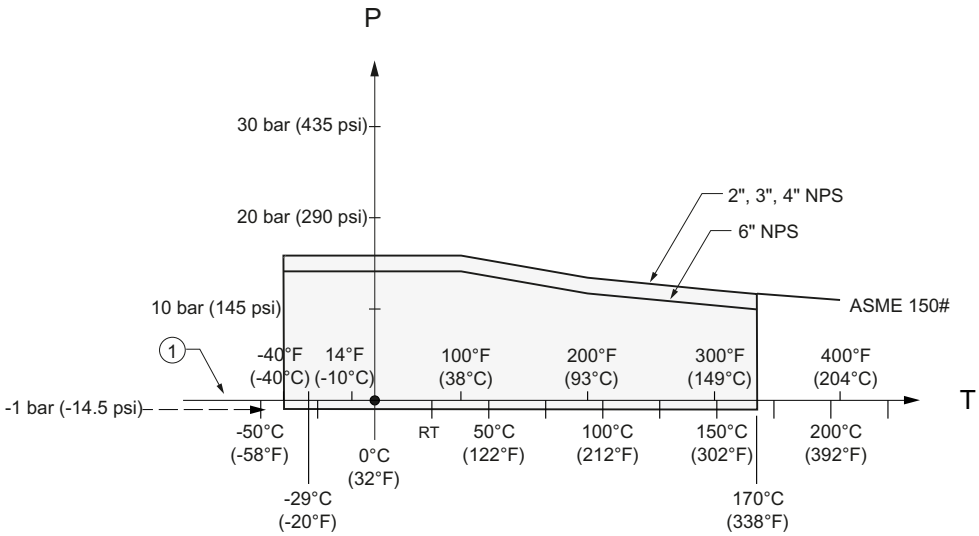

① Atmospheric

P Allowable operating pressures

T Allowable operating temperatures

JIS B 2220, 10K: 50A, 80A, 100A, and 150A

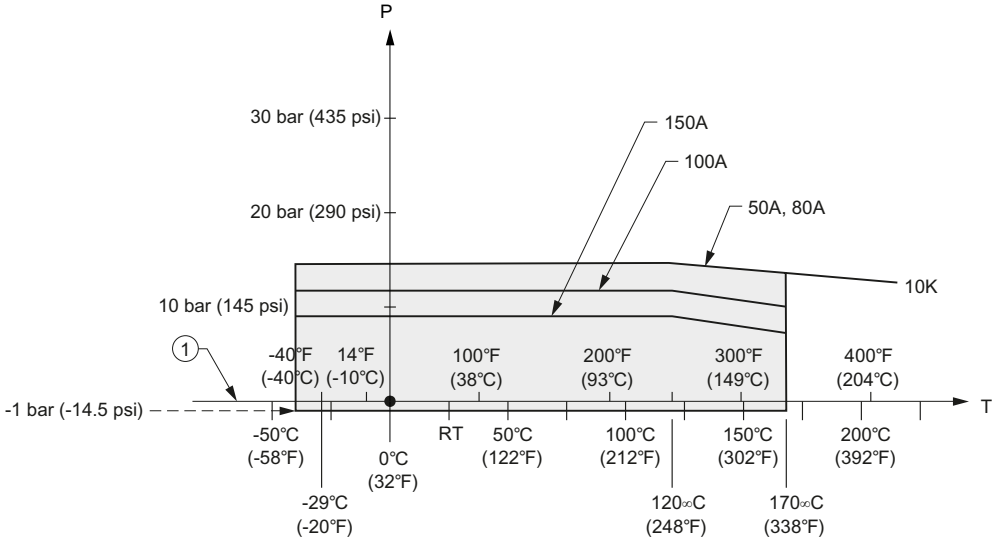

① Atmospheric

P Allowable operating pressures

T Allowable operating temperatures

EN1092-1, PN10/16: DN50, DN80, DN100, and DN150

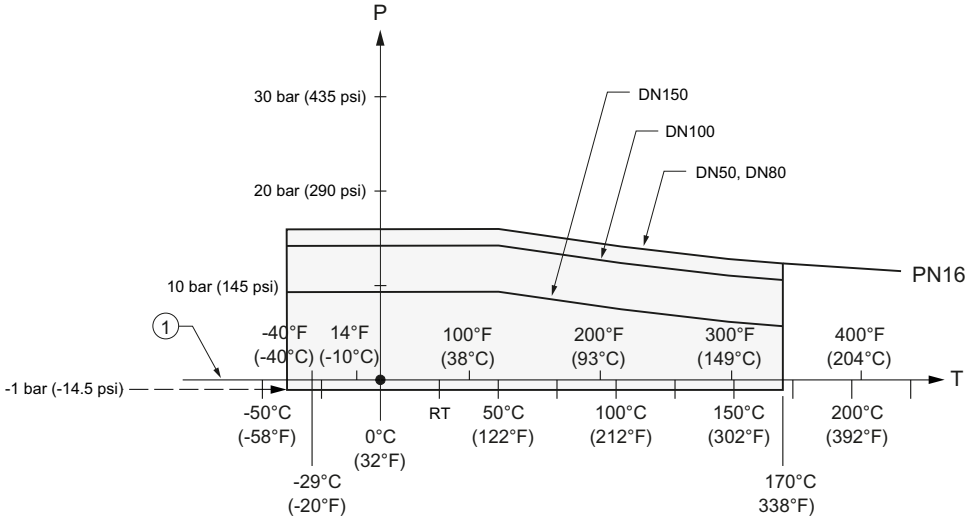

①	Atmospheric
P	Allowable operating pressures
T	Allowable operating temperatures

A.5.5 Aluminum horn, with polypropylene lens antenna version with polypropylene flange

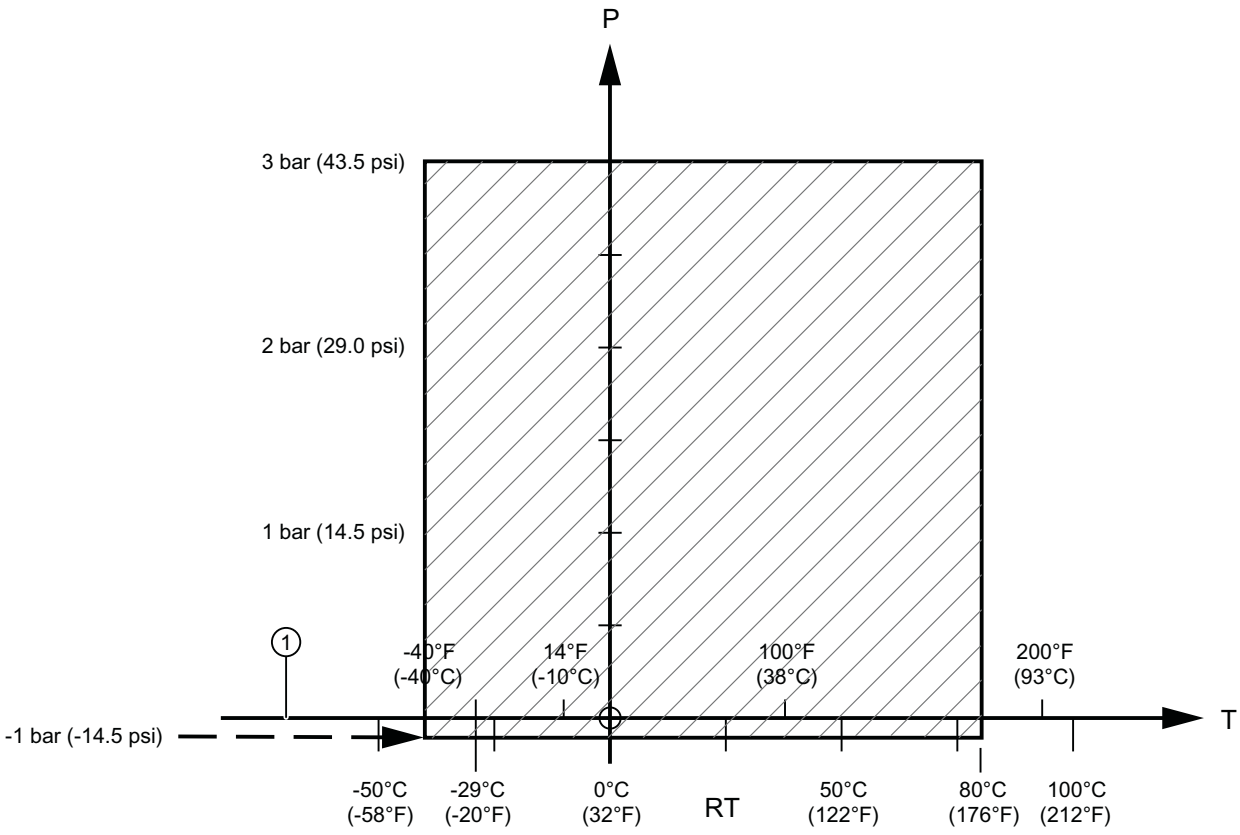

①	Atmospheric
P	Allowable operating pressures
T	Allowable operating temperatures

A.5.6 PVDF antenna

ASME B1.20.1 2" NPT, EN ISO 228-1 2" G (BSPP), EN 10226-1 2" R (BSPT)

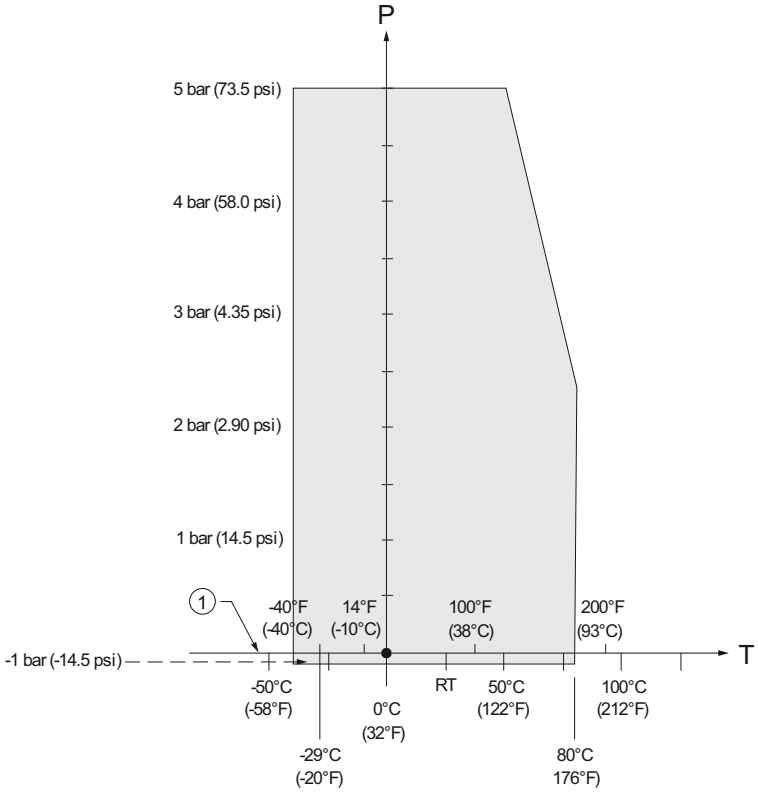

① Atmospheric
P Allowable operating pressures
T Allowable operating temperatures

A.5.7 Hygienic encapsulated antenna

DIN 11851 Sanitary/Hygienic nozzle/slotted nut: DN50, DN80, and DN100

DIN 11864-1 Aseptic/Hygienic nozzle/slotted nut: DN50, DN80, and DN100

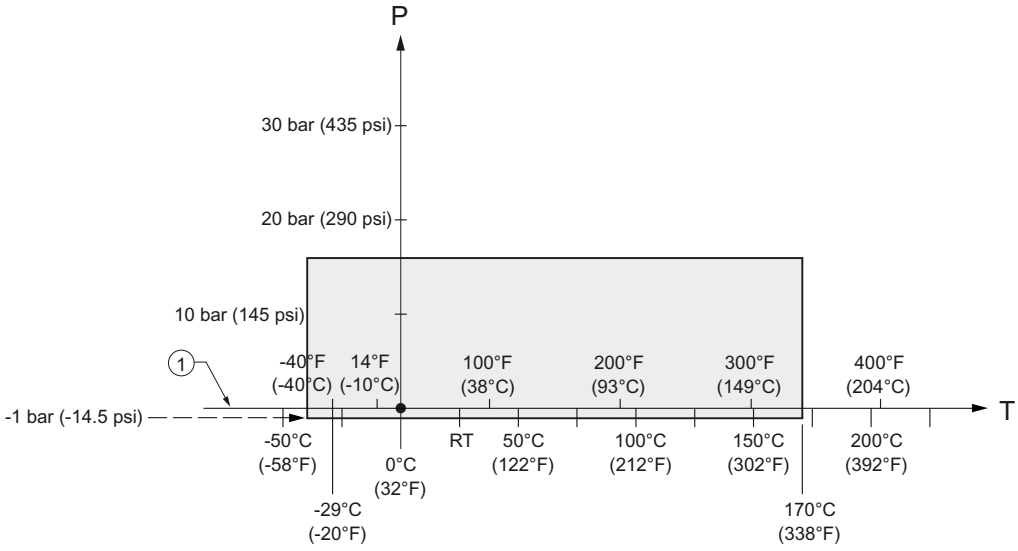

① Atmospheric
P Allowable operating pressures
T Allowable operating temperatures

DIN 11864-2 Aseptic/Hygienic flanged: DN50, DN80, and DN100

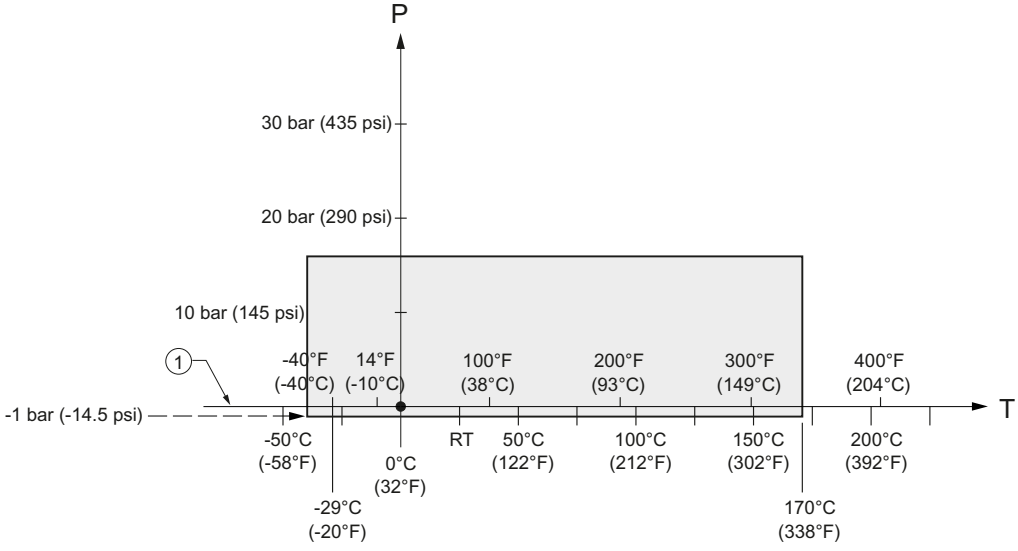

① Atmospheric
P Allowable operating pressures
T Allowable operating temperatures

Note

For pressure applications, all attachment hardware must be suitably rated.

DIN 11864-3 Aseptic/Hygienic clamp: DN50, DN80, and DN100

IS0 2852 Sanitary/Hygienic clamp: 2", 3", and 4"

Tuchenhagen Varivent face seal clamp: Type N (68 mm) and Type F (50 mm)

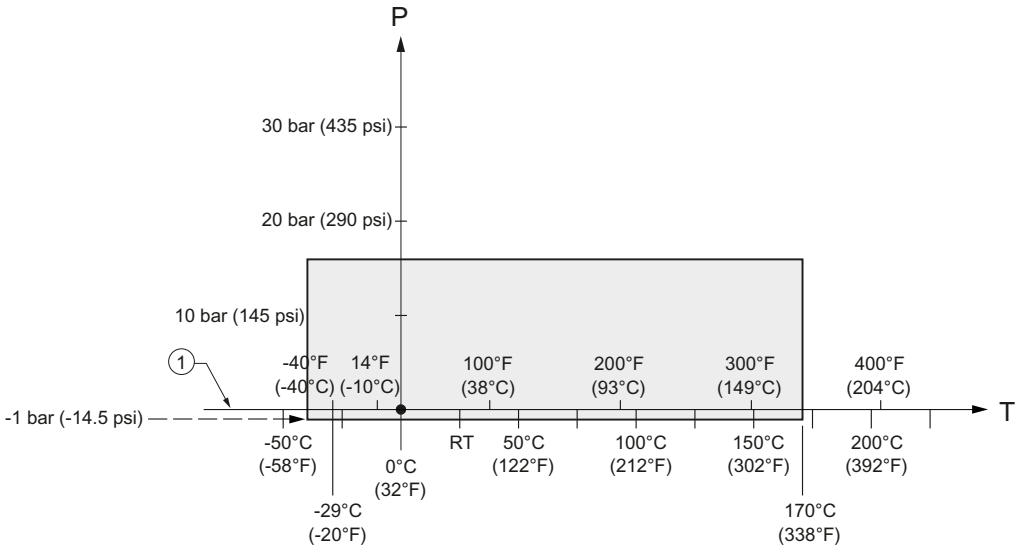

① Atmospheric
P Allowable operating pressures
T Allowable operating temperatures

Note

For pressure applications, all clamps must be rated accordingly.

A.6 Loop power

Note

Loop voltage is the voltage at the terminals of the power supply (not the voltage at the terminals of the device).

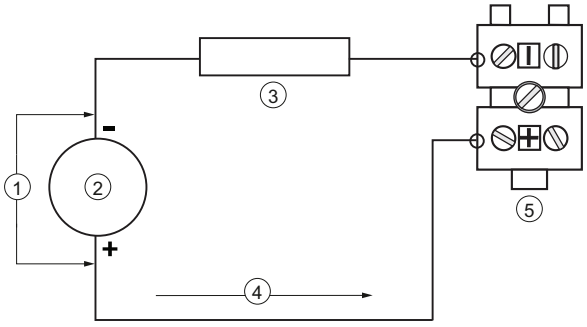

① Loop voltage VL
② Power supply
③ Loop resistance RL
④ Loop current IL
⑤ LR250

A.6.1 Allowable operating area of SITRANS LR250

Note

The curves below apply to a standalone device, configured via the Siemens handheld programmer.

A.6.2 Curve 1 (General Purpose, Intrinsically Safe, Non-Sparking, Non-incendive)

Loop Voltage versus Loop Resistance

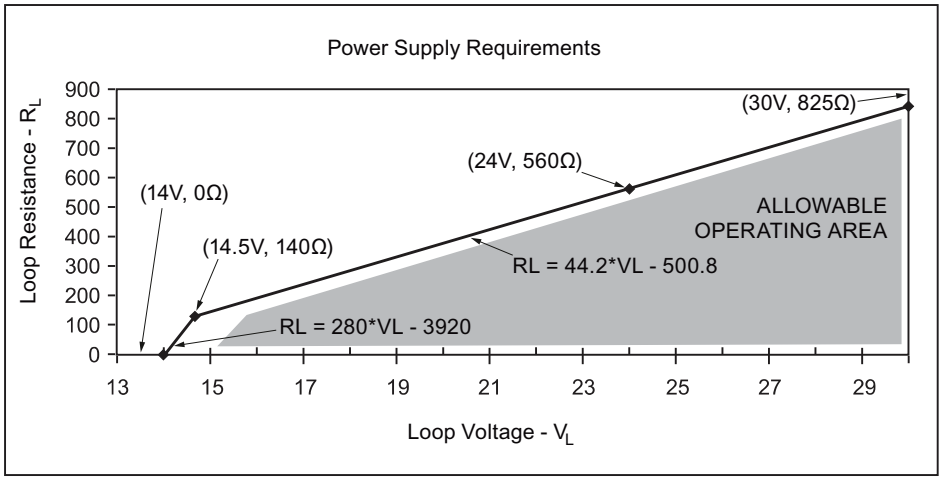

Note

When using HART communications, the minimum voltage with 220 Ohms (RL) is 16.3 V DC.

A.6.3 Curve 2 (Flameproof, Increased Safety, Explosion-proof)

Loop Voltage versus Loop Resistance

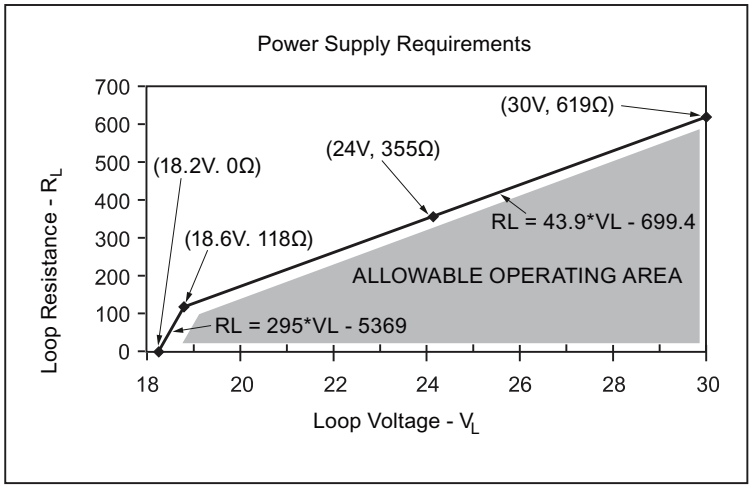

Note

When using HART communications, the minimum voltage with 220 Ohms (RL) is 20.94 V DC.

A.7 Startup behavior

- The device draws less than 3.6 mA at startup.
- Time to first measurement is less than 50 seconds.

Appendix B: HART communications

B

Highway Addressable Remote Transducer, HART, is an industrial protocol that is superimposed on the 4-20 mA signal. It is an open standard, and full details about HART can be obtained from the HART Communication Foundation website:

HART Communication Foundation (http://www.hartcomm.org/)

The radar device can be configured over the HART network using either the HART Communicator 375 by Fisher-Rosemount, or a software package. The recommended software package is the SIMATIC Process Device Manager (PDM) by Siemens.

B.1 SIMATIC PDM

This software package is designed to permit easy configuration, monitoring, and troubleshooting of HART devices. The HART EDD for this device was written with SIMATIC PDM in mind and has been extensively tested with this software. For more information, see Operating via SIMATIC PDM (Page 63).

B.2 HART Electronic Device Description (EDD)

In order to configure a HART device, the configuration software requires the HART Electronic Device Description for the instrument in question.

You can download the HART EDD for this device from our website:

Product page (http://www.siemens.com/LR250)

Click on **Support>Software Downloads.** Older versions of the library will have to be updated in order to use all the features of this device.

B.3 HART Handheld 375/475

If the SITRANS LR250 HART device revision is higher than revision 2, the FC375 will report that the Device Description is not installed and will ask whether you wish to proceed in forward compatibility mode. It is recommended to choose YES in order to use revision 3 with the FC375.

B.4 HART Communicator 375 menu structure

Note

HART Communicator 375 is supported by SITRANS LR250 HART.

LEVEL METER

1. IDENTIFICATION
    1. TAG
    2. DESCRIPTION
    3. MESSAGE
    4. INSTALLATION DATE
    5. DEVICE ORDER NUMBER
2. SETUP
    1. DEVICE
        1. FIRMWARE REVISION
        2. LOADER REVISION
        3. HARDWARE REVISION
    2. INPUT
        1. SENSOR CALIBRATION
            1. MATERIAL
            2. SENSOR UNITS
            3. OPERATION
            4. LOW CALIBRATION PT.
            5. HIGH CALIBRATION PT.
            6. NEAR RANGE
            7. FAR RANGE
            8. PROPAG. FACTOR
            9. SENSOR OFFSET
        2. VOLUME CONVERSION
            1. VESSEL SHAPE
            2. MAXIMUM VOLUME
            3. DIMENSION A
            4. DIMENSION L
        3. VOLUME BREAKPOINT
            1. TABLE 1 - 8 (Lev./Vol. Breakpoints 1-8)
            2. TABLE 9 - 16 (Lev./Vol. Breakpoints 9-16)
            3. TABLE 17 - 24 (Lev./Vol. Breakpoints 17-24)
            4. TABLE 25 - 32 (Lev./Vol. Breakpoints 25-32)
        4. ECHO PROCESSING
            1. ECHO SELECT
                1. ALGORITHM
                2. POSITION DETECT
                3. ECHO THRESHOLD
            2. SAMPLING
                1. ECHO LOCK
                2. SAMPLING UP
                3. SAMPLING DOWN
            3. FILTERING
                1. DAMPING FILTER
            4. TANK BOTTOM ALGORITHM
                1. CLEF RANGE
            5. NOISE
                1. ECHO CONFIDENCE
                2. ECHO STRENGTH
                3. NOISE AVERAGE

5. TVT SETUP
    1. TVT HOVER LEVEL
    2. AUTO FALSE ECHO SUPPRESSION
    3. AUTO SUPPRESSION RANGE
    4. SHAPER MODE
6. TVT SHAPER
    1. SHAPER 1-9 (Shaper points 1-9)
    2. SHAPER 10-18 (Shaper points 10-18)
    3. SHAPER 19-27 (Shaper points 19-27)
    4. SHAPER 28-36 (Shaper points 28-36)
    5. SHAPER 37-40 (Shaper points 37-40)
7. RATE
    1. RESPONSE RATE
    2. FILL RATE PER MINUTE
    3. EMPTY RATE PER MINUTE

3. OUTPUT
1. MA OUTPUT
    1. MA OUTPUT FUNCTION
    2. 4 MA SETPOINT
    3. 20 MA SETPOINT
    4. MINIMUM MA LIMIT
    5. MAXIMUM MA LIMIT

4. FAIL-SAFE
1. FAILSAFE TIMER
2. FAILSAFE MATERIAL LEVEL
3. FAILSAFE LEVEL

3. DIAGNOSTICS
1. MEASURED VALUES
    1. CURRENT INTERNAL TEMP.
    2. MAX. INTERNAL TEMP.
    3. MIN. INTERNAL TEMP.

4. SERVICE
1. REMAINING DEVICE LIFETIME
    1. TOTAL EXPECTED DEVICE LIFE
    2. TOTAL DEVICE OPERATING TIME
    3. REMAINING DEVICE LIFETIME
    4. MAINTENANCE REQUIRED LIFETIME
    5. MAINTENANCE DEMANDED LIFETIME
    6. MAINTENANCE ALERT ACTIVATION
    7. DEVICE LIFETIME MAINTENANCE ACKNOWLEDGE
2. REMAINING SENSOR LIFETIME
    1. TOTAL EXPECTED SENSOR LIFE
    2. TOTAL SENSOR OPERATING TIME
    3. REMAINING SENSOR LIFETIME
    4. MAINTENANCE REQUIRED LIMIT
    5. MAINTENANCE DEMANDED LIMIT
    6. MAINTENANCE ALERT ACTIVATION
    7. SENSOR LIFETIME MAINTENANCE ACKOWLEDGE

3. SERVICE INTERVAL
    1. TOTAL SERVICE INTERVAL
    2. TIME ELAPSED SINCE LAST SERVICE
    3. REMAINING LIFETIME
    4. MAINTENANCE REQUIRED LIMIT
    5. MAINTENANCE DEMANDED LIMIT
    6. MAINTENANCE ALERT ACTIVATION
    7. SERVICE ACKNOWLEDGE
4. CALIBRATION INTERVAL
    1. TOTAL CALIBRATION INTERVAL
    2. TIME ELAPSED SINCE LAST CALIBRATION
    3. REMAINING LIFETIME
    4. MAINTENANCE REQUIRED LIMIT
    5. MAINTENANCE DEMANDED LIMIT
    6. MAINTENANCE ALERT ACTIVATION
    7. CALIBRATION ACKNOWLEDGE
5. POWERED DAYS
6. POWER ON RESETS
7. LCD FAST MODE
8. LCD CONTRAST

5. COMMUNICATION
    1. COMMUNICATION CONTROL
6. SECURITY
    1. WRITE PROTECT
    2. PIN TO UNLOCK
7. LANGUAGE
    1. LANGUAGE

B.5 HART version

SITRANS LR250 conforms to HART rev. 5.

B.5.1 Burst Mode

SITRANS LR250 does not support burst mode.

Appendix C: Certificates and support

C

C.1 Technical support

Technical support

If this documentation does not provide complete answers to any technical questions you may have, contact Technical Support at:

- Support request (http://www.siemens.com/automation/support-request)
- More information about our Technical Support is available at Technical Support (http://www.siemens.com/automation/csi/service)

Internet Service & Support

In addition to our documentation, Siemens provides a comprehensive support solution at:

- Services & Support (http://www.siemens.com/automation/service&support)

Personal contact

If you have additional questions about the device, please contact your Siemens personal contact at:

- Partner (http://www.automation.siemens.com/partner)

To find the personal contact for your product, go to "All Products and Branches" and select "Products & Services > Industrial Automation > Process Instrumentation".

Registered business address: Siemens AG, DE-76181, Karlsruhe, Germany

Documentation

You can find documentation on various products and systems at:

- Instructions and manuals (http://www.siemens.com/processinstrumentation/documentation)

C.2 Certificates

You can find certificates on the Internet at Product page (http://www.siemens.com/LR250) or on an included DVD.

List of abbreviations

13

Short form	Long form	Description	Units
3-A	3-A Sanitary Standards, Inc.		
CE / FM / CSA	Conformité Européene / Factory Mutual / Canadian Standards Association	safety approval	
C_i	Internal capacitance		F
D/A	Dialog to analog		
DCS	Distributed Control System	control room apparatus	
dK	dielectric constant		
EDD	Electronic Device Description		
EHEDG	European Hygienic Engineering Design Group		
FEA	Flanged encapsulated antenna		
FDA	Food and Drug Administration		
HEA	Hygienic Encapsulated Antenna		
HART	Highway Addressable Remote Transducer		
I_i	Input current		mA
I_o	Output current		mA
IS	Intrinsically Safe	safety approval	
L_i	Internal inductance		mH
mH	milliHenry	10^{-3}	H
µF	microFarad	10^{-6}	F
µs	microsecond	10^{-6}	s
NPS	Nominal Pipe Size		
PED	Pressure Equipment Directive	safety approval	
pF	pico Farads	10^{-12}	F
ppm	parts per million		
PV	Primary Variable	measured value	
PVDF	Polyvinylidene fluoride		
SV	Secondary Variable	equivalent value	
TB	Transducer Block		
TVT	Time Varying Threshold	sensitivity threshold	
TFM1600 PTFE	Modified PTFE	polytetrafluoroethylene with perfluoropropyl vinyl ether (PPVE) modifier	
U_i	Input voltage		V
U_o	Output voltage		V

LCD menu structure

14

14.1 LCD menu structure

Note

- In Navigation mode, **ARROW keys** (◄ ▲ ► ▼) navigate the menu in the direction of the arrow. See Parameter Reference (Page 107) for detailed information and instructions.

LEVEL METER

- 1. QUICK START WIZ
  - 1.1 QUICK START
    - MATERIAL
    - RESPONSE RATE
    - UNITS
    - OPERATION
    - LOW CALIB. PT.
    - HIGH CALIB. PT.
    - WIZARD COMPLETE
- 1. SETUP
  - 2.1 DEVICE
    - 2.1.1 HARDWARE REV
    - 2.1.2 FIRMWARE REV
    - 2.1.3 LOADER REV
    - 2.1.4 ORDER OPTION
  - 2.2 SENSOR
    - 2.2.1 UNITS
    - 2.2.2 SENSOR MODE
    - 2.2.3 MATERIAL
    - 2.2.4 DAMPING FILTER
  - 2.3 CALIBRATION
    - 2.3.1 LOW CALIB. PT.
    - 2.3.2 HIGH CALIB. PT.
    - 2.3.3 SENSOR OFFSET
  - 2.4 RATE
    - 2.4.1 RESPONSE RATE
    - 2.4.2 FILL RATE PER MINUTE
    - 2.4.3 EMPTY RATE PER MINUTE
  - 2.5 FAIL-SAFE
    - 2.5.1 MAT. LEV.
    - 2.5.2 LOE TIMER
    - 2.5.3 FAIL-SAFE MA VALUE
  - 2.6 ANALOG OUT. SCAL.
    - 2.6.1 CURR. OUT. FUNC.
    - 2.6.2 4 MA SETPOINT
    - 2.6.3 20 MA SETPOINT
    - 2.6.4 MIN. MA LIMIT
    - 2.6.5 MAX. MA LIMIT
    - 2.6.6 MA OUTPUT VALUE
  - 2.7 LINEARIZATION
    - 2.7.1 VOLUME
      - 2.7.1.1 VESSEL SHAPE
      - 2.7.1.2 MAX. VOLUME
      - 2.7.1.3 DIMENS. A
      - 2.7.1.4 DIMENS. L
    - 2.7.2 TABLE 1 - 8
    - 2.7.3 TABLE 9 - 16
    - 2.7.4 TABLE 17 - 24
    - 2.7.5 TABLE 25-32

- 2. SETUP (cont'd)
  - 2.8 SIGNAL PROC.
    - 2.8.1 NEAR RANGE
    - 2.8.2 FAR RANGE
    - 2.8.3 PROPAG. FACTOR
    - 2.8.4 ECHO SELECT
      - 2.8.4.1 ALGORITHM
      - 2.8.4.2 POS. DETECT
      - 2.8.4.3 ECHO THRESHOLD
      - 2.8.4.4 CLEF RANGE
    - 2.8.5 SAMPLING
      - 2.8.5.1 ECHO LOCK
      - 2.8.5.2 UP SAMP.
      - 2.8.5.3 DOWN SAMP.
    - 2.8.6 ECHO QUALITY
      - 2.8.6.1 CONFIDENCE
      - 2.8.6.2 ECHO STRENGTH
      - 2.8.6.3 NOISE AVERAGE
    - 2.8.7 TVT SETUP
      - 2.8.7.1 AUTO FALSE ECHO
      - 2.8.7.2 AUTO SUPP RANGE
      - 2.8.7.3 HOVER LEVEL
      - 2.8.7.4 SHAPER MODE
    - 2.8.8 TVT SHAPER
      - 2.8.8.1 BRKPT. 1-9
      - 2.8.8.2 BRKPT. 10-18
      - 2.8.8.3 BRKPT. 19-27
      - 2.8.8.4 BRKPT. 28-36
      - 2.8.8.5 BRKPT. 37-40
    - 2.8.9 MEAS. VALUES
      - 2.8.9.1 LEVEL MEAS.
      - 2.8.9.2 SPACE MEAS.
      - 2.8.9.3 DISTANCE MEAS.
      - 2.8.9.4 VOLUME MEAS.
- 3. DIAGNOSTICS
  - 3.1 ECHO PROFILE
  - 3.2 ELECT. TEMP.
    - 3.2.1 CURR. INTERN. TEMP..
    - 3.2.2 HIGHEST VALUE.
    - 3.2.3 LOWEST VALUE.
- 4. SERVICE
  - 4.1 MASTER RESET
  - 4.2 REMAIN. DEV. LIFE
    - 4.2.1 LIFETIME EXPECTE..
    - 4.2.2 TIME IN OPER..
    - 4.2.3 REMAIN. LIFETIM..
    - 4.2.4 REMINDER ACTIV.
    - 4.2.5 REMIND. 1 (REQ)
    - 4.2.6 REMIND. 2 (DEM)
    - 4.2.7 MAINT STAT
    - 4.2.8 ACK STATUS
    - 4.2.9 ACK
  - 4.3 REMAIN. SENS. LIFE
    - 4.3.1 LIFETIME EXPECTE..
    - 4.3.2 TIME IN OPER..
    - 4.3.3 REMAIN. LIFETIM..
    - 4.3.4 REMINDER ACTIV.
    - 4.3.5 REMIND. 1 (REQ)
    - 4.3.6 REMIND. 2 (DEM)
    - 4.3.7 MAINT STAT
    - 4.3.8 ACK STATUS
    - 4.3.9 ACK

- **4. SERVICE (cont'd)**
  - 4.4 SERVICE SCHED.
    - 4.4.1 SERV. INTERVAL
    - 4.4.2 TIME LAST SERV.
    - 4.4.3 TIME NEXT SERV.
    - 4.4.4 REMINDER ACTIV.
    - 4.4.5 REMIND. 1 (REQ)
    - 4.4.6 REMIND. 2 (DEM)
    - 4.4.7 MAINT STAT
    - 4.4.8 ACK STATUS
    - 4.4.9 ACK
  - 4.5 CALIB SCHED.
    - 4.5.1 CALIB. INTERNAL
    - 4.5.2 TIME LAST CALIB.
    - 4.5.3 TIME NEXT CALIB.
    - 4.5.4 REMINDER ACTIV.
    - 4.5.5 REMIND. 1 (REQ)
    - 4.5.6 REMIND. 2 (DEM)
    - 4.5.7 MAINT STAT
    - 4.5.8 ACK STATUS
    - 4.5.9 ACK
  - 4.6 MANUF. DATE
  - 4.7 POWERED HOURS
  - 4.8 POWERON RESETS
  - 4.9 LCD FAST MODE
  - 4.10 LCD CONTRAST
  - 4.11 SECONDARY VALUE
  - 4.12 MEM. TEST
- **5. COMMUNICATION**
  - 5.1 DEVICE ADDRESS
- **6. SECURITY**
  - 6.1 REMOTE ACCESS
    - 6.1.1 ACCESS CONTROL
  - 6.2 LOCAL ACCESS
    - 6.2.1 WRITE PROTECT
    - 6.2.2 PIN TO UNLOCK
- **7. LANGUAGE**

Glossary

accuracy

degree of conformity of a measure to a standard or a true value.

algorithm

a prescribed set of well-defined rules or processes for the solution of a problem in a finite number of steps.

ambient temperature

the temperature of the surrounding air that comes in contact with the enclosure of the device.

antenna

an aerial which sends out and receives a signal in a specific direction. There are four basic types of antenna in radar level measurement, horn, parabolic, rod, and waveguide.

attenuation

a term used to denote a decrease in signal magnitude in transmission from one point to another. Attenuation may be expressed as a scalar ratio of the input magnitude to the output magnitude or in decibels.

Auto False-Echo Suppression

a technique used to adjust the level of a TVT to avoid the reading of false echoes. (See TVT.)

Auto-False Echo Suppression Distance

defines the endpoint of the TVT distance. (See TVT.) This is used in conjunction with auto false echo suppression.

beam spreading

the divergence of a beam as it travels through a medium.

beam width

the angle diametrically subtended by the one-half power limits (-3 dB) of the microwave beam.

blanking

a blind zone extending away from the reference point plus any additional shield length.The device is programmed to ignore this zone.

capacitance

the property of a system of conductors and dielectrics that permits the storage of electricity when potential differences exist between the conductors. Its value is expressed as the ratio of a quantity of electricity to a potential difference, and the unit is a Farad.

confidence

see Echo Confidence.

damping

term applied to the performance of a device to denote the manner in which the measurement settles to its steady indication after a change in the value of the level.

dB (decibel)

a unit used to measure the amplitude of signals.

derating

to decrease a rating suitable for normal conditions according to guidelines specified for different conditions.

dielectric

a nonconductor of direct electric current. Many conductive liquids/electrolytes exhibit dielectric properties; the relative dielectric constant of water is 80.

dielectric constant (dK)

the ability of a dielectric to store electrical potential energy under the influence of an electric field. Also known as Relative Permittivity. An increase in the
dielectric constant is directly proportional to an increase in signal amplitude. The value is usually given relative to a vacuum /dry air: the dielectric constant of air is 1.

echo

a signal that has been reflected with sufficient magnitude and delay to be perceived in some manner as a signal distinct from that directly transmitted. Echoes are frequently measured in decibels relative to the directly transmitted signal.

Echo Confidence

describes the quality of an echo. Higher values represent higher quality. Echo Threshold defines the minimum value required for an echo to be accepted as valid and evaluated.

Echo Lock Window

a window centered on an echo in order to locate and display the echo's position and true reading. Echoes outside the window are not immediately processed.

Echo Marker

a marker that points to the processed echo.

Echo Processing

the process by which the radar unit determines echoes.

Echo Profile

a graphical display of a processed echo.

Echo Strength

describes the strength of the selected echo in dB referred to 1 µV rms.

false Echo

any echo which is not the echo from the desired target. Generally, false echoes are created by vessel obstructions.

frequency

the number of periods occurring per unit time. Frequency may be stated in cycles per second.

HART

Highway **A**ddressable **R**emote **T**ransducer. An open communication protocol used to address field instruments.

Hertz (Hz):

unit of frequency, one cycle per second. 1 Gigahertz (GHz) is equal to 10^9 Hz.

horn antenna

a conical, horn-shaped antenna which focuses microwave signals. The larger the horn diameter, the more focused the radar beam.

inductance

the property of an electric circuit by virtue of which a varying current induces an electromotive force in that circuit or in a neighboring circuit. The unit is a Henry.

microwaves

the term for the electromagnetic frequencies occupying the portion of the radio frequency spectrum from 1 GHz to 300 GHz.

multiple echoes

secondary echoes that appear as double, triple, or quadruple echoes in the distance from the target echo.

Near Blanking

see Blanking.

nozzle

a length of pipe mounted onto a vessel that supports the flange.

parameters

in programming, variables that are given constant values for specific purposes or processes.

polarization

the property of a radiated electromagnetic wave describing the time-varying direction and amplitude of the electric field vector.

polarization error

the error arising from the transmission or reception of an electromagnetic wave having a polarization other than that intended for the system.

propagation factor (pf)

where the maximum velocity is 1.0, pf is a value that represents a reduction in propagation velocity as a result of the wave travelling through a pipe or
medium.

pulse radar

a radar type that directly measures distance using short microwave pulses. Distance is determined by the return transit time.

radar

radar is an acronym for **RA**dio **D**etection **A**nd **R**anging. A device that radiates electromagnetic waves and utilizes the reflection of such waves from distant objects to determine their existence or position.

range

distance between a transmitter and a target.

range extension

the distance below the zero percent or empty point in a vessel.

relative humidity

the ratio of the actual amount of moisture in the atmosphere to the maximum amount of moisture the atmosphere could hold (which varies depending on the air temperature).

relative permittivity

see dielectric constant.

repeatability

the closeness of agreement among repeated measurements of the same variable under the same conditions.

sensor value

the value produced by the echo processing which represents the distance from sensor reference point to the target. (see **Sensor Mode (2.2.2.)** for an illustration).

shot

one transmit pulse or measurement.

speed of light

the speed of electromagnetic waves (including microwave and light) in free space. Light speed is a constant 299, 792, 458 meters per second.

stilling-well

see stillpipe.

stillpipe

a pipe that is mounted inside a vessel parallel to the vessel wall, and is open to the vessel at the bottom.

TVT (Time Varying Threshold)

a time-varying curve that determines the threshold level above which echoes are determined to be valid.

two wire radar

a low-energy radar. Can be loop powered, analog, intrinsically safe 4 to 20 mA, or a digital (BUS) transmitter.

waveguide antenna

a hollow, metallic tube that transmits a microwave signal to the product target.

Index

A

Abbreviations and identifications list, 253
access control
    remote access, 147
activating, 46
agitator blade detection
    avoiding, 124
AMS Device Manager
    features, 84
analog output
    explanation, 230
    fail signal, 167
    select, 78
    signal range, 167
    simulate via PDM, 78
analog output scale
    setup, 114
antenna
    replacement, 155
antenna types
    flanged encapsulated antenna, 190, 192
    flanged horn antenna, 186
    flanged horn antenna with extension, 189
    threaded horn, 181
    threaded PVDF antenna, 211
Auto False Echo Suppression
    explanation, 228
    setup, 126
    TVT Shaper adjustment, 73
    via PDM, 72, 74

B

beam angle
    flanged encapsulated antenna, 190, 192
    flanged horn, 186, 189
    threaded horn, 182, 185
    threaded PVDF antenna, 211
blanking (see Near Range), 229
bolting instructions, 33
bypass pipe
    see stillpipe, 29

C

cables
    requirements, 38
Calibration Interval, 143
calibration schedules via PDM, 77
Certificates, 251
cleaning
    instructions, 153
CLEF (Constrained Leading Edge Fit)
    explanation, 225
CLEF range
    setup, 123
communication
    load, 167
    maximum line length, 167
Compact Operating Instructions, 251
conduits
    requirements, 37
configuration
    new device via AMS, 85
    Quick Start via LUI, 53
configuration flag reset, 78
Customer Support, (Refer to Technical support)

D

Damping
    explanation, 230
Damping filter
    setup, 110
data logging
    time-based echo profile storage, 73
Device Address, 147
Device Description (DD)
    see EDD, 65
Device Reset
    see Master Reset, 131
device status
    view via PDM, 82
Diagnostics, 130
dimensions
    flanged encapsulated antenna, 190, 192
    flanged horn, 186, 189
    flat face flange, 218
    raised face flange, 213, 214, 216

threaded horn with extension, 182, 185
threaded PVDF antenna, 211
Disassembly, 35
Disposal, 157
Documentation, 251

E

echo confidence
parameter setup, 125
echo processing
Process Intelligence, 223
Echo Profile
data logging, 73
view via LUI, 56
view via PDM, 72
Echo Profile Utilities
Auto False Echo Suppression, 71
Echo Profile, 71
TVT Shaper, 71
echo selection
Algorithm, 225
CLEF (Constrained Leading Edge Fit), 225
Position algorithm, 225
time varying threshold (TVT), 224
Echo Setup
quick access via PDM, 76
EDD
updating, 65
Edit mode
handheld programmer, 50
key functions, 52
Electronic Device Description (EDD), 64
required for PROFIBUS PA, 65
updating, 65
enclosure
opening, 38

F

factory defaults
Master Reset, 131
Fail-safe
settings, 112
Fail-safe Mode
explanation, 232
Fail-safe Timer
explanation, 232
false echo
see Auto False Echo Suppression, 228
Far Range
explanation, 229
setup, 121
flange
bolting instructions, 33
flange markings
flat face, 218
raised face, 214, 216
flange sizes
flat face, 218
raised face, 213, 214, 216
flanged encapsulated antenna
dimensions, 192
flanged horn
dimensions, 186, 189

H

Handheld programmer
edit mode, 51
navigation, 51
HART Communication
set preambles, 79
HART Communications
details, 247
HART version, 250
Hazardous area
Qualified personnel, 17
hazardous area installations
wiring requirements, 39
Hotline, (Refer to Support request)

I

Identifications and abbreviations
list, 253
installation
hazardous area requirements, 39
requirements, 31
warnings and notes, 31
Instructions and manuals, 251
internal temperature
monitoring, 233

K

Key functions
edit mode, 52
navigation mode, 51

L

Language, 148
LCD display
    contrast adjustment, 146
    echo profile viewing, 56
    fast mode, 145
    measurement mode, 47
lens
    replacement, 155
lid-lock set screw, 38
linearization via AMS, 88
Lithium batteries
    Safety, 45
Local User Interface (LUI), 47
LOE
    Fail-safe Mode, 232
loop test
    simulate analog output, 78
loop voltage vs. loop resistance
    power supply requirements, 40
loss of echo (LOE)
    explanation, 232
LUI (Local User Interface)
    contrast adjustment, 47

M

mA output
    select analog output, 78
maintenance,
    calibration schedules, 77
    repairs, 153
    replacing antenna, 155
    replacing lens, 155
    service schedules, 77
maintenance settings, 130
    Calibration Interval, 143
    see Remaining Sensor Lifetime, 137
    Service Interval, 139
Manuals, 251
Master Reset
    factory defaults, 131
    factory defaults via AMS, 85
measurement range
    blanking via Near Range, 229
    extension via Far Range, 229
Measurement Response
    explanation, 229
Modifications
    correct usage, 17
    improper, 17
mounting
    bypass requirements, 29
    handheld programmer access, 28
    housing construction, 24, 29
    nozzle design, 26
    nozzle location, 26
    on vessel with obstructions, 29
    sunshield recommended, 29

N

Namur NE43, 113, 232
Near Range
    explanation, 229
    setup, 121

O

Operating Instructions, 251
operating principles
    cleaning, 223
overview, 19

P

password protection
    via AMS, 98
    via PDM, 82
PDM
    see SIMATIC PDM, 63
PED (Pressure Equipment Directive), 23, 235
performance
    specifications, 165
PIN to unlock
    local access, 147
pipe sizes, 214
    flange mounting, 213, 216
polarization reference point, 29
power, 165
power source
    requirements, 37
power supply requirements
    loop voltage vs. loop resistance, 40
pressure applications, 23
    Pressure Equipment Directive, 23, 235
Process Intelligence, 223
process temperature
    maximum, 233

programmer
handheld, 49
programming
adjust parameters via PDM, 70
via the handheld programmer, 50
propogation factor
values, 121

Q

Qualified personnel, 17
Quick Start Wizard
via LUI, 53
via SIMATIC PDM, 66

R

raised face flange markings, 213, 215
reading erratic
troubleshooting, 164
reading incorrect
troubleshooting, 164
repair
cautions, 155
excluded liability, 155
reset
see Master Reset, 131
Response Rate
explanation, 229
Return procedure, 157

S

Scan device
synchronize parameters via AMS, 86
Scope of delivery, 11
security
local access, 147
local access control via AMS, 96
local access unlock value, 148
password protection via AMS, 98
remote access control, 147
remote access control via AMS, 96
self-test
device self-test via PDM, 78
sensor reference point
flanged encapsulated antenna, 190, 192
flanged horn, 186, 189
flat faced flange, 218
raised face flange, 213, 215
threaded horn, 182, 185
threaded PVDF horn, 211
Service, 251
Service & Support, 251
Internet, 251
service schedules via PDM, 77
settings
adjust parameters via PDM, 70
sidepipe
see bypass pipe, 29
SIMATIC PDM
functions and features, 63
Rev 5.2, SP1 features, 64
Rev 6.0, SP4 features, 63
simulate analog output
loop test, 78
SITRANS LR250
operating principles, 223
startup
transition screen, 46
stillpipe
mounting requirements, 29, 30
Support, 251
Support request, 251
synchronize parameters
scan device via AMS, 86

T

technical data,
ambient temperature, 170
environmental, 170
performance, 165
power, 165
pressure, 171
process connections enclosure, 168
process temperature, 171
weight, 169
technical data"; process connection"; "transmitter housing, 168
Technical support, 251
Partner, 251
Personal contact, 251
test
loop test, 78
threaded connection markings, 212
threaded horn antenna
dimensions, 182, 185
threaded PVDF antenna
dimensions, 211
trend
view trend line, 80

troubleshooting
    communication, 159
    operation, 163
TVT (time varying threshold)
    explanation, 224
TVT Shaper
    manual adjustment via PDM, 73
    via PDM, 71

U

unlock value
    local access, 147

V

vessel shape
    selection, 116

W

Warranty, 12
Wear
    powered hours, 79
    poweron resets, 79
    view via PDM, 79
wiring
    cables, 38
    connecting HART, 39
    hazardous areas, 39
write protect
    local access, 148