EXHIBIT E

Block Diagram

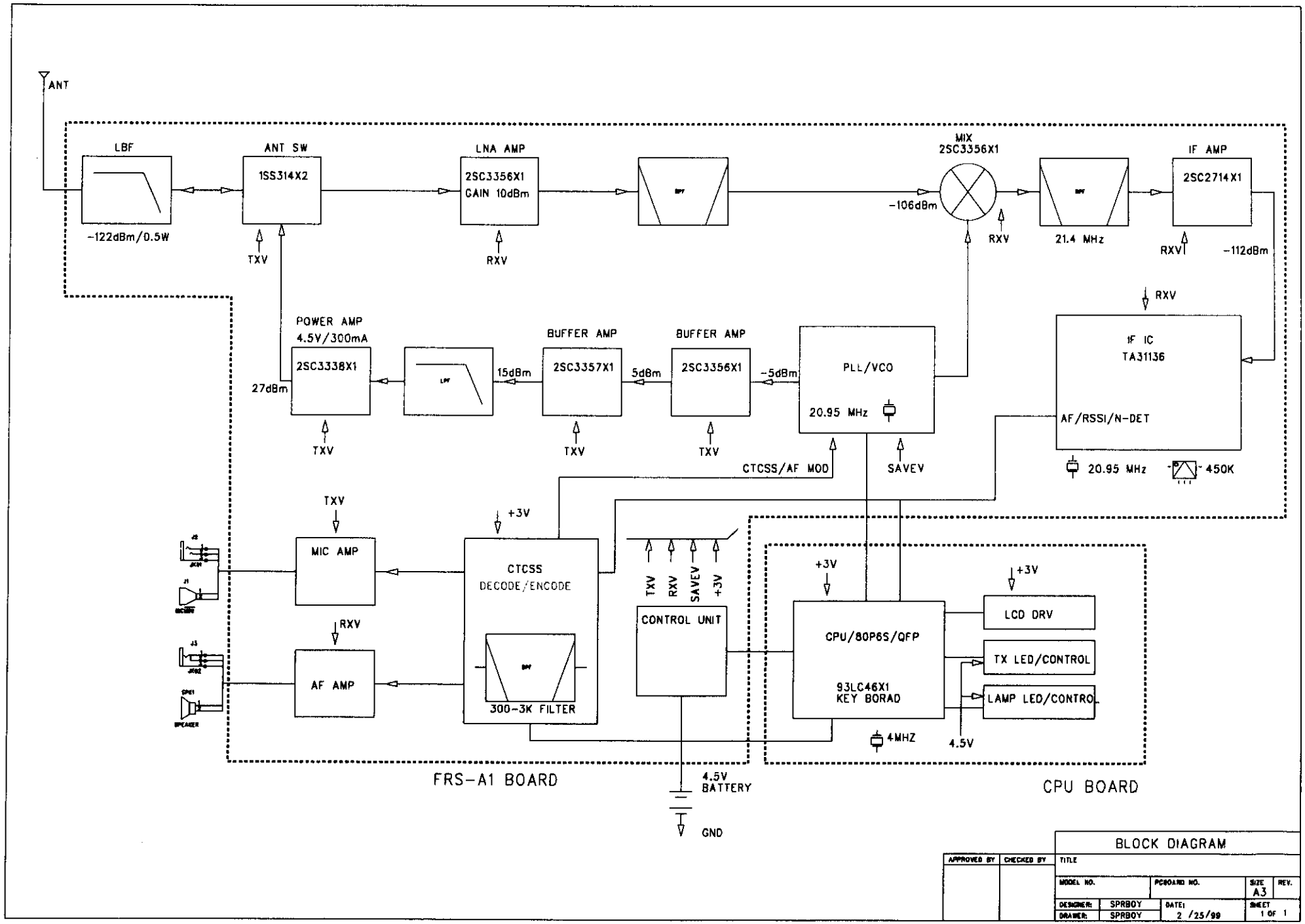
ANT
LBF
-122dBm/0.5W
ANT SW
1SS314X2
TXV
LNA AMP
2SC3356X1
GAIN 10dBm
RXV
MIX
2SC3356X1
-106dBm
RXV
21.4 MHz
IF AMP
2SC2714X1
RXV
-112dBm
RXV
IF IC
TA31136
AF/RSSI/N-DET
20.95 MHz
450K
POWER AMP
4.5V/300mA
2SC3338X1
27dBm
TXV
15dBm
BUFFER AMP
2SC3357X1
TXV
5dBm
BUFFER AMP
2SC3356X1
TXV
-5dBm
PLL/VCO
20.95 MHz
CTCSS/AF MOD
SAVEV
TXV
MIC AMP
+3V
CTCSS
DECODE/ENCODE
300-3K FILTER
RXV
AF AMP
TXV
RXV
SAVEV
+3V
CONTROL UNIT
+3V
CPU/80P6S/QFP
93LC46X1
KEY BORAD
4MHZ
4.5V
+3V
LCD DRV
TX LED/CONTROL
LAMP LED/CONTROL
FRS-A1 BOARD
4.5V
BATTERY
GND
CPU BOARD
BLOCK DIAGRAM
APPROVED BY
CHECKED BY
TITLE
MODEL NO.
PCBOARD NO.
SIZE
A3
REV.
DESIGNER: SPRBOY
DRAWER: SPRBOY
DATE: 2 /25/99
SHEET 1 OF 1

EXHIBIT F

Photographs of EUT