Exhibit C
User Manual

Arena Indy 2200

19" Rackmount

Ultra 160 SCSI to IDE
Disk Array System

User's Guide

Version 2.20A
Jan. 2002

ID-2200

19" Rackmount

Ultra 160 SCSI to IDE
Disk Array System

User's Guide

Version 2.20A
Jan. 2002

Copyright Notice

© 2002 MaxTronic International Co., Ltd. All rights reserved.
No part of this written material may be reproduced, stored in a retrieval system, used in any form or by any means, electronic or mechanical, photocopying, recording, or otherwise, without the written permission of MaxTronic International CO., LTD.

Warning and Certifications

FCC (applies in the U.S. and Canada)

This equipment has been tested and found to comply with the limits for a Class B digital device, pursuant to Part 15 of the FCC Rules. These limits are designed to provide reasonable protection against harmful interference when the equipment is operated in a residential installation. This equipment generates, uses, and can radiate radio frequency energy and, if not installed and used in accordance with this user's guide, may cause harmful interference to radio communications. However, there is no guarantee that interference will not occur in a particular installation. If this equipment does cause harmful interference to radio or television reception, which can be determined by turning the equipment off and on, the user is encouraged to try to correct the interference by one or more of the following measures:

* Reorient or relocate the receiving antenna.
* Increase the separation between the equipment and receiver.
* Connect the equipment into an outlet on a circuit different from that to which the receiver is connected.
* Consult the dealer or an experienced radio/TV technician for help.

This device complies with Part 15 of FCC Rules. Operation is subjected to the following two conditions:

1) this device may not cause harmful interference, and
2) this device must accept any interference received, including interference that may cause undesired operation.

Warning:

Use only shielded cables to connect I/O devices to this equipment.

You are cautioned that changes or modifications not expressly approved by the party responsible for compliance could void you authority to operate the equipment.

CE This device is in conformity with the EMC

Important ! Safety Instructions, Care and Handling

1. Before starting, take a few minutes to read this manual, read all of these instructions and save this manual for later reference.

2. Protect the Disk Array from extremely high or low temperatures. Let the Disk Array warm (or cool) to room temperature before using it.

3. Protect the Disk Array from being bumped or dropped. Do not place this product on an unstable cart, stand, or table. It may fall, causing serious damage to the product.

4. Keep the Disk Array away from magnetic forces.

5. Do not use this product near water.

6. Keep the Disk Array away from dust, sand, or dirt.

7. Gaps and openings in the cabinet and the back are provided for ventilation. To ensure reliable operation and to protect it from overheating, the gaps and openings should never be blocked or covered by placing the product on a bed, sofa, rug, or other similar surface.

8. Do not place this product near or over a radiator or heat register.

9. Refer to rating plate for voltage and check that the appliance voltage corresponds to the supply voltage.

10. The appliance must be grounded. This product is equipped with a 3wire grounding-type power cord, this power cord will only fit into a groundingtype power outlet.

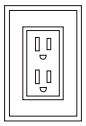

11. If an extension cord or a power center is used with this product, make sure that the total of all products plug into the wall outlet does not exceed the ampere rating.

12. Do not place the Disk Array where the cord will be walked on.

13. Never push any kind of object into this product through cabinet gaps and openings, they may touch dangerous voltage points cause a risk of fire or electric shock.

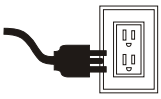

14. Unplug the power cord from the wall outlet before cleaning. Keep the Disk Array dry. Do not use liquid cleaners, aerosol cleaners, or a wet cloth. Use a damp cloth for cleaning.

15. Except as specifically explained in this User's Manual, please do not attempt to service this product by yourself. Opening or removing the covers may expose you to dangerous voltages.

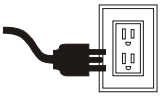

16. Unplug this product from the wall outlet and refer servicing to qualified service personnel under the following conditions :
    - If this product has been exposed to water or any liquid.
    - If the product has been dropped or the cabinet damaged.

Operating Environment

When selecting a suitable working location, please consider :

- Ventilation
- Temperature
- Dust and dirt
- Electromagnetic and Radio Frequency Interference.
- Security

The selected location should provide at least six inches of open space around the Disk Array cabinet for proper air flow.

Your Disk Array functions best at normal room temperature. Choose a location free from extreme heat or cold.
Warning! The Disk Array's LCD Panel may be damaged by exposure to intense sunlight. Limit exposure to indirect or subdued sunlight only.

Your Disk Array should be used in a clean environment that is free from airborne contaminants such as dust, dirt, and smoke. Excessive moisture or oil particles in the air can also hinder your system's performance.

To reduce the possibility of data errors caused by electromagnetic interference, locate your Disk Array at least five feet away from electrical appliances and equipment that generates magnetic fields.

About This Manual

This manual serves as a useful guide you can refer to when you wish to install and operate your Disk Array. It includes the following information :

- Chapter 1 : " Introduction "
  Introduces you to your new Disk Array's features and general RAID concepts.

- Chapter 2 : " Getting Started "
  Describes general information about this Disk Array.

- Chapter 3 : " Configuration "
  Provides a Quick and Easy way to setup this Disk Array.

- Chapter 4 : " Advanced Information "
  Describes information in more detail.

- Chapter 5 : " Hot-Swap "
  Describes Hot-Swap components.

- Appendix A : " Technical Specification "

Contents

Chapter 1 : Introduction

Features 1-2
General RAID concepts 1-4
RAID Level 0 1-5
RAID Level 1 1-7
RAID Level 3 1-8
RAID Level 5 1-10
Summary Comparison of RAID Levels 1-12
Supported RAID Levels 1-13
Multi-SCSI Format support 1-14

Chapter 2 : Getting Started

General Overview 2-1
Unpacking & Checklist 2-2
Choosing a place for Disk Array 2-3
Identifying Parts of Disk Array
Front View 2-4
Rear View 2-5
Power Source 2-6
Installing the Hard Disk Drive 2-7
Host Linkage 2-10
Power-On & Self-Test 2-11
LED Display & Function Keys
LED Display 2-12
Function Keys 2-13
LCD Status Panel 2-14

Chapter 3 : Configuration

General Overview 3-1
Configuration from the front Panel 3-2

Configuration Procedures 3-3
Starting the Configuration 3-4
Configuration from VT100 Terminal Mode 3-7
Configuration Procedures 3-8
Main Screen 3-9
Re-config RAID 3-10
Set RAID Level 3-11
Hot Spare Disk 3-12
Set SCSI ID# 3-13
Termination 3-14
Password 3-15
Save & Restart 3-16

Chapter 4 : Advanced Information

Memory Expansion 4-2
RAID Controller Block Diagram 4-5
Updating Firmware 4-6
Setting Up VT100 Terminal Emulation in Windows® 4-7
Start to Update Firmware 4-14
Capacity Expansion 4-20

Chapter 5 : Hot Swap

Removing / Installing Hard Disk Drive 5-2
Removing / Installing Redundant Power Supply Unit 5-6
Removing / Installing Cooling Fan 5-9

Appendix :

Technical Specifications A-1

Chapter 1 : " Introduction "

This chapter will introduce you to your new Disk Array's features and provide information on general RAID concept.

Features

This section provides an overview of the features. For more detailed information, please refer to the technical specifications appendix at the end of this manual .
Your Disk Array includes the following features :

Easy Operation

As everyone knows, conventional Disk Arrays are designed for experienced computer specialists. To solve complicated and time consuming operating procedures, we came up with a revolutionary idea :

-- Innovative Plug And Play RAID --

As compared to a conventional Disk Array's long-winded setup procedures, your Disk Array can be ready to go after using the simple step by step built-in setup program.

Ultra High performance

Your Disk Array combines an extremely high speed microprocessor with the latest chip set, SCSI hardware technology, perfect firmware and an artistic design. The result is one of the fastest, most reliable Disk Array systems on the market.

- Supports virtually all popular operating systems ,platforms and network environments because it works independently from the O.S.
- Ultra 160 LVD SCSI channel interface to your Host computer, up to 160MB data transfer rate provides the processing and access power for you to handle complex and large files.
- Selective SCSI ID 0 ~ 14 , support with active termination.
- Tagged-command queuing : allows processing of up to 255 simultaneous data requests.
- Selective RAID levels 0, 1, 0+1, 3 or 5.
- Build-in 64MB cache memory, expandable up to 128MB.
- Serial communication port (Terminal Port) permits array controller operation through a standard VT100 terminal (or equivalent).

Solid reliability

- Automatic failed disk drive detection.
- Auto rebuild : when a replacement disk installed (or by using hot spare disk), The system provides automatic data rebuild without any commands or functions keyed in. (Transparent to Host)

Efficient maintenance

- An LCD status panel displays a comprehensive readout of the operating status, and the HDD LED indicators on each HDD tray display the individual HDD status.
- When disk failure occurs on a member disk of the disk array, the built-in buzzer sounds simultaneously and LCD status panel also points out the location of the failed hard disk drive. In the meantime the LED HDD status indicator will light up " Red "on the failed HDD tray , according the LED indicator on the HDD tray you can perform quick, efficient and correct maintenance.
- Hot Swap : allows you can remove and install the " Hot Swap " parts without interrupting data access while the system is on.
- The " Hot Swap " parts include the Hard Disk Drive, Redundant Power Supply Unit and Cooling Fan.

General RAID Concepts

Correct installation of the disk array requires an understanding of RAID technology and the concepts described in this section.

Definition

RAID is an acronym of Redundant Array of Independent Disks .
A RAID is a Disk Array in which part of the storage capacity is used to record redundant information about the user data stored on the remainder of the storage capacity. The redundant information enables regeneration of user data in the event that one of the Array's member Disks or the access path to it fails.

Benefits of RAID

1. Secure Data

RAID is an emerging storage technology with the potential to revolutionize the data storage technology. A typical RAID unit contains a set of disk drives, typically two to six, which appear to the user to be equivalent to a single large capacity disk drive. The remarkable benefit of disk array is that if any single disk in the RAID fails, the system and array still continues to function without loss of data. This is possible because the redundancy data is stored on separate disk drives and the RAID can reconstruct the data that was stored on the failed disk drive.

2. Increases system performance

As the effective seek time for finding data on a disk can potentially be reduced by allowing multiple simultaneous access of different data on different disks. Utilizing parallel reads and writes of the data spread across the disks in the array, the data transfer rate can be increased significantly over that of a single disk.

3. Easy maintenance

RAID system maintenance is typically simplified because it is easy to replace individual disks and other components while the system continues to function. (Hot swap support)

RAID Levels

RAID Level 0 : " Disk Striping " High I/O Performance

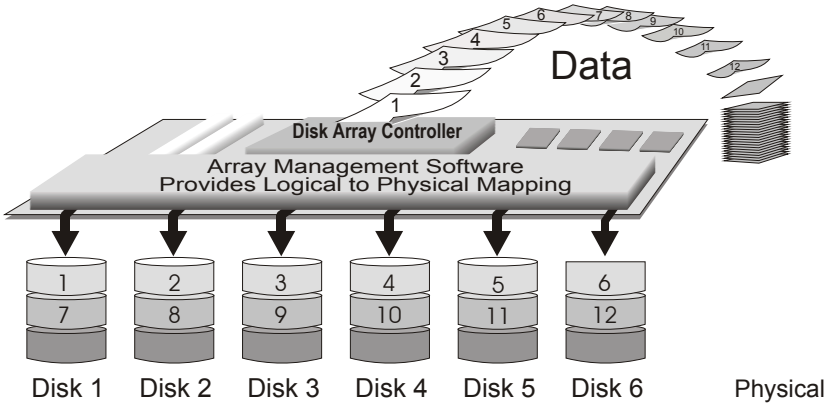

● Improved I/O performance is the major reason for using RAID level 0.

No protection is provided against data loss due to member disk failures. A RAID level 0 array by itself is thus an unsuitable storage medium for data that can not easily be reproduced, or for data that must be available for critical system operation. It is more suitable for data that can be reproduced or is replicated on other media.

A RAID level 0 array can be particularly useful for :

- Storing program image libraries or runtime libraries for rapid loading, these libraries are normally read only.
- Storing large tables or other structures of read only data for rapid application access. Like program images, the data should be backed up on highly reliable media, from which it can be recreated in the event of a failure.
- Collecting data from external sources at very high data transfer rates.

- RAID level 0 arrays are not particularly suitable for :
  - Applications which make sequential requests for small amount of data. These applications will spend most of their I/O time waiting for disks to spin, whether or not they use striped arrays as storage media.
  - Applications which make synchronous random requests for small amounts of data.

RAID Level 1 : " Disk Mirroring " High Data reliability

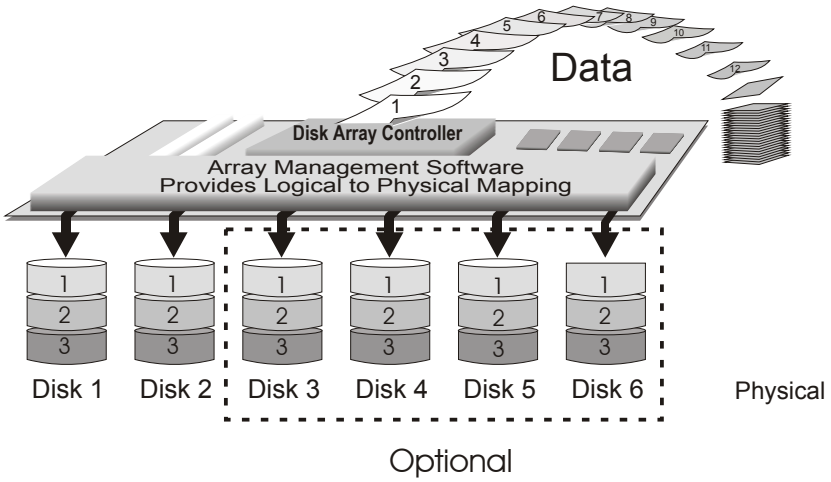

RAID level 1 provides both very high data reliability and continued data availability in the event of a failure of an array member. When a RAID level 1 member disk fails, array management software simply directs all application requests to the surviving member.

RAID level 1 is suitable for data for which reliability requirements are extremely high, or for data to which high performance access is required, and for which the cost of storage is a secondary issue.

RAID Level 3 :
" Parallel Transfer Disks with Parity "
High Data Reliability & Highest Transfer Capacity

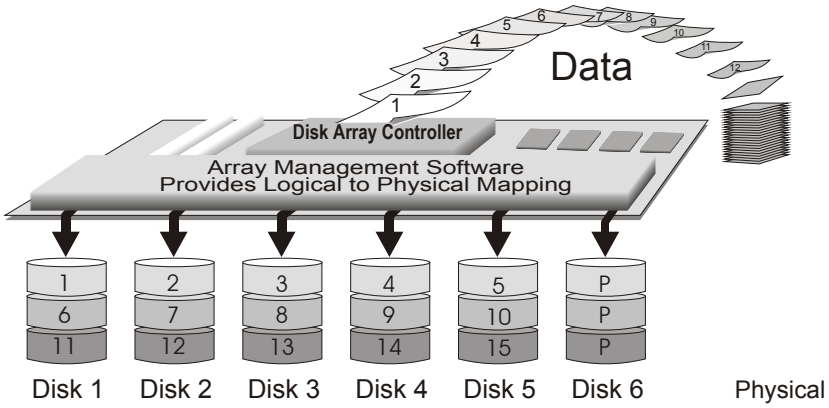

P : Parity

RAID Level 3 technology use a dedicated parity disk to store redundant information about the data on several data disks. RAID Level 3 is an excellent choice for applications which require single stream I/O with a high data transfer rate.

RAID Level 3 is optimal for applications in which large block of sequential data must be transferred quickly, these applications are usually of one of these types :

- They operate on large data objects such as graphical image processing, CAD/CAM files, and others.
- They are non-interactive applications that process large data sequentially.

They usually request a large amount of data (32KBytes or more) with each I/O request.

- The distinctive performance characteristics of RAID Level 3 :
  - RAID Level 3 provides excellent performance for data transfer-intensive applications.
  - RAID level 3 in not well suited for transaction processing or other I/O request-intensive applications.

RAID Level 5 :
" Independent Access Array with Rotating Parity "
High Data Reliability & Transfer Capacity

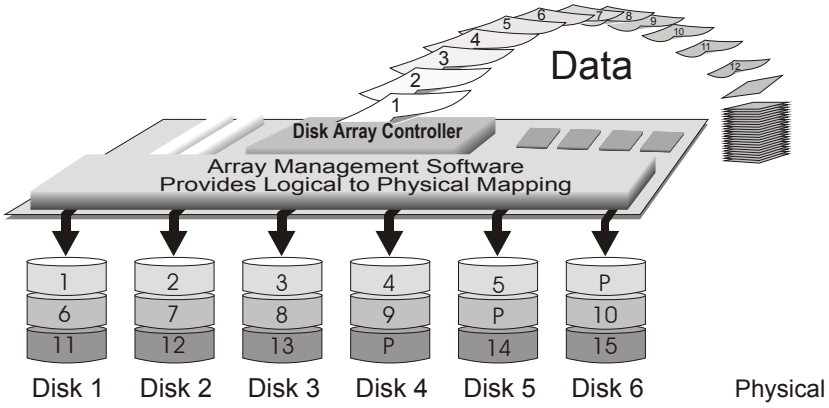

P : Parity

When RAID Level 5 technology is combined with cache memory to improve its write performance, the result can be used in any applications where general purpose disks would be suitable.

For read only or read mostly application I/O loads, RAID Level 5 performance should approximate that of a RAID Level 0 array. In fact, for a given user capacity, RAID Level 5 read performance should normally be slightly better because requests are spread across one more members than they would be in a RAID Level 0 array of equivalent usable capacity.

- A RAID level 5 array performs best in applications where data and I/O load characteristics match their capabilities :
  - Data whose enhanced availability is worth protecting, but for which the value of full disk mirroring is questionable.
  - High read request rates.
  - Small percentage of writes in I/O load.

- RAID level 5 arrays have unique performance characteristics :
  - The data can be recalculated or regenerated, using parity, when any drive in the array fails.
  - When the failed drive is replaced, either automatically if the subsystem contained a hot spare drive, or by user intervention during a scheduled maintenance period, the system will be restored its full data redundancy configuration by rebuilding all of the data that had been stored on the failed drive onto the new drive. This is accomplished using parity information and data from the other data disks. Once the rebuild process is complete, all data is again protected from loss due to any failure of a single disk drive.

Summary Comparison of RAID Levels

RAID Level	Common Name	Description	Array's Capacity	Data Reliability	Data Transfer Capacity
0	Disk Striping	Data distributed across the disks in the array. No redundant Information provided.	(N) disks	Low	Very High
1	Mirroring	All data Duplicated	1*disks	Very High	High
3	Parallel Transfer Disks with Parity	Data sector is subdivided and distributed across all data disk. Redundant information stored on a dedicated parity disk.	(N-1) disks	Very High	Highest of all listed alter-natives
5	Independent Access Array with Rotating Parity	Data sectors are distributed as with disk striping, redundant Information is interspersed with user data.	(N-1) disks	Very High	Very High

Supported RAID Levels

Based on the needs of a Disk Array's capacity, data availability, and overall performance, you can select a proper RAID level for your Disk Array. The supported RAID levels are shown in below :

RAID Level	Function Description	Drives required Min.	Max.
0	"Disk Striping" , block striping is used, which yields higher performance than with the individual disk drives. * There is no redundant function.	2	6
1	"Disk Mirroring" , Disk drives are mirrored , All data is 100% duplicated on each equivalent disk drives. * High Data Reliability	2	6
3	" Parallel Transfer Disks with Parity ", Data is striped across physical drives. Parity protection is used for data redundancy.	3	6
5	" Independent Access Array with Parity ", Data is striped across physical drives. Rotating Parity protection is used for data redundancy.	3	6
0+1	" Disk Striping " + " Disk Mirroring " Function.	4	6

Multi-SCSI Format support

The Disk Array provides one LVD Ultra 160 SCSI channel for connect to your host system. With proper cabling, it may support Narrow or Wide; Standard, Fast or Ultra /Ultra 2 /Ultra 160 SCSI formats.
(single ended)

Overall cable length
For secure data transfer , please refer to the cable length limitations as below :

* Cable length = External Host cables length + Internal Host cable length
* Standard Disk Array External cable length = 90cm (3 ft)
* Standard Disk Array Internal cable length = 20cm

SCSI Type	Clock Rate	Data Rate	Maximum Cable Length	Cable Required	Remark
LVD Ultra 160 (16 bit)	40 MHZ	160 MB/sec	12m	HPD 68--- HPD 68 pin	
LVD Ultra 2 (16 bit)	40 MHZ	80 MB/sec	12m	HPD 68--- HPD 68 pin	
Ultra wide (16 bit)	20 MHZ	40 MB/sec	2m	HPD 68--- HPD 68 pin	
Ultra SCSI (8 bit)	20 MHZ	20 MB/sec	2m	HPD 68--- HPD 50 pin	
SCSI 2 (8 bit)	10 MHZ	10 MB/sec	3m	HPD 68--- Cen. 50 pin	

Chapter 2 : " Getting Started "

General Overview

This chapter helps you get ready to use the Disk Array. It gives you :

- Unpacking & Checklist
- Choosing a place for Disk Array
- Identifying Parts of Disk Array
- Power Source
- Installing the Hard Disk Drives
- Host Linkage
- Power-On and Self-test
- LED Display and Function Keys
- LCD Status Display

The following illustrations will help you read the further sections.

Special Note :

RAID should never be considered a replacement for doing regular backup. It's highly recommended to conduct a backup strategy for critical data.

Unpacking & Checklist

Before unpacking your Disk Array , prepare a clean and stable place to put the contents of your Disk Array's shipping container on. Altogether, you should find the following items in the package :

- The Disk Array
- One AC power cord
- One External SCSI cable
- Keys (For HDD Trays)
- User Guide
- RS-232 Cable

Remove all the items from the carton. If anything is missing or broken , please inform your dealer immediately.
Save the cartons and packing materials that came with the Disk Array. Use these materials for shipping or transporting the Disk Array.

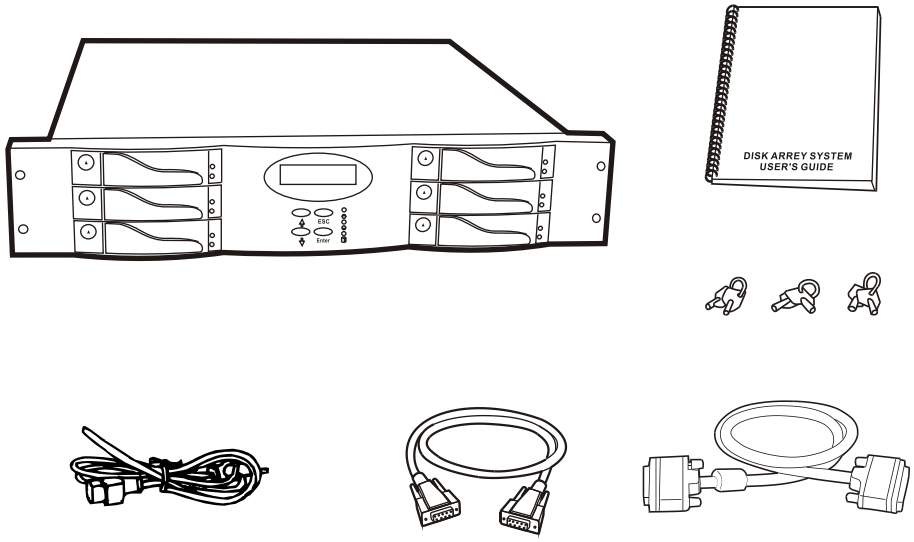

Figure : Checklist

Choosing a place for Disk Array

When selecting a place to set up your Disk Array, be sure to follow the guidelines as below:

- Place on a flat and stable surface.
- Use a stand that supports at least 50 kgs for this Disk Array. (HDD included)
- Place the Disk Array close enough to the computer for the Disk Array's External SCSI cable to reach it.
- Use a grounded wall outlet.
- Avoid an electrical outlet controlled by wall switches or automatic timers. Accidental disruption of the power source may wipe out data in the memory of your computer or Disk Array.
- Keep the entire system away from potential sources of electromagnetic interference, such as loudspeakers , cordless telephones, etc.
- Caution !
  Avoid direct sunlight, excessive heat, moisture, or dust.

Identifying Parts of the Disk Array

Front View

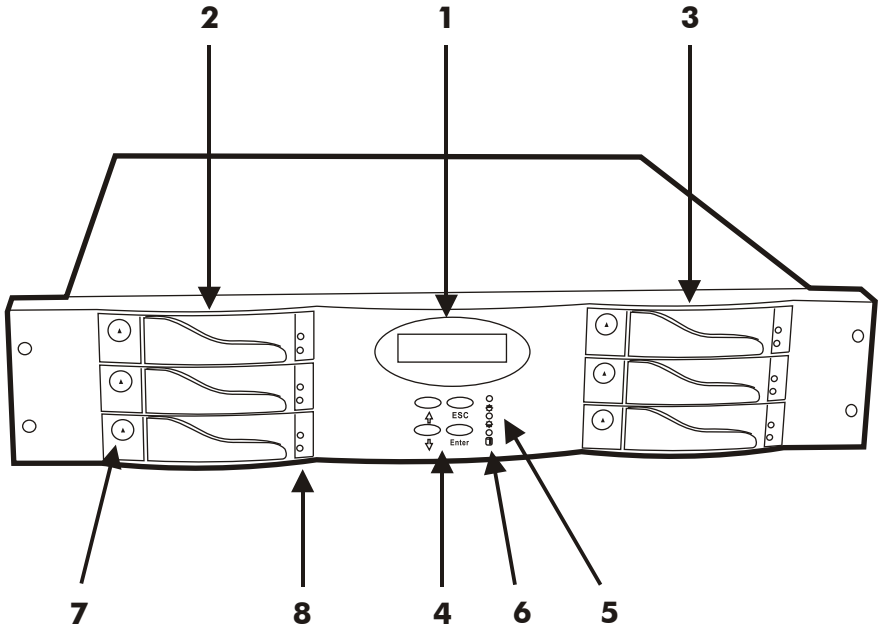

Figure : Front View

1. LCD Status Display Panel
2. HDD Trays 1 ~ 3 (From Up to Down)
3. HDD Trays 4 ~ 6
4. Function Keys (↑ , ↓ , Enter , ESC)
5. Power-On Indicator (PWR Unit 1 , PWR Unit 2)
6. Host Computer Access Indicator
7. HDD Tray Lock (Lock / Unlock)
8. HDD Status Indicator
   (Error (Red), Access (Yellow), Power-On (Green))

REAR VIEW

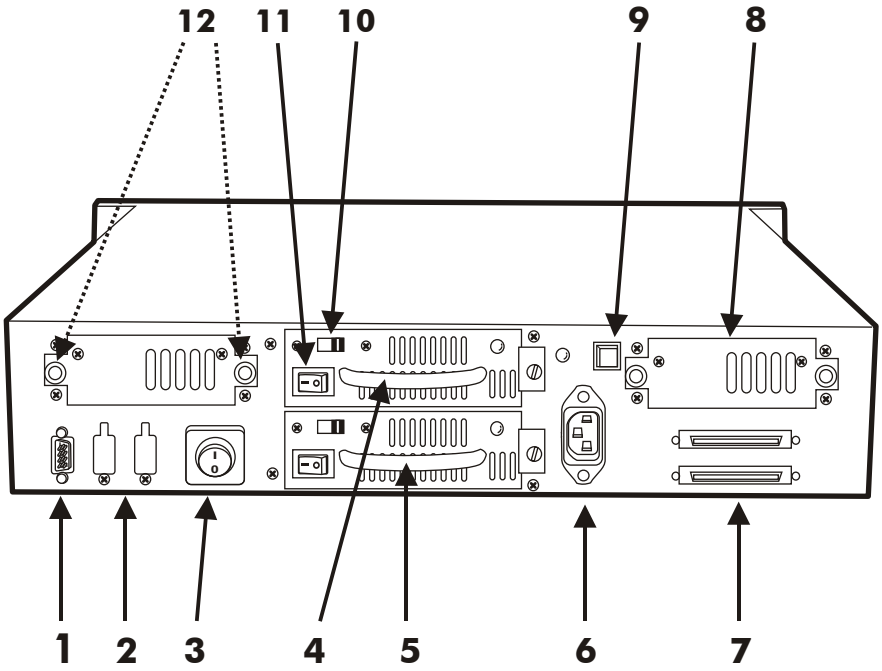

Figure : Rear View

1. RS-232 Adapter (Terminal Port)
2. Reserved
3. Power Supply Main Switch (0 / I)
4. Power Supply Unit 1
5. Power Supply Unit 2
6. AC Power Input Socket
7. SCSI Channel Port
8. Cooling Fan
9. Power Supply "**Alarm**" Reset Button
10. AC Voltage Select Switch (115V/230V)
11. Power Supply Unit On/Off Switch (0 / I)
12. Cooling Fan Screws

Power Source

Choosing a Working Voltage

The system can run either on AC 115V (+/10%) or AC 230V (+/10%), Slide the AC voltage select switch on both of the two power supply units to the correct position which corresponds with the wall outlet supply voltage.

Warning !

Wrong AC Voltage input will harm the power supply and cause serious damage to the Disk Array.

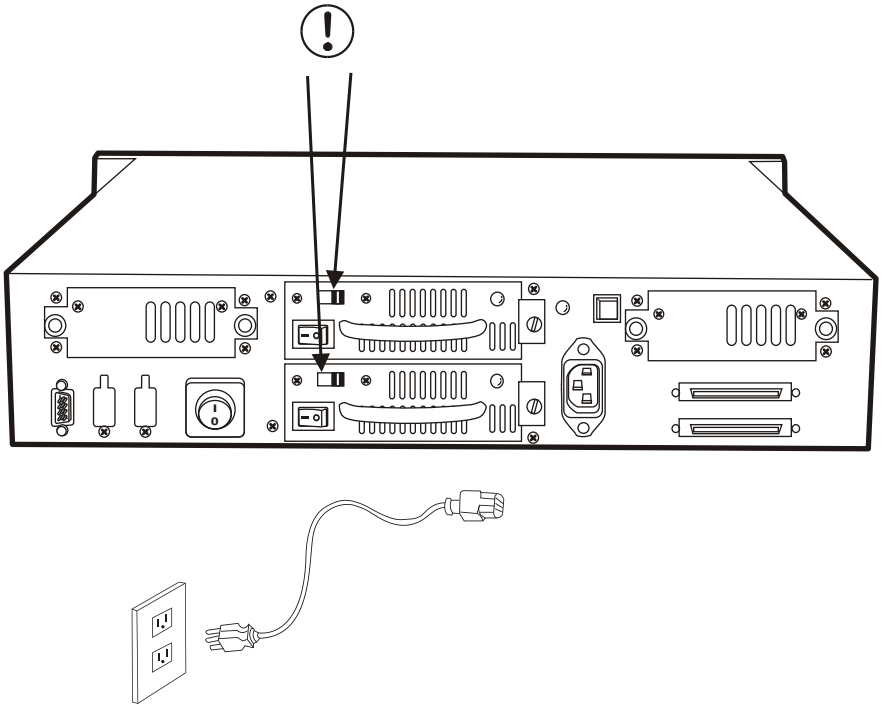

Figure : Power Source

! This Disk Array must be grounded

This Disk Array is supplied with an AC power cord equipped with a 3-wire grounding type plug. This is a safety feature and it is important to only use a 3-wire grounded mains power cord.

Installing the Hard Disk Drives

Step 1 : Unlock the HDD tray by turning the Key-lock to the correct position.
Step 2 : Gently Pull out the HDD tray.

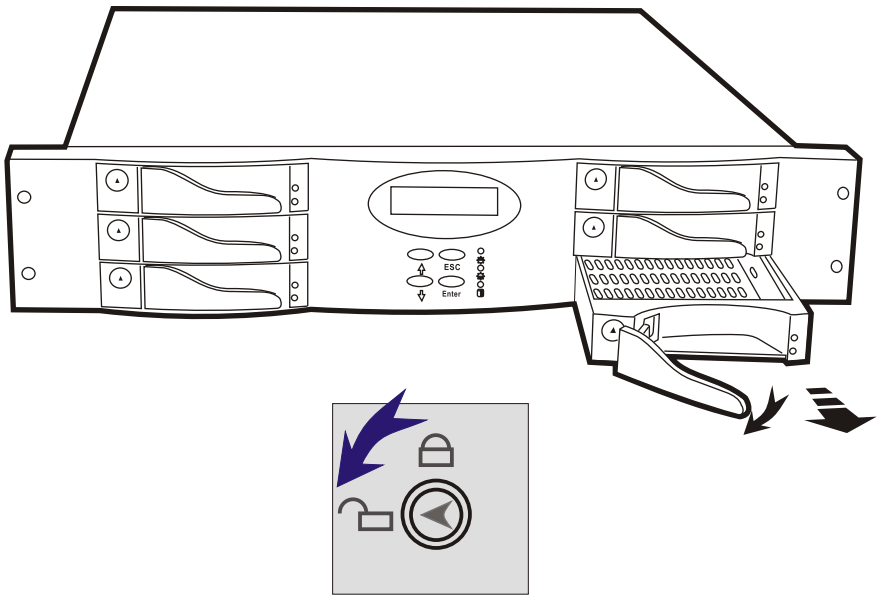

Figure : Installing HDD step 1, 2

Step 3 : Insert HDD into the tray

Step 4 : Screw in the hard drive.
(Use the correct size, type and thread)

Step 5 : Cabling, Connect the Data cable and Power cable.

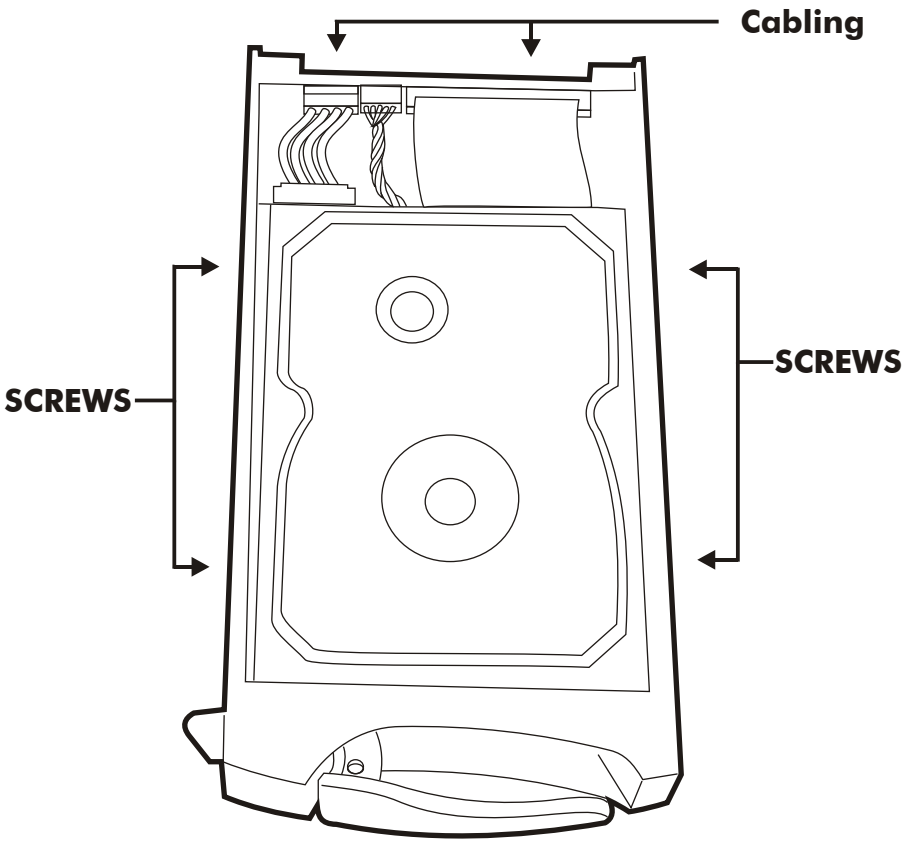

Figure : Installing HDD step 3, 4, 5

Step 6 : Gently slide in the HDD tray.

Step 7 : Lock the HDD tray. When powered on, the Green LED will light up.

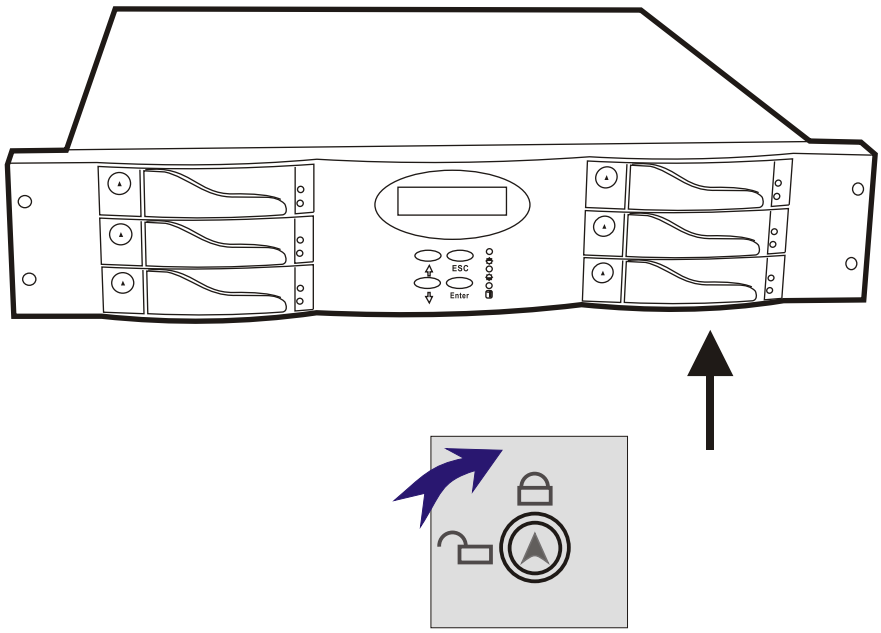

Figure : Installing HDD step 6, 7

Host Linkage

With the HDD(s) installed correctly, you are ready to connect the Disk Array to your Host computer.
Use a shielded twisted-pair SCSI cable to connect your Host computer to the Disk Array's built-in 68 pin SCSI adapter port.

Connect the Host computer as shown below :

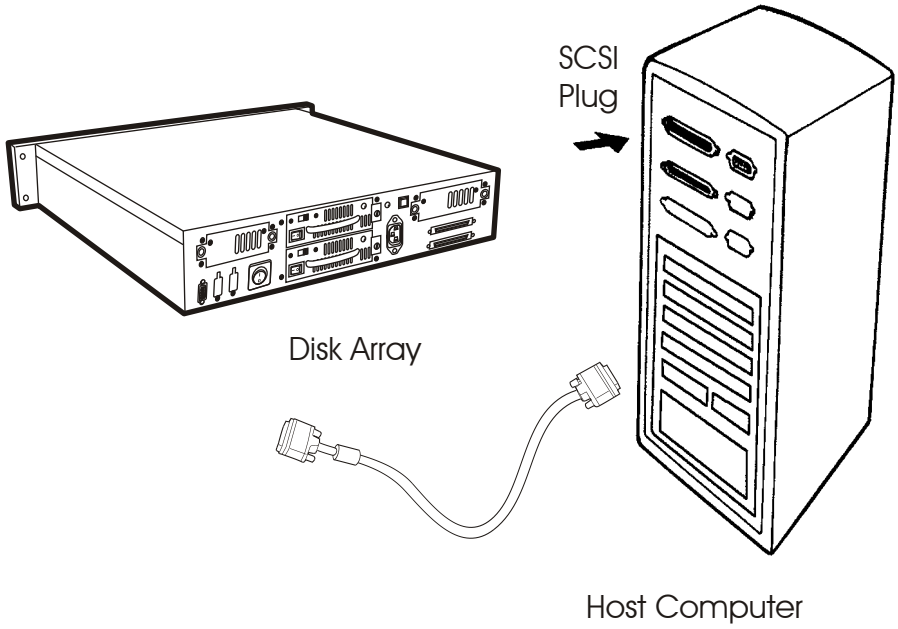

Figure : Host linkage

Caution !

For safety reasons, make sure the Disk Array and Host Computer are turned off when you plug-in the SCSI cable.

Power-On and Self-Test

When you connect the Disk Array to the Host computer, You should press the ON/OFF Power Supply Switch on both of the power supply Hot-Swap units and the Main Switch.
It will turn the Disk Array on and the Self-Test will be started automatically.

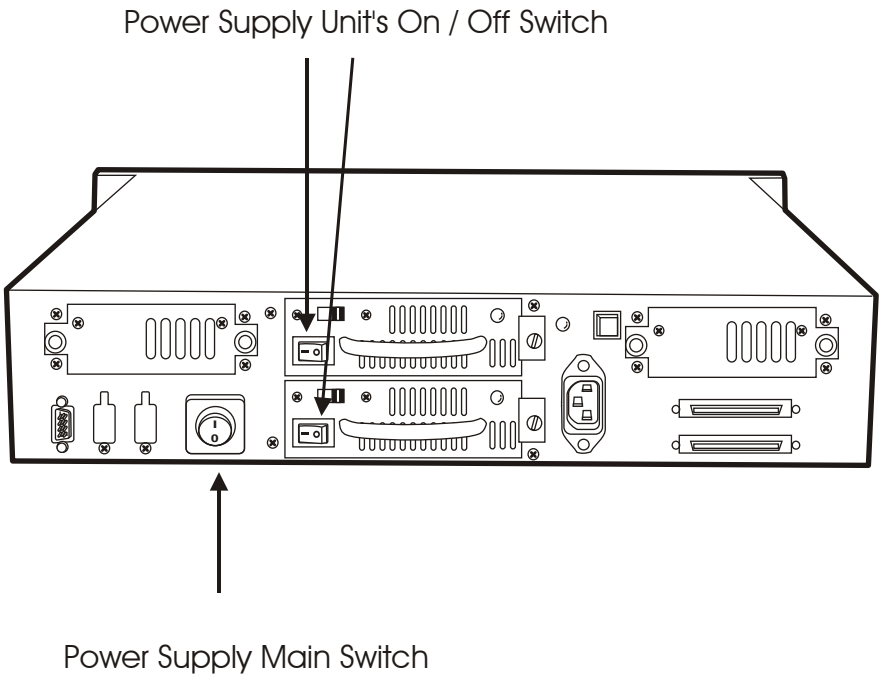

LED Display & Function Keys

◎LED Display

Shown below is the LED Display. Please refer to the illustration, the LEDs inform you of the Disk Array's current operating status. Upon activating a certain function, the corresponding LED indicator should turn on indicating that the feature is engaged.

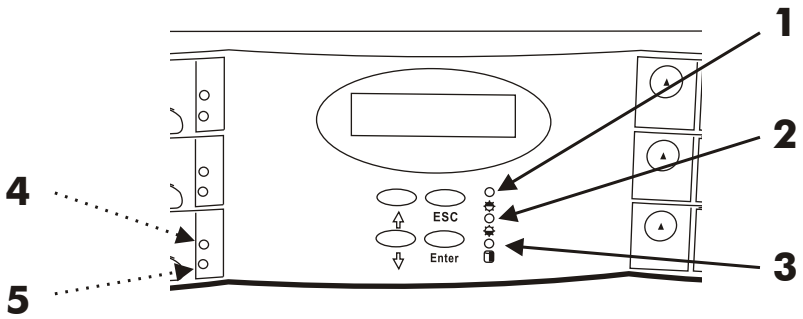

Figure : LED Display

LED	Descriptions
1. Power Unit 1 Indicator	light up : "**Green**" , it lights when the Power Unit 1 is plugged and operating functionally.
2. Power Unit 2 Indicator	light up : "**Green**" , it lights when the Power Unit 2 is plugged and operating functionally.
3. Host Computer Access Indicator	light up : "**Yellow**" , Indicates Host computer is currently accessing the Disk Array
4. HDD Power-On Indicator	light up : "**Green**" , It lights when the HDD frame is locked and Power-On
HDD Error Indicator	light up : "**Red**" , when the HDD not installed or error.
5. HDD Access Indicator	light up : "**Yellow**" , when HDD is accessed

Function Keys

The four function keys at the top of the front panel perform the following functions :

(↑) Up Arrow / Right Arrow	Use to scroll the cursor Upward / Rightward
(↓) Down Arrow / Left Arrow	Use to scroll the cursor Downward / Leftward
(Enter)	Use to confirm a selected item
(ESC)	Use to exit a selection

LCD Status Panel

Located the LCD panel, the LCD status panel informs you of the Disk Array's current operating status at a glance. Upon activating a certain function, a symbol or icon corresponding to that function will appear in the display window. The symbol will remain in the display window indicating the status of the Disk Array.

Identifying the status on the LCD

The following illustration shows the symbols (characters) been used and their representation.
A description of each of the symbols in LCD display window :

O	On-line and functional
R	Error occur
I	Identifying Disk Drive
S	Spare Disk Drive
X	Disk Drive not installed
W	Warning : Disk Drive with too many Bad Sectors

Example of the LCD status display window :

```
OOOOSX   R5   ID:0
```

This informs you :

a. HDD 1 ~ HDD 4 : Online
b. HDD 5 : It is a Spare disk drive
c. HDD 6 : Not installed
d. RAID Level : In " RAID Level 5 "
e. SCSI ID : In " ID# 0 "

Chapter 3 : " Configuration "

After completing the hardware installation, the disk array must be configured and the logical unit must be initialized before it is ready to use. This can be accomplished through the following user interfaces :

- Front Panel function keys (LCD Display)
  or
- VT100 terminal connected through the serial port (Monitor Port)

☆ The LCD display panel and a VT100 terminal can not be used at the same time.

This chapter guides you through setting up your Disk Array for the first time. This chapter contains information on setup. The setup program is a menu-driven utility which enables you to make changes to the configuration and tailor your Disk Array to your individual needs.
The setup program is a ROM-based configuration utility which displays the Disk Array's status and allows you to set up the parameters. The parameters are stored in a nonvolatile battery backup CMOS RAM which saves the information even when the power is off.
By using an easy-to-use user interface, you can configure such items as :

- RAID Level
- Hot Spare Disk
- SCSI ID
- Termination
- Password (For protection from unauthorized use)
- Firmware update (VT100 Terminal mode only) --- for update procedures please refer to Chapter 4 : Advanced information.

The setup program has been designed to make it as easy to use as possible. By using a menu-driven program, you can scroll through the various sub-menus and make your selections among the various predetermined choices.

Configuration from the front Panel

The LCD Display front panel function keys are the primary user interface for the Disk Array. Except for the "Firmware update" ,all configuration can be performed through this interface.

Function Key Definitions

The four function keys at the top of the front panel perform the following functions :

(↑) Up Arrow / Right Arrow	Use to scroll the cursor Upward / Rightward
(↓) Down Arrow / Left Arrow	Use to scroll the cursor Downward / Leftward
(**Enter**)	Use to confirm a selected item
(**ESC**)	Use to exit a selection

Configuration procedures (via Front Panel)

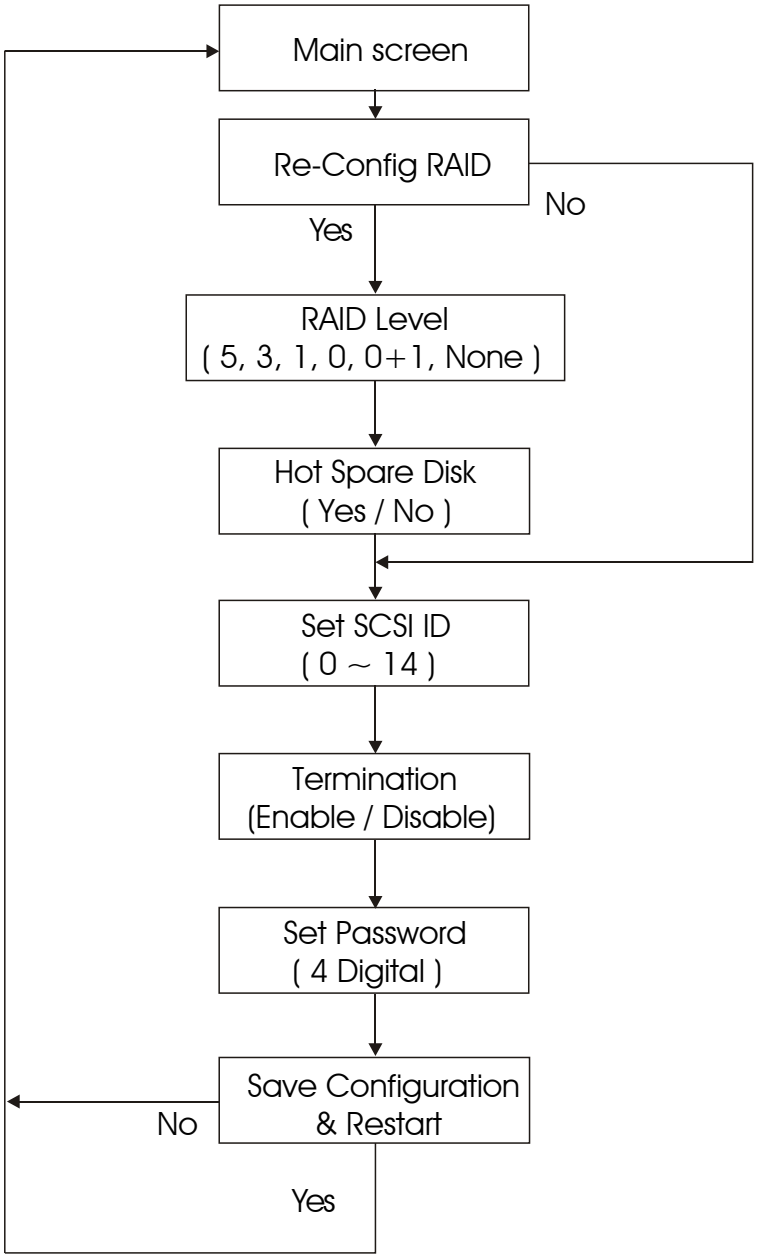

Starting the configuration

1. Power-on the Disk Array. At the end of the power-on self test program, the LCD displays the current system status.

2. Press the front panel " **Enter** " key to access the built-in configuration program.

3. When the screen displays the password prompt and asks you to " Enter Password "

   ```
   Enter Password
   0■■■
   ```

   press " Enter " 4 times to input the default password
   (default password is " 0000 ")

4. **Re-Configuration RAID**

   Select " **No** " to just set up " SCSI ID# ", "Terminator", and "Password"

   Select " **Yes** " to set up " RAID Level " , " Hot spare disk " , " SCSI ID# " , " Terminator " , and " Password "

5. **Set RAID Level**

Move cursor (↑ ↓) to the desired RAID Level **(5, 3, 1, 0, 0+1, None)**, press " **Enter** " to confirm.

Warning

All data on the disk drives will be lost by changing the RAID Level.

* RAID Level " **None** " = **No Configuration**

6. **Set Hot Spare Disk**

Select " **Yes** " to set **one** Disk Drive as a Hot-spare Disk.
(Valid for RAID Level 5 and 3 , the total number of Disk Drives installed **must be more than 3 Disk Drives)**

7. **Set SCSI ID**

Each device on a specific SCSI bus must be configured with a target address (which is a "SCSI ID") which is different from any other devices on the SCSI Bus.

The default SCSI ID for this system is ID 0.

If you need to assign a different ID # for your Disk Array. The available SCSI ID# for this system is ID# 0 ~ 14 .

You must assign a different SCSI ID to each SCSI device on the SCSI Bus. The SCSI ID# must be Unique for each device.

8. **Termination**

Terminating a SCSI chain is achieved by adding a terminator to each end of the SCSI bus. The Disk Array supports active termination at the controller's SCSI end.

Termination "enabled" must be set when the Disk Array is at one end of the SCSI Bus.

9. **Set Password**

Press " **Enter** " to activate the Password setting. When the cursor stop on the desired "number" or "character", Using " ↓ " and " ↑ " function keys to choose the desired characters and then press " **Enter** " to confirm it.

☆ Press " **ESC** " function key for password "**No Change**"

10. **Save Configuration & Restart**

Select the Save Configuration function and Press the " Enter " key to save and activate your selections.

STOP

Warning ! All data will be lost if you change RAID Levels .

WARNING

Saving configuration changes causes the disk array controller's working parameters to change. This can produce unpredictable results if it occurs during Host and Array activity. All activity to the controller should be stopped before saving configuration changes.

Configuration from VT100 Terminal Mode

By connecting a VT100 compatible terminal or a PC operating in a terminal emulation mode, a configuration can be performed through this interface.
To ensure proper communications between the "Disk Array" and the "Terminal", Please configure the VT100 terminal settings to the values shown below :

VT100 Terminal (or compatible) Set up

Connection	Serial Port (COM 1 or COM 2)
Protocol	RS232 (Asynchronous)
Cabling	Null-Modem cable
Baud Rate	115,200
Data Bits	8
Stop Bit	1
Parity	None

Keyboard Function Key Definitions

" **Enter** " key, Use to confirm a selected item

" **ESC** " key, Use to exit a selection

" **A** " key, Use to scroll the cursor Upward / Rightward

" **Z** " key, Use to scroll the cursor Downward / Leftward

" **Tab** " key, Use to switch mode (Menu / Output Area)

Configuration procedures (VT100 Terminal)

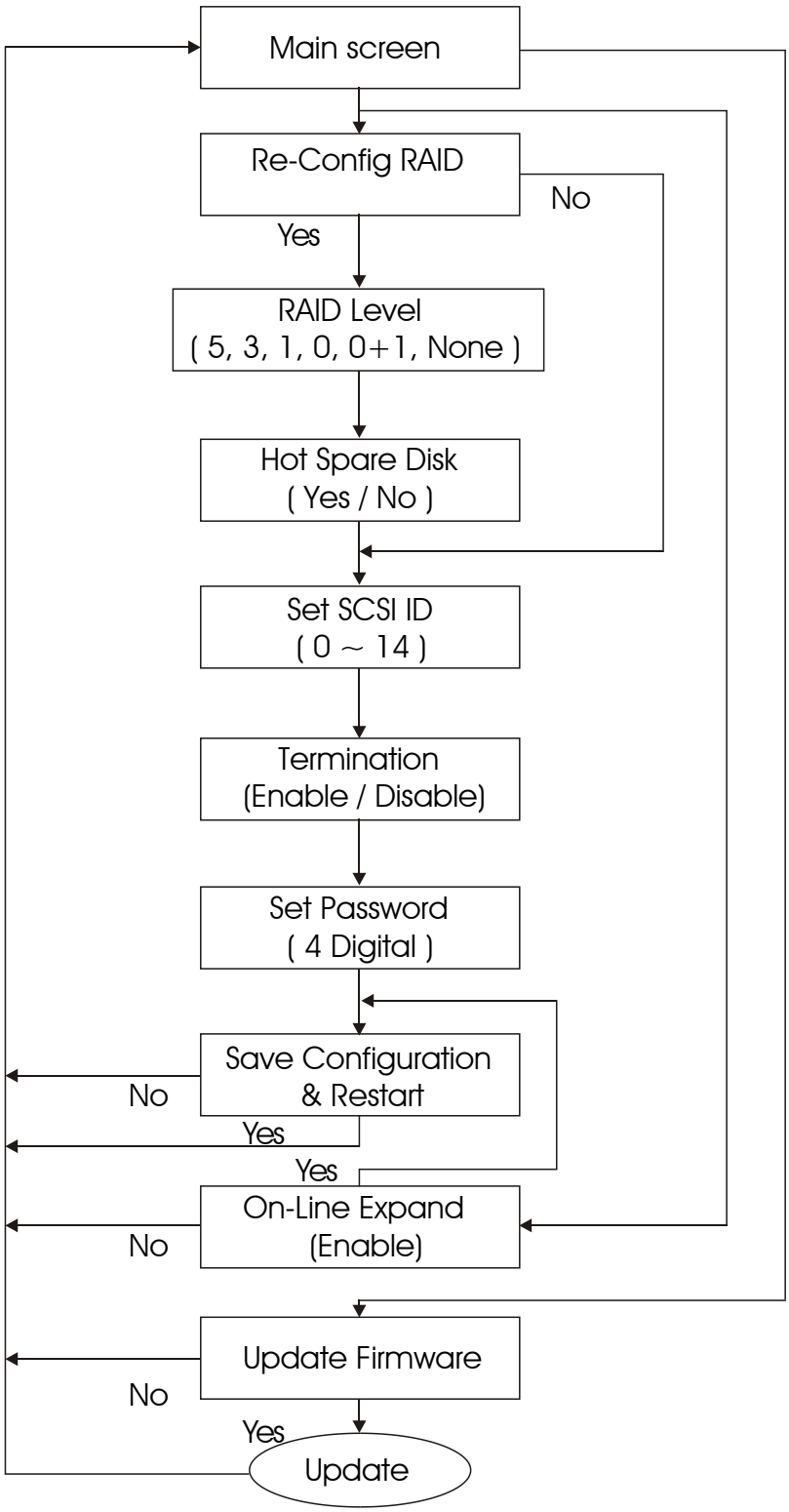

Main Screen

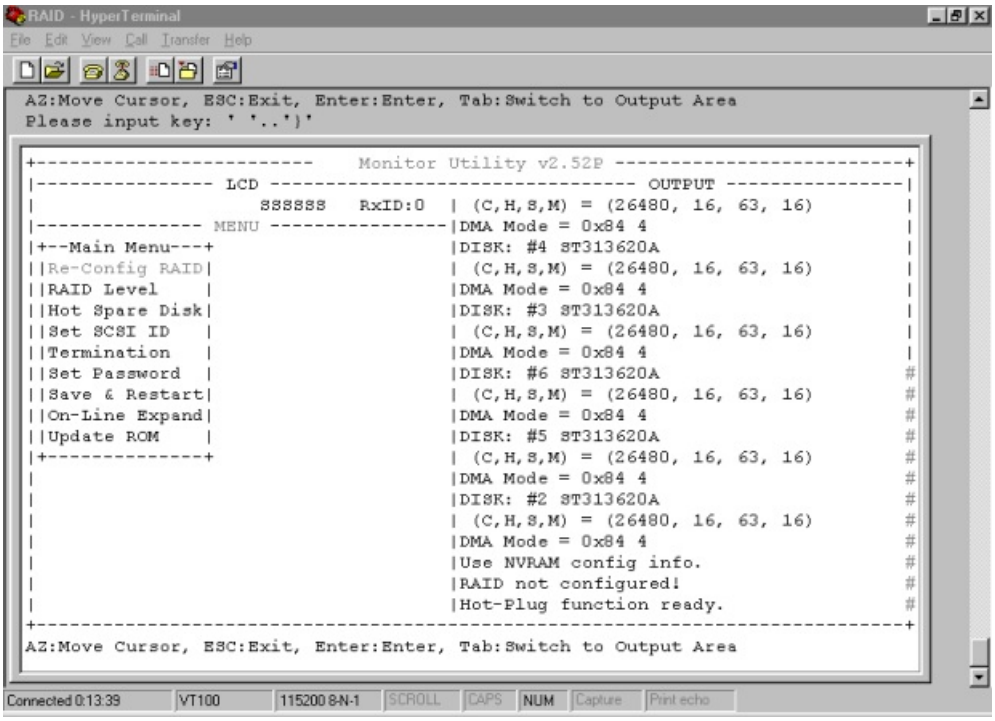
RAID - HyperTerminal
File Edit View Call Transfer Help
AZ:Move Cursor, ESC:Exit, Enter:Enter, Tab:Switch to Output Area
Please input key: ' '..'}'
Monitor Utility v2.52P
LCD
SSSSSS RxID:0
OUTPUT
MENU
Main Menu
Re-Config RAID
RAID Level
Hot Spare Disk
Set SCSI ID
Termination
Set Password
Save & Restart
On-Line Expand
Update ROM
(C,H,S,M) = (26480, 16, 63, 16)
DMA Mode = 0x84 4
DISK: #4 ST313620A
DISK: #3 ST313620A
DISK: #6 ST313620A
DISK: #5 ST313620A
DISK: #2 ST313620A
Use NVRAM config info.
RAID not configured!
Hot-Plug function ready.
AZ:Move Cursor, ESC:Exit, Enter:Enter, Tab:Switch to Output Area
Connected 0:13:39
VT100
115200 8-N-1
SCROLL
CAPS
NUM
Capture
Print echo

Re-Config RAID

Select " No" for setting : " SCSI ID ", " Terminator ", " Password "

Select " Yes " for setting all the configurations

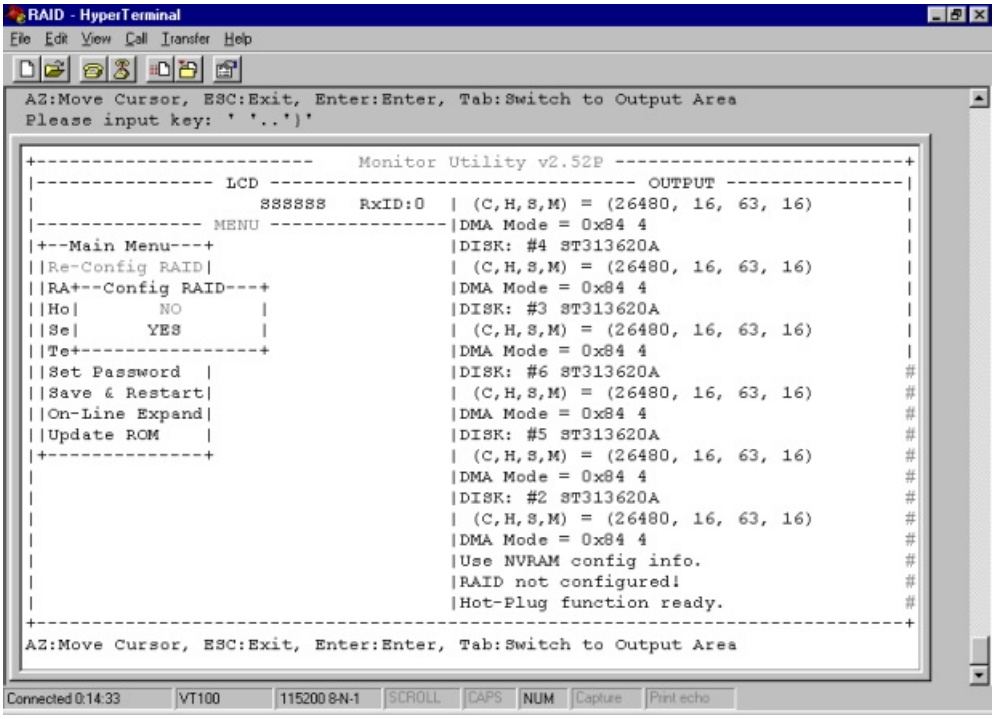

Set RAID Level

Move the cursor to the desired RAID Level (5, 3, 1, 0, 0+1, none), and Press " Enter " to confirm it.

Warning All Data will be lost by changing the RAID level.

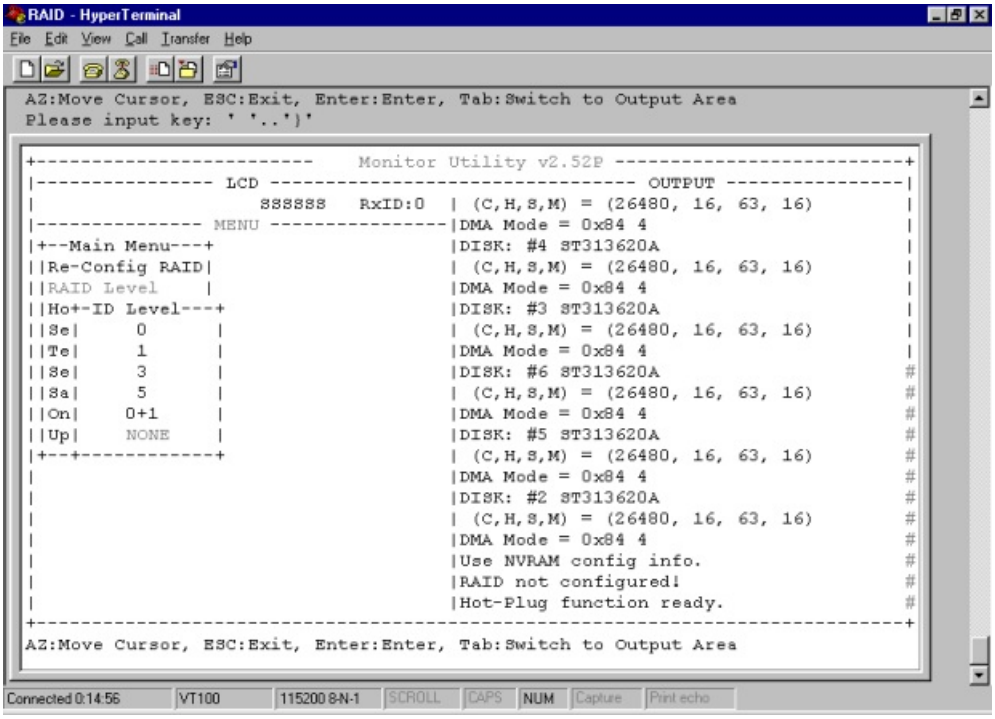

Hot Spare Disk

Select " **Yes** " to set **One Disk Drive** as a Hot Spare Disk.
This Function is **valid in RAID level 5** and **RAID level 3**, the total Disk Drives installed must be more than 3 Disk Drives.
(Disk Drives number > 3)

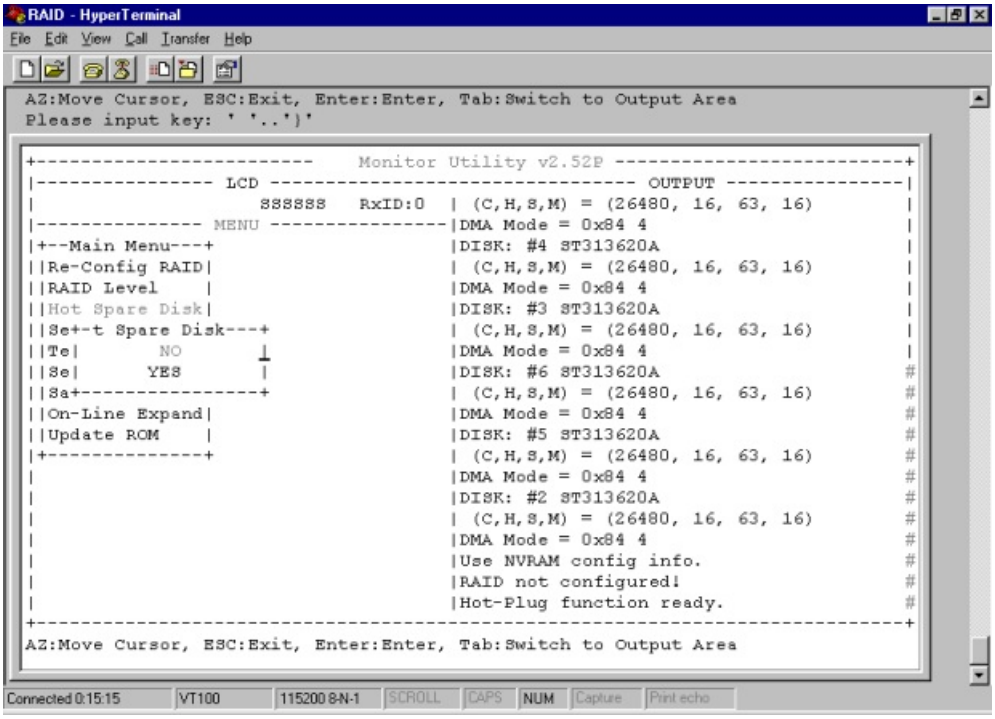

Set SCSI ID#

Each device on a SCSI bus must be configured for a Target address (which is a "SCSI ID"), which is different from any other device on the SCSI Bus.

The default ID for this Disk Array is ID#0

If you need assign a different ID# for your Disk Array,
The available SCSI ID# for this system is ID# 0 ~14

You must assign a different SCSI ID to each SCSI device on the SCSI Bus. The SCSI ID# must be unique for each device.

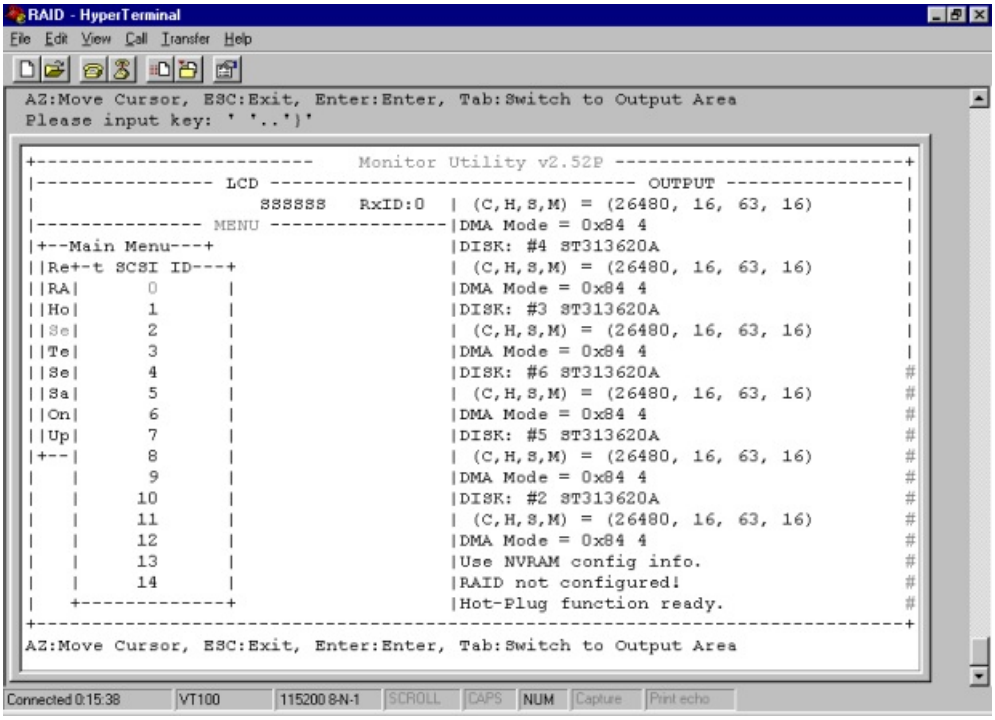

Termination

Terminating a SCSI chain is achieved by adding a terminator to each end of the SCSI Bus. The Disk Array supports active termination in the controller's SCSI end.

Termination "enabled" must be set when the Disk Array is at one end of the SCSI Bus.

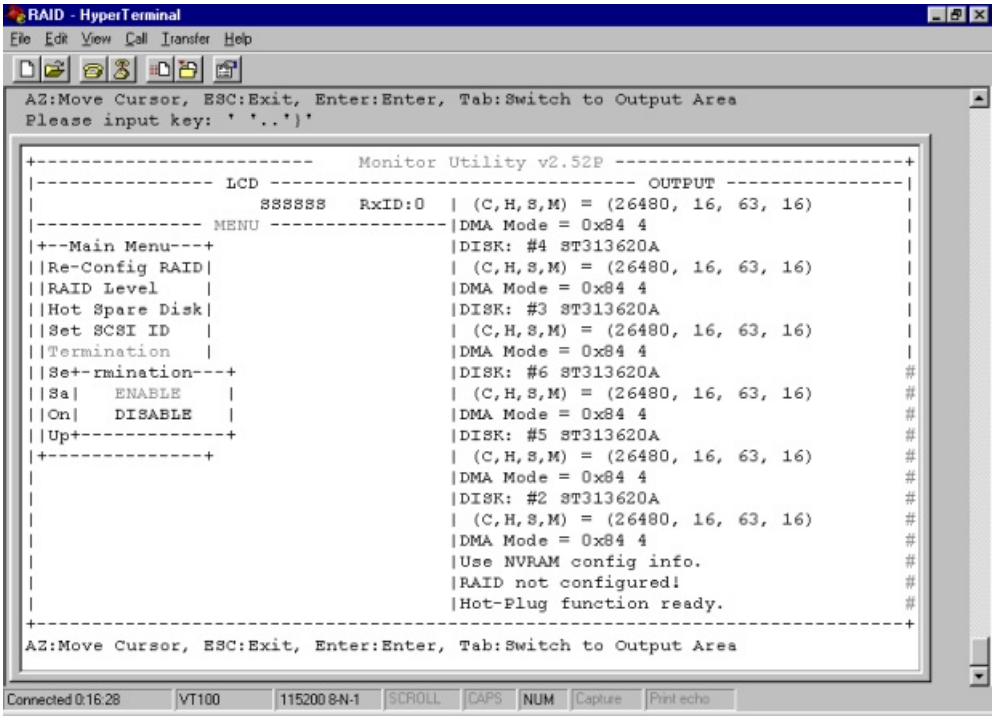

Set Password

Press " **Enter** " to activate the password setting when you key-in the desired " Number " or " Character ".

Press " ESC " for no change to the password.

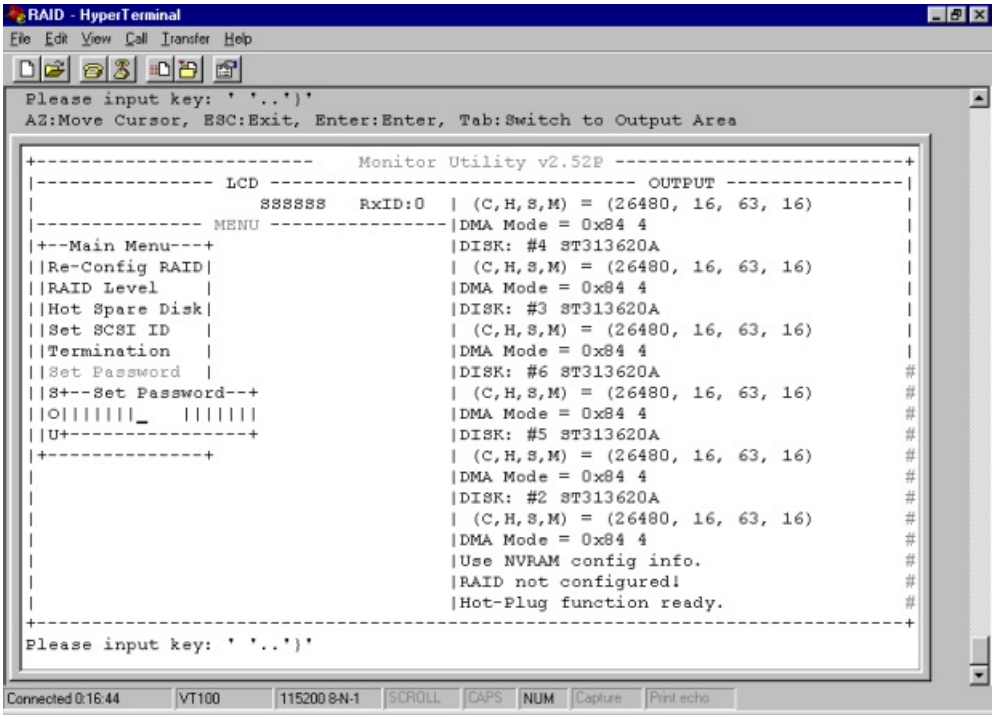

Save & Restart

Select the Save & Restart function and press " **Enter** " to save and activate your selections.

STOP

Warning! All data will be lost if you change the RAID level

WARNING

Saving configuration changes causes the disk array controller's working parameters to change. This can produce unpredictable results if it occurs during Host and Array activity. All activity to the controller should be stopped before saving configuration changes.

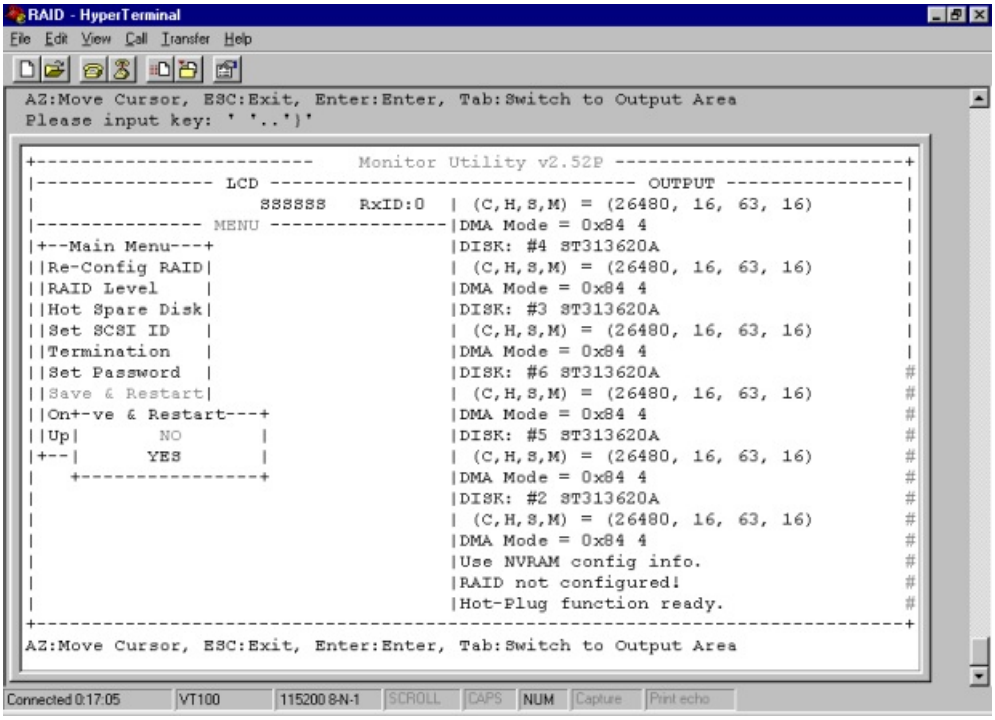

Chapter 4 : " Advanced Information "

This chapter describes more information about your Disk Array. The following items are describes in detail.

- Memory Expansion
- RAID Controller
- Updating Firmware
- Capacity Expansion (On-Line Expand)

Memory Expansion

Your Disk Array comes with 64MB of memory that is expandable to a total of 128MB by installing additional memory modules. The optional memory expansion socket is provided for installing memory module. These expansion memory module can be purchased from your dealer.

- Memory Type : 60NS STD 144pin DIMMs (SDRAM).
- Memory Size : Supports 144pin DIMMs of 64MB, or 128MB

Do not use DIMM modules which have an extra logic chip that has been used to convert the memory module from asymmetric to symmetric.

- Installing Memory Modules :

1. Unscrew & Remove cover

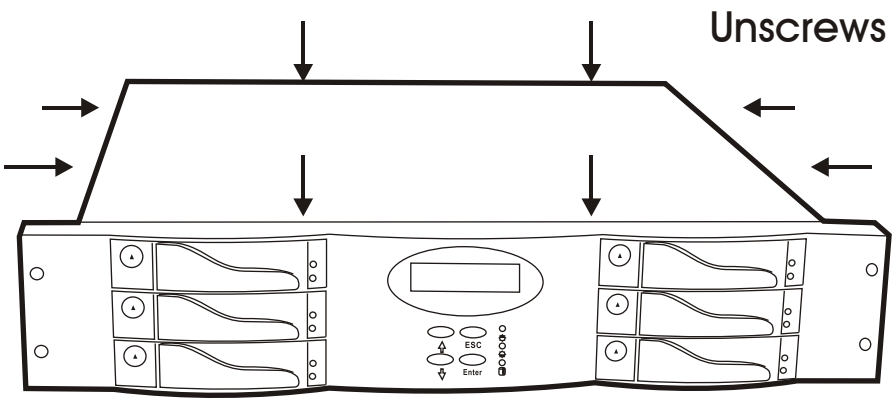

Figure : Remove Cover

2. Install the memory

a. The DIMM memory modules will only fit in one orientation.
b. Press the memory module firmly into socket from a 45 degree angle, make sure that all the contacts are aligned with the socket.
c. Push the memory module forward to a horizontal position.

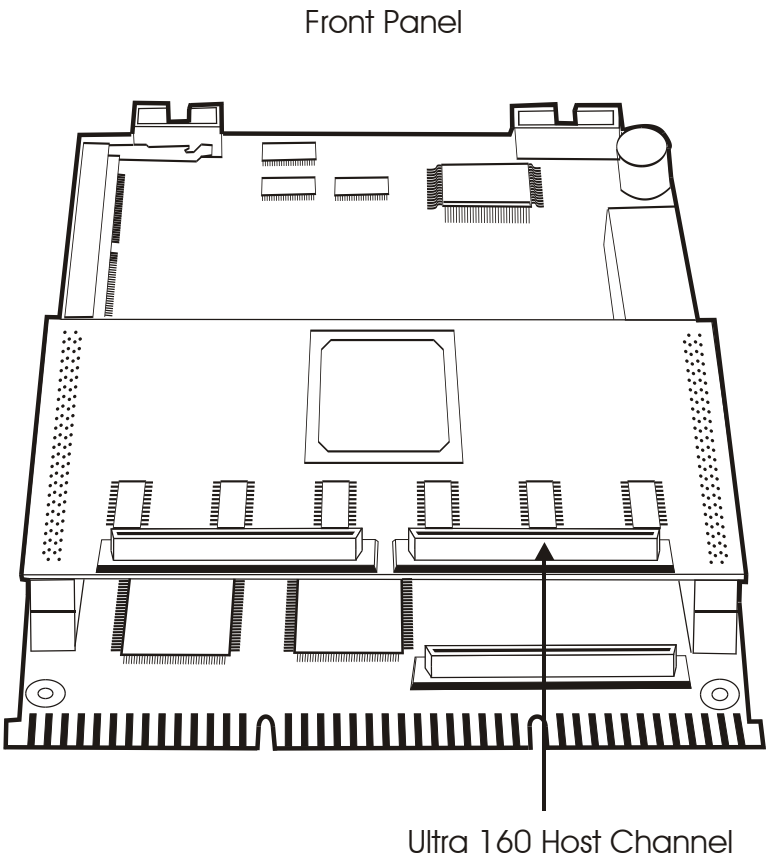

Figure : Controller

Disk Array Controller Block Diagram

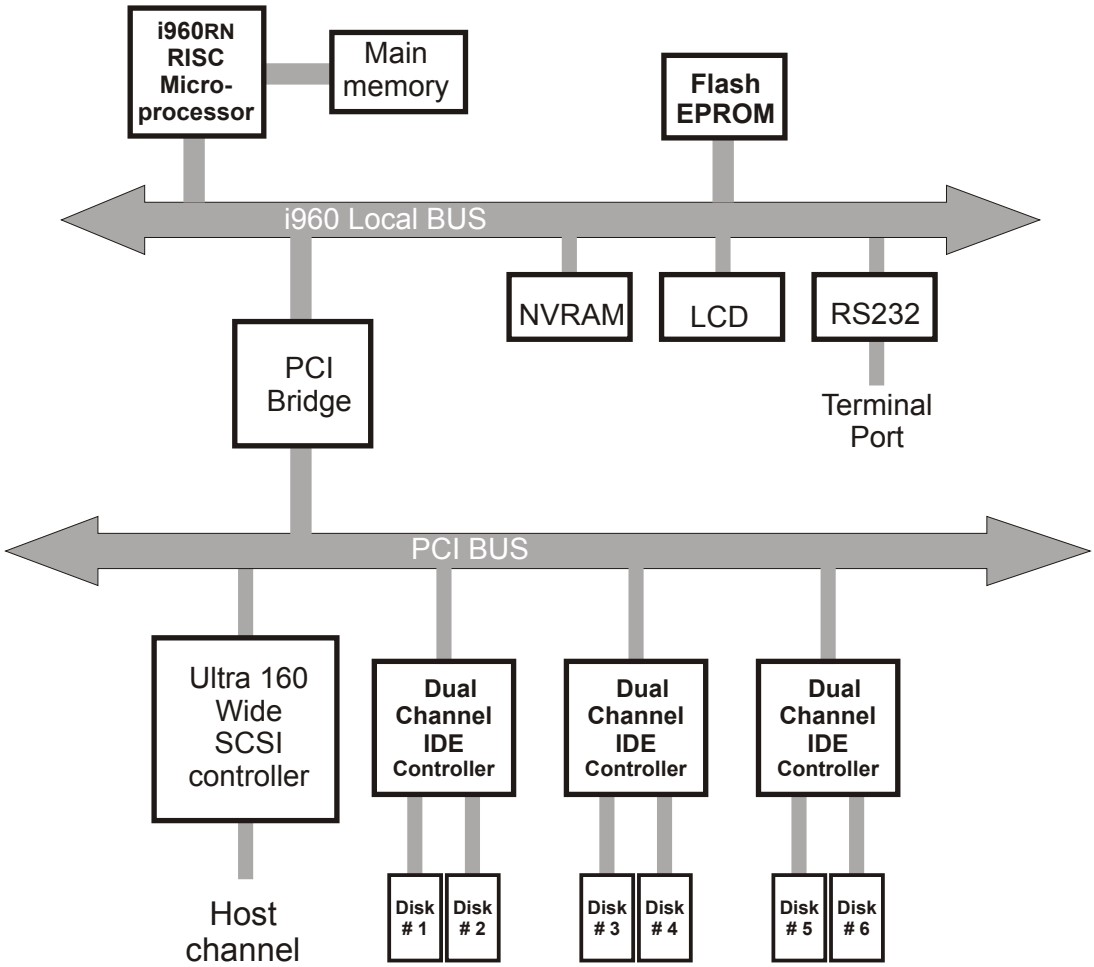

Updating Firmware

1. Setup your VT100 Terminal

Please configure the VT100 terminal setting to the values shown below :

VT100 terminal (or compatible) set up

Connection	Serial Port (COM1 or COM2)
Protocol	RS232 (Asynchronous)
Cabling	Null-Modem cable
Baud Rate	115,200
Data Bits	8
Stop Bit	1
Parity	None

Setup VT100 Terminal

Example : Setup VT100 Terminal in Windows® 95

Step 1.

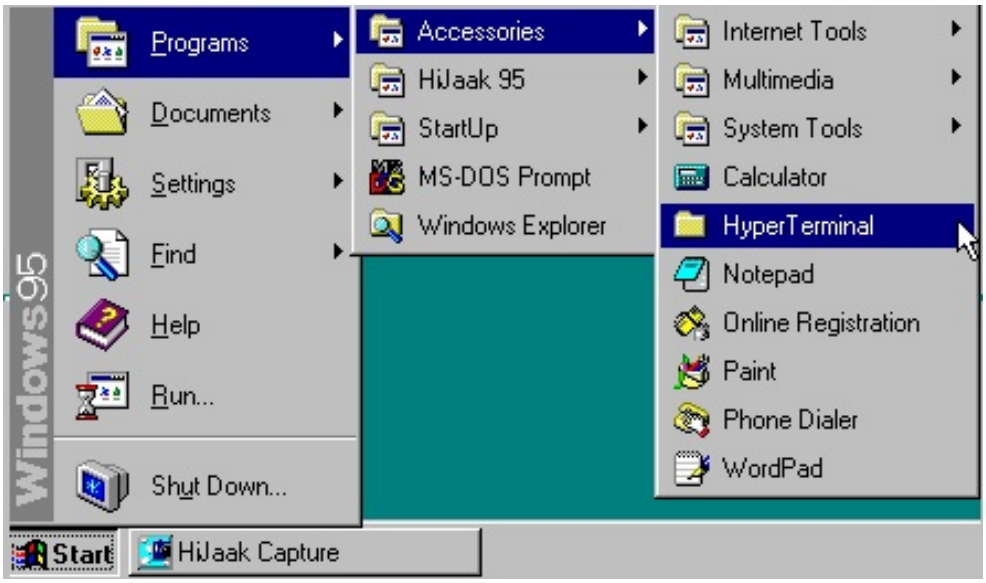

Step 2.

HyperTerminal
File Edit View Help
AT&T Mail
CompuServe
test
MCI Mail
Hypertrm
1 object(s) selected
6.00KB

Step 3. Enter a name for your Terminal.

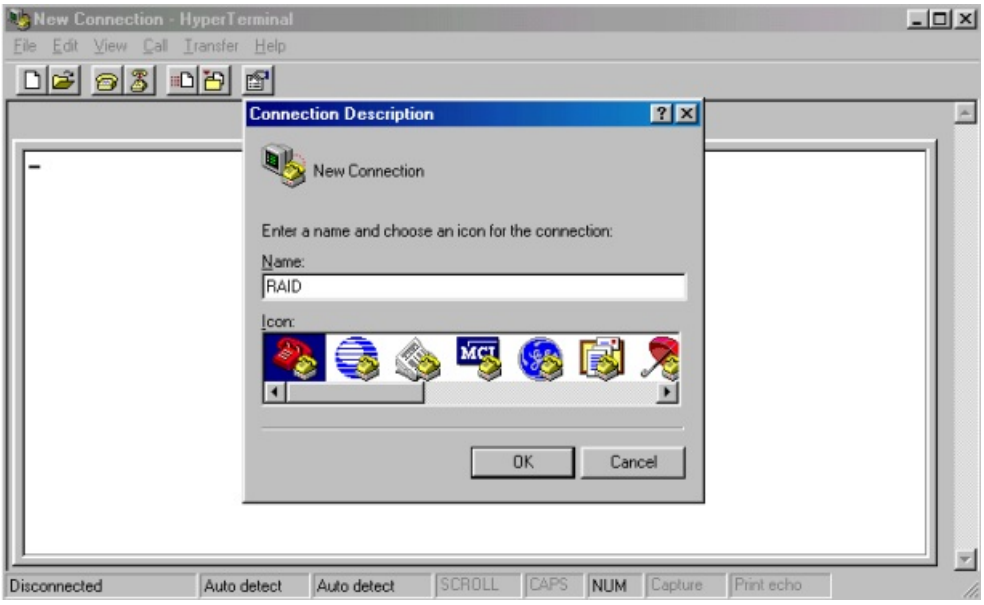

Step 4. Select a connecting port in your Terminal.

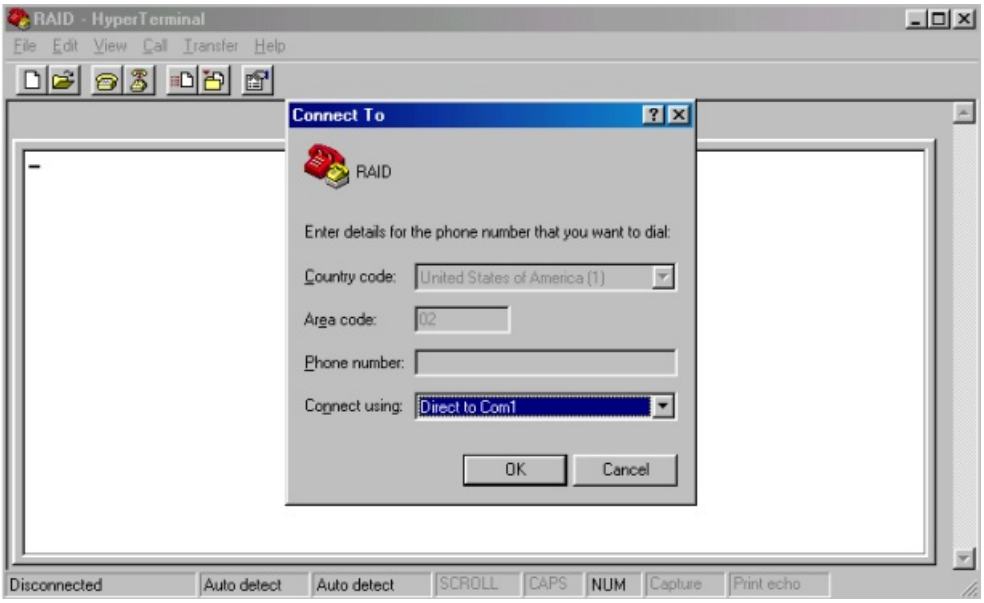

Step 5. Port parameter settings

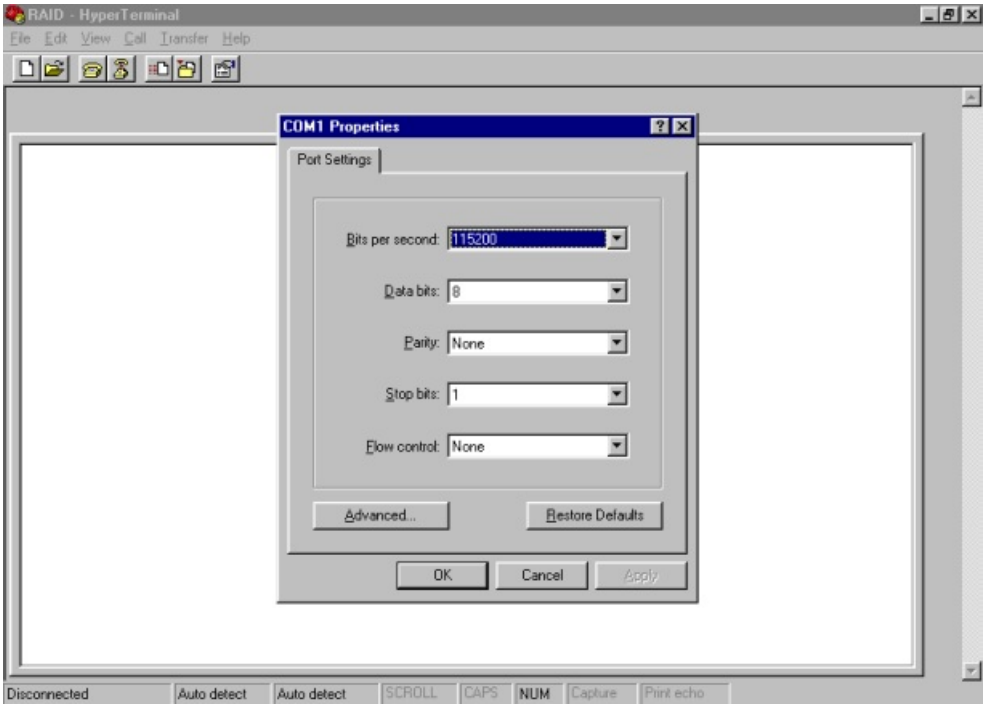

Step 6.

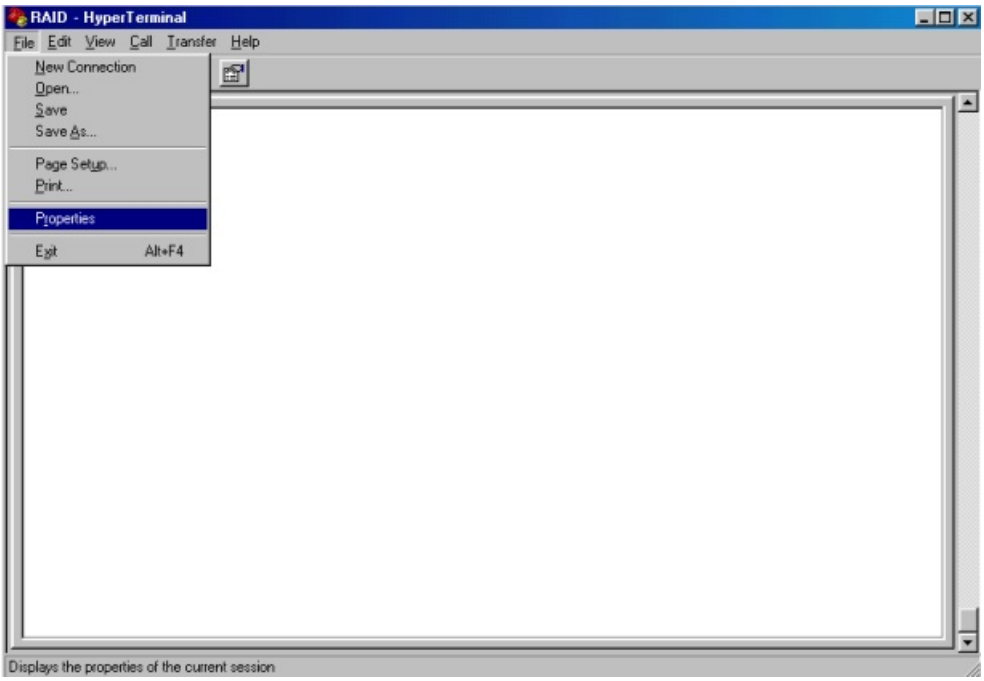
RAID - HyperTerminal
File Edit View Call Transfer Help
New Connection
Open...
Save
Save As...
Page Setup...
Print...
Properties
Exit Alt+F4
Displays the properties of the current session

Step 7. Select emulate VT100 mode

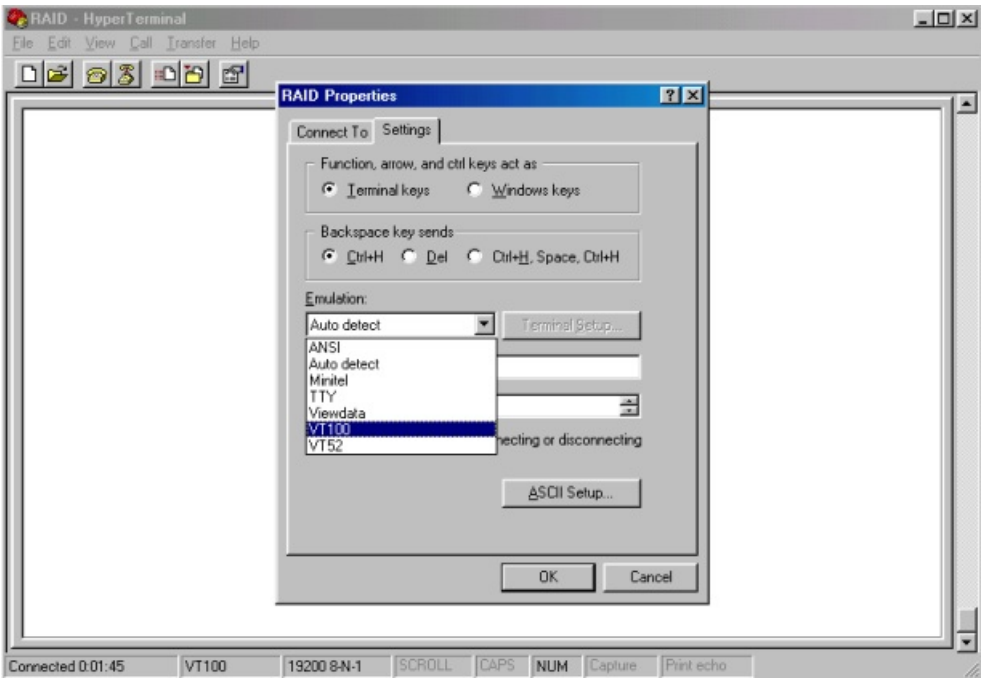

After you have finished the VT100 Terminal setup, you may restart your Disk Array and press " Ctrl + D " keys (in your Terminal)to link the Disk Array and Terminal together.

Press Ctrl + D to display the disk array Monitor Utility screen on your VT100 Terminal.

Start to Update Firmware

1. Move the cursor to " **Update ROM** " and press "Enter".

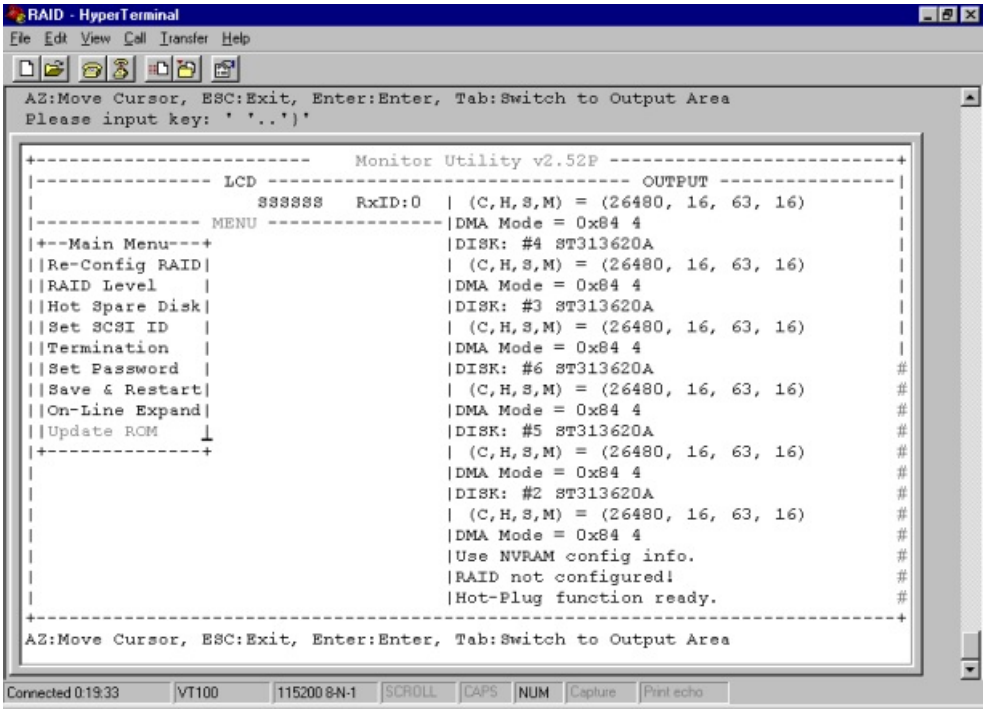

Warning !

Unpredictable results will occur if firmware update is attempted during Host computer and Disk Array activity. All activity to the controller should be stopped before updating firmware.

2. Press " **Y** " to download the new firmware and press " **Y** " again to confirm the Update.

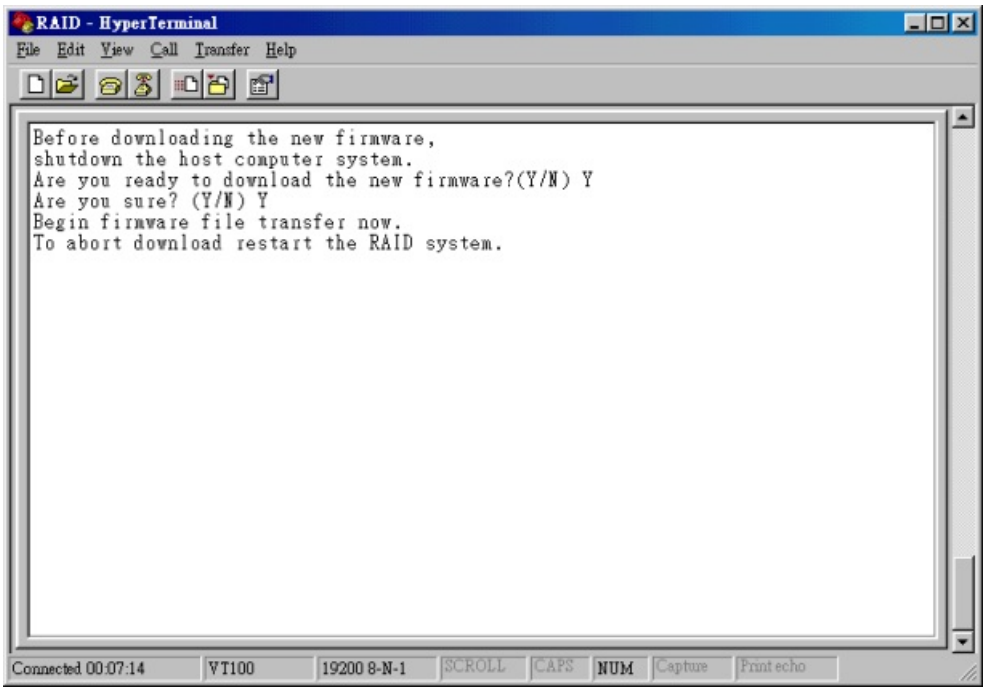

3. Select transfer " **Send Text File** " and press Enter.

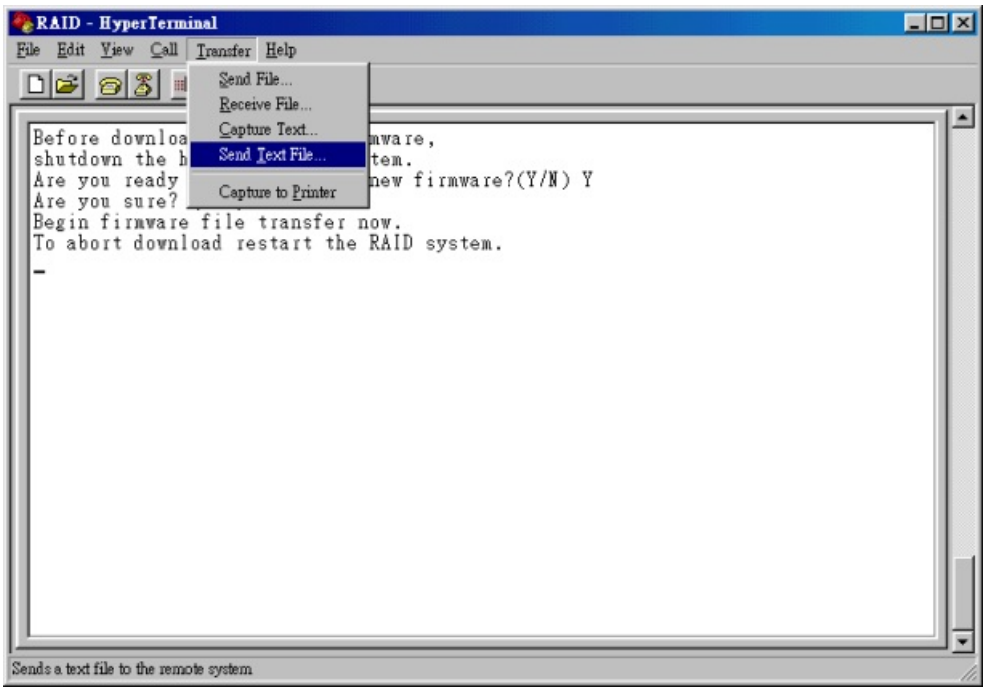

4. Locate the new Firmware file on your PC.

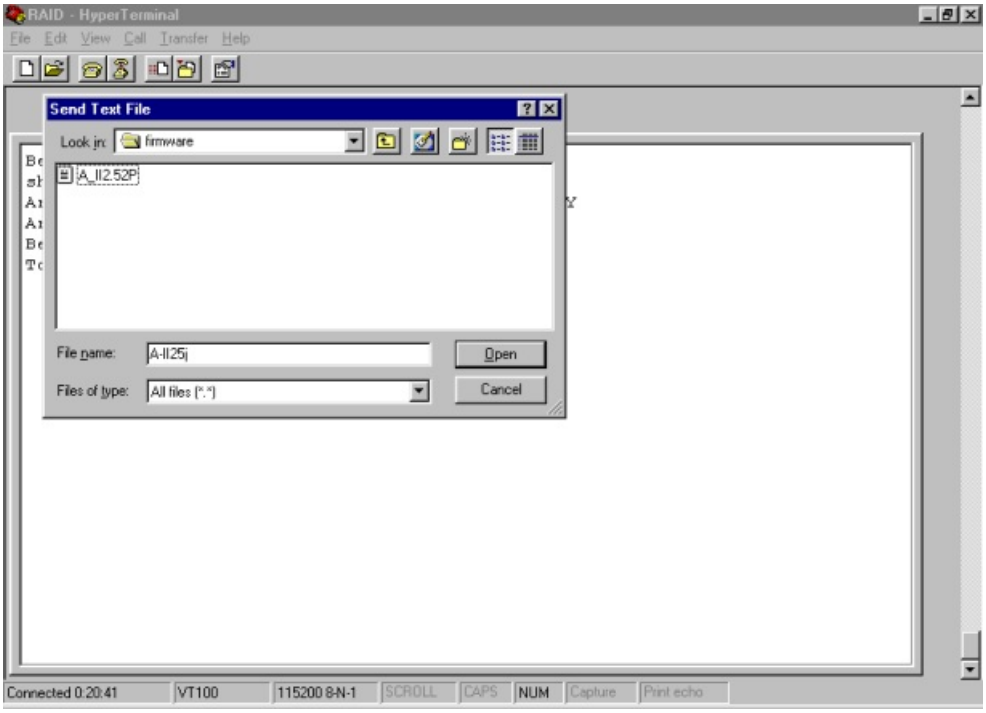

5. Press " **Go** " to confirm to download the new firmware.

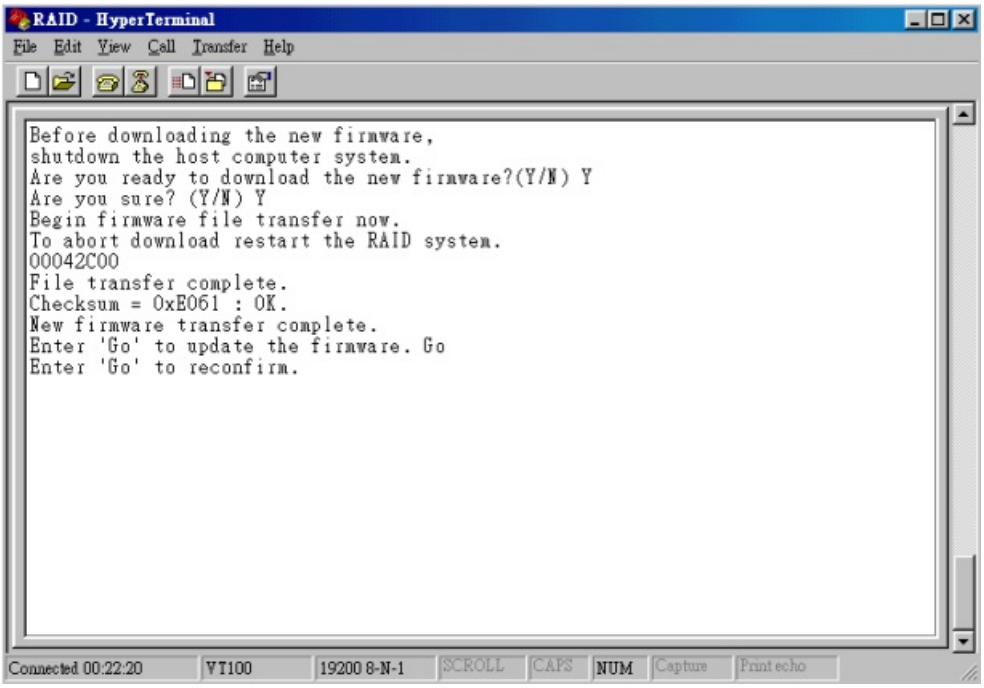

6. Type " **Go** " to reconfirm and the firmware will begin to be reprogrammed.

7. After verifying, please **restart the Disk Array** to activate the new firmware.

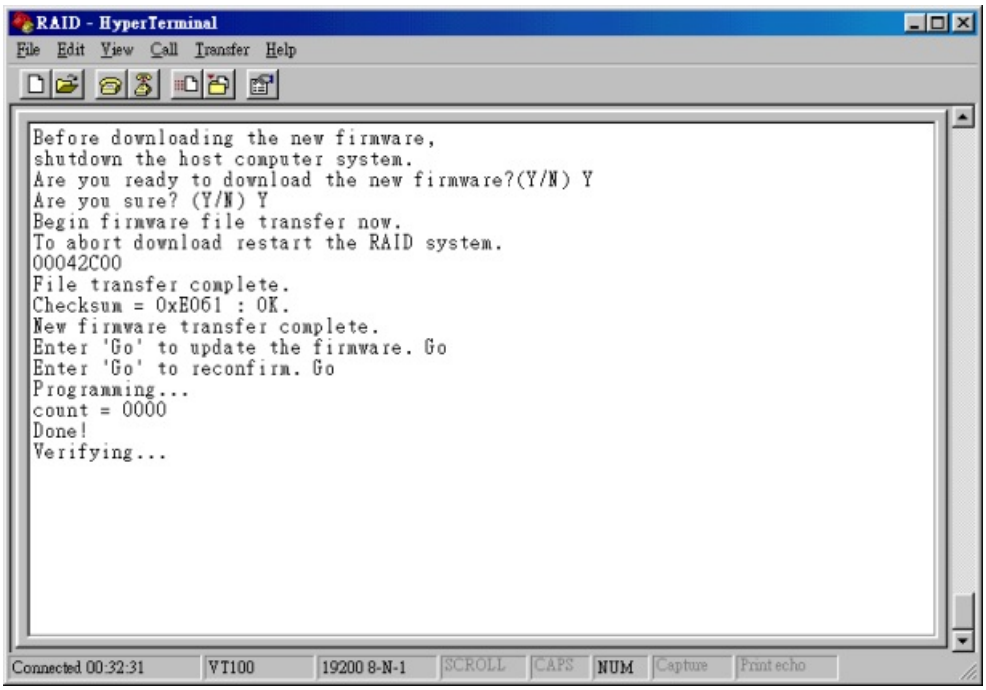

Capacity Expansion

The RAID capacity can be expanded by add one or more Disk Drive into the existing RAID group and properly setup procedures.

1. Add new HDD into the RAID system.

2. Configuration through the RS-232 Terminal mode, move the cursor to " **On-Line Expand** " and " **Enable** " and press " **Enter** " to confirm it.

(If you have not add any new HDD into the RAID group the " **Enable** " item will not show up.)

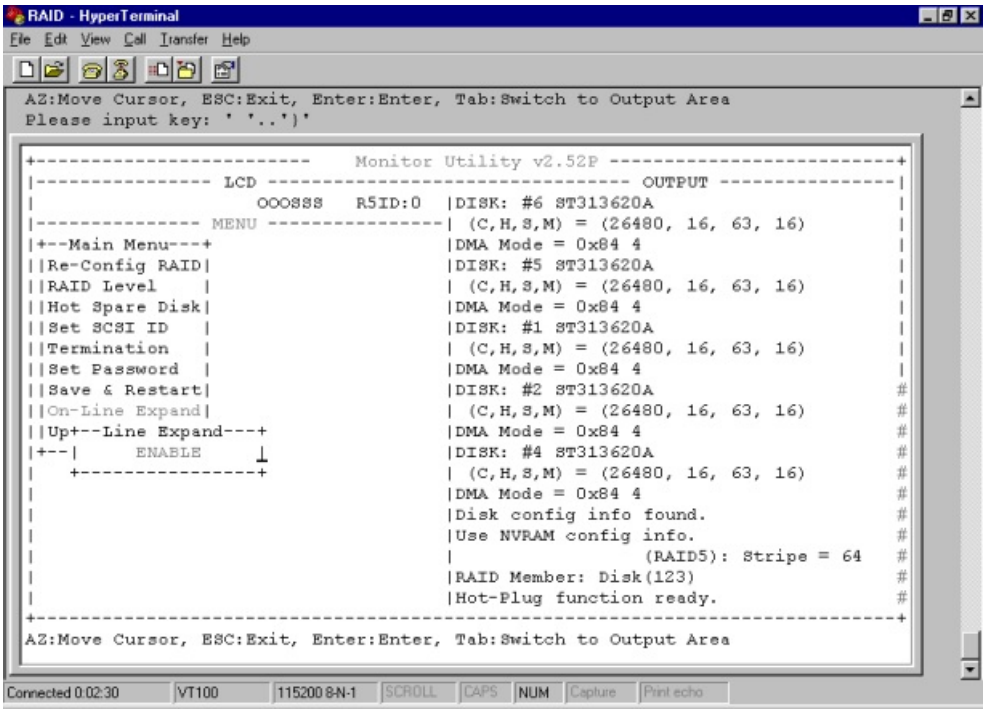

3. Select the " Save & Restart " function and press " **Enter** " to save and activate your selection.

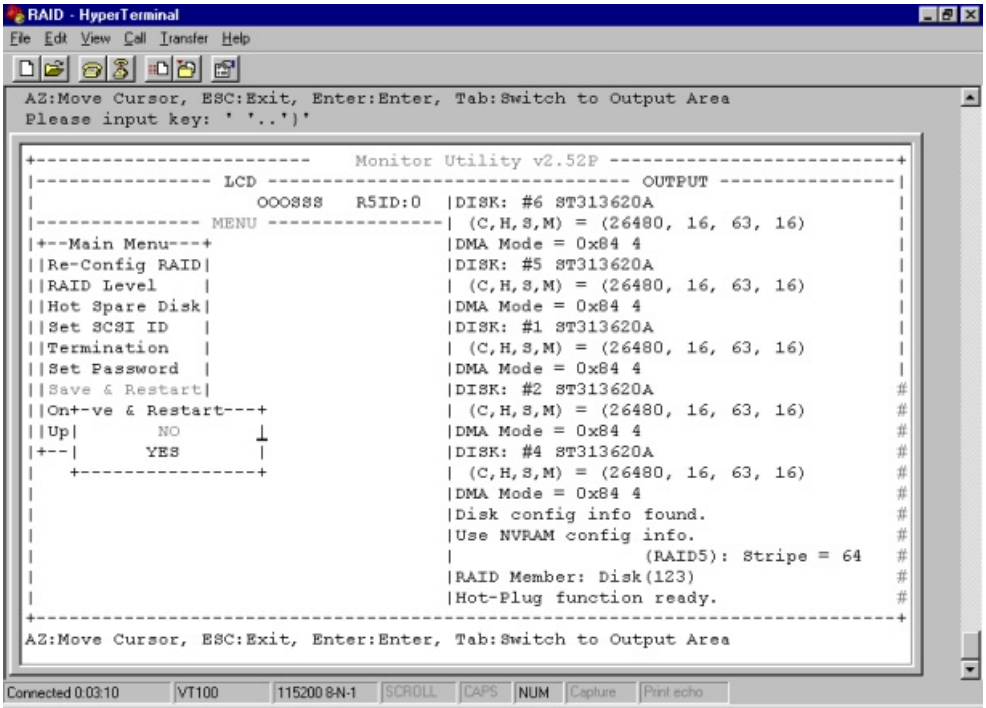

Chapter 5 : " Hot Swap "

This chapter explains how to remove and install the "Hot-Swap" parts without interrupting the data access while the disk array is on.

The "Hot-Swap" parts include :

- Hard Disk Drives
- Redundant Power Supply Units
- Cooling Fans

Follow the steps below and refer to the diagrams to remove and install the "Hot-Swap" parts.

Removing / Installing Hard Disk drives

a. Unlock the HDD tray

(When a HDD error occurs, the HDD LED indicator lights up "RED")

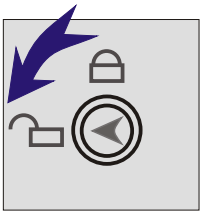

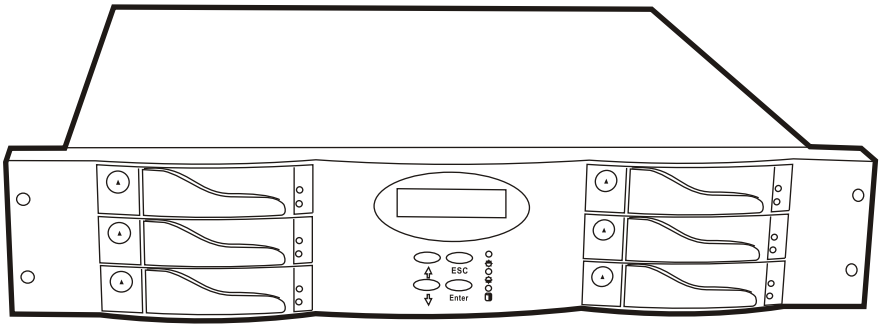

Figure : Swap HDD (Unlock)

b. Gently pull-out the HDD tray

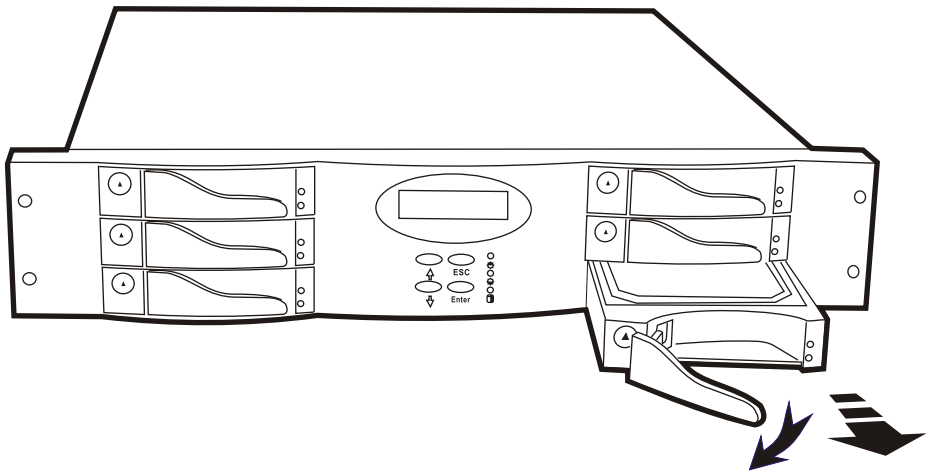

Figure : Swap HDD (Pull-out)

c. Unscrew and unplug the cables

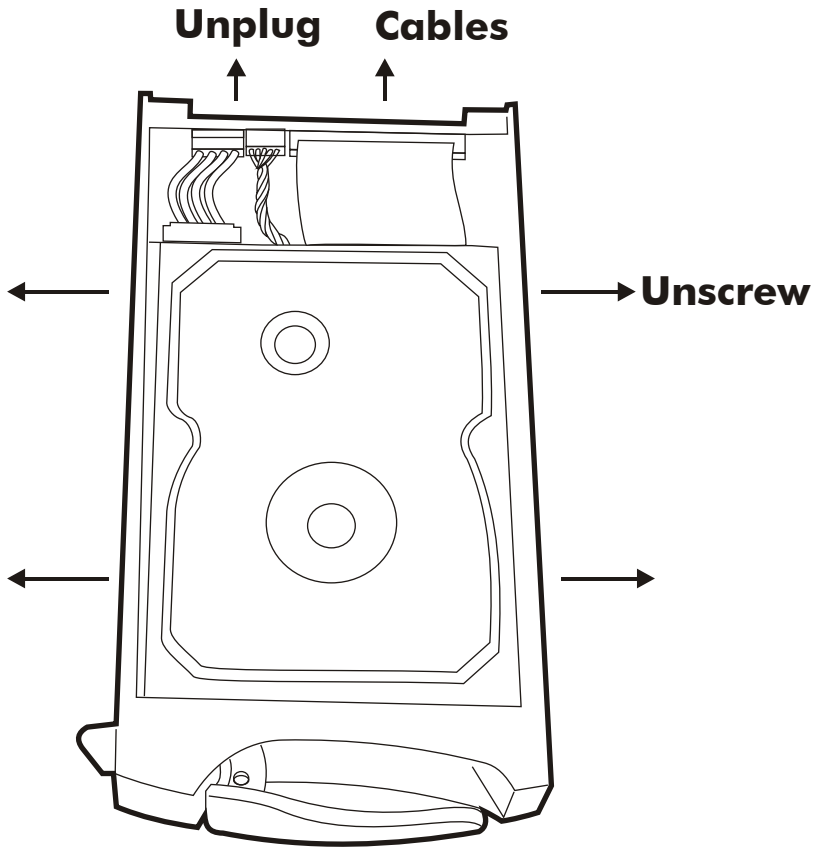

Figure : Swap HDD (Unplug cables)

d. Replace with a new Hard Disk Drive

It must be same capacity or greater than the faulty drive, if you replace with a Hard disk Drive of insufficient capacity, the Disk Array's built-in buzzer will sound and the intelligent Auto-Rebuild function will not be started.

* For best performance, we recommend you swap with an identical Hard Disk Drive.

e. Gently Slide-in the HDD tray and lock up to start the Auto-Rebuild

When you have installed the replacement disk drive, screw in all the screws and plug in the cables, you may now gently slide in the HDD tray into the chassis and lock up it.

* Data Auto-Rebuild will be started automatically when you lock up the HDD tray.

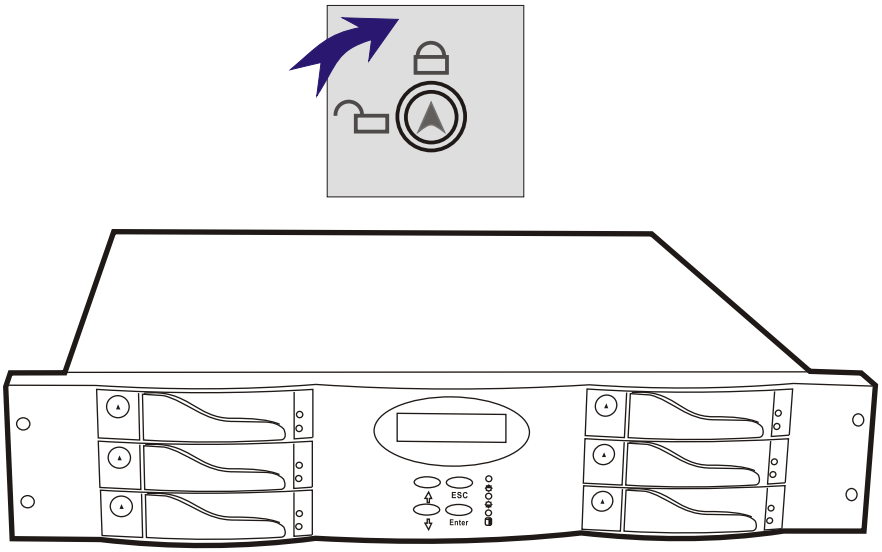

Figure : Swap HDD (Lock Up)

Removing / Installing the Redundant P/S Unit

There are two LED indicators on the front panel which display the status of the redundant power supplies. While the power supply is working properly the two LED indicators light up " Green ", if any one of them fail, the LED indicator will go off and the redundant power supply buzzer alarm will sound.

When you need to replace the redundant power supply unit , refer to the redundant power supply status LED indicator on the front panel to find the failed power supply unit and follow these steps to swap it.

a. Unscrew the faulty unit

(For Safety reasons, you should switch off the faulty unit's power switch)

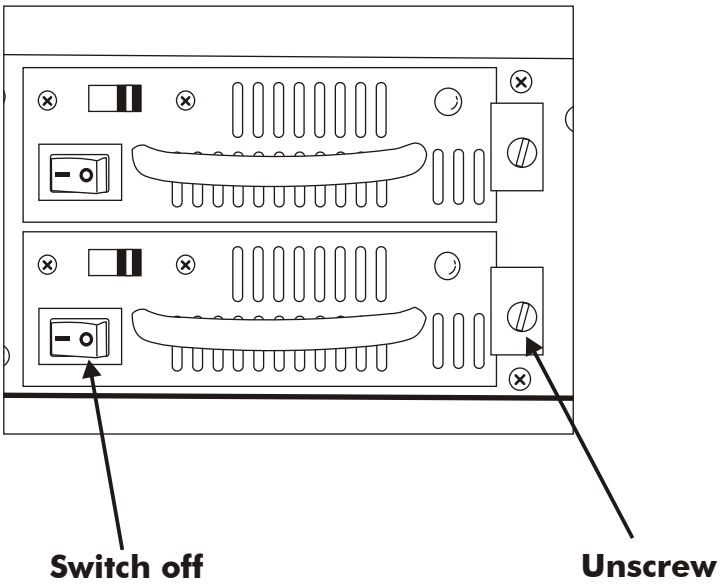

Figure : Swap P/S unit (Unscrew)

b. Replace with a new power supply unit

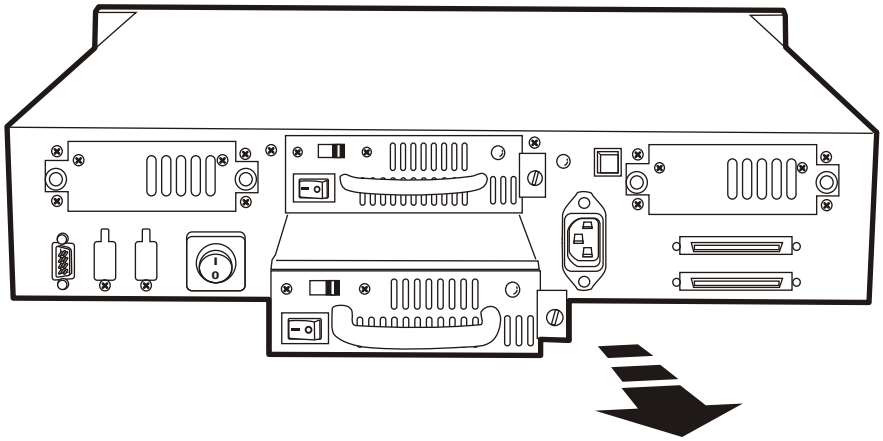

Figure : Swap P/S unit (swap with a new unit)

c. Press the Power Supply Reset switch

When you replace a new power supply unit, you should then push the power supply reset switch on the power supply to stop the buzzer alarm and link the two power supply units together.

◎The new power supply unit will link with the other unit immediately and will start working after you press the power supply reset switch, and the buzzer warning noise will stop.

• Reset from the rear panel

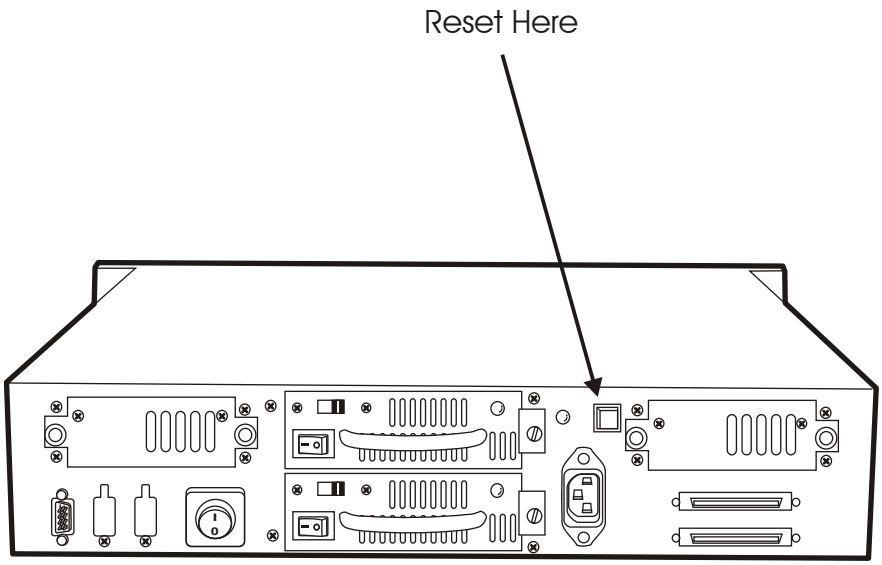

Removing / Installing Cooling Fans

• Unscrew the Fan door and open the door.

! Caution : Be careful , the high speed rotating fans may harm you. Don't touch the rotating Fans, If necessary, Unplug the Fan power connector first.

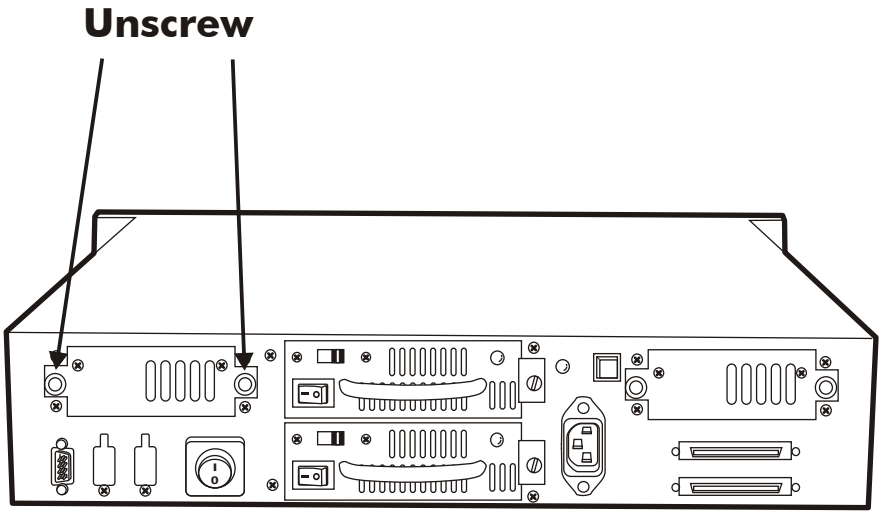

Figure : Swap cooling Fan (Unscrew the Fan Door)

- Unplug the Fan connector
- Unscrew the faulty cooling fan and replace with a good one

☆**Important !** The cooling fan's air flow must point to the fan door, please refer to the label on the cooling fan.

- Plug in the fan connector, close the fan door and screw it in

! Caution : The cooling fan will rotate immediately when you plug in the fan power connector.

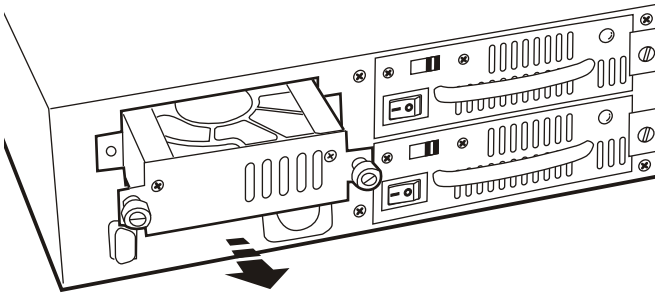

Figure : Swap Cooling Fan (swap with a new Fan)

Technical Specifications

Microprocessor	Intel i960 RN (64-bit RISC processor)
Cache Memory	64MB* Maximum 128MB
DRAM Slots	One
Module Type	144 Pin DIMM
DRAM Type	SDRAM
DRAM Speed	60ns
RAS access time	
CAS access time	
Parity	Non-Parity
Read Cache	Read-Ahead
Write Cache	Write Back*
Firmware	Flash EEPROM ,256K x 8
SCSI I/O Processor	LSI SYM53C1010
Serial Port	1x RS232 (Asynchronous) Port
Baud Rate	115,200 (Bits Per Second)
Data Bits	8
Stop Bit	1
Parity	None
RAID Levels	0 , 1 , 0+1, 3 or 5
Data Transfer Rate	Up to 160MB/s (Synchronous)
SCSI ID Assignment	0 ~ 14 (0*)
Tagged-command queuing	Up to 255 simultaneous data requests

Interface : Host Channel	1* Ultra 160 LVD SCSI (68 pin)
Disk Channels	6* EIDE ATA-100
Drives	Hot Swap, User Replaceable Up to Six 3.5" drives (1" height)
Maximum Fault Tolerant Capacity	>400GB
Drive MTBF	>1,000,000 hrs
Host Requirement	Host Independent
Operating Systems	O/S Independent and Transparent
Data Rebuild	Automatic Data Regeneration
LCD Display Panel	2 x 16 Characters
Cooling Fans	6cm Ball Bearing Fan 4 Fans
Power Supply Capacity	Dual 250W Independent Power Supplies
AC Input Voltage	115 / 230V (+/10%) , 60/50 Hz
Environmental	
Relative Humidity	10% to 85% Non-condensing
Temperature Operating :	5℃～ 40℃
Storage :	-25℃～ 60℃
Safety testing	UL, CE and FCC Class B
Dimensions	483mm(W) * 465mm(D) * 88mm(H)
Weight	12 kgs (W/O Disk Drive)

" * " Default Settings

*** Various trademarks belong to their respective owners.