Chapter 2 : " Getting Started "

General Overview

This chapter helps you get ready to use the Disk Array. It gives you :

- Unpacking & Checklist
- Choosing a place for Disk Array
- Identifying Parts of Disk Array
- Power Source
- Installing the Hard Disk Drives
- Host Linkage
- Power-On and Self-test
- LED Display and Function Keys
- LCD Status Display

The following illustrations will help you read the further sections.

Special Note :

RAID should never be considered a replacement for doing regular backup. It's highly recommended to conduct a backup strategy for critical data.

Unpacking & Checklist

Before unpacking your Disk Array , prepare a clean and stable place to put the contents of your Disk Array's shipping container on. Altogether, you should find the following items in the package :

- The Disk Array
- AC power cord
- One External SCSI cable
- Keys (For HDD Trays)
- User Guide
- RS-232 Cable
- Active Terminator

Remove all the items from the carton. If anything is missing or broken , please inform your dealer immediately.
Save the cartons and packing materials that came with the Disk Array. Use these materials for shipping or transporting the Disk Array.

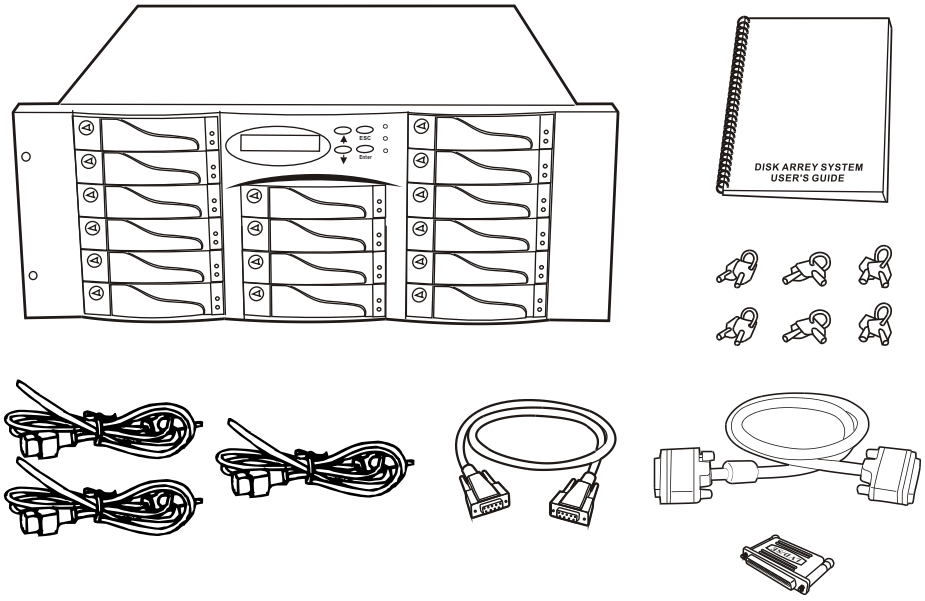

Figure : Checklist

Choosing a place for Disk Array

When selecting a place to set up your Disk Array, be sure to follow the guidelines as below:

- Place on a flat and stable surface.
- Use a stand that supports at least 50 kgs for this Disk Array. (HDD included)
- Place the Disk Array close enough to the computer for the Disk Array's External SCSI cable to reach it.
- Use a grounded wall outlet.
- Avoid an electrical outlet controlled by wall switches or automatic timers. Accidental disruption of the power source may wipe out data in the memory of your computer or Disk Array.
- Keep the entire system away from potential sources of electromagnetic interference, such as loudspeakers , cordless telephones, etc.
- Caution !
  Avoid direct sunlight, excessive heat, moisture, or dust.

Identifying Parts of the Disk Array

Front View

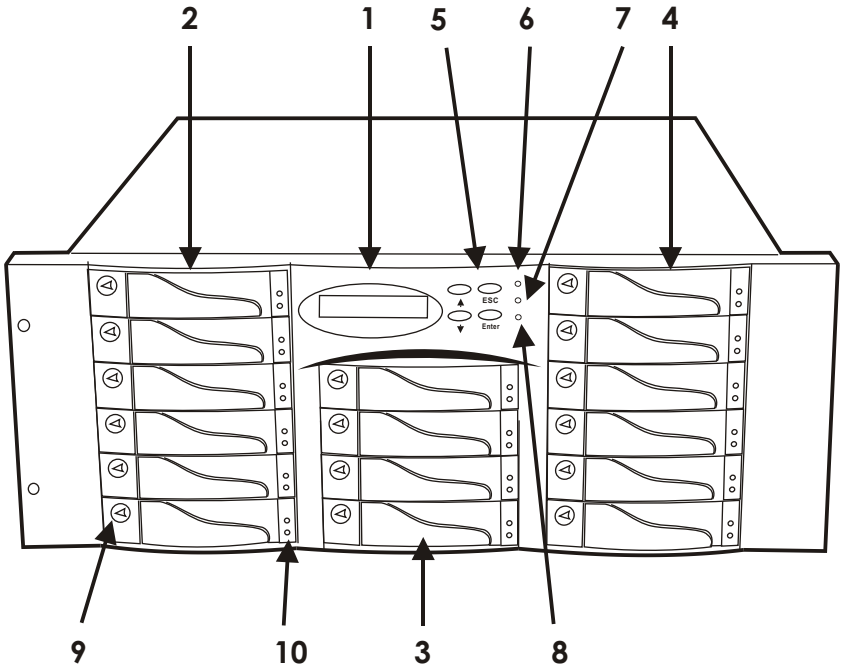

Figure : Front View

1. LCD Status Display Panel
2. HDD Trays 1 ~ 6 (From Up to Down)
3. HDD Trays 7 & 10
4. HDD Trays 11 ~16
5. Function Keys (↑ , ↓ , Enter , ESC)
6. Power-On Indicator (Green)
7. Power Fail Indicator (Red)
8. Host Computer Access Indicator (Yellow)
9. HDD Tray Lock (Lock / Unlock)
10. HDD Status Indicator
    (Error (Red), Access (Yellow), Power-On (Green))

REAR VIEW

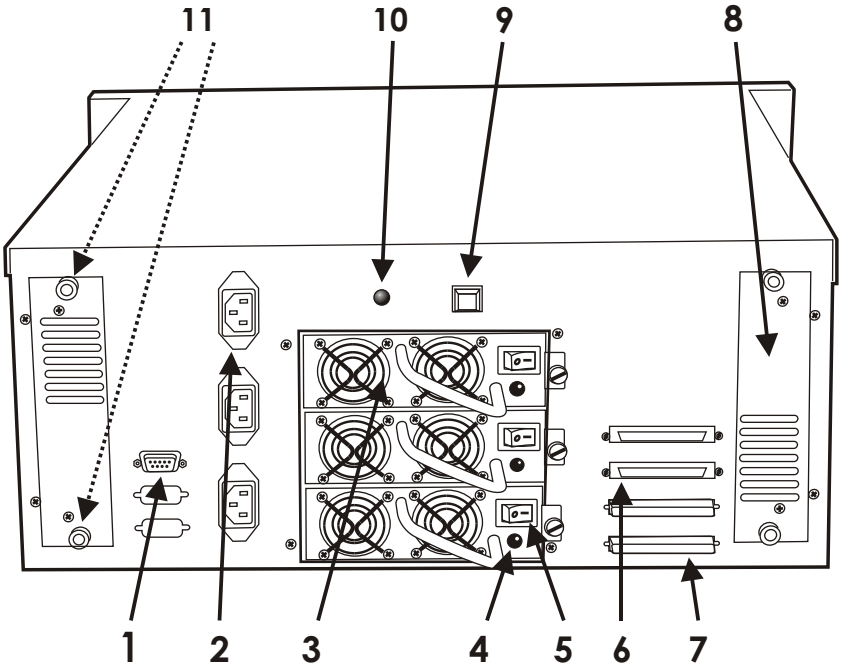

Figure : Rear View

1. RS-232 Adapter (Terminal Port)
2. AC Power Input Sockets #1～3 (from up to down)
3. Power Supply Unit #1～3 (from up to down)
4. Power Supply "**Power-On**" Indicator (Green)
5. Power Supply Unit On / Off Switch (0 / I)
6. SCSI Channel Port ------ (Host 1)
7. SCSI Channel Port ------ (Host 2)
8. Cooling Fan
9. Power Supply "**Alarm**" Reset Button
10. Power Supply Fail Indicator (Red)
11. Cooling Fan Screws

Power Source

Working Voltage

The system can run either on AC 115V (+/10%) or AC 230V (+/10%) environment.
The system's power supply provide full range AC electricity input from AC 90Volt to 260Volt.

Warning !

Wrong AC Voltage input will harm the power supply and cause serious damage to the Disk Array.

! This Disk Array must be grounded

This Disk Array is supplied with an AC power cord equipped with a 3-wire grounding type plug. This is a safety feature and it is important to only use a 3-wire grounded mains power cord.

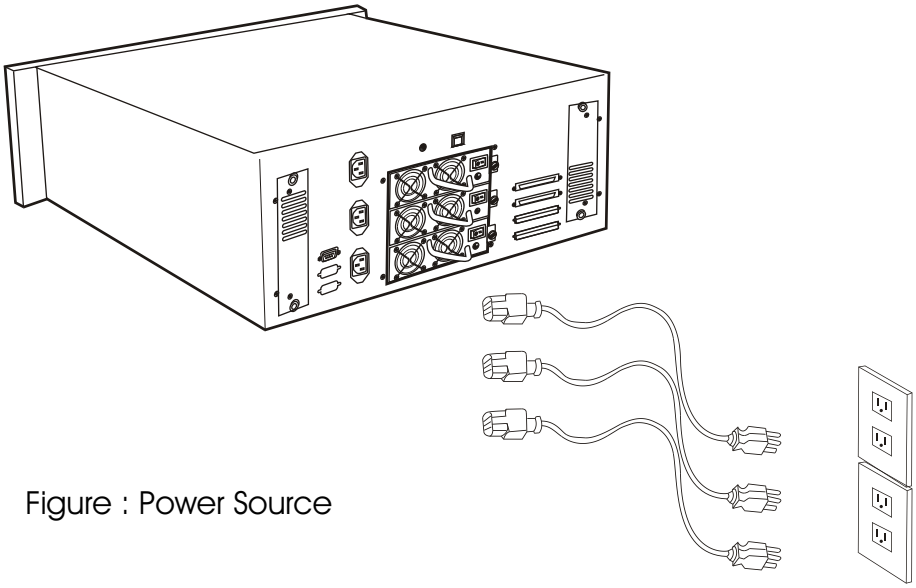

Figure : Power Source

Installing the Hard Disk Drives

Step 1 : Unlock the HDD tray by turning the Key-lock to the correct position.
Step 2 : Gently Pull out the HDD tray.

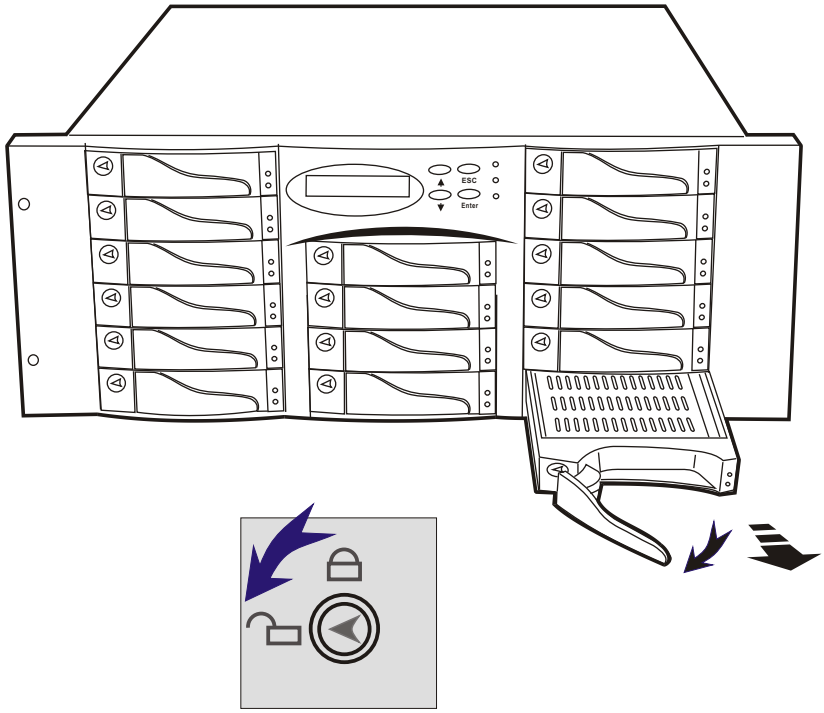

Figure : Installing HDD step 1, 2

Step 3 : Insert HDD into the tray

Step 4 : Screw in the hard drive.
(Use the correct size, type and thread)

Step 5 : Cabling, Connect the Data cable and Power cable.

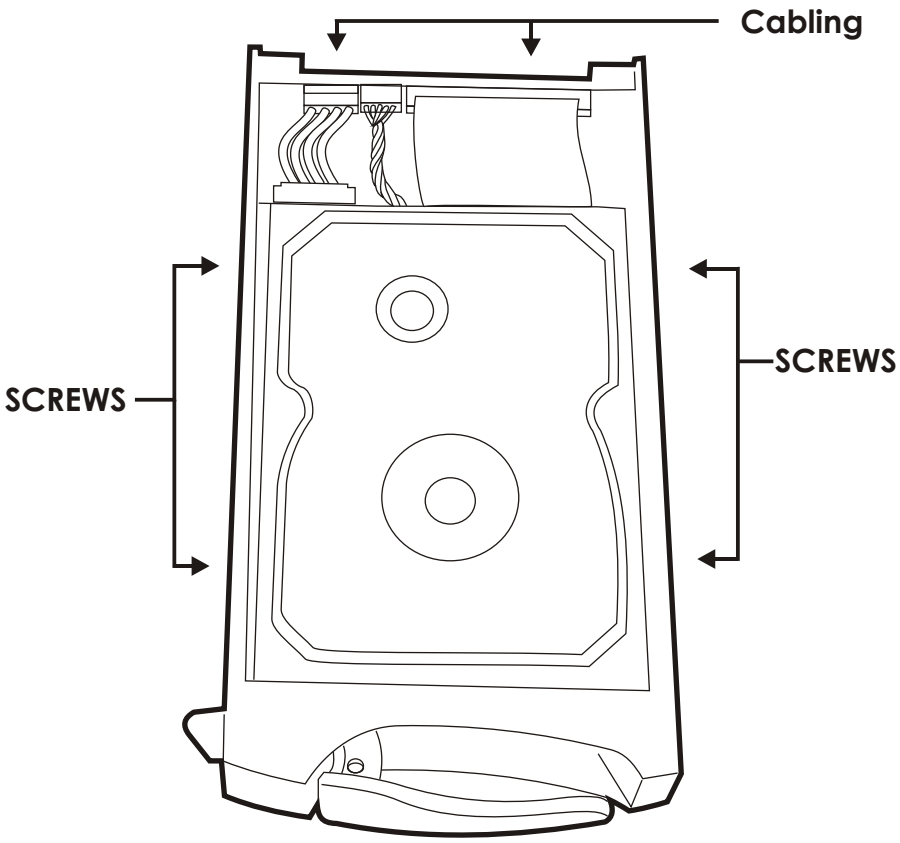

Figure : Installing HDD step 3, 4, 5

Step 6 : Gently slide in the HDD tray.

Step 7 : Lock the HDD tray. When powered on, the Green LED will light up.

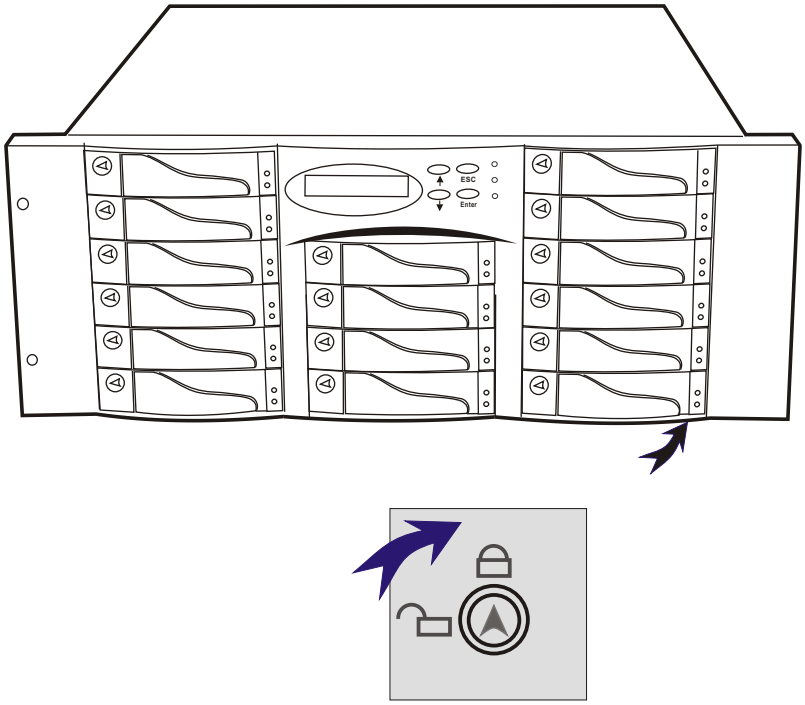

Figure : Installing HDD step 6, 7

Host Linkage

With the HDD(s) installed correctly, you are ready to connect the Disk Array to your Host computer.
Use a shielded twisted-pair SCSI cable to connect your Host computer to the Disk Array's built-in 68 pin SCSI adapter port.

Connect the Host computer as shown below :

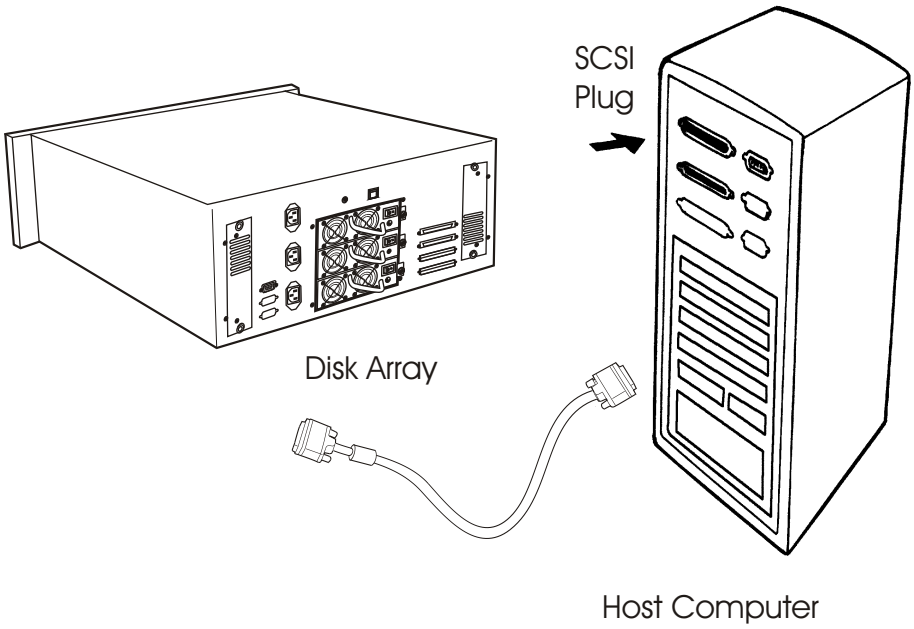

Figure : Host linkage

Caution !
For safety reasons, make sure the Disk Array and Host Computer are turned off when you plug-in the SCSI cable.

Power-On and Self-Test

When you connect the Disk Array to the Host computer, You should press the ON/OFF Switch (o / I) on all of the power supply Hot-Swap units and It will turn the Disk Array on and the Self-Test will be started automatically.

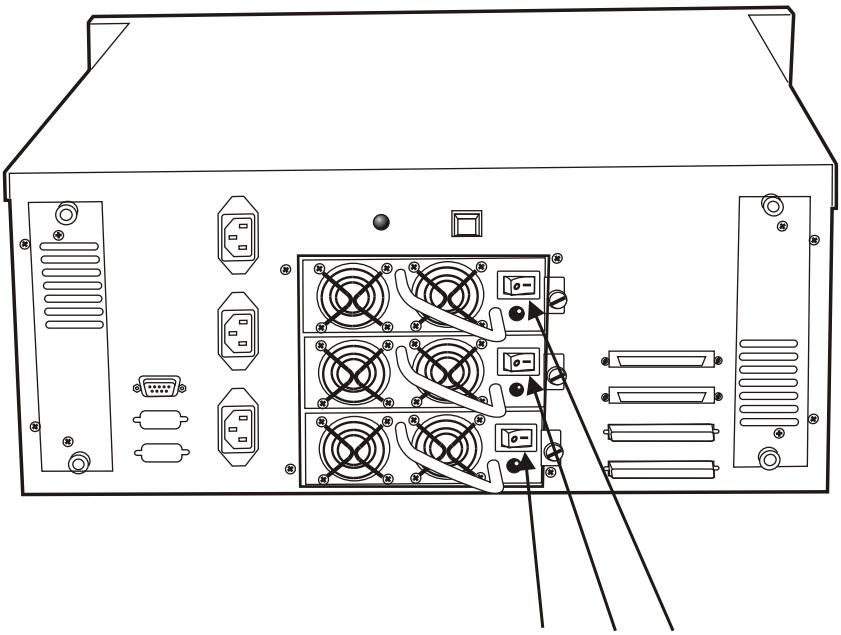

Power Supply Unit's On / Off Switch

LED Display & Function Keys

◎LED Display

Shown below is the LED Display. Please refer to the illustration, the LEDs inform you of the Disk Array's current operating status. Upon activating a certain function, the corresponding LED indicator should turn on indicating that the feature is engaged.

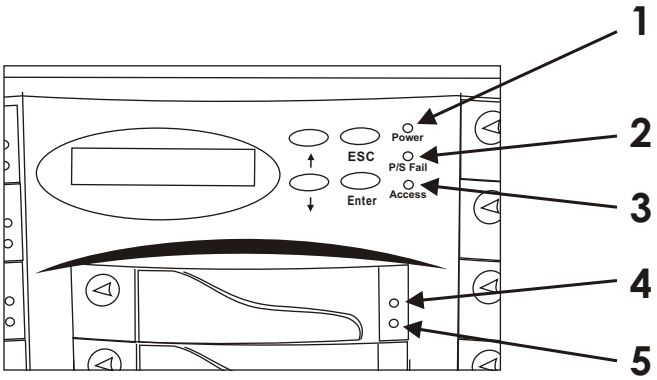

Figure : LED Display

LED	Descriptions
1. Power On Indicator	light up : "Green" , it lights when the Power source is plugged and system is on.
2. P/S Fail Indicator (Power Supply Fail)	light up : "Red" , it lights when any one of the Power Unit failed.
3. Host Computer Access Indicator	light up : "Yellow" , Indicates Host computer is currently accessing the Disk Array
4. HDD Power-On Indicator HDD Error Indicator	light up : "Green" , It lights when the HDD tray is locked and Power-On light up : "Red" , when the HDD not installed or error.
5. HDD Access Indicator	light up : "Yellow" , when HDD is accessed

Function Keys

The four function keys at the top of the front panel perform the following functions :

(↑) Up Arrow / Right Arrow	Use to scroll the cursor Upward / Rightward
(↓) Down Arrow / Left Arrow	Use to scroll the cursor Downward / Leftward
(Enter)	Use to confirm a selected item
(ESC)	Use to exit a selection

LCD Status Panel

Located the LCD panel, the LCD status panel informs you of the Disk Array's current operating status at a glance. Upon activating a certain function, a symbol or icon corresponding to that function will appear in the display window. The symbol will remain in the display window indicating the status of the Disk Array.

Identifying the status on the LCD

The following illustration shows the symbols (characters) been used and their representation.
A description of each of the symbols in LCD display window :

O	On-line and functional
R	Error occur (Fault)
I	Identifying Disk Drive
S	Spare Disk Drive
X	Disk Drive not installed
W	Warning : Disk Drive with too many Bad Sectors
A	Add new Disk Drive when On-Line Expansion

Example of the LCD status display window :

OOOOOOOOOOOOSSXX

This informs you :
a. HDD 1 ~ HDD 12 : On-line
b. HDD 13&14 : Hot-Spare disk drive
c. HDD 15&16 : Not installed