TEST REPORT
FROM
RADIO FREQUENCY
INVESTIGATION LTD.

Test Of: Madge Networks Ltd.
Low Profile PC Card PCI-5

To: FCC Part 15: 1998 Class B

Test Report Serial No:
RFI/EMCB1/RP41115ETF01B

This Test Report Is Issued Under The Authority Of Brian Watson Technical Director:	**Checked By:**
Tested By:	**Release Version No: PDF01**
Issue Date: 6 July 2000	**Test Date: 27 June 2000**

This report is issued in Adobe Acrobat portable document format (PDF). It is only a valid copy of the report if it is being viewed in PDF format with the following security options not allowed: Changing the document, Selecting text and graphics, Adding or changing notes and form fields. Furthermore, the date of creation must match the issue date stated above.
This report may be copied in full.

Radio Frequency Investigation Ltd, Ewhurst Park, Ramsdell, Basingstoke, Hampshire, RG26 5RQ, ENGLAND. Tel: +44 (0) 1256 851193 Fax: +44 (0) 1256 851192	Registered in England, No. 211 7901. Registered Office: Ewhurst Park, Ramsdell, Basingstoke, Hampshire RG26 5RQ	UKAS TESTING TESTING 0644

This page has been left intentionally blank.

Table of Contents

1. Client Information 4
2. Equipment Under Test (EUT).....5
3. Test Specification, Methods & Procedures 9
4. Deviations From The Test Specification.....10
5. Operation Of The EUT During Testing 11
6. Summary Of Test Results.....12
7. Measurements, Examinations And Derived Results.....13
8. Measurement Uncertainty.....18
Appendix 1. Test Equipment Used.....19
Appendix 2. Measurement Methods 20
Appendix 3. Test Configuration Drawings 22
Appendix 4. Photographs of EUT.....26

1. Client Information

Company Name:	Madge Networks Ltd.
Address:	Wexham Springs Framewood Road Wexham Slough SL3 6PJ Berks.
Contact Name:	Mr Jason Borland.

2. Equipment Under Test (EUT)

The following information (with the exception of the Date of Receipt) has been supplied by the client:

2.1. Identification Of Equipment Under Test (EUT)

Brand Name	Madge
Model Name or Number	PCI-5
Unique Type Identification	151-336-01
Serial Number	5B
Country Of Manufacture	UK
F.C.C. ID Number	NKHPC15
Date Of Receipt	27 June 2000

2.2. Description Of EUT

The card (EUT) provides an interface between a personal computer and a Token Ring Network.

2.3. Modifications Incorporated In EUT

None.

2.4. Additional Information Related To Testing

Power Supply Requirement:	Nominal 115 V, 60 Hz AC Mains Supply 13 Amp (max)
Intended Operating Environment:	Commercial, Light industry
Weight:	150g
Dimensions:	PCB 130 x 80mm
Interface Ports:	Two Token Ring Ports: one subminiture-D and one RJ45, Either of which may be used at any one time. The subminiture-D supports IBM STP cable. The RJ45 supports either category 3 to 5 STP or category 3 to 5 UTP. The EUT is internal to the support computer and is connected to the PCI bus expansion slot.
Cycle Time:	Less than 1 sec.

2.5. Support Equipment

The following support equipment was used to exercise the EUT during testing:

Description	PC
Brand Name	Dell
Model Name or Number	Dimension XPS R400 (MMS)
Serial Number	13996
F.C.C. ID Number	Verified
Cable Length And Type	EUT internal to PC
Connected to Port	PCI bus slot

Description	SVGA Monitor
Brand Name	Hewlett Packard
Model Name or Number	D2817A
Serial Number	JP55006381
F.C.C. ID Number	ACJ93312120
Cable Length And Type	SVGA cable 2m
Connected to Port	SVGA port on support PC

Description	Keyboard
Brand Name	HP
Model Name or Number	E06333KUK001-C
Serial Number	J8021F1619
F.C.C. ID Number	Verified
Cable Length And Type	Integral 1.5m
Connected to Port	Keyboard mini DIN on support PC

Support Equipment (continued)

Description	Mouse
Brand Name	HP
Model Name or Number	M-S34
Serial Number	LZA710S8751
F.C.C. ID Number	DZL211029
Cable Length And Type	Integral 2m
Connected to Port	Mouse mini DIN on support PC

Description	Printer
Brand Name	Hewlett Packard
Model Name or Number	C2164A
Serial Number	ES573120MV
F.C.C. ID Number	B94C2164X
Cable Length And Type	Parallel to Centronics 1.5m
Connected to Port	Parallel port on PC

Description	Token Ring Switch
Brand Name	Madge Networks Ltd
Model Name or Number	Ringswitch Express
Serial Number	RSE002
F.C.C. ID Number	Verified
Cable Length And Type	6m UTP cable
Connected to Port	RJ45 socket on EUT

Description	Laptop Computer
Brand Name	DELL
Model Name or Number	Latitude Cpi A series
Serial Number	13634
F.C.C. ID Number	Verified
Cable Length And Type	EUT internal to PC
Connected to Port	Cardbus slot

Support Equipment (continued)

Description	Token Ring Adapter Card
Brand Name	Madge Networks Ltd
Model Name or Number	Cardbus MK2
Serial Number	D981CF
F.C.C. ID Number	Verified
Cable Length And Type	2m UTP cable, connected to Ringswitch
Connected to Port	Port 1:8 of Ringswitch Express

3. Test Specification, Methods & Procedures

3.1. Test Specification

Reference:	FCC Part 15: 1998 Class B
Title:	Code of Federal Regulations, Part 15 (47CFR15) Radio Frequency Devices: Digital Devices.
Comments:	A description of the test facility used for this test is on file with, and has been accepted by, the Federal Communications Commission as required by Section 2.948 of Federal Rules.
Purpose of Test:	To determine whether the equipment complied with the requirements of the specification for the purposes of verification.

3.2. Methods And Procedures

The methods and procedures used were as detailed in:

ANSI C63.2 (1987)
Title: American National Standard for Instrumentation - Electromagnetic noise and field strength.

ANSI C63.4 (1992)
Title: American National Standard Methods of Measurement of Electromagnetic Emissions from Low Voltage Electrical and Electronic Equipment in the Range of 9 kHz to 40 GHz.

ANSI C63.5 (1988)
Title: American National Standard for the Calibration of antennas used for Radiated Emission measurements in Electromagnetic Interference (EMI) control.

ANSI C63.7 (1988)
Title: American National Standard Guide for Construction of Open Area Test Sites for performing Radiated Emission Measurements.

CISPR 16-1 (1993)
Title: Specification for radio disturbance and immunity measuring apparatus and methods. Part 1. Radio disturbance and immunity measuring apparatus.

3.3. Definition Of Measurement Equipment

The measurement equipment used complied with the requirements of the standards referenced in the Methods & Procedures section above. Appendix 1 contains a list of the test equipment used.

4. Deviations From The Test Specification

At the request of the client, Radiated emission measurements were performed at an antenna to EUT distance of 10 metres.

5. Operation Of The EUT During Testing

5.1. Operating Conditions

The EUT was tested in a normal laboratory environment.

During testing, the EUT was powered by a nominal 115 V, 60 Hz AC Mains Supply 13 Amp (max)

5.2. Operating Modes

The EUT was tested in the following operating mode:

Transmitting and receiving data frames at a rate of 100 Mbit/s

The reason for choosing this mode was that it was defined by the client as being likely to be the worst case with regards EMC.

5.3. Configuration And Peripherals

The EUT was tested in the following configuration:

The EUT was fitted inside the Host PC. The monitor, printer, keyboard and mouse were connected to the Host PC. The EUT was in two way communication with the laptop, via the Ringswitch. The printer, monitor, hard disk drives and floppy disk drives were all exercised.

The reason for choosing this configuration was that it was defined by the client as being typical of normal use and likely to be a worst case with regard to EMC.

NB Section 2 of this report contains a full list of support equipment used and Appendix 3 contains a schematic diagram of the test configuration.

6. Summary Of Test Results

6.1. Summary Of Tests

Test Name	Specification Reference (Clause Number)	Port Type	Compliancy Status
AC Powerline Conducted Emissions	Section 15.107 of C.F.R. 47: 1998	AC Mains	Complied
Electric Field Strength Emissions	Section 15.109 of C.F.R. 47: 1998	Enclosure	Complied

6.2. Location Of Tests

All the measurements described in this report were performed at the premises of Radio Frequency Investigation Ltd., Ewhurst Park, Ramsdell, Basingstoke, Hampshire, RG26 5RQ.

7. Measurements, Examinations And Derived Results

7.1. General Comments

7.1.1. This section contains test results only. Details of the test methods and procedures can be found in Appendix 2 of this report.

7.1.2. The measurement uncertainties stated were calculated in accordance with the requirements of UKAS Document NIS 81 with a confidence level of 95%. Please refer to Section 8 for details of measurement uncertainties.

7.2. Test Results For AC Mains Conducted Emissions

7.2.1. Quasi-Peak Detector Measurements On Live And Neutral Lines

7.2.1.1. Plots of the initial scans can be found in Section 7.3.

7.2.1.2. The following table lists frequencies at which emissions were measured using a Quasi-Peak detector:

Frequency (MHz)	Line	Q-P Level (dBµV)	Q-P Limit (dBµV)	Margin (dB)	Result
0.665	Live	34.610	48.000	13.390	Complied
1.250	Neutral	31.970	48.000	16.030	Complied
3.512	Neutral	38.700	48.000	9.300	Complied
4.367	Neutral	38.900	48.000	9.100	Complied
6.260	Neutral	39.740	48.000	8.260	Complied
8.824	Neutral	44.210	48.000	3.790	Complied

7.3. Scan of Conducted Emissions

7.3.1. The following graph was produced as a result of a preliminary scan using max hold mode, incorporating a Peak detector with reference to both the Live and Neutral Lines.

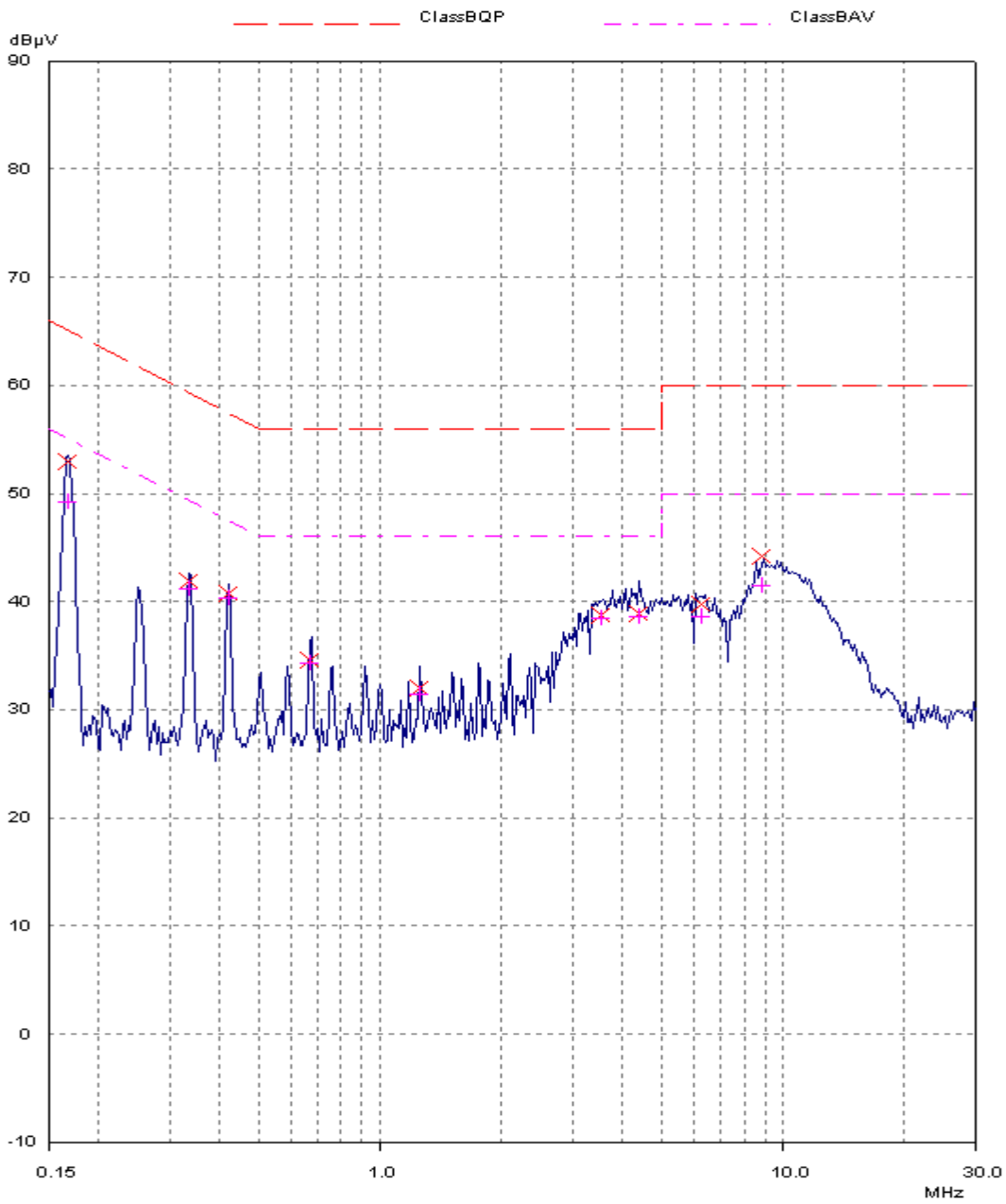

7.4. Test Results For Radiated Emissions

7.4.1. Electric Field Strength Measurements (Frequency Range: 30 to 1000 MHz)

7.4.1.1. Plots of the initial scans can be found in Section 7.5.

7.4.1.2. The following table lists frequencies at which emissions were measured using a Quasi-Peak detector at a test distance of 10m:

Frequency (MHz)	Ant. Pol.	Q-P Level (dBµV/m)	Q-P Limit (dBµV/m)	Margin (dB)	Result
45.551	Vert.	25.100	29.500	4.400	Complied
55.511	Vert.	21.200	29.500	8.300	Complied
62.745	Vert.	20.100	29.500	9.400	Complied
69.714	Vert.	20.300	29.500	9.200	Complied
80.583	Vert.	15.000	29.500	14.500	Complied
91.178	Vert.	37.000	43.500	6.500	Complied (Note 1)
103.851	Vert.	24.400	33.000	8.600	Complied
115.966	Vert.	16.000	33.000	17.000	Complied
135.214	Vert.	28.500	33.000	4.500	Complied
163.531	Vert.	25.500	33.000	7.500	Complied
193.943	Vert.	16.400	33.000	16.600	Complied
224.000	Vert.	26.400	35.500	9.100	Complied
249.989	Vert.	17.200	35.500	18.300	Complied
298.790	Vert.	26.700	35.500	8.800	Complied

Note 1. Due to the presence of close, high ambient signals, this emission was measured at a test distance of 3 metres. The specification limit line was extrapolated accordingly.

7.5. Scan of Radiated Emissions

7.5.1. The following graph was produced as a result of initial preliminary exploratory scans. These scans were performed at a 3 metre test distance to all four sides of the EUT in both antenna polarisation's. The scans were performed in a shielded enclosure using a max hold mode incorporating a Peak detector.

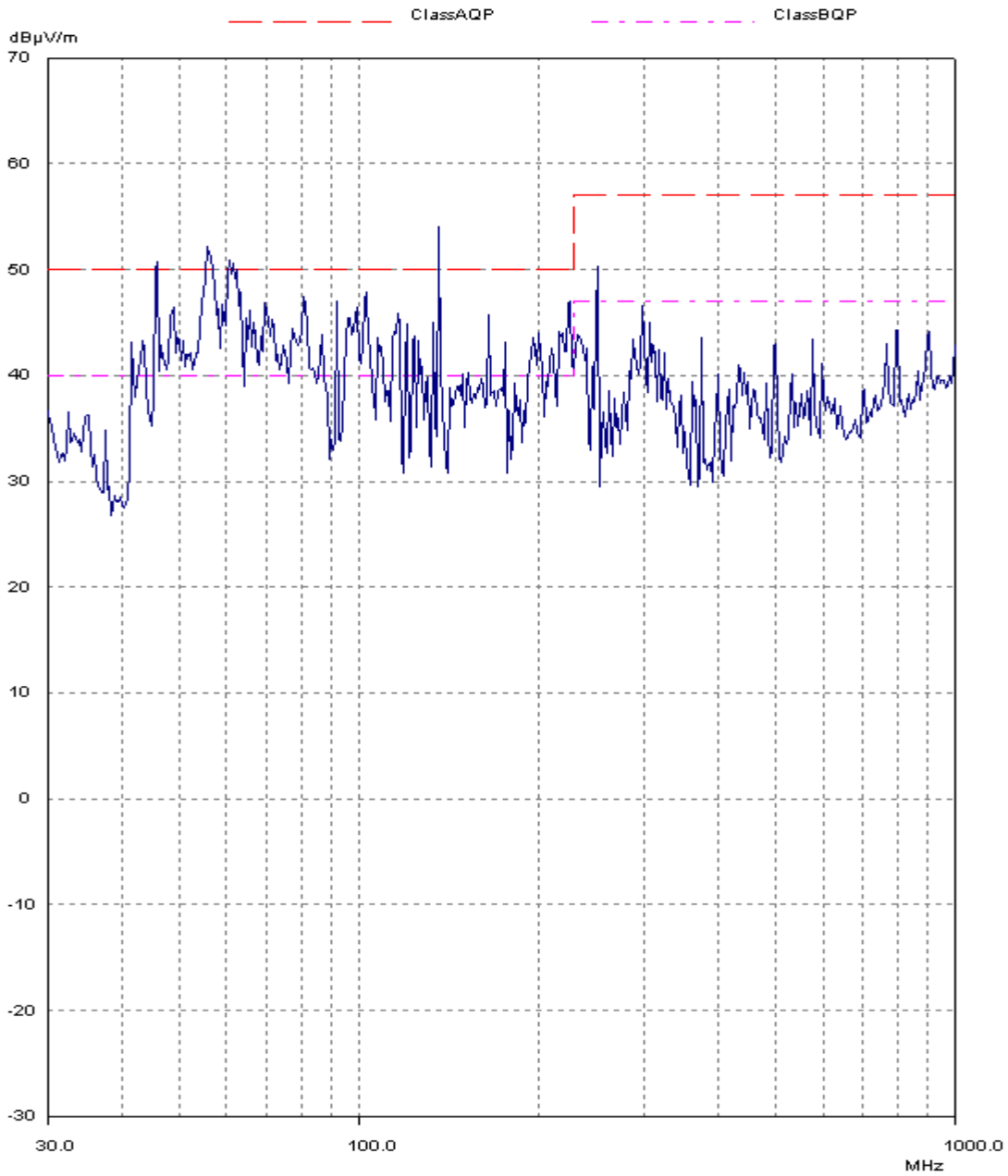

8. Measurement Uncertainty

8.1. Company Policy, as based on the UKAS Accreditation Standard, M10, paragraph 12.11 (o), states that Test Reports shall include estimated uncertainty of the calibration or test result (this information need only appear in test reports and test certificates where it is relevant to the validity or application of the test result, where a client's instructions so require or where uncertainty affects compliance to a specification or limit).

8.2. The reported expanded uncertainties below are based on a standard uncertainty multiplied by an appropriate coverage factor, such that a confidence level of approximately 95% is maintained. The uncertainty evaluation has been carried out in accordance with UKAS requirements:

Measurement Type	Range	Confidence Level (%)	Calculated Uncertainty
Conducted Emissions	0.15 MHz to 30 MHz	95%	+/- 2.2 dB
Radiated Emissions	30 MHz to 1000 MHz @ 3 m	95%	+/- 4.9 dB
Radiated Emissions	30 MHz to 1000 MHz @ 10 m	95%	+/- 4.1 dB

8.3. Measurement uncertainties have been applied in accordance with UKAS document NIS 81 (edition 1, May 1994), and in the absence of any specification criteria, guidance, or code of practice, compliance has been judged on the basis of shared risk.

8.4. In the case of emissions tests, the measured value of the disturbance from the product sample shall be compared directly with the limits. If the measured value is equal to or less than the limit the product is deemed to pass the test.

8.5. In the case of immunity tests, the equipment is deemed to pass the test if it fulfils the stated performance criteria at the required or a higher severity level. The measurement uncertainty has been taken into account in the calibration procedures stated in the relevant basic standard.

8.6. The methods used to calculate the above uncertainties are in line with those used for calibration laboratories contained in UKAS document M 3003 Edition 1“The Expression of Uncertainty and Confidence in Measurement” December 1997, which align with international recommendations “Guide to the Expression of Uncertainty in Measurement” ISO/IEC/OIML/BIPM (Prepared by ISO/TAG 4: January 1993).

Appendix 1. Test Equipment Used

Instrument	Manufacturer	Model Number	RFI No.
Chase Bilog Antenna	Chase EMC Ltd	CBL6112B	A1037
ESH3-Z5	Rohde & Schwarz	ESH3-Z5	A1069
OATS Positioning Controller	Rohde & Schwarz	HCC	A276
ESH3-Z2 Pulse Limiter	Rohde & Schwarz	ESH-Z2	A286
3 dB attenuator (9)	Suhner	6803.17.B	A392
Bilog Antenna	Chase	CBL6111A	A490
LISN	Rohde & Schwarz	ESH3-Z5	A649
Cable	RFI	None	C055
Cable	Rosenberger	UFA210A-1-1181-70x70	C160
Cable	Andrews	None	C341
Cable	Andrews	None	C342
Coaxial Cable	Rosenberger	UFA210A-1-1181-70x70	C346
BNC Cable	Rosenberger	RG142	C364
Cable	Rosenberger	RG142XX-001-RFIB	C454
Cable	Rosenberger	UFA210A-1-1182-704704	C459
Spectrum Monitor	Rohde & Schwarz	EZM	M003
ESVP Receiver	Rohde & Schwarz	ESVP	M023
Temperature/Humidity Meter	RS Components	212-146	M114
Turntable Controller	R.H.Electrical Services	RH351	M173
Thermo/hygro meter	RS Components Ltd	RS212-124	M210
Analyser Display Unit	Rohde & Schwarz	ESAI-D	M505
RF unit	Rohde & Schwarz	ESBI-RF	M506
Site 1	RFI	1	S201
Site 12	RFI	12	S212

NB In accordance with UKAS requirements, all the measurement equipment is on a calibration schedule.

Appendix 2. Measurement Methods

A2.1. AC Mains Conducted Emissions

A2.1.1. AC mains conducted emissions measurements were performed in accordance with the standard, against appropriate limits for each detector function.

A2.1.2. The test was performed in a shielded enclosure with the equipment arranged as detailed in the standard on a wooden bench using the floor of the screened enclosure as the ground reference plane.

A2.1.3. Initial measurements in the form of swept scans covering the entire measurement band were performed in order to identify frequencies on which the EUT was generating interference. In order to minimise the time taken for these swept measurements, a Peak detector was used in conjunction with the appropriate detector IF measuring bandwidths (see table below). Repetitive scans were performed to allow for emissions with low repetition rates, and the duty cycle of the EUT. The test configuration was the same for the initial scans as for the final measurements.

A2.1.4. During the swept measurements (and also during subsequent final measurements on single frequencies) any signals found to be between the limit and a level 6 dB below it were further maximised by changing the configuration of the EUT, e.g. re-routing cables to peripherals and moving peripherals with respect to the EUT.

A2.1.5. Following the initial scans, a graph was produced giving an overview of the emissions from the EUT plotted against the appropriate specification limit. A tolerance line was set 6 dB below the specification limit and levels above the tolerance line were re-tested (at individual frequencies) using the appropriate detector function.

A2.1.6. The test equipment settings for conducted emissions measurements were as follows:

Receiver Function	Initial Scan	Final Measurements
Detector Type:	Peak	Quasi-Peak (CISPR)/Average
Mode:	Max Hold	Not applicable
Bandwidth:	10 kHz*	9 kHz*
Amplitude Range:	60 dB	20 dB
Measurement Time:	Not applicable	> 1 s
Observation Time:	Not applicable	> 15 s
Step Size:	Continuous sweep	Not applicable
Sweep Time:	Coupled	Not applicable

* Where measurements were made below 150 kHz a 200 Hz bandwidth was used.

A2.2. Radiated Emissions

A2.2.1. Radiated emissions measurements were performed in accordance with the standard, against appropriate limits for a Quasi-Peak detector.

A2.2.2. Initial measurements covering the entire measurement band in the form of swept scans in a shielded enclosure were performed in order to identify frequencies on which the EUT was generating interference. This determined the frequencies on which the EUT should be re-measured in full on the open area test site. In order to minimise the time taken for the swept measurements, a Peak detector was used in conjunction with the appropriate detector IF measuring bandwidth (see table below). Repetitive scans were performed to allow for emissions with low repetition rates, and for the duty cycle of the EUT. The test configuration was the same for the initial scans as for the final measurements.

A2.2.3. The initial scans were performed using an antenna height of 1.5 m and a measurement distance of 3 m. Following the initial scans, graphs were produced giving an overview of the emissions from the EUT plotted against the appropriate specification limit. A tolerance line was set 6 dB below the specification limit and levels above the tolerance line were re-tested on the open area test site, at the appropriate distance, using a measuring receiver with a Quasi-Peak detector.

A2.2.4. For the main (final) measurements the EUT was arranged on a non-conducting table on an open area test site, as detailed in the specification.

A2.2.5. All measurements on the open area test site were performed using broadband antennas.

A2.2.6. On the open area test site, at each frequency where a signal was found, the levels were maximised by initially rotating the turntable through 360° and then varying the antenna height between 1 m and 4 m. At this point, any signals found to be between the limit and a level 6 dB below it were further maximised by changing the configuration of the EUT, e.g. re-routing cables to peripherals and moving peripherals with respect to the EUT.

A2.2.7. The test equipment settings for radiated emissions measurements were as follows:

Receiver Function	Initial Scan	Final Measurements
Detector Type:	Peak	Quasi-Peak (CISPR)
Mode:	Max Hold	Not applicable
Bandwidth:	100 kHz	120 kHz
Amplitude Range:	60 dB	20 dB
Measurement Time:	Not applicable	> 1 s
Observation Time:	Not applicable	> 15 s
Step Size:	Continuous sweep	Not applicable
Sweep Time:	Coupled	Not applicable

Appendix 3. Test Configuration Drawings

This appendix contains the following drawings:

Drawing Reference Number	Title
DRG\41115ETF01\EMIFCON	Test configuration for measurement of conducted emissions
DRG\41115ETF01\EMIRAD	Test configuration for measurement of radiated emissions
DRG\41115ETF01\001	Schematic Diagram of the EUT, support equipment and interconnecting cables used for the test

DRG\41115ETF01\EMIFCON

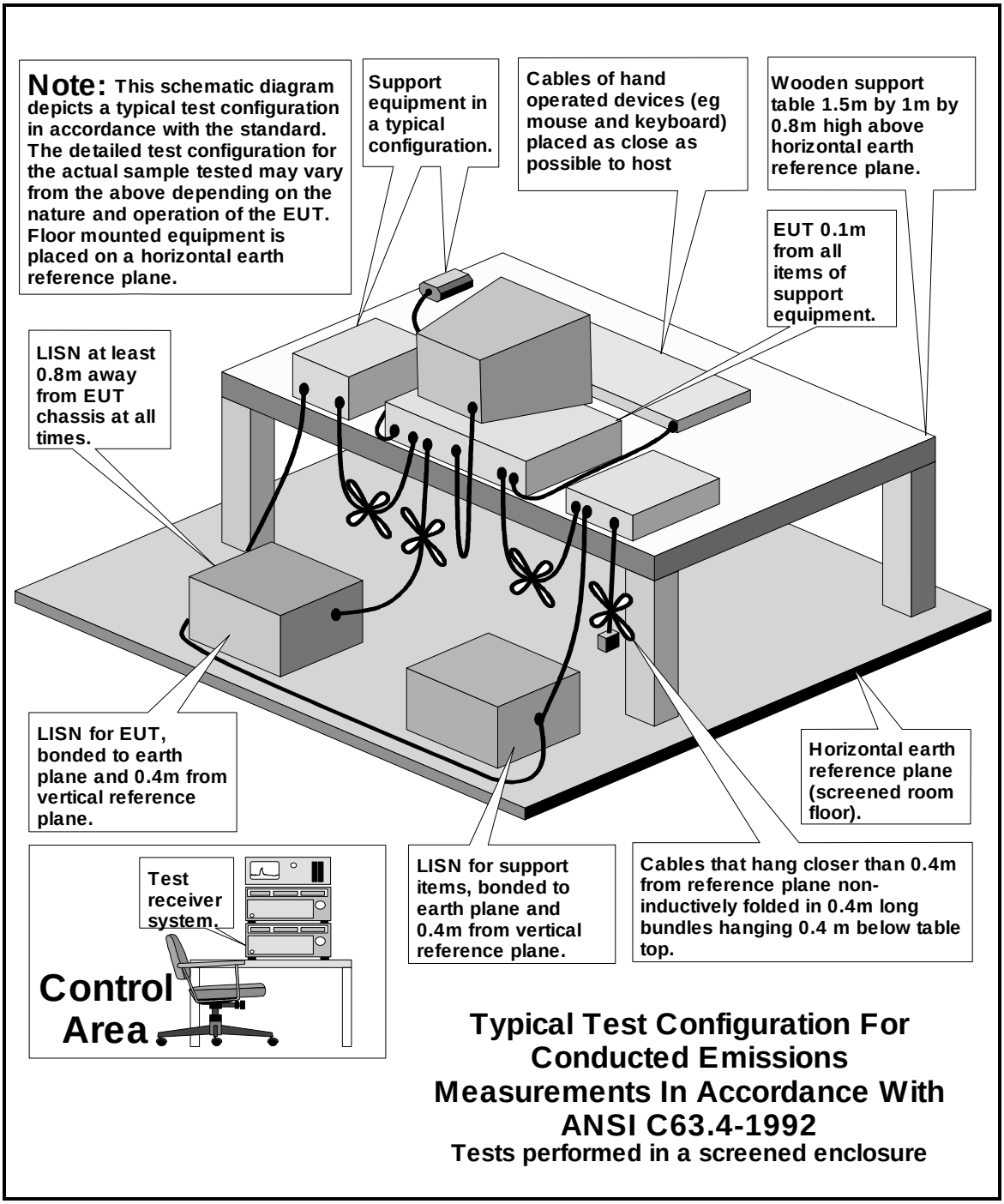

Typical Test Configuration For Conducted Emissions Measurements In Accordance With ANSI C63.4-1992

Tests performed in a screened enclosure

DRG\41115ETF01\EMIRAD

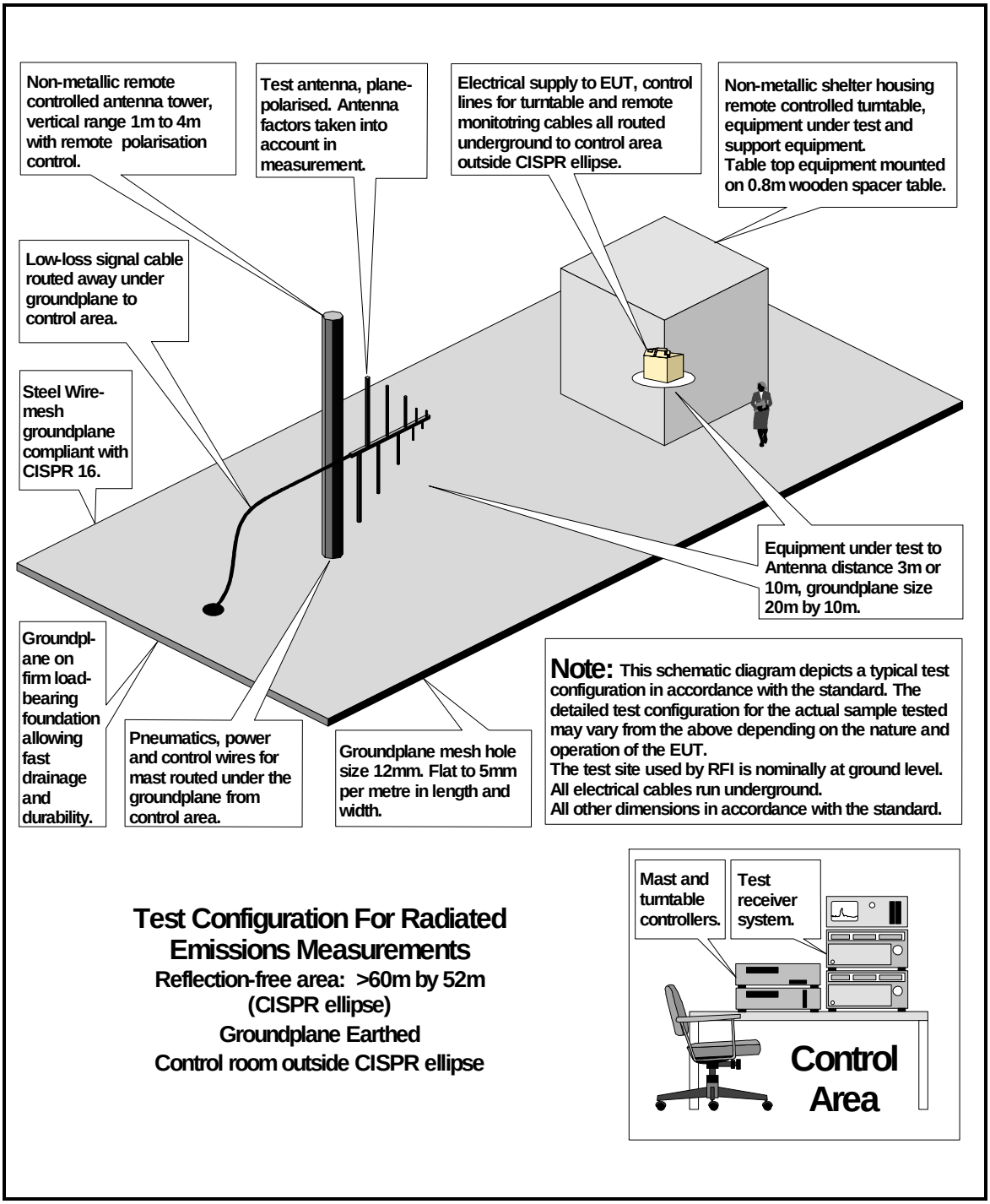

Test Configuration For Radiated Emissions Measurements

Reflection-free area: >60m by 52m (CISPR ellipse)

Groundplane Earthed

Control room outside CISPR ellipse

DRG\41115ETF01\001

Configuration of EUT and Local Support Equipment

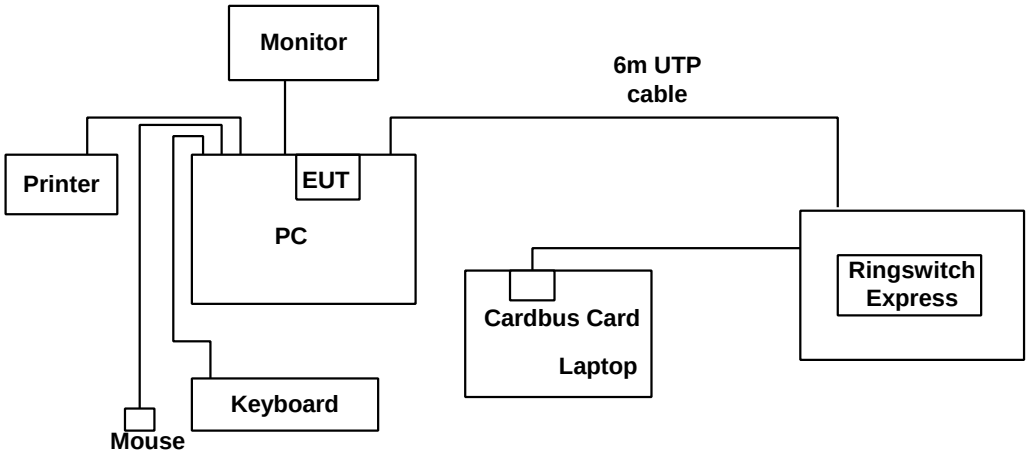

Configuration of Remote Support Equipment

Appendix 4. Photographs of EUT

This appendix contains the following photographs

Photo Reference Number	Title
PHT\41115ETF01\001	Front view of EUT
PHT\41115ETF01\002	LHS view of EUT
PHT\41115ETF01\003	RHS view of EUT
PHT\41115ETF01\004	Rear view of EUT
PHT\41115ETF01\005	View of EUT
PHT\41115ETF01\006	View of radiated emissions

These pages are not included in the total number of pages for this report.

Test Of: **Madge Networks Ltd.**
Low Profile PC Card PCI-5
To: **FCC Part 15: 1998 Class B**

PHT\41115ETF01\001 Front view of EUT

Test Of: **Madge Networks Ltd.**
Low Profile PC Card PCI-5
To: **FCC Part 15: 1998 Class B**

Test Of: Madge Networks Ltd.
Low Profile PC Card PCI-5
To: FCC Part 15: 1998 Class B

PHT\41115ETF01\002 LHS view of EUT

Test Of: **Madge Networks Ltd.**
Low Profile PC Card PCI-5
To: **FCC Part 15: 1998 Class B**

PHT\41115ETF01\003 RHS view of EUT

Test Of: **Madge Networks Ltd.**
Low Profile PC Card PCI-5
To: **FCC Part 15: 1998 Class B**

PHT\41115ETF01\004 Rear view of EUT

Test Of: **Madge Networks Ltd.**
Low Profile PC Card PCI-5
To: **FCC Part 15: 1998 Class B**

PHT\41115ETF01\005 Rear view of EUT

Test Of: **Madge Networks Ltd.**
Low Profile PC Card PCI-5
To: **FCC Part 15: 1998 Class B**

PHT\41115ETF01\006 View of radiated emissions