WNC

DLUS-WI01-NA Data Sheet (Preliminary)

www.wnc.com.tw

About this Data Sheet

Purpose and Scope

The DLUS-WI01-NA modules are complete LTE Cat1 systems including base-band, RF and memory, targeting mass-market wearables, consumers and M2M / IoT devices. This document provides the technical information about the DLUS-WI01-NA LGA module family. Calliope 2 modules are based on Sequans's SQN3530 chipset.

Changes in this Document

This is the ninth preliminary (P9) revision of the document, superseding version P8 (May 2024).

Rev.	Date	Changes
1.0	8/22 2024	Initial release

Table 1. Revision and changes

Contents

About this Data Sheet .....

1. GENERAL DESCRIPTION 1

1.1. Frequency Bands 1

1.2. Block Diagram 2

1.3. General Features 2

1.4. Applications 2

1.5. Available Part Numbers 3

2. INTERFACES 4

2.1. Pin Assignment 4

2.2. UART 4

2.2.1. Introduction 4

2.2.2. UART Electrical Characteristics 5

2.2.3. UART Signals 6

2.2.4. UART 0 Interface 8

2.2.5. UART 1 Interface 8

2.2.6. UART 2 Interface 9

2.2.7. UART 3 Interface 9

2.3. USB 9

2.4. USIM Interfaces 11

2.5. I²C 13

2.6. PCM/I²S 13

2.7. SPI 14

2.8. GPIO 14

2.9. Other Signals 16

2.10. JTAG 20

2.11. Antenna 20

3. ELECTRICAL, RF AND THERMAL CHARACTERISTICS 21

3.1. Power 21

3.2. Digital I/O Characteristics 24

3.3. RF Performance 25
3.4. Typical Power Consumption 27
4. HARDWARE DESIGN RECOMMENDATIONS 28
4.1. RF Interface 28
4.1.1. Circuit Diagram Example 28
4.1.2. Antennas and RF Design Considerations 28
4.1.3. Antenna Matching Circuitry 30
4.1.4. Test Points and Measurement Access 31
4.2. PCB Layout Rules 31
4.2.1. Placement 31
4.2.2. PCB Layers 32
4.2.3. Track Design Advice 32
4.2.4. Thermal Considerations 34
4.2.5. Example of a 6-Layer PCB Design 34
4.3. Hardware Test Preparation 39
4.3.1. LTE RF Test Preparation 39
4.3.2. USB and Power Interfacing 41
4.4. Bring-Up and Testing 41
4.4.1. Introduction 41
4.4.2. Prerequisites 41
4.4.3. Power Supply 42
4.4.4. Confirm Module Power-Up Operation (UART 2) 43
4.4.5. GPIOs 44
4.4.6. SIM Communication 45
5. MANUFACTURING 46
5.1. Module Configuration 46
5.1.1. Read Device Data 46
5.1.2. Customise Hardware Configuration 46
5.1.3. Customise Software Configuration 48
5.1.4. Save Device Configuration 49

5.1.5. Update the Flash Software Image 49

5.2. Functional Verification with Assembled Module 50
5.2.1. Power Supply 50
5.2.2. RF Test Environment 50
5.2.3. Calibration of the RF Setup 52
5.2.4. Testing in Non-Signalling Mode 52
5.2.5. Testing in Signalling Mode 52
5.3. Storage and Mounting 53
5.4. Reliability Specification 53
6. MECHANICAL CHARACTERISTICS 54
6.1. Package Description 54
6.2. Environmental Conditions 56
6.3. Packing 57
7. REGULATORY APPROVAL 58
7.1. DLUS-WI01-NA-EU Certification 58
7.2. DLUS-WI01-NA-NA Certification 58
7.2.1. FCC Regulatory Approval 58
7.2.2. ISED Regulatory Approval 60
7.3. DLUS-WI01-NA-JP1 Certification 61
A. TROUBLESHOOTING 62
1.1. JTAG Investigations 62
B. ACRONYMS 66

1. General Description

The Calliope 2 DLUS-WI01-NA modules are based on WNC's second-generation Calliope 2 silicon and delivers optimised 4G LTE Cat 1 connectivity for IoT, M2M and consumer devices such as wearables and hearables that require voice support and speed higher than LTE-M.

Calliope 2 provides significant improvements in performance and power consumption over Calliope 1, while offering a seamless migration, because it also leverages WNC's existing 4G LTE protocol stack, one of the most mature and proven in the entire LTE ecosystem. The Calliope 2 DLUS-WI01-NA modules include WNC's Calliope 2 platform and all other elements needed for a LTE modem system, including an LTE optimised transceiver, an RF front end, and key interfaces in a compact, cost-effective form factor that needs no external components.

It also includes an integrated EAL5+ secure enclave providing secure key storage, cryptographic applications and integrated SIM (iSIM) functionality.

Calliope 2 DLUS-WI01-NA modules are manufactured in three regional variants covering North America, Japan and Europe.

Calliope 2 based modules are compatible with WNC's *Monarch 2 GM02S* modules, easing the migration and the integration into already existing LTE-M or NB1 designs.

1.1. Frequency Bands

The DLUS-WI01-NA modules support the following bands, according to their designated region:

Variant Name	Bands	Region
DLUS-WI01-NA	B25 [B2]/B66 [B4]/B5/B12 [B17]/B13/B14	North America
DLUS-WI01-JP	B1/B26 [B18/B19]	Japan
DLUS-WI01-EU	B1/B3/B8/B20 and B28	Europe

Table 2. Band Support per Module Variant

1.2. Block Diagram

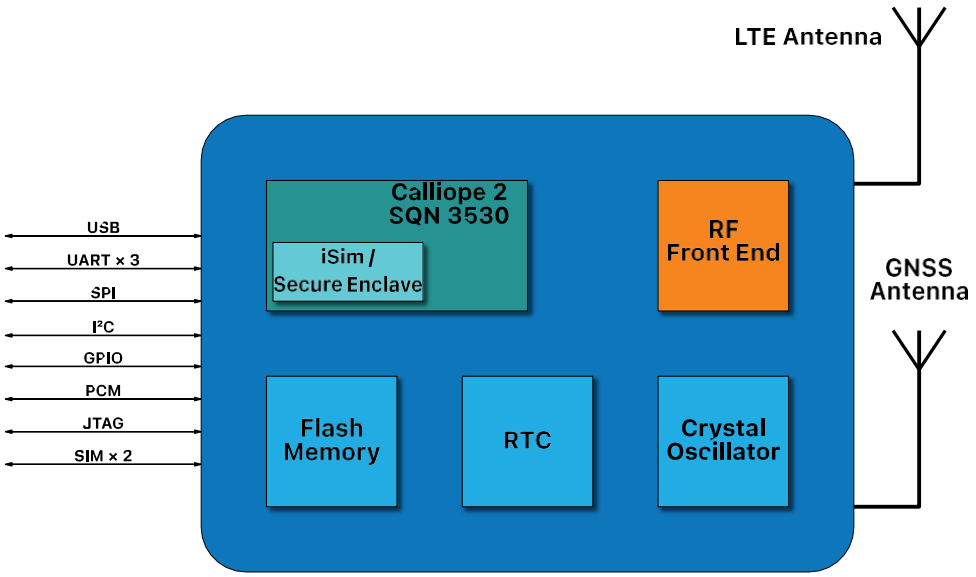

Figure 1. DLUS-WI01-NABlock Diagram

1.3. General Features

Physical Characteristics	LGA module, 142 pads. Size: 21 × 19.5 × 1.8 mm typ.
Temperature and Humidity Ranges	Board temperature range: -40 to +85 °C. Humidity: 10 to 85% (non-condensing). Storage: MSL3.
Power Supply	3.2 to 5.5 V (see section Power (on page 21)).
Maximum Tx Power	+23 dBm in each band.
Interfaces	• Dual (U)SIM Card Interface: support for external, removable or fixed UICC. Support for integrated UICC (iUICC) with a dedicated p/n. • USB 2.0 • 4x High-Speed UART Interfaces with flow control, up to 3.6 Mbauds. • GPIOs, I²C, SPI, PWM, Pulse Counter, I²S/PCM, ADC.
SMS	SMS over IMS or NAS.
Firmware Upgrade	USB or UART interfaces, FOTA, support of differential firmware upgrade.
RoHS	All hardware components are fully compliant with EU RoHS directive, bromine-free.
LTE Features	• 3GPP LTE Release 14 Cat 1 bis compliant. • Hardware ready for 3GPP LTE Release 15. • 10Mbps / 5Mbps DL/UL throughput.

1.4. Applications

The Calliope 2 DLUS-WI01-NA modules are ideal to bring LTE Connectivity to M2M and IoT devices, including:

- Utility meters
- Industrial sensors
- Security and alarm systems
- Payment systems
- Asset trackers
- Smart home devices
- Smart meters
- Wearable consumer applications.

1.5. Available Part Numbers

Available Part Number	Software Build (ATI1)	UE Version (ATI1)	PTCRB Model Name / Model	Availability
DLUS-WI01-NA	R9.0.4.1	TBD	Will be provided in a future edition of the document	Samples
DLUS-WI01-EU	Will be provided in a future edition of the document	TBD	Will be provided in a future edition of the document	TBD
DLUS-WI01-JP	Will be provided in a future edition of the document	TBD	Will be provided in a future edition of the document	TBD

Table 3. Available Part Numbers

2. Interfaces

The DLUS-WI01-NA modules includes communication I/O ports, GPIO and antenna RF I/O. This chapter provides description of all the DLUS-WI01-NA's interfaces.

Power supply pins pin-out and characteristics are detailed in section Electrical, RF and Thermal Characteristics (on page 21).

2.1. Pin Assignment

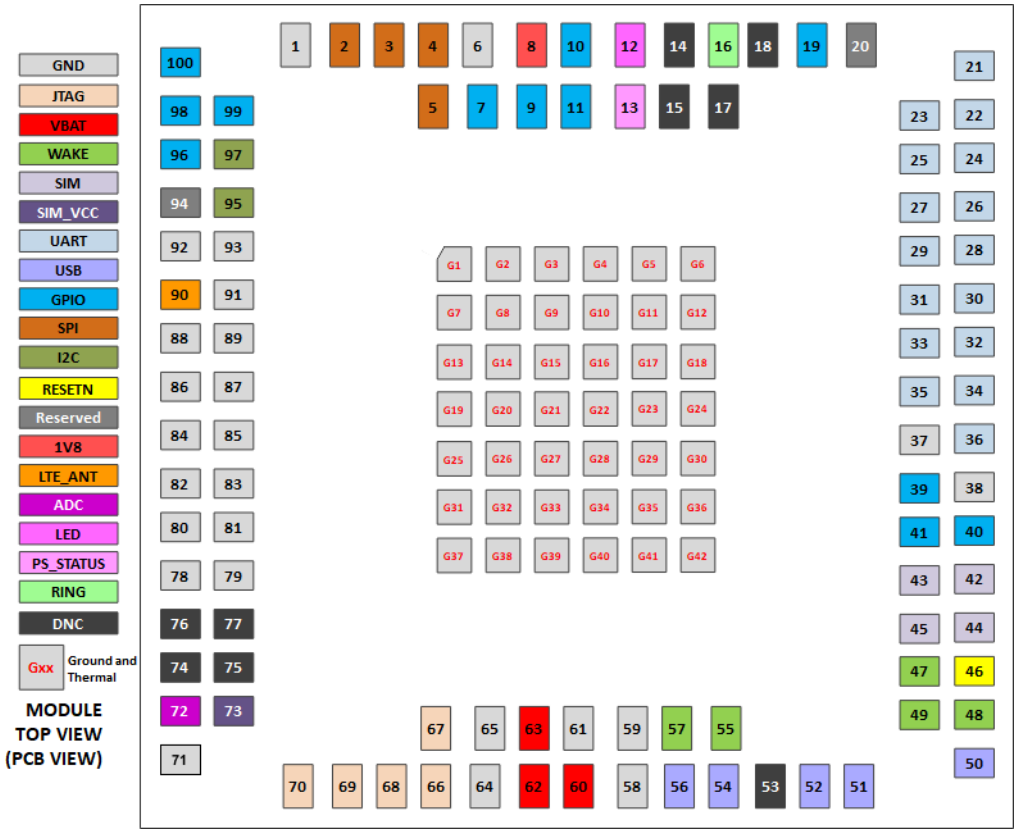

Figure 2. DLUS-WI01-NA Modules Pads Assignment

Note: Pin 20 (RESERVED) must be pulled down.

2.2. UART

2.2.1. Introduction

Serial communications between the DLUS-WI01-NA and the host platform can use any of the four UART interfaces named UART 0, 1, 2 and 3, all of which implement flow control.

UART interfaces support three modes:

- The Host-Modem interface, also named '*AT-Commands mode*', configures and exchanges data with the modem using standard or proprietary AT commands. This mode requires a high-speed UART port with flow control.
- The Modem Console interface copies the logs from the LTE modem
- The Debug interface (also referred to as DCP) is needed by the *DMTool* during design verification or debugging. This interface can be used to upgrade with SFU.

UART Port	Default Usage of Port	Available Usage of Port
UART 0	AT Commands	Host-Modem interface
UART 1[1]	AT Commands	Manufacturing, debug and upgrade
UART 2	Modem Console	Modem Console
UART 3	Reserved, do not use	Reserved, do not use

Table 4. UART Interfaces Usage Synthesis

The default configuration is shown in Table 4 (on page 5), and is configurable by software.

Important: Designs based on the DLUS-WI01-NA should provide access to UART 1 with hardware flow control to facilitate debug and upgrade during the development of the product. Simple UART connectors or, more conveniently, dedicated UART-to-USB converter ICs paired with a USB connector, as implemented in the NEKTAR reference design, suffice.

Various UART-to-USB converters were tested on Calliope 2 modules, including the Exar XR21V1410™, FTDI FT234XD™ or FTDI FT4232H™. Implementation examples are available in Sequans's or NEKTAR's reference designs schematics.

The following sections detail these interfaces.

2.2.2. UART Electrical Characteristics

CAUTION: Voltage on any pads must never exceed V_{IH} max.

Symbol	Minimum	Maximum	Unit
V_{IH} Input High level	1.26	3.3	V
V_{IL} Input Low level	0	0.54	V
V_{OH} Output High voltage	1.44	1.8	V

Table 5. UART Pads DC Characteristics

1. UART 1 is configured by default in AT Commands mode, but must be set to DCP mode during product manufacturing. See more details in the *Module Manufacturing Guidelines* document.

Symbol	Minimum	Maximum	Unit
V_{OL} Output Low voltage	0	0.36	V

Table 5. UART Pads DC Characteristics (continued)

2.2.3. UART Signals

Pad #	Pad Name	Primary Function	Alternate[2] Function	Direction	Pad type	Voltage	Drive[3] Strength	Reset state
UART0								
36	GPIO12/ TXD0	TXD0	GPIO12	In/Out	BIDIR	1.8 V	T to H	High-Z, T
		In for primary function, UART0.						
34	GPIO13/ RXD0	RXD0	GPIO13	In/Out	BIDIR	1.8 V	T to H	Out-1, T
		Out for primary function, UART0.						
35	GPIO14/ CTS0	CTS0	GPIO14	In/Out	BIDIR	1.8 V	T to H	Out-1, T
		Out for primary function, UART0.						
33	RTS0	RTS0	N/A	In	IN	VBAT	N/A	High-Z
		Wake signal enabled by default.						
UART1								
32	TXD1	TXD1	N/A	In	BIDIR	1.8 V	T to H	High-Z, T
		UART1						
30	RXD1	RXD1	N/A	Out	BIDIR	1.8 V	T to H	Out-1, T
		UART1						
31	CTS1	CTS1	N/A	Out	BIDIR	1.8 V	T to H	Out-1, T
		UART1						
29	RTS1	RTS1	N/A	In	IN	VBAT	N/A	High-Z
		Wake signal enabled by default.						
UART2								
28	GPIO15/ TXD2	TXD2	GPIO15	In/Out	BIDIR	1.8 V	T to H	High-Z, T
		In for primary function, UART2.						
26	GPIO16/ RXD2	RXD2	GPIO16	In/Out	BIDIR	1.8 V	T to H	Out-1, T
		Out for primary function, UART2.						
27	GPIO17/ CTS2/ DCD0	GPIO17	CTS2/ DCD0	In/Out	BIDIR	1.8 V	T to H	Out-1, T
		UART2						

Table 6. UART Signals

2. Alternate functions will be available in future versions of the module via SW upgrade.
3. Drive Strength is programmable. Numerical values are given in table Table 27 (on page 25).

Pad #	Pad Name	Primary Function	Alternate[2] Function	Direction	Pad type	Voltage	Drive[3] Strength	Reset state
25	GPIO18/ RTS2/ DSR0	GPIO18	RTS2/ DSR0	In/Out	BIDIR	1.8 V	T to H	High-Z, T
		UART2						
UART3								
24	GPIO19/ TXD3	GPIO19	TXD3	In/Out	BIDIR	1.8 V	T to H	High-Z, T
		GPIO19						
22	GPIO20/ RXD3	GPIO20	RXD3	In/Out	BIDIR	1.8 V	T to H	Out-1, T
		GPIO20						
21	GPIO21/ CTS3	GPIO21	CTS3	In/Out	BIDIR	1.8 V	T to H	Out-1, T
		GPIO21						
23	GPIO22/ RTS3	GPIO22	RTS3	In/Out	BIDIR	1.8 V	T to H	Out-1, T
		GPIO22						

Table 6. UART Signals (continued)

High-Speed UARTs Flow Control Signals:

- CTS0, CTS1, CTS2, CTS3: Clear-To-Send signals of resp. UART0, UART1, UART2, UART3 (active low). To be connected to the CTS of the remote UART device. If connected to an external component (such as an RS-232 driver), make sure that this component drives the signal low.

  Leave CTS unconnected if hardware flow control is not used.

- RTS0, RTS1, RTS2, RTS3: Request-To-Send signals of resp. UART0, UART1, UART2, UART3 (active low). To be connected to the RTS of the remote UART device. Use a 1 kΩ pull-down when flow control is not used.

In order for the module to properly enter low power mode, if hardware flow control is not used, it must also be disabled using `AT+SQNHWCFG`.

Figure 3 (on page 7) represents the typical implementation for hardware flow control.

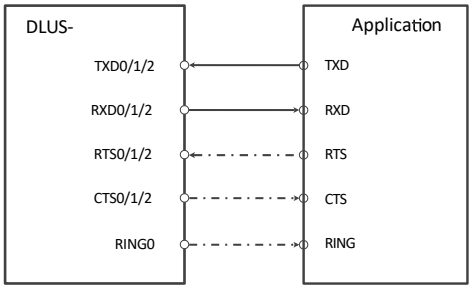

Figure 3. UART Convention and Flow Control

Note: After configuring specific software registers and setting the CTS signal to 0, high-speed UARTs can be used as low-speed UARTs. Please contact Sequans's customer support for details.

2. Alternate functions will be available in future versions of the module via SW upgrade.
3. Drive Strength is programmable. Numerical values are given in table Table 27 (on page 25).

Attention: When pull-ups are recommended or required on UART lines, care must be taken that the DC power source pulling-up the signal remains on when the module goes into low power mode. Never use the DLUS-WI01-NA 1V8 signal (which is turned off in low power mode).

2.2.4. UART 0 Interface

Important:

- UART 0 signals should be connected to test points.
- A pull-up is recommended on UART 0's RTS and CTS signals (see warning above).
- UART 0's tracks should be routed on a buried layer to reduce the EM leakage.

Default Configuration

UART 0 is in 'AT-Commands mode' by default with hardware flow control on. Serial link configuration:

- Baud rate: 115200 (maximum speed: 3686400 bit/s)
- Data: 8 bits
- Parity: None
- Stop : 1 bit
- Flow control: Hardware (RTS/CTS)

Behaviour in Low Power Mode

- The module power mode selection is internally managed by the module software.
- RTS0 signal is an input to the module. The host uses it to wake the module up. A pull-up, either internal or external, is recommended on this signal to avoid the module waking up if the host goes into low power mode and leaves the pad floating.
- CTS0 is an output of the module. It signals when the modem is ready to receive characters. Since the modem does not drive this signal during deep sleep mode, it is preferable to pull the signal up either internally or externally.

2.2.5. UART 1 Interface

Important:

- UART 1's signals should be connected to test points.
- A pull-up is recommended on UART 1's RTS signal (see warning above).

Default Configuration

UART 1 is in 'AT-command' mode by default.

Default serial parameters:

- Baud rate: 921600 (maximum speed: 3686400 bit/s)
- Data: 8 bits
- Parity: None

- Stop: 1 bit
- Flow control: Hardware (RTS/CTS)

Behaviour in Low Power Mode

- The module power mode selection is internally managed by the module's software.
- The RTS1 signal can be used by the host as an alternative to RTS0 to wake the module up.

2.2.6. UART 2 Interface

Important: UART 2 signals should be connected to test points.

Default Configuration

UART 2 is in console mode by default. The boot log is sent on this interface.

Default serial configuration:

- Baud rate: 115200 (max speed: 115200 bit/s)
- Data: 8 bits
- Parity: None
- Stop : 1 bit
- Flow control: None

Behaviour in Low Power Mode

UART 2 RTS cannot be used to wake the module from low power modes.

2.2.7. UART 3 Interface

Important: UART 3 is reserved for future use.

2.3. USB

The DLUS-WI01-NA modules have one USB hardware interface. Once enumerated, the USB interface exposes the following profiles:

- USB CDC_ACM: Data and control from external MCU using AT commands (UART emulation)
- USB CDC_ECM: Data (IP) from external MCU (IP traffic sent on the LTE network)
- USB SFU: Firmware upgrade

The USB profile can be configured to present multiple ACM/ECM interfaces. Please refer to the `AT+SQNUSBCFG`, `AT+BIND` and `AT+SQNHWCFG` commands in the relevant *AT Commands Reference Manual* for more information.

Note:

- All `USB CDC_ACM` ports are initially configured in AT mode
- Changes made by the `AT+BIND` command are lost with any subsequent RESET. Persistent changes must use the `AT+SQNHWCFG` command.

Pad #	Pad Name	Primary Function	Direction	Pad type	Mandatory
50	USB_EXT_VBUS_VLD (WAKE4, see below)	Wake from sleep	In	VBAT	NO
51	USB_DP	USB In/Out	In/Out	BIDIR	YES
52	USB_DM	USB In/Out	In/Out	BIDIR	YES
54	USB_CC1	USB In/Out	In/Out	BIDIR	NO
56	USB_CC2	USB In/Out	In/Out	BIDIR	NO
7	GPIO11/SPI_CSN2/USBDRDY	USBREADY	Output	BIDIR	NO

Table 7. USB Pad Details

Refer to Table 25 (on page 25) and Table 26 (on page 25) for electrical max. values.

Important: The USB_CC1 and USB_CC2 pins need not be connected for the interface to work properly.

Important: Pin 7 (USBDRDY) is an optional pin that can be used to wake the host up in case the USB controller doesn't support remote suspend/resume. When the module has pending data to deliver in its output buffer, it uses the `USBDRDY` signal (see Table 15 (on page 16)) to wake up the host.

Important: `USB_EXT_VBUS_VLD` is internally connected to `WAKE4`, which is disabled by default. Enabling `WAKE4` is done using the `AT+SQNHWCFG` command (see the *AT Commands Reference Manual LR 9.0*).

USB Example Schematics

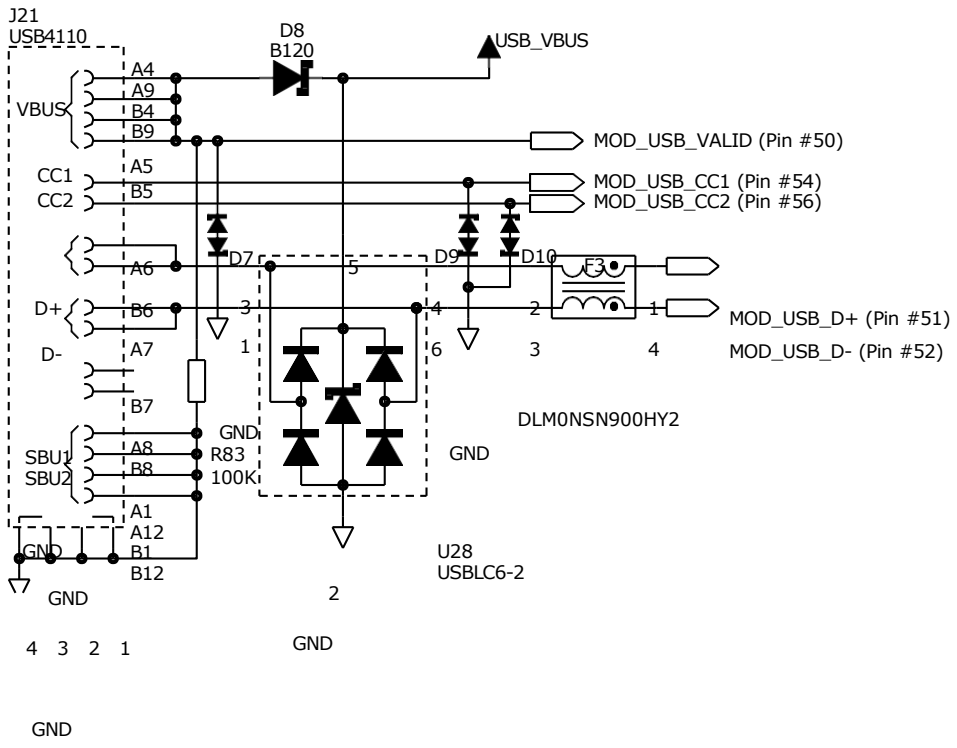

Figure 4. USB Wiring

USB and UART Availability for Built-in Software Services

The UART/USB interfaces of the DLUS-WI01-NA are used by different built-in service providers. Table details the interfaces available to the different services bundled with the standard software releases issued by WNC. If interface and service are compatible, the corresponding cell is filled with a 'x', otherwise it is left blank.

SERVICE	UARTx	USB_ACMx	USB_ECM
PPP	x	x	
AT Commands	x	x	
MUX	x		
Console	x	x	
SFU Upgrade	x	x	
Debug (DM Tool)	x	x	

Table 8. Interface Availability vs Software Service

Note:

1. Only one CDC_ECM interface is available, but this interface supports VLAN (multiplexed IP channels)
2. ECM is exclusive to every other data access protocol. When ECM is enabled with the `AT+SQNHWCFG` command, PPP and the internal IP stack are unavailable.

2.4. USIM Interfaces

SIM0 Interface

This is the main external SIM interface. It can be used with removable or soldered SIM chips. The modem manages the SIM's power supply to keep the power budget as low as possible.

Important: Both SIM0 and SIM1 interfaces use 1.8 V signalling.

Important: The SIM0_DETECT signal is optional. When wired, it is active high. Its polarity is NOT configurable.

Pad #	Pad Name	Direction	Pad type [4]	Voltage	Drive [5] Strength	Reset State	Comment
42	SIM0_CLK	Out	BIDIR	1.8 V	T to H	Out-0, T	Main SIM
45	SIM0_DETECT [6]	In	IN	VBAT	N/A	High-Z	Main SIM
44	SIM0_IO	In/Out	BIDIR	1.8 V	T to H	High-Z, T	Main SIM

Table 9. SIM0 Signals

4. USIM pad types electrical characteristics are detailed in Table 25 (on page 25) and Table 26 (on page 25).
5. Drive Strength is programmable. Numerical values are given in table Table 27 (on page 25).
6. SIM0_DETECT can be configured as a WAKE pin via software command.

Pad #	Pad Name	Direction	Pad type [4]	Voltage	Drive [5] Strength	Reset State	Comment
43	SIM0_RSTN	Out	BIDIR	1.8 V	T to H	Out-0, T	Main SIM
73	SIM0_VCC [7]	Out	SUPPLY	1.8 V	T to H	Out-0, T	Main SIM

Table 9. SIM0 Signals (continued)

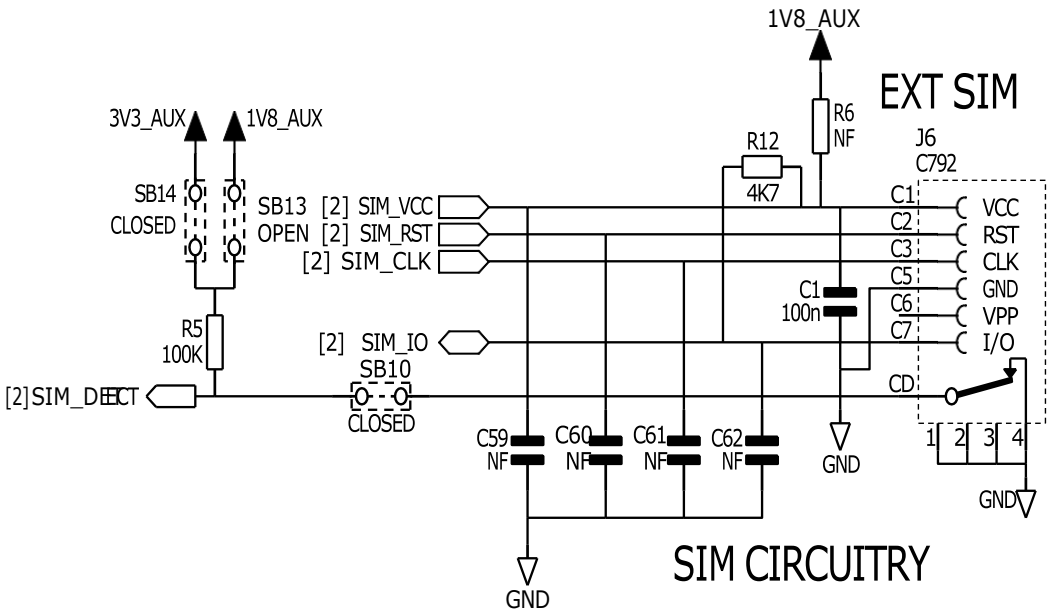

Figure 5. Example of External SIM Interfacing

SIM1 Interface

This DLUS-WI01-NA 's interface to a second SIM is typically dedicated to soldered SIM chips (neither SIM detect nor SIM VCC are provided). The soldered SIM can be powered from the VBAT signal using a DC/DC regulator, if need be. If the board uses a single SIM, it should be connected to the main SIM interface (see Section SIM0 Interface (on page 11) above).

Pad #	Pad Name	Primary Function	Alternate [8] Function	Direction	Pad Type [9]	Voltage	Drive [10] Strength	Reset state
40	GPIO26/SIM1_CLK	GPIO26	SIM1_CLK	Out	BIDIR	1.8 V	T to H	Out-0, T
41	GPIO27/ SIM1_RESETN	GPIO27	SIM1_RESETN	Out	BIDIR	1.8 V	T to H	Out-0, T

Table 10. SIM1 Signals

4. USIM pad types electrical characteristics are detailed in Table 25 (on page 25) and Table 26 (on page 25).
5. Drive Strength is programmable. Numerical values are given in table Table 27 (on page 25).
7. See range of values in Table 20 (on page 21).
8. Alternate functions will be available in future versions via SW upgrade.
9. Pad types electrical characteristics are detailed in Table 25 (on page 25).
10. Drive Strength is programmable. Numerical values are given in table Table 27 (on page 25).

Pad #	Pad Name	Primary Function	Alternate[8] Function	Direction	Pad Type [9]	Voltage	Drive[10] Strength	Reset state
39	GPIO25/SIM1_IO	GPIO25	SIM1_IO	In/Out	BIDIR	1.8 V	T to H	High-Z, T

Table 10. SIM1 Signals (continued)

Other Hardware Considerations

- Use a 100 nF decoupling capacitor on SIM_VCC
- Use a 4.7 kΩ pull-up resistor between SIM_VCC and SIM_IO
- The SIM connector should be located as close as possible to the DLUS-WI01-NA
- Please ensure ground continuity between the SIM card and the DLUS-WI01-NA
- If the application handles SIM card hot swapping, the SIM slot must contain a card detector in order for the software to process the event immediately. Default software configuration is to support SIM_DETECT
- If the SIM card tray does not support SIM_DETECT (not recommended), keep the SIM_DETECT signal high and configure the module for SIM card detection using polling mode

2.5. I²C

Pad #	Pad Name	Primary Function	Alternate[11] Function	Direction	Pad type [12]	Voltage	Drive[13] Strength	Reset State
95	GPIO23/I2C_SDA	GPIO23	I2C_SDA	In/Out	BIDIR	1.8 V	T to M	High-Z
97	GPIO24/I2C_SCL	GPIO24	I2C_SCL	In/Out	BIDIR	1.8 V	T to M	High-Z

Table 11. I²C Pad Details

Note: Both I2C_SDA and I2C_SCL must be pulled up with a 100 kΩ resistor tied to an external power supply.

Note: I²C is not yet software supported. It is reserved for future use.

2.6. PCM/I²S

Pad #	Pad Name	Primary Function	Alternate[14] Function	Direction	Pad type [15]	Voltage	Drive[16] Strength	Reset State
96	GPIO4/PCM_CLK	GPIO4	PCM_CLK	In/Out	BIDIR	1.8 V	T, L	High-Z
98	GPIO3/PCM_RXD	GPIO3	PCM_RXD	In/Out	BIDIR	1.8 V	T, L	High-Z

Table 12. PCM Pad Details

8. Alternate functions will be available in future versions via SW upgrade.
9. Pad types electrical characteristics are detailed in Table 25 (on page 25).
10. Drive Strength is programmable. Numerical values are given in table Table 27 (on page 25).
11. Alternate functions will be available in future versions via SW upgrade.
12. I²C pad types's electrical characteristics are detailed in Table 25 (on page 25).
13. Drive Strength is programmable. Numerical values are given in table Table 27 (on page 25).
14. Alternate functions will be available in future versions via SW upgrade.
15. PCM pad types's electrical characteristics are detailed Table 25 (on page 25).
16. Drive Strength is programmable. Numerical values are given in table Table 27 (on page 25).

Pad #	Pad Name	Primary Function	Alternate Function[14]	Direction	Pad type [15]	Voltage	Drive Strength[16]	Reset State
99	GPIO5/PCM_FS	GPIO5	PCM_FS	In/Out	BIDIR	1.8 V	T, L	High-Z
100	GPIO6/PCM_TXD	GPIO6	PCM_TXD	In/Out	BIDIR	1.8 V	T, L	High-Z

Table 12. PCM Pad Details (continued)

Note: PCM/I²S is not yet software supported. It is reserved for future use.

2.7. SPI

Pad #	Pad Name	Primary Function	Alternate Function[17]	Direction	Pad type [18]	Voltage	Drive Strength[19]	Reset state
3	GPIO7/SPI_SDI	GPIO7	SPI_SDI	In/Out	BIDIR	1.8 V	T, L	High-Z
4	GPIO8/SPI_SDO	GPIO8	SPI_SDO	In/Out	BIDIR	1.8 V	T, L	High-Z
2	GPIO9/SPI_CLK	GPIO9	SPI_CLK	In/Out	BIDIR	1.8 V	T, L	High-Z
5	GPIO10/SPI_CSN1	GPIO10	SPI_CSN1	In/Out	BIDIR	1.8 V	T, L	High-Z
7	GPIO11/SPI_CSN2/ USBDRDY	GPIO11	SPI_CSN2/ USBDRDY	In/Out	BIDIR	1.8 V	T, L	High-Z

Table 13. SPI Pad Details

Note: SPI is not yet software supported. It is reserved for future use.

2.8. GPIO

31 GPIOs are available on the DLUS-WI01-NA: the first 27 are named GPIO1 to GPIO27 and the last five GPIO31 to GPIO35 (GPIO32 corresponds to the RESET signal is and therefore unavailable). The GPIOs are documented in this data sheet based on their shared or assigned function.

Pin	Functions	Primary Function	Alternate	Dir.	Pad Type	Voltage	Drive Strength[20]	Reset
12	GPIO1/ STATUS_LED	STATUS_LED	GPIO1	In/Out	BIDIR	1.8 V	T to H	High-Z, T
		Primary Function: Status LED (STATUS_LED, OUT). On when the module is attached to the network, blinks during data transmission.						
13	GPIO2/PS_STATUS	PS_STATUS	GPIO2	In/Out	BIDIR	1.8 V	T to H	High-Z, T
		Primary Function: Power Saving status (PS_STATUS, OUT) enabled by default. Active high.						

14. Alternate functions will be available in future versions via SW upgrade.
15. PCM pad types's electrical characteristics are detailed Table 25 (on page 25).
16. Drive Strength is programmable. Numerical values are given in table Table 27 (on page 25).
17. Alternate functions will be available in future versions via SW upgrade.
18. SPI pad types' electrical characteristics are detailed in Table 25 (on page 25).
19. Drive Strength is programmable. Numerical values are given in table Table 27 (on page 25).
20. Drive Strength is programmable. Numerical values are given in table Table 27 (on page 25).

Pin	Functions	Primary Function	Alternate	Dir.	Pad Type	Voltage	Drive[20] Strength	Reset
98	GPIO3/PCM_RXD	GPIO3	PCM_RXD	In/Out	BIDIR	1.8 V	T, L	High-Z
96	GPIO4/PCM_CLK	GPIO4	PCM_CLK	In/Out	BIDIR	1.8 V	T, L	High-Z
99	GPIO5/PCM_FS	GPIO5	PCM_FS	In/Out	BIDIR	1.8 V	T, L	High-Z
100	GPIO6/PCM_TXD	GPIO6	PCM_TXD	In/Out	BIDIR	1.8 V	T, L	High-Z
3	GPIO7/SPI_SDI	GPIO7	SPI_SDI	In/Out	BIDIR	1.8 V	T, L	High-Z
4	GPIO8/SPI_SDO	GPIO8	SPI_SDO	In/Out	BIDIR	1.8 V	T, L	High-Z
2	GPIO9/SPI_CLK	GPIO9	SPI_CLK	In/Out	BIDIR	1.8 V	T, L	High-Z
5	GPIO10/SPI_CSN1	GPIO10	SPI_CSN1	In/Out	BIDIR	1.8 V	T, L	High-Z
7	GPIO11/SPI_CSN2/ USBDRDY	GPIO11	SPI_CSN2/ USBDRDY	In/Out	BIDIR	1.8 V	T, L	High-Z
36	GPIO12/TXD0	TXD0	GPIO12	In/Out	BIDIR	1.8 V	T to H	High-Z, T
34	GPIO13/RXD0	RXD0	GPIO13	In/Out	BIDIR	1.8 V	T to H	Out-1, T
35	GPIO14/ CTS0	CTS0	GPIO14	In/Out	BIDIR	1.8 V	T to H	Out-1, T
28	GPIO15/TXD2	TXD2	GPIO15	In/Out	BIDIR	1.8 V	T to H	High-Z, T
26	GPIO16/RXD2	RXD2	GPIO16	In/Out	BIDIR	1.8 V	T to H	Out-1, T
27	GPIO17/ CTS2/ DCD0	GPIO17	CTS2/ DCD0	In/Out	BIDIR	1.8 V	T to H	Out-1, T
25	GPIO18/ RTS2/ DSR0	GPIO18	RTS2/ DSR0	In/Out	BIDIR	1.8 V	T to H	High-Z, T
24	GPIO19/TXD3	GPIO19	TXD3	In/Out	BIDIR	1.8 V	T to H	HighZ, T
22	GPIO20/RXD3	GPIO20	RXD3	In/Out	BIDIR	1.8 V	T to H	Out-1, T
21	GPIO21/ CTS3	GPIO21	CTS3	In/Out	BIDIR	1.8 V	T to H	Out-1, T
23	GPIO22/ RTS3	GPIO22	RTS3	In/Out	BIDIR	1.8 V	T to H	Out-1, T
95	GPIO23/I2C_SDA	GPIO23	I2C_SDA	In/Out	BIDIR	1.8 V	T to L	High-Z
97	GPIO24/I2C_SCL	GPIO24	I2C_SCL	In/Out	BIDIR	1.8 V	T to L	High-Z
39	GPIO25/SIM1_IO	GPIO25	SIM1_IO	In/Out	BIDIR	1.8 V	T to H	High-Z, T
40	GPIO26/SIM1_CLK	GPIO26	SIM1_CLK	Out	BIDIR	1.8 V	T to H	Out-0, T
41	GPIO27/ SIM1_RESETN	GPIO27	SIM1_RESETN	Out	BIDIR	1.8 V	T to H	Out-0, T
19	GPIO31/PWM0/ PULSE0/ 19M2_CLK_OUT	GPIO31	PWM0/ PULSE0/ 19M2_CLK_OU	In/Out	BIDIR	1.8 V	T, L	High-Z
9	GPIO33/TX_IND	TX_IND	GPIO33	In/Out	BIDIR	1.8 V	T to H	High-Z, T
		Primary Function: Transmission indicator (TX_IND, OUT): high when the output power exceeds a configurable threshold.						
10	GPIO34/ ANT_TUNE0	ANT_TUNE0	GPIO34	In/Out	BIDIR	1.8 V	T to H	High-Z, T

20. Drive Strength is programmable. Numerical values are given in table Table 27 (on page 25).

Pin	Functions	Primary Function	Alternate	Dir.	Pad Type	Voltage	Drive[20] Strength	Reset
		Primary Function: Antenna tuning (ANT_TUNE0, OUT)						
11	GPIO35/ ANT_TUNE1	ANT_TUNE1	GPIO35	In/Out	BIDIR	1.8 V	T to H	High-Z, T
		Primary Function: Antenna tuning (ANT_TUNE1, OUT)						

In addition to the GPIOs, five WAKE signals are available, documented in Other Signals (on page 16).

2.9. Other Signals

General Information

Pads Type	Pads Number
GND	1, 6, 37, 38, 58, 59, 61, 64, 65, 71, 78, 79, 80, 81, 82, 83, 84, 85, 86, 87, 88, 89, 91, 92, 93
DNC (Reserved)	14, 15, 17, 18, 53, 74, 75, 76, 77, 94

Table 14. GND and DNC pads

Pad #	Name	Primary Function	Alternate[21] Function	Direction	Pad Type [22]	Voltage	Drive[23] Strength	Reset State
72	ADC1	ADC1 (see below)	N/A	In	IN	1.8 V	N/A	N/A
		Analogue to Digital Converter (ADC, IN)						
12	GPIO1/ STATUS_LED	STATUS_LED	GPIO1	In/Out	BIDIR	1.8 V	T to H	High-Z, T
		Primary Function: Status LED (STATUS_LED, OUT). On when the module is attached to the network, blinks during data transmission. An AT command sets it active high (1.8 V). Please refer to the *AT Commands Reference Manual*. It is recommended to add a pull down resistor and an inverter or a MOSFET-N to avoid extra power consumption in the deepest power saving mode.						
13	GPIO2/ PS_STATUS	PS_STATUS	GPIO2	In/Out	BIDIR	1.8 V	T to H	High-Z, T
		Primary Function: Power Saving status (PS_STATUS, OUT) enabled by default. Active high. Should be connected to a test point for debugging and a 100 kΩ pull-down resistor. This pad mirrors the power saving status. • High level: the module is active. • Low level: the module is in low power mode. When the pad is low the modem requires to be woken up using a WAKE signal such as RTS 0, RTS 1 or a dedicated WAKE. PS_STATUS can also be used to turn unneeded external active circuits (such as RF switches on the antenna path) off while in sleep mode.						

Table 15. Other Signals (No Interface)

20. Drive Strength is programmable. Numerical values are given in table Table 27 (on page 25).
21. Functions will be available in future versions via SW upgrade.
22. Pad types' electrical characteristics are detailed in Table 25 (on page 25) and Table 26 (on page 25).
23. Drive Strength is programmable. Numerical values are given in table Table 27 (on page 25).

Pad #	Name	Primary Function	Alternate[21] Function	Direction	Pad Type [22]	Voltage	Drive[23] Strength	Reset State
19	GPIO31/PWM0/ PULSE0/ 19M2_CLK_OUT	GPIO31	PWM0/ PULSE0/ 19M2_CLK_OUT	In/Out	BIDIR	1.8 V	T, L	High-Z
9	GPIO33/TX_IND	TX_IND	GPIO33	In/Out	BIDIR	1.8 V	T to H	High-Z, T
		Primary Function: Transmission indicator (TX_IND, OUT): high when the output power exceeds a configurable threshold (see `AT+SQNHWCFG="txIndicator"` subcommand in the *AT Commands Reference Manual*).						
10	GPIO34/ ANT_TUNE0	ANT_TUNE0	GPIO34	In/Out	BIDIR	1.8 V	T to H	High-Z, T
		Primary Function: Antenna tuning (ANT_TUNE0, OUT). Can be used to drive an antenna tuning circuit, as described in .						
11	GPIO35/ ANT_TUNE1	ANT_TUNE1	GPIO35	In/Out	BIDIR	1.8 V	T to H	High-Z, T
		Primary Function: Antenna tuning (ANT_TUNE1, OUT). Can be used to drive an antenna tuning circuit, as described in .						
20	FFF_FFH	RESERVED	N/A	N/A	BIDIR	1.8 V	T to H	High-Z, T
		Boot mode selection (FFF_FFH, IN). This pad needs a pull-down resistor by default						
46	EXT_RST_N	EXT_RST_N	N/A	In	IN	VBAT	N/A	In, Pull-up
		Module HW reset signal. Active low. The minimum duration of a reset pulse on the EXT_RST_N signal is 100 µs. A 10 pF decoupling capacitor should be placed as close as possible to this pad.						
16	RING0	RING0	N/A	In/Out	BIDIR	1.8 V	T to H	High-Z, T
		UART0 ring line (RING0, OUT). Enabled by default and active low. Signals the host there are data or URC pending on the UART line. A 100 kΩ pull-up (either on the host input or on the PCB) is recommended as this signal transitions to High-Z when the modem enters deep sleep or shuts down.						
48	WAKE0	WAKE0	N/A	In	IN	VBAT	N/A	High-Z
		Wake #0 input line (WAKE0, IN). Disabled by default. When enabled, a high level wakes the modem up from deep sleep mode. Note: there is no current leakage at low level.						
47	WAKE1	WAKE1	N/A	In	IN	VBAT	N/A	High-Z
		Wake #1 input line (WAKE1, IN). Disabled by default. When enabled, a high level wakes the modem up from deep sleep mode. Note: there is no current leakage at low level.						
49	WAKE2	WAKE2	N/A	In	IN	VBAT	N/A	High-Z
		Wake #2 input line (WAKE2, IN). Disabled by default. When enabled, a high level wakes the modem up from deep sleep mode. Note: there is no current leakage at low level. Can also be used to trigger an emergency shut down (module is shut off without notifying the network)						

Table 15. Other Signals (No Interface) (continued)

21. Functions will be available in future versions via SW upgrade.
22. Pad types' electrical characteristics are detailed in Table 25 (on page 25) and Table 26 (on page 25).
23. Drive Strength is programmable. Numerical values are given in table Table 27 (on page 25).

Pad #	Name	Primary Function	Alternate[21] Function	Direction	Pad Type [22]	Voltage	Drive[23] Strength	Reset State
55	WAKE3	WAKE3	N/A	In	IN	VBAT	N/A	High-Z
		Wake #3 input line (WAKE3, IN). Disabled by default. When enabled, a high level wakes the modem up from deep sleep mode. Note: there is no current leakage at low level.						
57	WAKE4	WAKE4	N/A	In	IN	VBAT	N/A	High-Z
		Wake #4 input line (WAKE4, IN). Disabled by default. When enabled, a high level wakes the modem up from deep sleep mode. Note: there is no current leakage at low level.						

Table 15. Other Signals (No Interface) (continued)

Analogue to Digital Converter (ADC1)

The characteristics of the ADC1 pin are given below:

Performance Specification	Description	Value			Unit
		Min.	Typical	Max.	
Voltage Range		0		1.8	V
Tolerance	Input Referred Offset Error		± 1		% FS
Non Linearity				± 1.5	LSB
Resolution	Effective Number of Bits		10		bit
Dynamic Range		71			dB
Input Resistance		3.5	3.9		kΩ
Input Capacitance		1.4	1.7	2.1	pF

Table 16. ADC1 Specification

The ADC1 pin can be used either as a general purpose analogue input, or be part of a special application, such as a SWR meter. Don't connect the ADC1 pin if not used (no need for resistive or capacitive termination).

RING0 Signal

The host MCU has two reasons to monitor the `RING0` line:

- Be warned of a pending URC when the UART is active and in online mode
- Reconnect to the UART to receive URCs and user data

By default, the `RING` line is active low and is asserted when an URC is pending on the UART, whether it is connected or not. It remains low for five seconds. The `RING` line configuration can be modified with the `AT +SQNRICFG` command. The user can decide what event triggers the RING line and how long it remains active.

21. Functions will be available in future versions via SW upgrade.
22. Pad types' electrical characteristics are detailed in Table 25 (on page 25) and Table 26 (on page 25).
23. Drive Strength is programmable. Numerical values are given in table Table 27 (on page 25).

WAKE Signals

Several pins of the module can be used as external wake sources: `WAKE0`, `WAKE1`, `WAKE2`, `WAKE3`, `WAKE4` (`USB_EXT_VBUS_VLD`), `RTS0`, `RTS1`. Additionally `USB_DP` and `USB_DM` can be used to wake up the module using a *USB Resume* procedure.

The external wake signals have two different roles:

- If a wake signal is enabled, active and the platform wants to perform a LPM cycle, this wake signal prevents it to enter the low power state.
- If a wake signal is enabled, active and the platform is in low power, this wake signal wakes up the module.

WAKE inputs must last at least 100 µs in order to insure a reliable detection.

The `AT+SQNHWCFG` command can be used to show the wake source configuration and change it. Please refer to the *AT Commands Use Cases* document for more information.

In addition, as mentioned above in table Table 15 (on page 16), the WAKE2 pin can be used for emergency shut down.

STATUS_LED Signal

The STATUS_LED signal reports when the module is attached to a network. It blinks when the module is transmitting data.

The `AT+SQNHWCFG` command can be used to turn this signal on or off and configure the polarity. Please refer to the *AT Commands Reference Manual* for details on this command.

PS_STATUS Signal

The `PS_STATUS` (Power Saving Status) signal reflects the module sleep mode. It is high when the module is active and goes low when the module enters sleep mode.

When the host processor does not support UART hardware flow control, monitoring `PS_STATUS` together with AT polling is mandatory to ensure no data sent over the UART interfaces are lost.

`PS_STATUS` can also be used to supply power to antenna switches for dynamic matching, or to power any component that needs to be turned on when the modem wakes up.

TX_IND Signal

The `TX_IND` signal toggles when the module is in TX mode and the radiated power exceeds a programmable threshold. The `AT+SQNHWCFG` command can be used to turn this signal on or off and configure the threshold. Please refer to the *AT Commands Reference Manual* for details on this command.

ANT_TUNE Signals

On small PCBs, it is difficult to design a proper antenna matching circuit for a wide range of frequencies. One option consists in switching between different narrowband antenna matching circuits, according to the active RF band. The configuration command `AT+SQNHWCFG="antennaTuning"` can be used to activate, deactivate and configure the antenna tuning signals `ANT_TUNE0` and `ANT_TUNE1`, which in turn drive RF switches to select the proper matching circuit (please refer to the *AT Commands Reference Manual*). One possible configuration is given in the following table:

	Bands 12, 17	Bands 2, 4, 5, 66	All other bands
ANT_TUNE0	0	1	1
ANT_TUNE1	0	0	1

Table 17. Example of antenna tuning configuration

2.10. JTAG

Pad #	Pad Name	Primary Function	Voltage	Direction	Pad type [24]	Reset State
69	JTAG_TCK	JTAG_TCK	1.8 V	In	IN	In, Pull-down, Schmitt-trigger
67	JTAG_TDI	JTAG_TDI	1.8 V	In	IN	In, Pull-up
68	JTAG_TDO	JTAG_TDO	1.8 V	Out	BIDIR	Out, 0
66	JTAG_TMS	JTAG_TMS	1.8 V	In	IN	In, Pull-up
70	JTAG_TRSTN	JTAG_TRSTN	1.8 V	In	IN	In, Pull-down

Table 18. JTAG pads Details

2.11. Antenna

Pad #	Pad Name	Direction	Comments
90	LTE_ANT	In/Out	Main Antenna, for Rx and Tx

Table 19. Antenna pad Details

Important: The DLUS-WI01-NA is designed to work with antennas whose efficiency is at least 40%.

24. JTAG pad types's electrical characteristics are detailed in Table 25 (on page 25).

3. Electrical, RF and Thermal Characteristics

3.1. Power

Power Pads Characteristics

Note: Pad 1V8 is the reference voltage for I/Os. It can be used to provide power to small devices (100 mA maximum usage). This voltage is not available when the modem is in Deep Sleep mode. When the modem is in standby the voltage drops to 1.62 V as per Table 20 (on page 21).

Pad #	Pad Name	Supply	Direction	Min Value (V)	Typical Value (V)	Max Value (V)
8	1V8 (see Note above)	1.8 V	Out	1.62	1.8	1.98
73	SIM_VCC [25]	1.8 V	Out	1.62	1.8	1.98
60, 62, 63	VBAT (USB inactive)	N/A	In	3.2	3.8	5.5
	VBAT (USB active)			3.3		

Table 20. Power Pads

Power-on, Power-off and Reset

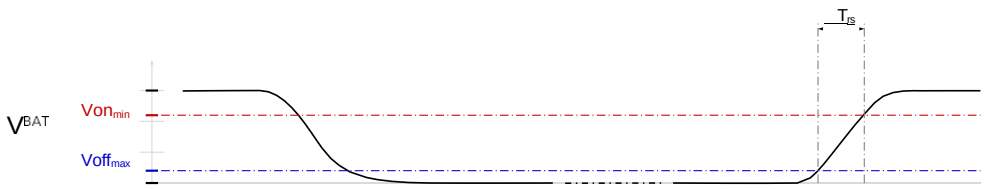

Figure 6. Power Cycle Timing

Name	Description	Min.	Typ.	Max.	Unit
Von_{min}	Minimal ON Voltage	3.2			V
T_{rs}	V_{BAT} Rise Time from $Voff_{max}$ to Von_{min}	1[26]		10	ms

Table 21. Timing values

The value of $Toff_{min}$ depends on the $Voff_{max}$ voltage. The following table gives three typical figures:

Name	Description	Value
$Toff_{min}$ @ 50 mV	Minimal OFF ($V_{BAT} \leq Voff_{max}$) time to insure complete reset when $Voff_{max}$ = 50 mV	0.1 s
$Toff_{min}$ @ 0.1 V	Minimal OFF ($V_{BAT} \leq Voff_{max}$) time to insure complete reset when $Voff_{max}$ = 0.1 V	0.5 s

Table 22. $Toff_{min}$ vs. $Voff_{max}$

25. See also Section USIM Interfaces (on page 11).
26. Shorter rise times can trigger the ESD protection.

Name	Description	Value
$Toff_{min}$ @ 0.2 V	Minimal OFF ($V_{BAT} \leq Voff_{max}$) time to insure complete reset when $Voff_{max}$ = 0.2 V	1 s

Table 22. $Toff_{min}$ vs. $Voff_{max}$ (continued)

CAUTION: V_{BAT} must always be at least equal to Von_{min} during normal operation. Once V_{BAT} has dropped below this threshold, always ensure the voltage keeps on dropping down to $Voff_{max}$ and remains low for at least $Toff_{min}$. Failure to comply, as well as failure to meet the maximum V_{BAT} rising time requirement (T_{rs}) during power-on, can result in erratic behaviour.

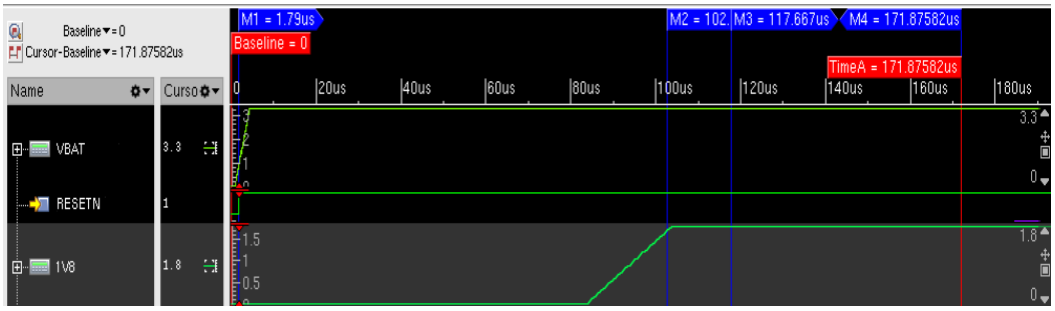

Figure 7. Typical Timing Diagram for Power-Up Sequence

Important: The 1V8 power signal can remain low up to 370 µs after the VBAT rising edge.

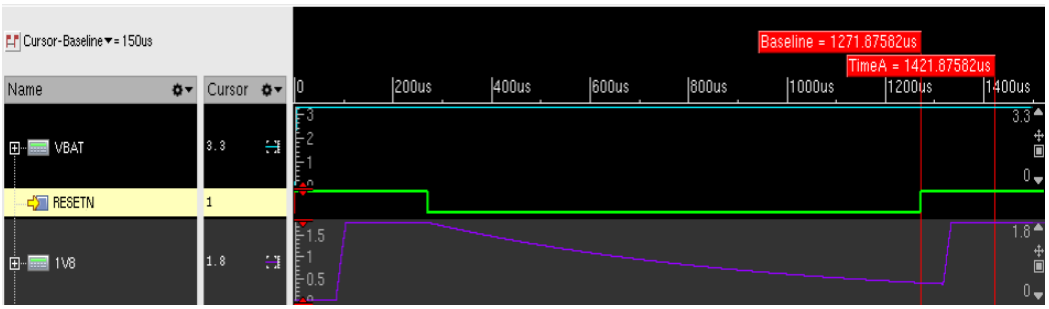

Figure 8. Typical Timing Diagram for Reset Sequence

Note: Since RESETN is pulled-up internally, RESETN does not need to be held low after VBAT is established, as shown in Figure 8 (on page 22). There is no timing condition between RESETN and VBAT.

Note: RESETN minimum duration for reliable detection is 100 µs.

Power Down

Module's powering down is typically triggered by the `AT+SQNSSHDN` command. Once the `+SHUTDOWN` URC is received, a small delay must be observed (typically around 1 s) before switching the power off. Failure to observe this delay might result in data loss (unperformed or incomplete Flash writes).

Power States

Figure 9 (on page 23) represents the electrical states of the module and their transitions.

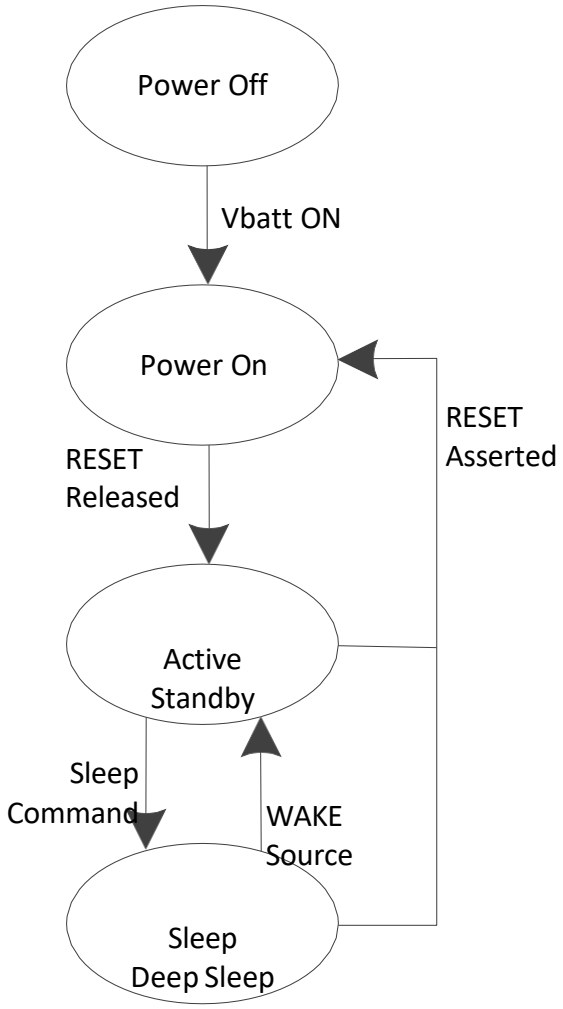

Figure 9. Electrical States and Transitions

Power modes are described in Table 23 (on page 23) and illustrated in Figure 9 (on page 23).

Power Mode	LTE Mode	Available Interfaces
Active	Connected (RF on)	All interfaces
Standby	Connected (RF off)	All interfaces
Sleep	RRC Idle	WAKE pins (including RTS0/1)
Deep Sleep	radio off, airplane mode	WAKE pins (including RTS0/1)

Table 23. Power Modes Description

Pads Voltage per State

The following table details the typical voltage levels of the 1V8 and SIM_VCC pads when the module is in the following states:

- Active: RF on, connected, all interfaces active
- Standby: RF off, connected, all interfaces active
- Sleep: RRC idle period
- Deep Sleep: radio off, airplane mode

State	1V8 pad typ. level (V)	SIM_VCC pad typ. level (V)
Active	1.8	1.8
Standby	1.8	1.8
Sleep	1.6	1.6
Deep Sleep	0	0

Table 24. Power Supply Voltages vs. Current Module State

Test Points and Measurement Access

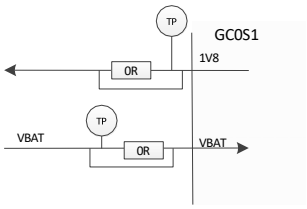

Figure 10. Power Supply System Example

It is recommended to place test points and gaps bridged with 0 Ω SMD resistors on all supply nets to allow for easy voltage and current measurements. The size of the 0 Ω shorting chips should match the width of the supply track, which in turn depends on the current throughput.

3.2. Digital I/O Characteristics

This section details the voltage and current characteristics of the various I/O pads of the DLUS-WI01-

NA. The I/Os belong either one of two power groups:

- 1.8 V
- VBAT

The operational voltage range of both power groups is described in Table 25 (on page 25) and Table 26 (on page 25).

CAUTION: Designers must ensure that the input voltage on any of the I/O pads never exceeds the V_{IH} of the power group they belong to.

CAUTION: V_{OH} values in the tables below do not apply to GPIOs configured in open drain mode. When in open drain mode GPIOs either drive the line to V_{OL}, or leave it floating, to be pulled up by an external resistance. The PCB designer must ensure that the voltage on these pads never exceeds the V_{IH} value of the I/O group the GPIOs belong to.

See Table 25 (on page 25) for the digital I/O characteristics of the different I/O pads. Refer to each interface of the DLUS-WI01-NA in chapter Interfaces (on page 4) for the power group and I/O pad type of each pad. Note that IN pads are inputs only whereas BIDIR can be both inputs and outputs.

Symbol	Minimum	Maximum	Unit
V_{IH} Input HIGH level	1.26	3.3	V
V_{IL} Input LOW level	0	0.54	V
V_{OH} Output HIGH voltage	1.44	1.8	V
V_{OL} Output LOW voltage	0	0.36	V
I_{RPU} Input pull-up resistor current	15		µA
R_{RPU} Input pull-up resistance	27	34	kΩ
I_{RPD} Input pull-down resistor current	15		µA
R_{RPD} Input pull-down resistance	27	34	kΩ
V_H Input hysteresis	0.18		V
I_{PAD} Input leakage current, non-tolerant	-1	1	µA
I_{OZ} Off-State leakage current		1	µA

Table 25. DC Ratings for Digital I/Os, 1.8 V, BIDIR and IN Types

Symbol	Minimum	Maximum	Unit
V_{IH} Input HIGH level	0.8	VBAT + 0.6 (max. 5.5)	V
V_{IL} Input LOW level	0	0.2	V

Table 26. DC Ratings for Digital I/Os, VBAT Type

Drive Strength Class	I_{OH} (mA)	I_{OL} (mA)
T	1.1	1.11
L	2.2	2.25
M	4.4	4.48
H	6.6	6.72

Table 27. Max. DC Current Output/Input per Drive Strength Class

3.3. RF Performance

Important: For proper operation, the VSWR at the antenna pad must be better than 2:1 in conducted mode and 3:1 in radiated mode. A higher value could result either in poor RF performance, reduced Tx power or increased sideband/harmonic emission levels. Very high VSWRs can permanently damage the power amplifier.

It is recommended to add a DC blocking capacitor in series with the module RF input/output pad (#90).

RF Sensitivity for DLUS-WI01-NA module

The figures given below are measured at ambient temperature over a 10-MHz bandwidth using a typical 3.8 V power voltage.

Bands	RF Sensitivity Level (dBm)	3GPP Limits (dBm)	
		CAT 1	CAT 1 bis
25, 2	-99	-93.5/-95	-92
66,4	-98.75	-96.5/-97	-94
5	-99.75	-95	-92.5
12, 17	-99.5	-94	-91
13	-98.25	-94	-91
14	-99	-94	-91

Table 28. RF Sensitivity Figures NA

RF Sensitivity for DLUS-WI01-EU *module*

Bands	RF Sensitivity Level (dBm)
28	-98.75
20	-99.75
8	-99.25
3	-98
1	-99
14	-99

Table 29. RF Sensitivity Figures EU

RF Sensitivity for DLUS-WI01-JP module

Bands	RF Sensitivity Level
All bands	Target: -98 dBm over a 10 MHz channel in typical conditions (ambient temperature)

Table 30. RF Sensitivity Figures JP

RF Output Power

The DLUS-WI01-NA maximum output power within the recommended operating range (from 3.2 to 5.5 V) is given in Table 31 (on page 26).

Bands	Output Power
All Bands	23 dBm ± 1.5 dB

Table 31. RF Max Output Power

3.4. Typical Power Consumption

The power consumption figures given below have been measured on the NEKTAR-C evaluation kit equipped with a DLUS-WI01-NA-NA running the LR9.0.3-60182 (a.k.a Silver1) software. All measurements depend on the actual software release and may change at each update. Please refer to the release note of your specific version for updated power consumption figures.

Scenario[27]	Measure		Unit
	UART used	USB used	
Boot			
Energy consumed during a cold boot	7.56	N/A	µAh
Time from power on to complete cold boot (+SYSSTART URC)	1.2	1.2	s
Energy consumed during a cold boot with secure boot on	N/A	N/A	µAh
Time from power on to complete cold boot (+SYSSTART URC) with secure boot on			
Platform			
Current consumption during shut down	0.97	0.97	µA
Current consumption in airplane mode (AT+CFUN=4)	0.99[31]	500	µA
Current Consumption in Connected Modes[28]			
Connected / Low band / Downlink and uplink traffic at 0 dBm	186[29]	271	mA
Connected / Mid band / Downlink and uplink traffic at 0 dBm	191[29]	283	mA
Connected / Low band / Downlink and uplink traffic at 23 dBm	377[29]	706	mA
Connected / Mid band / Downlink and uplink traffic at 23 dBm	344[29]	625	mA
Current Consumption in Power Saving Mode			
RRC Idle 128, SNR 30 dB (good radio conditions)	2.42	2.54	mA
RRC Idle 128, SNR -5 dB (bad radio conditions)	2.96	2.78	mA
RRC Idle 256, SNR 30 dB (good radio conditions)	N/A	1.49[30]	mA
RRC Idle 256, SNR -5 dB (bad radio conditions)	N/A	N/A	mA
Data Traffic Scenario			
Not Available Yet			

Table 32. Typical power consumption

27. Measurements are made at 3.5 V and ambient temperature.
28. Connected Mode measurements are made at simultaneous maximum uplink/downlink throughput.
29. In UART mode, the throughput is limited by the UART maximum baud rate (3.6 Mbps). During these measurements, UART speed was set to 1 Mbps.
30. USB is in suspend mode.
31. UART is in deep sleep mode.

4. Hardware Design Recommendations

4.1. RF Interface

4.1.1. Circuit Diagram Example

Important: Figure 11 (on page 28) must be strictly followed as a topology reference. It is advised to copy the schematics verbatim. This document also describes the imperative layout constraints.

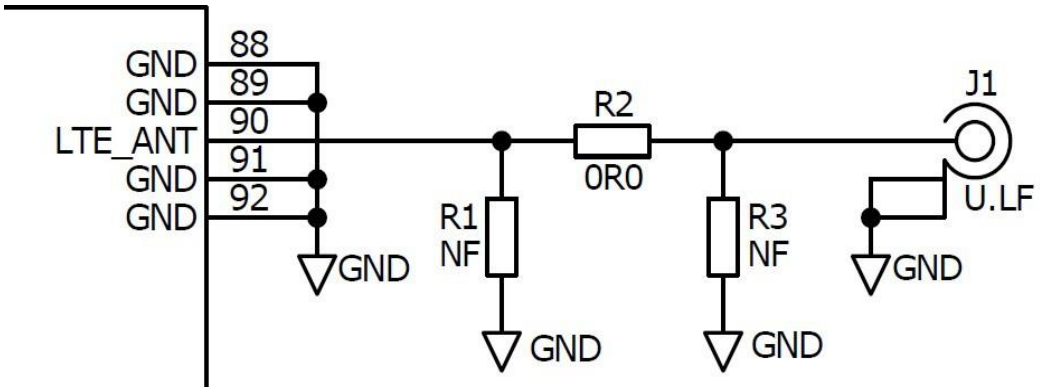

Figure 11. RF Typical Circuit

LTE_ANT is the main antenna pin and serves for both TX and RX signals.

Run a 50 Ω transmission line from this pin to the 50 Ω Primary Antenna/Antenna-connector.

As Figure 11 (on page 28) shows, use a π or T-type network for matching, if needed. This document shows π-type networks, but T-type are equally acceptable.

See Antennas and RF Design Considerations (on page 28) for more detail on connecting to these pins and on the π-type matching network and ESD protection.

4.1.2. Antennas and RF Design Considerations

General Considerations

- For optimal RF performance, power tracks should be preferred over power planes.
- RF tracks must always be kept as short as possible.
- Use many ground vias, especially all over ground patches/islands

π-Type Matching

A 3-component π-type (or T-type) matching network is recommended. The three components of the matching network should be laid out adjacent one to another to minimise the interconnecting tracks' lengths. Use small parts with high Q.

Solder the ground side of the shunt(s) part directly to a ground plane, or use wide and short tracks to minimise the series inductance. The shunt part(s) need not be fitted if matching is unnecessary. The ground plane used for grounding the shunt element(s) of the matching circuit should ideally be the same as the 50 Ω transmission line's reference ground plane.

ESD Protection

ESD protection is a discretionary requirement and only required if necessary, for higher ESD specifications than those of the DLUS-WI01-NA.

It is recommended to select an ESD device with very low parasitic capacitance and a small size (0201) to avoid impacting the RF impedance.

Standard Impedance Transmission Lines

There are four possible methods to design a 50 Ω transmission line:

1. If the RF track runs on the outer metal layer:
   - Microstrip
   - Coplanar waveguides
2. If the RF track runs on an inner metal layer:
   - Embedded microstrip
   - Stripline

Irrespective of which one is selected:

- Pay attention that the maximum insertion loss between the RF pad and the antenna must be kept under 0.5 dB
- Transmission lines EM fields extend beyond the RF track and couple to adjacent layers:

  For microstrip, the lateral gap running along the track must be at least twice the thickness between the track and its underlying ground plane.

  Both in microstrip and co-planar cases, adjacent metal areas must be present and be properly connected to the main ground plane, so as to terminate the fringing EM fields.

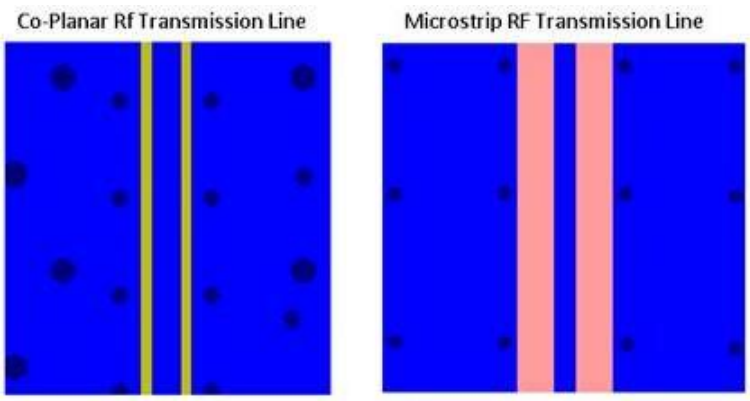

Figure 12. Transmission Line Implementation Examples

Figure 12 (on page 29) provides examples of both transmission line implementations, specifically showing:

1. The distance between the transmission line and the side-running grounded area on layer 1.
2. The periodic via connections connecting the top metal layer to the reference GND layer of the transmission line.

- Avoid routing noisy signal tracks along the RF transmission lines to minimize cross-coupling into DLUS-WI01-NA 's RF ports.
- The component pads of the SMD parts used in the 3-component π-type matching circuit are effectively very short transmission lines. To minimise the RF insertion loss (s_{11} , VSWR) caused by the width step, use tapered ends.

ANT_LTE Specific Footprint Design

The ANT_LTE pad must be considered as a short transmission line whose width is the same as the pad's width. To minimise discontinuity, the ground layer immediately below the pad must be cut out as shown in Figure 13 (on page 30) . Use a quasi-static (in coplanar wave mode) or full-wave EM simulator to compute the extent of the underlying ground area that needs to be removed in order to reach the 50 Ω goal impedance. The recommended clearance between the ANT_LTE pad and the ground plane underneath is 200 µm.

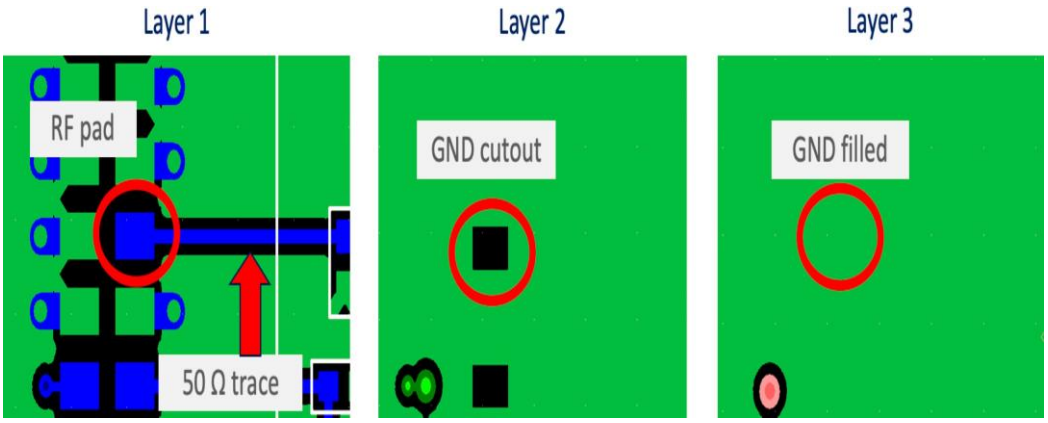

Figure 13. ANT_LTE Pad Design

Because the RF pad is not located on the edge of the module, the section of the RF track that lies under the module must run straight out and be orthogonal to the module's edge.

4.1.3. Antenna Matching Circuitry

The DLUS-WI01-NA supports antenna matching. An example implementation is provided in Calliope 2 reference design that uses two switches and an inverter. Signal matching uses the ANT_TUNE0 and ANT_TUNE1 signals as shown on Figure 14 (on page 30).

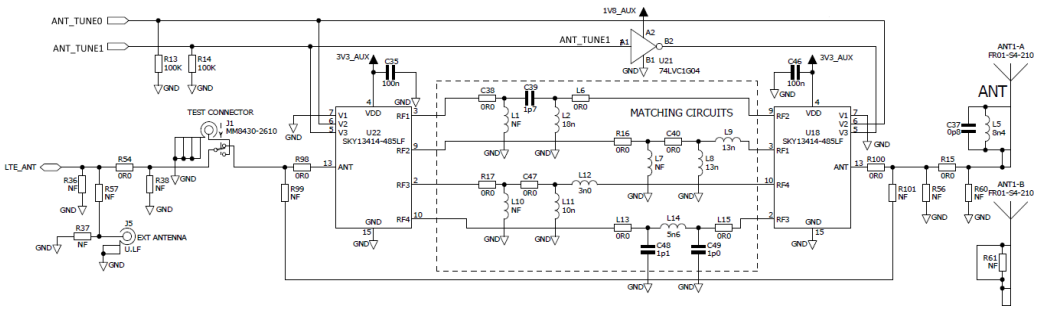

Figure 14. Antenna Matching in Reference Design Schematics

In this implementation, the switches and the inverter are always on. To improve the power consumption, use PS_STATUS to turn the power supply of both switches and the inverter either on or off, as illustrated in Figure 15 (on page 31), where the external ICs are switched off when the module is in low power mode.

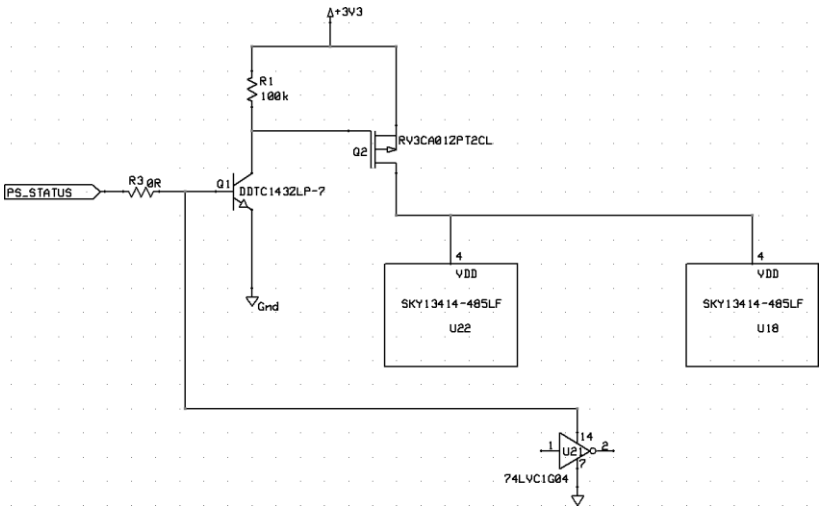

Figure 15. Power Enable Control for Switched and Inverter

4.1.4. Test Points and Measurement Access

Engineering and Production teams need 50 Ω termination points, for example J1 in Figure 11 (on page 28), for the assessment of the RF performance.

It might be needed to check the RF path and/or optimise the π-type matching network. This involves measurements from the pin #90 (LTE_ANT) down to the 50 Ω RF connector. To carry out measures at the pin 90, a coaxial cable (usually Ø 1.25 mm semi-rigid) can be attached to it. It is crucial that a grounded area be available on the top layer next to LTE_ANT (GND pads are typically sufficient) to ensure good RF ground continuity and provide strong mechanical attachment of the coaxial cable itself.

Please refer to Antennas and RF Design Considerations (on page 28) for more detail on RF track design.

4.2. PCB Layout Rules

This section provides general PCB layout good practices.

4.2.1. Placement

Place all the major components blocks before routing any section of the PCB design. Specifically:

- The DLUS-WI01-NA module itself
- The RF interface

Initial placement of these parts allows assessment of the PCB floor layer usage and prevents significant changes to final routed areas of the design, should a placement issue be found. It also provides an opportunity for WNC to review the PCB.

During the placement:

1. Keep the tracks in the same quadrant than the interface they connect to.
2. Consider orientation to avoid track crossing when routing.
3. Keep the parts as close as possible to the DLUS-WI01-NA module where possible.
4. Remember that a patch/on-board antenna radiates EM power that can interfere with the proper functioning of the parts located in its vicinity. Keep sensitive devices as far away as possible from the antenna.
5. Place as many ground vias as possible underneath the module in order to insure both excellent electrical grounding and thermal conduction (see section Thermal Considerations (on page 34))

6. Add test points for critical signals such as UART2 and the FFF_FFH pad.
7. Reserve space for pull-ups (especially on UARTs CTS/RTS and SIM interface signals).

4.2.2. PCB Layers

Use more layers, for example 6 instead of 4, to increase the freedom in burying and shielding RF traces and noisy signals. A 6-layer PCB design fits the need of an evaluation board that contains many signals, . Conversely, a 4-layer PCB design should implement only a minimal set of signals .

4.2.3. Track Design Advice

This section explains some standard design rules applicable to the different types of signals (digital, power supply, RF).

General rules

- Every track is a potential spurious antenna, especially if open-ended. Never route unneeded signals, and keep the tracks as short as possible
- If a track cannot be shortened, try and bury it.
- Manage a large clearance around RF tracks

- Avoid 'via stubs', use through-hole vias only when connecting tracks running on the top and bottom layers. In all other cases, use blind or micro vias.

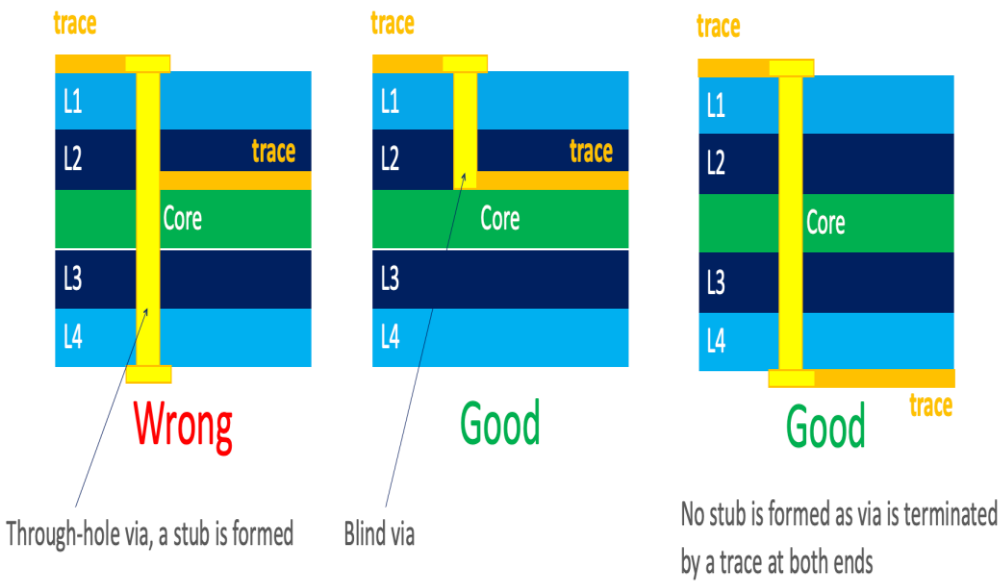

Figure 16. Via manufacturing recommendations

Digital Tracks

1. Careful and sensible placement of digital signals is required to minimise cross-coupling between tracks.
2. Pay attention to ground currents during routing. Make sure that the grounding surrounding the tracks (from source to load) remains continuous, with no notches or gaps. Long and/or winding ground return currents can create EMI problems.
3. Ensure the tips listed in Section Controlled Impedance Tracks (on page 33) are taken into account for digital tracks requiring specific impedance. This is especially the case for USB data tracks (USB_DP / USB_DM) which require 90 Ω differential impedance, with shielded ground planes in adjacent layers (shielded coplanar type tracks).

4. Keep digital tracks with no impedance needs thin to avoid a buildup of capacitance, while keeping them within manufacturing constraints.
5. If tracks are routed one atop the other, keep them orthogonal. Alternate layer tracks' direction to minimise cross-coupling.
6. Important recommendations related to SIM connector placement can be found in the section SIM Recommendations (on page 13) .
7. Shield the clock signal vias.
8. The top and bottom layers should be filled with ground planes interrupted with the minimal number of tracks.
9. Bury as many tracks as possible, especially data (UART, etc) and clock tracks. If it is not possible to bury everything, leave only static signals (such as reset, etc) on the external layers.
10. A few signals can be further filtered, although this is not typically necessary. These signals are:
    - 1V8_LTE, with a π filter. The default BOM has a 0R series resistor.
    - All SIM signals, with decoupling capacitors placed as close as possible to the SIM connector (NF by default).
    - The ANT_TUNE lines controlling the antenna switches, with RC filters. The default BOM has a series 0R resistor.
11. The tracks between the SIM connector and the DLUS-WI01-NA should be kept as short as possible, and away from the antenna.
12. Data and clock signals should be routed as far as possible from the antenna area.

Power Supply Tracks

1. Size the power supply tracks appropriately to provide a low resistance, low impedance source: the recommended width of the VBAT signal must be greater than 1 mm. Pay attention to the number of vias used when routing tracks across multiple layers, as they add spurious series resistance. This is especially true for high current signals such as the PA supply voltage.
2. The decoupling capacitors ground pad of each power supply signal must be connected to the ground return of the source.
3. Keep digital tracks well away from the power supply tracks.
4. WNC does not recommend power planes for this design.

SIM Tracks

Some designers insert serial resistors between the DLUS-WI01-NA SIM pads and the SIM tray interface. These resistors are in no way mandatory, but in case the designer insists on adding them, their value must not exceed 33 Ω or the interface risks malfunctioning. Care must also be taken to avoid excessive series resistance if an EMI filter is placed on the SIM_VCC signal.

RF Tracks

1. Avoid burying these tracks as much as possible, because it increases RF losses w/r to top/bottom routing.
2. Keep tracks as short as possible to help reduce RF losses.
3. Try to mitigate impedance discontinuities. Use tapered ends to improve the matching with SMD pads.
4. Ensure the steps provided in Section Controlled Impedance Tracks (on page 33) are taken into account when setting the track width.

Controlled Impedance Tracks

- Calculation of tracks width and spacing:

  Use simple RF design tools to compute the track's width based on:
  1. The thickness of the dielectric substrate lying between the RF track and its associated ground plane.
  2. The spacing between the track and the adjacent ground plane (on the same layer).
  3. The dielectric constant of the PCB substrate material.

Sometimes the required track width is impossible to manufacture. The design must then be altered until feasibility is guaranteed. Possible solutions:

- Use of a thicker substrate.
- Moving the reference ground plane further down.

Please also note that impedance error increases as the track's width narrows (this is due to mechanical tolerances becoming proportionally more noticeable).

- In general:
  1. Careful placement is required to keep RF tracks short and straight.
  2. Do not route RF tracks on buried layers.
  3. Ground planes beneath RF tracks should be continuous.
  4. The ground plane running along the RF tracks should be kept distant enough to not alter the track's impedance.
- RF matching component footprints:

  Use tapering to minimise impedance mismatch at the end of tracks. If the parts are significantly wider than the transmission lines, the ground reference should be lowered.

Grounding

1. RF ground planes should be as large and continuous as possible and not be cut into chunks. Check that strings of signal vias do not inadvertently create slots in ground.
2. Apply ground plane flooding on all layers.
3. Apply extensive via stitching. Make sure to scatter the vias evenly over the ground planes.
4. Use extra vias around sensitive areas such as RF tracks and noisy lines.
5. Stitch tight all along the board edges to create a Faraday's cage.

4.2.4. Thermal Considerations

This section summarises important design requirements about thermal dissipation. Unless the board is meant to be used in a cold environment, designing for an efficient thermal flow is critical. The temperature of the module, measured by the embedded thermistor, must always remain within acceptable limits (85 °C), especially when the product operates at its maximum permissible ambient temperature in a closed, not vented box.

Module Grounding Pads

- All Gxx pads must be tied to a large ground plane which serves as a thermal sink
- That ground area below the Gxx pads must be stitched with through vias, which conduct heat towards the opposite side of the board
- Besides, adding blind vias surrounding the Gxx pads area help spread the heat flow evenly amongst layers
- If a metal casing is used, it should ideally be in tight contact with the bottom ground layer so as to serve as a terminal heat sink
- If these measures cannot be implemented, or do not suffice, additional elements such as heat sinks, fans or thermal grease (GapPad™) can be used.

4.2.5. Example of a 6-Layer PCB Design

This section details an example of a 6-layer PCB design.

Attention: CAVEAT: SIM and JTAG connectors ought to be placed opposite the antenna side and closer to the module.

1. Top Layer
   - Reserved for RF signals. As few other signals as possible. The rest is a ground plane without islands.

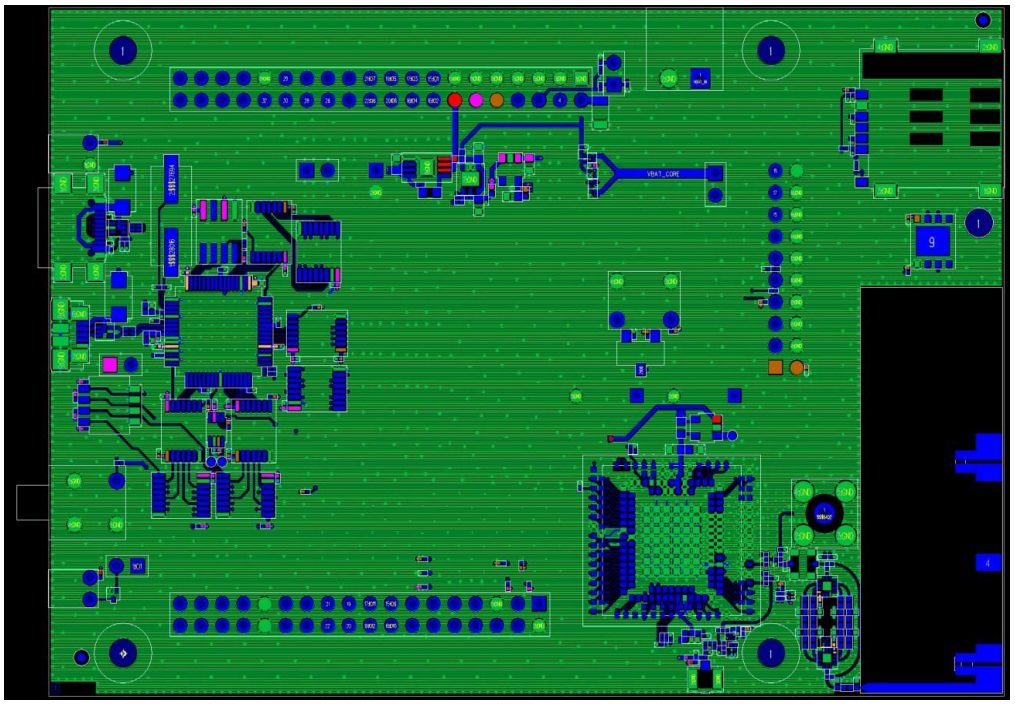

Figure 17. Top Layer View

2. Layer 2
   - Ground plane, no signal
   - Vias are evenly distributed across the surface

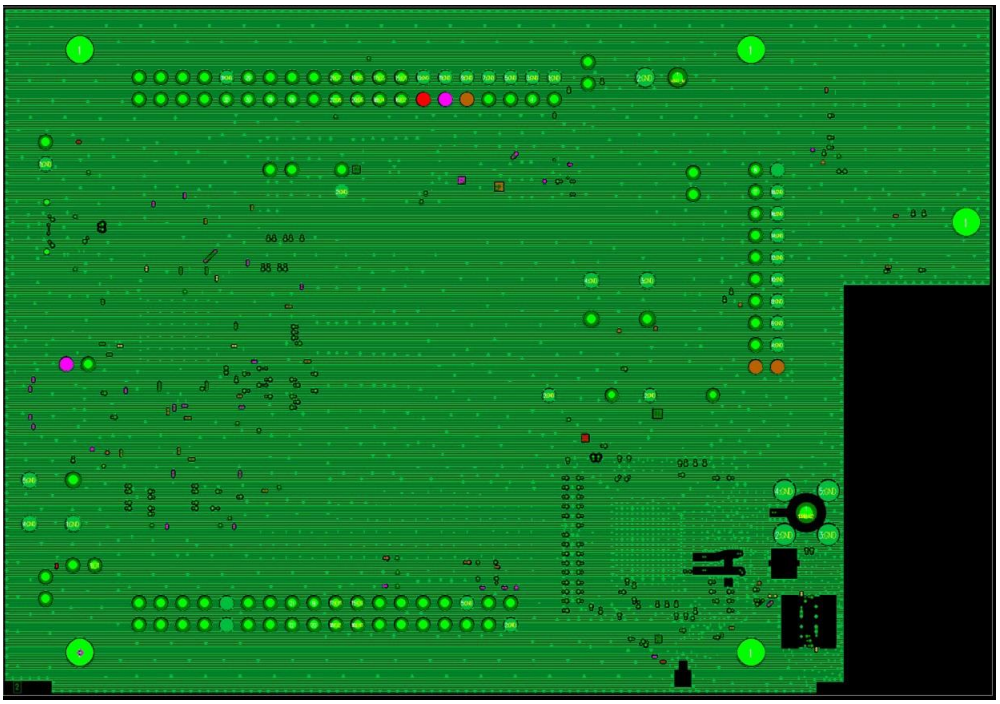

Figure 18. Layer 2 View

3. Layer 3
   - Power traces
   - The remaining space is flooded with ground with proper stitching and even via distribution

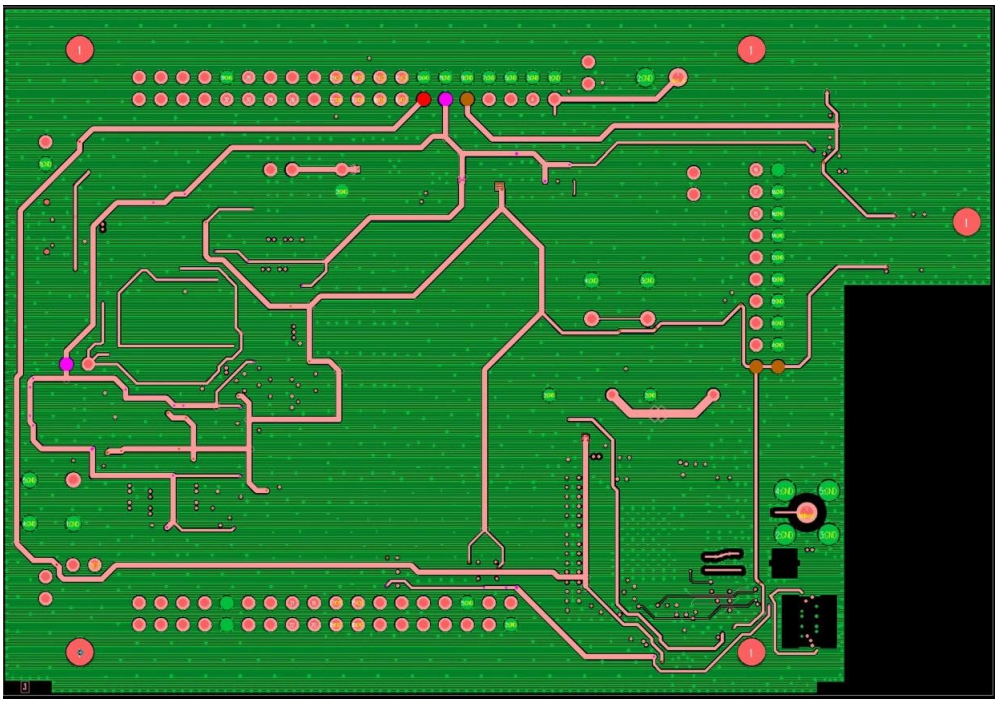

Figure 19. Layer 3 View

4. Layer 4
   - Signal layer
   - All signals are routed vertically on this plane, if possible
   - The remaining space is flooded with ground with proper stitching and even via distribution

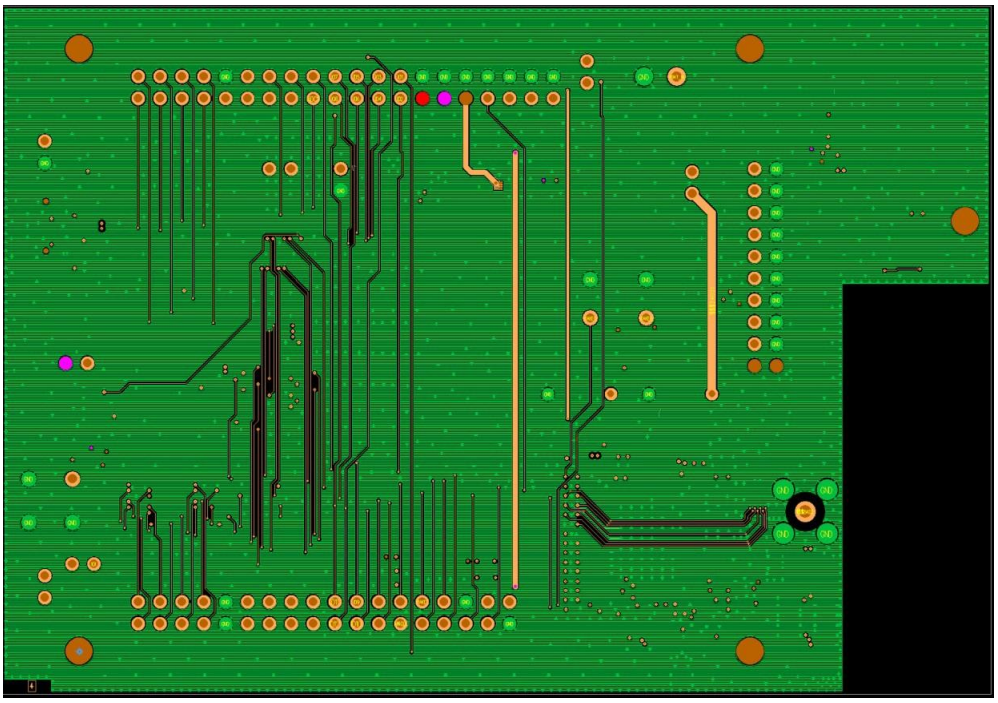

Figure 20. Layer 4 View

5. Layer 5
   - Signal layer
   - The signals are routed horizontally, to minimise cross-coupling with layer 4
   - When this is not possible, precautions are taken to ensure that no layer 4 signal runs atop a layer 5 track
   - The remaining surface is flooded with ground with proper stitching and even via distribution

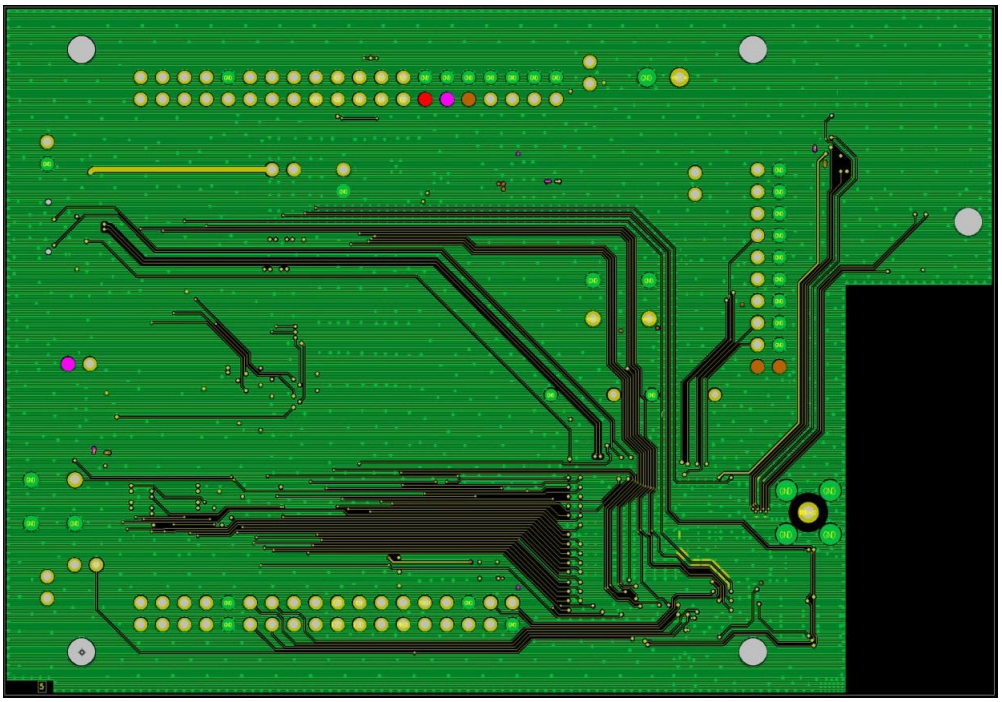

Figure 21. Layer 5 View

6. Bottom Layer

- Minimal signal traces
- Ground plane flooding with a lot of ground stitching (in green)
- The red colour represents 5V0_USB, pink 3V3_AUX, orange 1V8_AUX
- Vias are evenly distributed across the surface
- Tight stitching around the board edges (Faraday's cage)

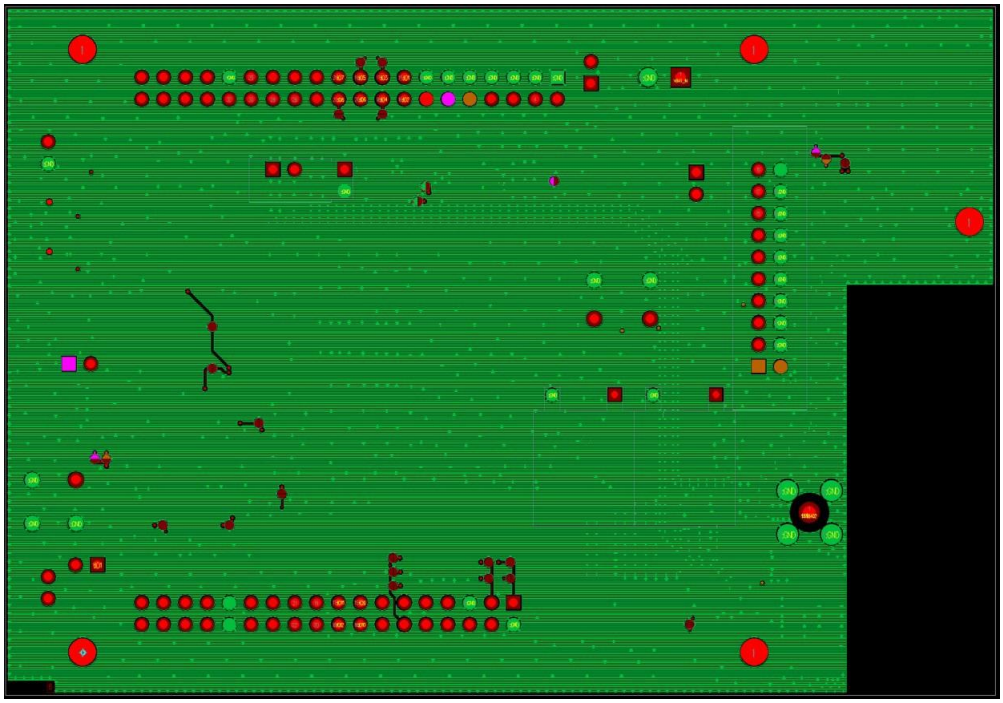

Figure 22. Bottom Layer View

Signals are transferred from the module pads (L1/blue) to the other layers as close as possible using blind and buried vias. Many ground vias are used below the module and around the module to ensure a proper return path to the main ground plane on L2, and aid in thermal dissipation.

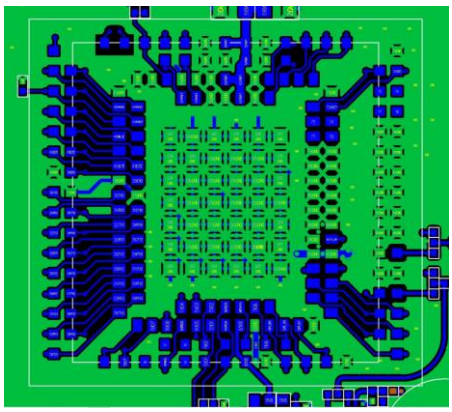

Figure 23. Module Pads (in Blue) on the Top Layer

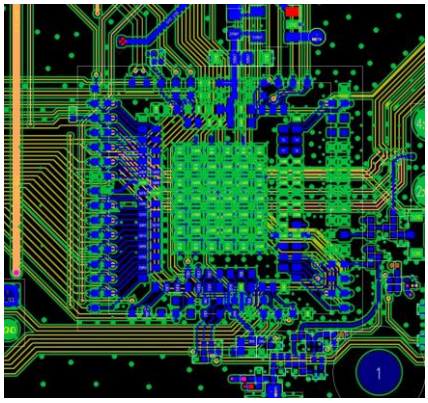

Figure 24. Internal Signals on Layer 4 and 5.

Even if all traces are buried between ground planes, clock signals are also shielded with ground strips. This can be seen on Layer 5, cf. Figure 25 (on page 39).

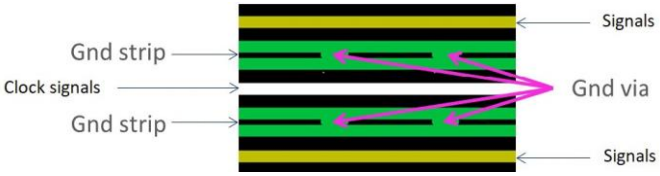

Figure 25. Shielding Clock Signals with Ground Strips

4.3. Hardware Test Preparation

4.3.1. LTE RF Test Preparation

To ensure that the RF test platform provides the most reliable interface for testing, the following setup is recommended for measuring RF characteristics of the DLUS-WI01-NA system.

The shield box cavity is configured as shown on Figure 26 (on page 40):

- The DUT is connected to the computer using the UART 1.
- The DUT is also connected by one RF cable.

> **Important:** It is paramount that RF tests be conducted in a shield box, away from external RF sources. Please also make sure that no cable runs above or below the device under test.

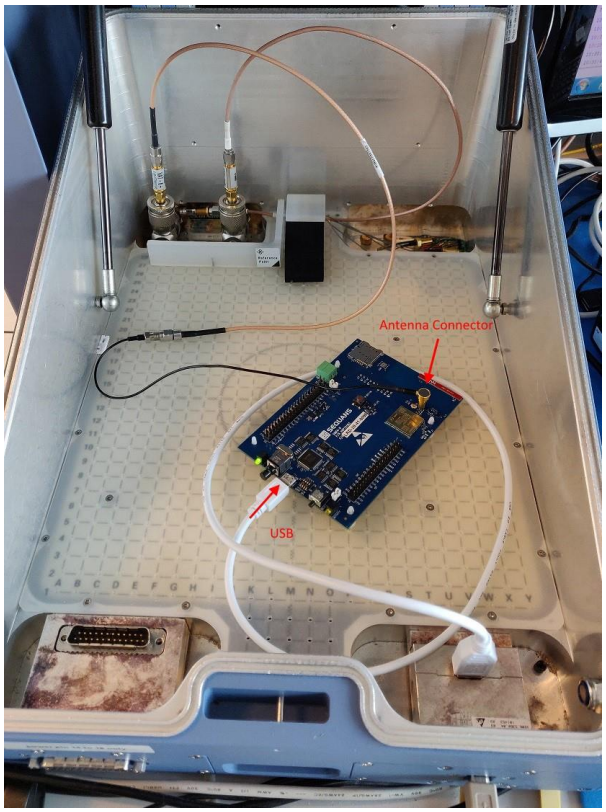

Figure 26. Shield Box Cavity View

Figure 27 (on page 40) shows the required configuration for calibration and screening. It consists of:

- 1 x ZN2PD2-50-S + power splitter if the signal analyser and the signal generator are two distinct equipments. R&S® CMW100 or CMW500 for instance allow the use of a single bidirectional RF port and obviate the need for a power splitter.
- 1 x RF cable to the MXA (if needed)
- 1 x RF cable to the MXG (if needed)
- 1 x RF cable to the DUT (in the shield box)

Figure 27. Configuration for Calibration and Screening

4.3.2. USB and Power Interfacing

A customer board must provide a mean to connect DLUS-WI01-NA USB data interface to a laptop/desktop, while disconnecting it from the on-board host processor (if any) on customer's board. This is mandatory to bring-up DLUS-WI01-NA and start RF tests.

A rewiring of the USB connector is required to provide power to the DLUS-WI01-NA board.

The aim of this rework is to avoid any laptop power supply issue by using an external power supply on Vbus.

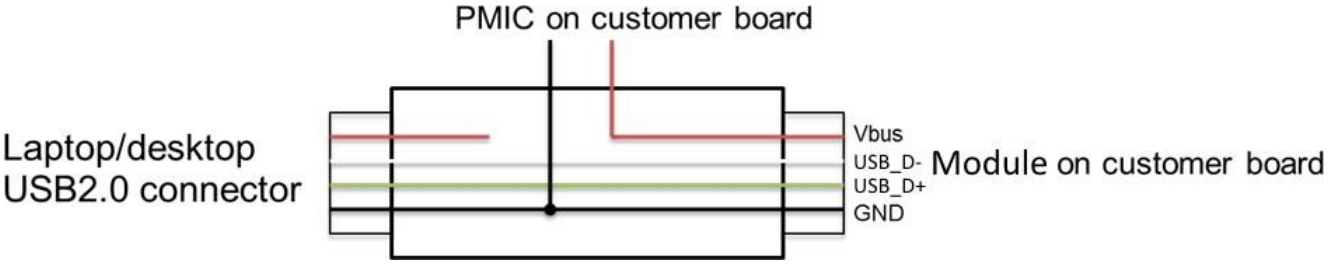

Figure 28. USB Rework Description

The rework procedure is:

- Disconnect DLUS-WI01-NA USB data pads (USB_D+ / USB_D-) from on-board host
- Connect them to the USB 2.0 connector of an external laptop/desktop
- GND shall be connected to customer board and laptop/desktop
- Vbus comes from either an External Power Supply unit of local DLUS-WI01-NA host Supply

4.4. Bring-Up and Testing

4.4.1. Introduction

The purpose of this chapter is to describe board bring-up, test and qualification.

The expectations at this stage are:

1. Any inconsistent and potentially hazardous manufacturing faults must be eliminated.
2. Clearance to proceed with further detailed calibration and measurements.
3. Evaluate the board's performances.

4.4.2. Prerequisites

Hardware Qualification consists of:

- Checking for RF losses between the DLUS-WI01-NA RF ports and the board's RF output
- A sanity check of the connections to the DLUS-WI01-NA
- Debugging, if necessary

Hardware Qualification procedures make use of:

1. An external Host PC / Laptop for monitoring the UART 1 interface

   Note: Detailed information will be provided in a future revision of this document.

2. LTE RF test equipment:

a. A shielding box to avoid any RF interference caused by the environment
b. RF components such as: cables, splitters, 50 Ω dummy loads

3. A power supply with ammeter

4.4.3. Power Supply

Test Procedure

Figure 29 (on page 42) presents the necessary equipment and the configuration to perform the power supply test.

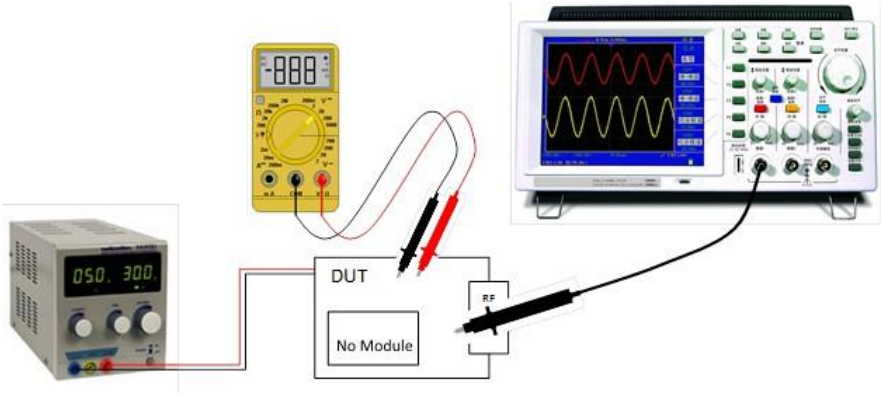

Figure 29. Pre-Test Configuration (No Module on Board)

Test voltage values: test the voltage delivered by the power supply with an oscilloscope before connecting the DUT. The voltage level must be correct and ripple-free. Once this is checked, the DUT can be powered and the test points' voltages measured with a multimeter. At this stage, only VBAT1 can be tested.

Check at each voltage test point, as illustrated on Figure 30 (on page 43), that the voltage value corresponds to what is expected. The value of VBAT1 must be in the range specified in the *DLUS-WI01-NA Data Sheet*, section *Electrical Operating Conditions*.

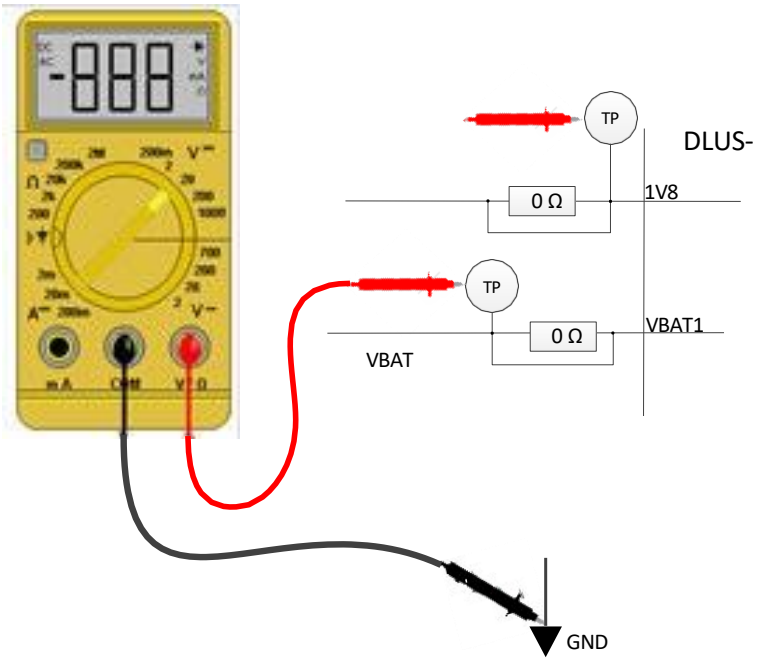

Figure 30. Measuring Voltage Value (DLUS-WI01-NA)

Troubleshooting

If the VBAT1 voltage is incorrect, check any resistor link to detect unexpected short or open circuits.

4.4.4. Confirm Module Power-Up Operation (UART 2)

An extract of the output of the OS console on UART 2 port is provided below (boot in FFF mode):

```
[0000000000] boot: Switched to flash, timeout 10000, proto  thp
[0000000000] Running on Windbond flash sector 0x1C030000
[0000000000] RBBombyx 11.11@50892 '8.0.0.0 [50892]'
[0000000004] Reset cause 'BUTTON' (real 'BUTTON') (bootWDG  : '0') [rawRst '0x00000001']
[0000000012] regConfig 0x1BBB0BA3@1
[0000000015] boot: Current flash, timeout 10000, proto thp
[0000000020] boot: FFF mode
[0000000179] elf: ELF format selected
[0000000183] elf: Header finished
[0000000186] elf: Waiting for 480 bytes
[0000000189] elf: PH 0x00333DE0, 28 bytes
[0000000193] elf: Note 0x63727A04
[0000000196] elf: PH 0x00000000, 20 bytes
[0000000200] elf: Note 0x4D415000
[0000000203] elf: PH 0x00001000, 86 bytes
[0000000207] elf: PH 0x00001060, 1920 bytes
[0000000210] elf: PH 0x000017E0, 119824 bytes
[0000000218] elf: PH 0x0001EBF0, 8 bytes
[0000000221] elf: PH 0x0001EBF8, 56 bytes
[0000000225] elf: PH 0x0001EC30, 100 bytes
[0000000229] elf: PH 0x0001EC94, 624 bytes
[0000000233] elf: PH 0x0001EF04, 2676 bytes
[0000000237] elf: PH 0x00336000, 32 bytes
[0000000240] elf: PH 0x00710000, 196656 bytes
[0000000249] elf: PH 0x00750000, 129576 bytes
[0000000257] elf: PH 0x007A0000, 325728 bytes
[0000000269] elf: PH 0x00334000, 8192 bytes
[0000000273] elf: Program Header finished
[0000000277] sbp: no ACPU found
[0000000280] sbp: MCPU Booting at 0x1C1002F0...
fs: Mounting /flash0...done
fs: Overlay filesystem mounted on /fs
[USIM] PSI USIM rev = 2
[USIM] Default slot=0 itf=0 OK
```

```
[USIM] ITF(0) slot(0) enabled(1) polling(0)
[USIM] ITF(1) slot(0) enabled(0) polling(0)
[USIM] ITF(2) slot(0) enabled(0) polling(0)
>INFO> DCP : Init over='serial'
eem: Memory initialized
#WARN# ATF : can't find device related to id=4!
[PSP] initializing
fs: Mounting upgrade filesystem ...
fs: Mounting done
QKI pools init...done
rrcInitCallbacks 440
RrcPersistEco - error: 'rootFsDir' is unresolved
feeds: 510 Configure enter EAPPS
feeds: 520 Configure leave EAPPS
feeds: 520 Configure enter MQTT
feeds: 520 Configure leave MQTT
feeds: 530 Init enter EAPPS
feeds: 560 Init leave EAPPS
feeds: 560 Init enter LWM2M
feeds: 560 Init leave LWM2M
feeds: 560 Init enter MQTT
feeds: 560 Init leave MQTT
feeds: 560 Init enter SQNSMS
feeds: 570 Init leave SQNSMS
[PSP] initialized
[PSP] starting
reserved room 7/150
::hell terminal::
-> [ZSP0] started after 2 ms, version 261.6
[ZSP1] started after 1 ms, version 261.1
ue: Waiting for LCPU IRQ...done
xpc (mcpu): Initalized
xpc (lcpu): Initalized
done
ue: Waiting for LCPU DLP to start...dLPU boot confirmation
done
ue: Waiting for LCPU to run...[L1P] started
hp: Started
feeds: 960 Start enter EAPPS
feeds: 1180 Start leave EAPPS
feeds: 1180 Start enter LWM2M
feeds: 1190 Start leave LWM2M
feeds: 1190 Start enter MQTT
feeds: 1190 Start leave MQTT
feeds: 1190 Start enter SQNSMS
feeds: 1200 Start leave SQNSMS
[PSP] started
```

4.4.5. GPIOs

Procedure

This section helps confirm GPIO's behaviour.

Use the manufacturing AT command `AT+SMGT`.

> Note: The manufacturing AT commands are available when the device has been brought into manufacturing mode with the `AT+CFUN=5` command.

The first 32-bits triplet of parameters is a bit-mask to address the GPIO, the second 32-bits triplet of parameters is the bit-mask of the value the GPIO must take, and the third 32-bits triplet provides the expected polarity setting for the GPIO. Refer to *AT Commands Reference Manual* for more detail on this command.

The following command tests the DLUS-WI01-NA's GPIO_22 (GPIO[22]) setting to 1, active high. Value 22 is represented by the bitmask `0x400000`, (= 2^{22}) coded as the triplet `0,0,0x400000`.

```
AT+SMGT=0,0,0x400000,0,0,0x400000,0,0,0
```

The following command tests DLUS-WI01-NA_GPIO_38 (GPIO[38]) setting to 1, active low. Value 38 is represented by bitmask `0x4000000000`, (= 2^{38}) coded as the triplet `0,0x40,0`.

```
AT+SMGT=0,0x40,0,0,0x40,0,0,0x40,0
```

Test the expected behaviour as needed by your implementation.

Troubleshooting

- Unexpected AT command error:
  1. Make sure that you activated the Manufacturing mode with `AT+CFUN=5` before trying to use the `AT+SMGT` command.
  2. Make sure that the version of the firmware used is the correct one.
- Unexpected GPIO behaviour:
  - Ensure that there exists no short or open circuit between the test point and the DLUS-WI01-NA.

4.4.6. SIM Communication

Procedure

Confirmation of SIM behaviour:

Use the following commands to verify the SIM is working properly:

1. Send `AT+CMEE=2` to activate error logs.
2. Send `AT+CFUN=4` to start reading the SIM card.
3. Wait 10 seconds.
4. Send `AT+CIMI`. It will answer either:
   - `+CME ERROR: SIM not inserted` if no SIM card was detected
   - `+CME ERROR: SIM busy`. Wait for a few more seconds and check if the IMSI is returned. If not, please refer to section Troubleshooting (on page 45).
   - `<IMSI value>` if the test completed successfully
5. Alternatively, the `AT+SMST` command can be used in manufacturing mode to test the SIM connectivity:

   ```
   AT+CFUN=5
   OK
   AT+SMST=1
   +SMST: OK
   OK
   ```

   If there is no communication with the SIM card, then the commands fails:

   ```
   AT+SMST=1
   +SMST: NO SIM
   ```

Troubleshooting

- Unexpected AT command error:

  Make sure that the version of the firmware used is correct.
- Unexpected SIM behaviour:
  - Check all the connections between the SIM housing and ensure the board respects the recommendations detailed here (on page 13).
  - Check for short or open circuits between the SIM housing and the DLUS-WI01-NA.
  - Check ground continuity on all SIM housing ground pins and casing.

5. MANUFACTURING

5.1. Module Configuration

The following sections describe how to read, modify and save the module configuration in manufacturing mode.

5.1.1. Read Device Data

The list below details all the identity elements and software and hardware versions that can be read from the device.

- Read product's manufacturer, model and software version.

```
ATI0
WNC Communications
DLUS-WI01-NA-NA
UE9.0.1
OK
```

- Read product's software version and firmware release.

```
ATI1
UE9.0.1
LR9.0.1.0-59060
OK
```

- Read product's serial number and IMEI.

```
ATI2
SERIAL: C2C2208240006009
IMEISV: 0160740000052700
OK
```

- Read manufacturer identification

```
AT+CGMI
WNC Communications OK
```

- Read product's IMEI

```
AT+CGSN=1
+CGSN: "016074000005279"
OK
```

- Read product's SVN (Software Version Number)

```
AT+CGSN=3
+CGSN: "00"
OK
```

5.1.2. Customise Hardware Configuration

Enable Manufacturing Mode

In order to enable manufacturing mode, please use AT command:

```
AT+CFUN=5
OK
```

In manufacturing mode, specific AT commands can be used. Please refer to the *AT Command Reference Manual* for the details on the manufacturing AT commands.

Each change requires the following steps:

1. Modify the HW configuration of the module
2. Reboot the module with `AT^RESET` to apply the modifications
3. Create a restore point

It is possible to modify the configuration of the following hardware interfaces of the DLUS-WI01-NA:

- UART
- USB
- Wake pins
- Antenna tuner configuration
- SIM interface

Examples of common modifications during product manufacturing are provided in the following sections.

UART Management (Hardware Configuration Change)

The 3 UART interfaces are configured by default as listed in Table 33 (on page 47).

UART#	Baudrate	Flow Control	Application	Wake Source	Manufacturing Upgrade
UART0	115200	Enabled	AT	Yes	Yes
UART1	921600	Enabled	AT	Yes	Yes
UART2	115200	Disabled	Console	No	No

Table 33. UART Ports Default Configuration

Both UART0 and UART1 can be used during manufacturing. Typically, UART0 is connected to MCU host and is used only if the manufacturing process happens via the MCU host. If this is not the case, then UART1 shall be used for manufacturing process. In this case the board shall provision the necessary connector or test points to use UART1.

Note that both UART0 and UART1 have their wake source on RTS enabled by default. This means that the module can be waken up from low power mode with either UART. In addition both are configured by default to receive AT commands.

Note: If two AT ports are enabled by default, all URCs will be sent by the modem to both of them. Not flushing these URCs will prevent the modem to enter into deep sleep mode.

If UART1 is being used for manufacturing, disabling the wake and putting the UART in DCP mode should be the last step of the manufacturing process:

```
AT+SQNHWCFG="uart1","enable","rtscts","921600","8","none","1","dcp"
```

See section Wake Pins Configuration (on page 48) for details on wake function disable.

Changing back UART1 to AT mode can be achieved via UART0.

In addition to the above mentioned considerations, the AT sub-command `AT+SQNHWCFG="uartX"` can be used to configure the baud rate and flow control of any UART. When making these changes, keep in mind that they only apply after next reset.

Wake Pins Configuration

Wake function can also be configured by AT command.

For instance, if UART1 needs to remain accessible during the lifetime of the product for field upgrades or debug, the `wakeRTS1` function can remain enabled (this is the recommended setting). In this case a pull-up needs to be provisioned in the hardware design. Alternatively it can be disabled with AT command:

```
AT+SQNHWCFG="wakeRTS1","disable"
```

Antenna Tuning Configuration

The DLUS-WI01-NA supports antenna tuner feature based on GPIO control. A typical HW implementation example, implemented in the DLUS-WI01-NA NEKTAR Evaluation Kit, is detailed in section Antenna Matching Circuitry (on page 30).

Customise Primary and Alternate Pin Functions

AT Command `AT+SQNHWCFG` is to be used to configure primary and alternate module's pins functions as described in the data sheet. However, please contact first your WNC' representative to confirm the software support of the function.

Block Debug Ports

It is highly recommended that once in mass production, the device blocks the debug ports as part of the manufacturing process. This may be required to meet certain security certifications and it is overall a good security practice.

On Calliope 2 products, the debug ports are:

- UART1
- UART2
- USB
- JTAG

All of them can be disabled via the AT command `AT+SQNHWCFG`.

Please refer to *AT Reference Manual* and to *Use Cases with AT Commands* documents.

Notes:

1. UART1 and UART2 can be enabled again through UART0, so it is the host MCU responsibility to control access to the modem's UART0 .
2. Once JTAG is disabled, it can't be enabled again (it uses a fuse mechanism).

5.1.3. Customise Software Configuration

Configure Frequency Bands

The AT Command `AT+SQNBANDSEL` specifies a list of 4G LTE bands the modem is allowed to use for different Radio Access Technologies (RATs) during all cell search operations.

Configure Device Profiles

The AT Command `AT+SQNDMCFG` edits preloaded profiles. Any default device management connectivity configuration override is made under user's own responsibility and may lead to connectivity failure or non-compliance with device management service security rules.

Configure Conformance Test mode

The AT Command `AT+SQNCTM` changes the conformance test mode of the device to comply with the specific MNO requirements. This command resets the modem and should be executed as the last step in the configuration process.

5.1.4. Save Device Configuration

Once the settings and modifications are done, it is mandatory to issue the AT command `AT+SQNFACTORYSAVE` in order to save into the module that configuration as the default one, and create a restoration point.

```
AT+CFUN?
+CFUN: 5
OK
AT+SQNFACTORYSAVE="OEM"
OK
```

The AT command syntax is detailed in the *AT Commands Reference Manual*.

In case a factory reset (see below) is needed, the restoration point provides the new default values.

Factory Reset

The aim of this operation is to restore the parameters set during the OEM manufacturing phase.

> **!** Important: To perform a reset of the modem to factory settings, please note that a restoration point MUST have been created using the command `AT+SQNFACTORYSAVE`.

To perform a reset to customer saved configuration, use the command `AT+SQNFACTORYRESET`.

The AT command syntax is detailed in the *AT Commands Reference Manual* and the *AT Commands Use Cases* documents.

The restore point previously created using `AT+SQNFACTORYSAVE` is used.

```
AT+SQNFACTORYRESET
OK
AT^RESET
OK

+SHUTDOWN

+SYSSTART
```

5.1.5. Update the Flash Software Image

DLUS-WI01-NA modules are delivered with an embedded software, described in the device part numbers table at the beginning of this document. Depending on your needs, you may be required to perform a modem software upgrade during the manufacturing process. WNC provides an upgrade tool called "SFU". Please refer to the *SFU Upgrade Tool User Manual* for all details, available in WNC' cloud.

- DLUS-WI01-NA supports software upgrade over all UART and USB interfaces
- DLUS-WI01-NA supports differential software upgrade. Please contact WNC support team to get differential software packages, depending on your needs.

The SFU tool allows upgrade in two modes, "upgrade" and "raster". The "upgrade" mode takes a `.dup` file as input, whose format is described in the *SFU Upgrade Tool User Manual* document. It typically upgrades only the modem part (either full or differential upgrade). For instance:

```
sfu upgrade -z 2 -b 921600 COM45 DLUS-WI01-NA-EU1_REL10_LR9.0.1.0-59060.dup
```

For each software delivery, WNC provides a *Software Release Note* that describes the method and exact command to use to perform the upgrade.

5.2. Functional Verification with Assembled Module

Attention: If a fault is discovered, consider the impact of the issue observed on all manufactured samples.

The purpose of this section is to validate the assembly process of the module.

This test covers the following DLUS-WI01-NA's pins and features:

1. Power supply
2. UART 1 console output during power-up operation
3. SIM Interface
4. GPIOs
5. ADC
6. The nominal power consumption
7. DLUS-WI01-NA's boot
8. GNSS Performance

5.2.1. Power Supply

Procedure

1. Turn on the device under test.
2. Confirm that the current delivered by the Host power supply is nominal

Troubleshooting

- If excessive current is drawn, check all DLUS-WI01-NA supply pin for short circuits. Voltages should be at their nominal values.
- If no, or very little, current is drawn, either check the external power supply wiring or look for dry joints between adjacent pin(s) and the power supply source.

5.2.2. RF Test Environment

Test Setup

A simple test setup such as described in Figure 31 (on page 51) is required which can be performed "over the air" OTA.

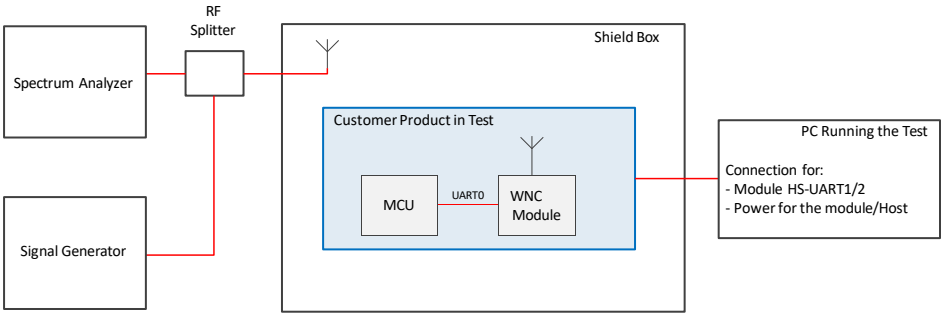

Figure 31. Test Setup Representation

1. Shield Box

   It is possible to make measurements without a Shield Box but it does provide isolation from both interfering signals which could compromise the measurement taken & also antenna Field changes because of local environment.

2. Spectrum Analyser

   to measure the RF power coming from the DLUS-WI01-NA

3. Signal Generator

   to provide the RF signal to catch and measure on the DLUS-WI01-NA

4. PC

   Interface to control the DLUS-WI01-NA and execute RF test commands

5. RF splitter

   Needed to share the RF path between both equipments.

6. Test fixture

   Houses the Test Equipment Antenna & the device under test. Some recommendations:

   - Shield box should be lined with a type of RF absorption material, to reduce internal RF reflections & avoid large variations in measurements
   - RF Attenuation target should be > 50dB for all bands of operation
   - Digital & Analogue signals should pass through decoupled chassis mount interfaces
   - The DUT should sit in some type of bedding. This helps improve the measurement reliability as the DUT location is repeatable

7. Antenna

   Should be broad band. High Gain (very directive) would be preferable but not compulsory.

8. Interfacing signals

   Should be tied/fixed down within the shield box, not left loose. This is to avoid changed in the RF signal field withing the box.

Test Overview

Every Product should be tested for it its capability to Transmit & to Receive for any test type (signalling or non-signalling) . It should be performed:

- All product bands of operation
- 3 Frequencies : low, mid and high
- One TX power level, 23dBm
- One RX signal level -45dBm

5.2.3. Calibration of the RF Setup

Over-the-Air (OTA, or radiated) measurements can never be as accurate as those used for conducted measurements, but it is important to ensure that the setup is made as accurate as possible. The following information can help with this.

To ensure that the measurements are reasonably accurate, the RF Path Losses from the DLUS-WI01-NA module antenna to the Shield Box antenna need to be calibrated. This can be done by the following procedure:

1. Place a reference “golden” product into the Shield Box. The conducted RF performances, especially TX power measurements at 23dBm, for this reference “golden” product must be known.
2. Record the TX power measurements for each band of operation
3. For each band of operation, compute the difference of the conducted reference power measured vs the radiated power measured. These values are recorded as the Band path losses.
4. Remove the reference “golden” product from the Shield Box
5. Each RF path loss is then used to correct the TX and RX measurements as follows:
6.
   - TX: the loss value is added to the Integrated Tx Power Measurement
   - RX: the Signal Generator Signal is increased by the path loss value

Notes:

1. It is recommended to repeat steps 1 to step 4 at least 5 times.

   This allows to catch any possible measurement variation due to subtle changes in RF signal propogation within the Shield Box. This variation would also need to be included into Pass/Fail Criteria for the TX and RX measurement limits.
2. Any adjustment to the Shield Box internal arrangement (antenna moved, bedding shape changed or moved, supply and communication cables adjusted) impacts the measurements. In such case, the process shall be repeated.

5.2.4. Testing in Non-Signalling Mode

The procedure to test Rx and Tx performance in CW mode will be detailed in a future release of this document.

5.2.5. Testing in Signalling Mode

Make sure that samples of the product are routinely checked for RF performances in signalling mode. ‘Routinely’ means here to randomly test a sample of a product from manufacture batches.

A specific test equipment, such as CMW500 with signalling software, is required to perform signalling mode test, including connection and RF measurement to emulate a real LTE Category-1 connection.

This CMW500 replaces the Signal Generator and the Spectrum Analyser shown in Figure 31 (on page 51).

Simply power up the module (configured in auto-connect mode) and it should automatically attach to the tester.

5.3. Storage and Mounting

Storage Conditions

The DLUS-WI01-NA module is Moisture Level 3 rated as per JEDEC industrial standard.

Reflow Profile

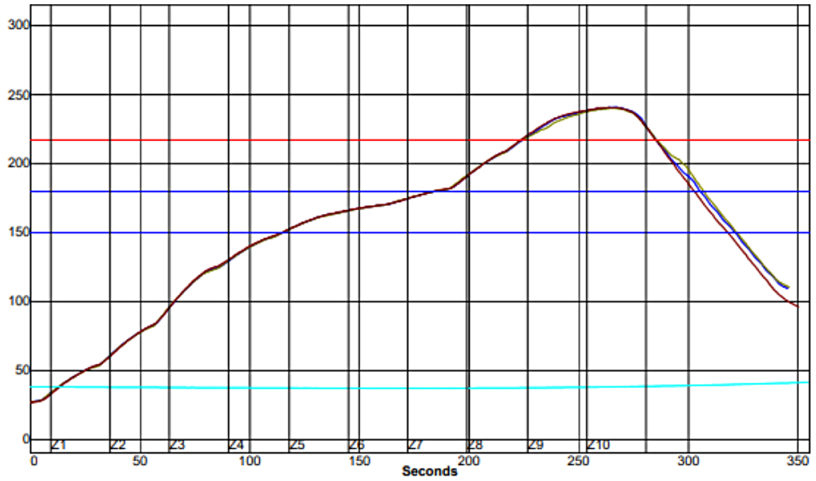

Figure 32. Reflow Profile Parameters

Parameter	Min. Value	Max. value	Unit
Slope between 25 and 150 °C (averaged over 20 s.)	0.5	4	°C/s
Max. falling slope (averaged over 1 s.)	-4	-1	°C/s
Soak Time from 150 to 180 °C	60	120	s
Time spent above reflow temperature (217 °C)	45	90	s
Peak Temperature		245	°C
Number of Possible Reflows		3	

Table 34. Reflow Parameters

5.4. Reliability Specification

The DLUS-WI01-NA reliability figures will be provided in a future release of this document.

6. Mechanical Characteristics

6.1. Package Description

The package size with tolerance is (19.5 ± 0.10) mm × (21.0 ± 0.10) mm × (1.9 max) mm. Maximum 'warpage' is 0.13 mm (as per JEITA ED7306).

The DLUS-WI01-NA weighs 1.78 g.

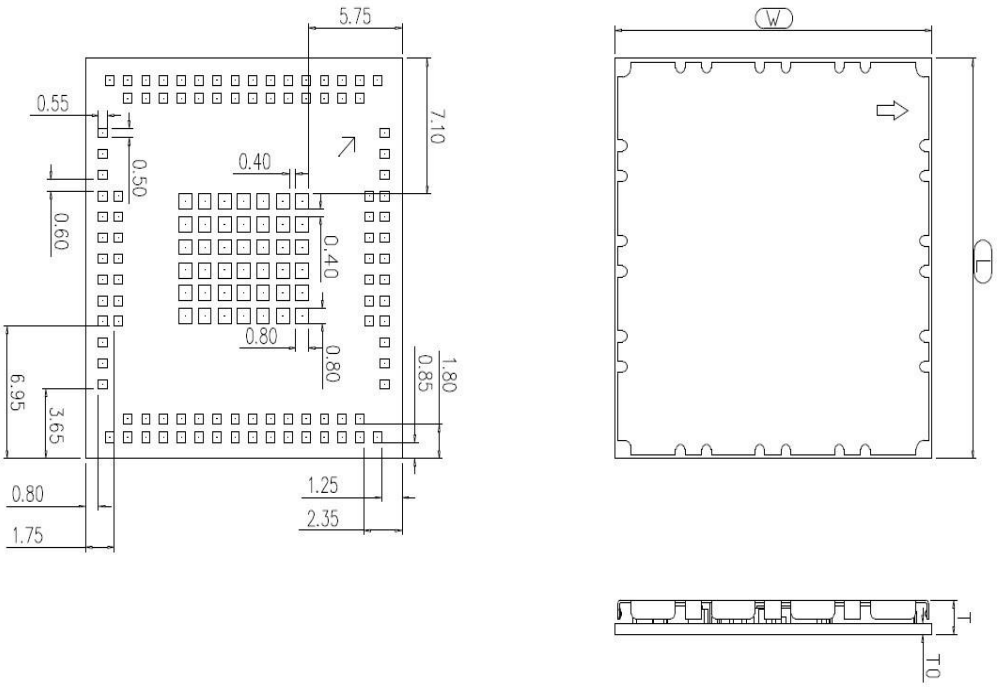

Figure 33. Module PCB View

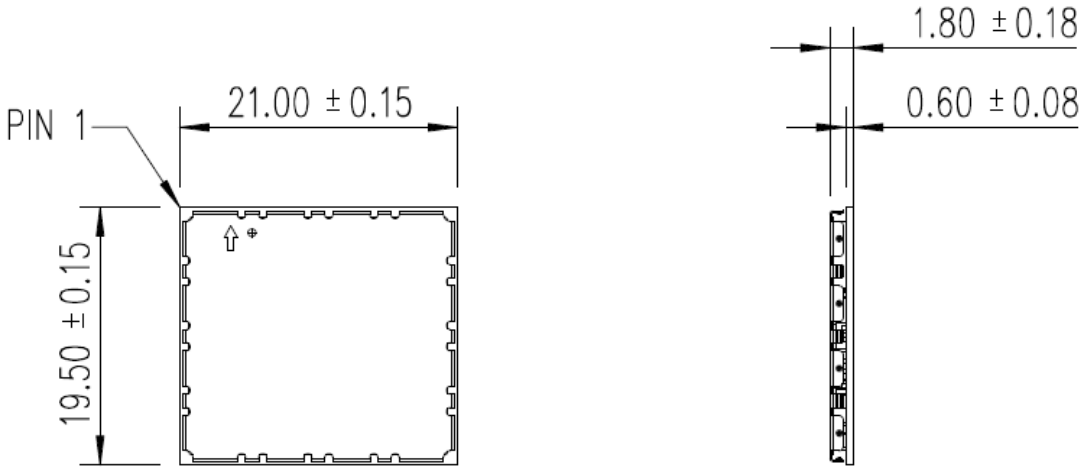

Figure 34. Module Physical Dimensions

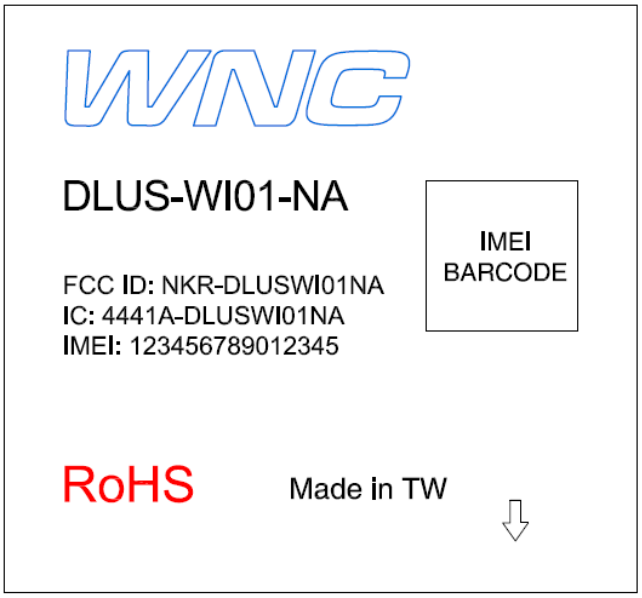

Figure 35. NA Module Laser Marking

Notes on Figure 35 (on page 55):

1. The triangle in the bottom-right corner provides pin #1 location.
2. FCC ID: NKR-DLUSWI01NA
3. IC: 4441A-DLUSWI01NA
4. IMEI:*XXXXXXXXXXXXXX*
5. S/N:C2A*YYMMDDNNNNSSS* (16 digits)
   - C2A: reserved, value subject to change at WNC's discretion (3 digits);
   - *YYMMDD*: Manufacturing Date (YY:Year;MM:Month,DD:Day);
   - *NNNN*: Panel counter (from 0001~9999);
   - *SSS*: Piece location on panel (from 001~036)

TBD

Figure 36. JP Module Laser Marking

Notes on Figure 36 (on page 55):

TBD

Figure 37. EU Module Laser Marking

Notes on Figure 37 (on page 56):

6.2. Environmental Conditions

DLUS-WI01-NA operating conditions:

- Temperature (PCB temperature as measured by on-board thermistor):
  - Operational: -40°C to +85°C;
  - RF compliant: -30°C to +85°C
- Humidity: 10% to 85% (non-condensing)

6.3. Packing

W	44.00±0.30	P2	2.00±0.15
S0	40.40±0.10	A0	19.86±0.15
E1	1.75±0.10	A1	——
F	20.20±0.15	B0	21.36±0.15
D0	1.50 $^{+0.10}_{-0.00}$	B1	——
D1	0.00 $^{+0.10}_{-0.00}$	K0	2.3±0.15
P1	24.00±0.10	K1	——
P0	4.00±0.10	T	0.40±0.05

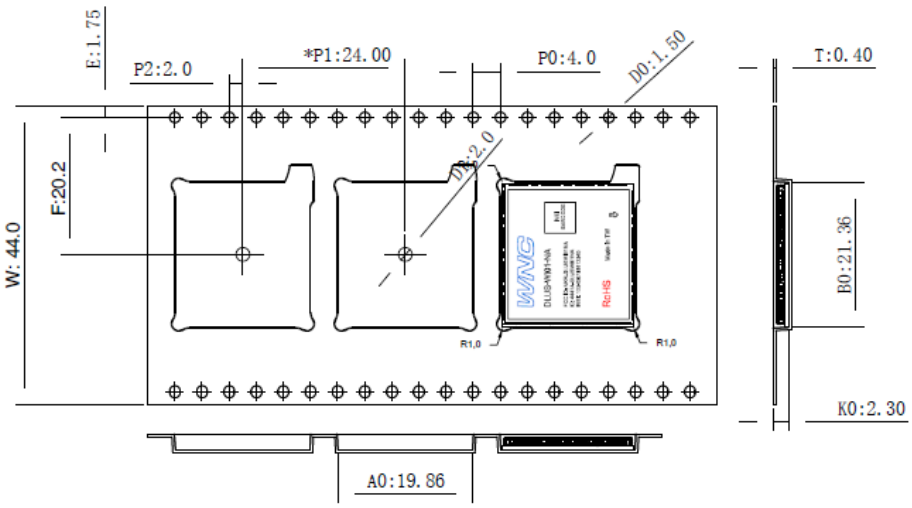

NOTES:
1. CAMBER IN COMPLIANCE WITH EIA 481.
2. MATERIAL: PS BLACK
3. SURFACE RESISTANCE: 1x10^4 ≦N<1.0X10^11 Ω ,MEASUREMENT METHOD PER ESD STD11.11 OR STM11.12 OR STM11.13
4. PACKING LENGTH PER ROLL(PLASTIC REEL): ABOUT 21.6 METERS.
5. VENDOR SHIPPING LENGTH PER ROLL : 64.8 METERS.(1:3 Input)
6. COMPONENT POCKETS PER 13" REEL : 800 PCS
(TOTAL POCKETS PER 13" REEL & 7" HUB: 900PCS
EMPTY POCKET IN FRONT OF REEL: 40PCS
EMPTY POCKET IN BACK OF REEL: 50PCS
BUFFER POCKET: 10 PCS)

Figure 38. Packing Modules in Reels

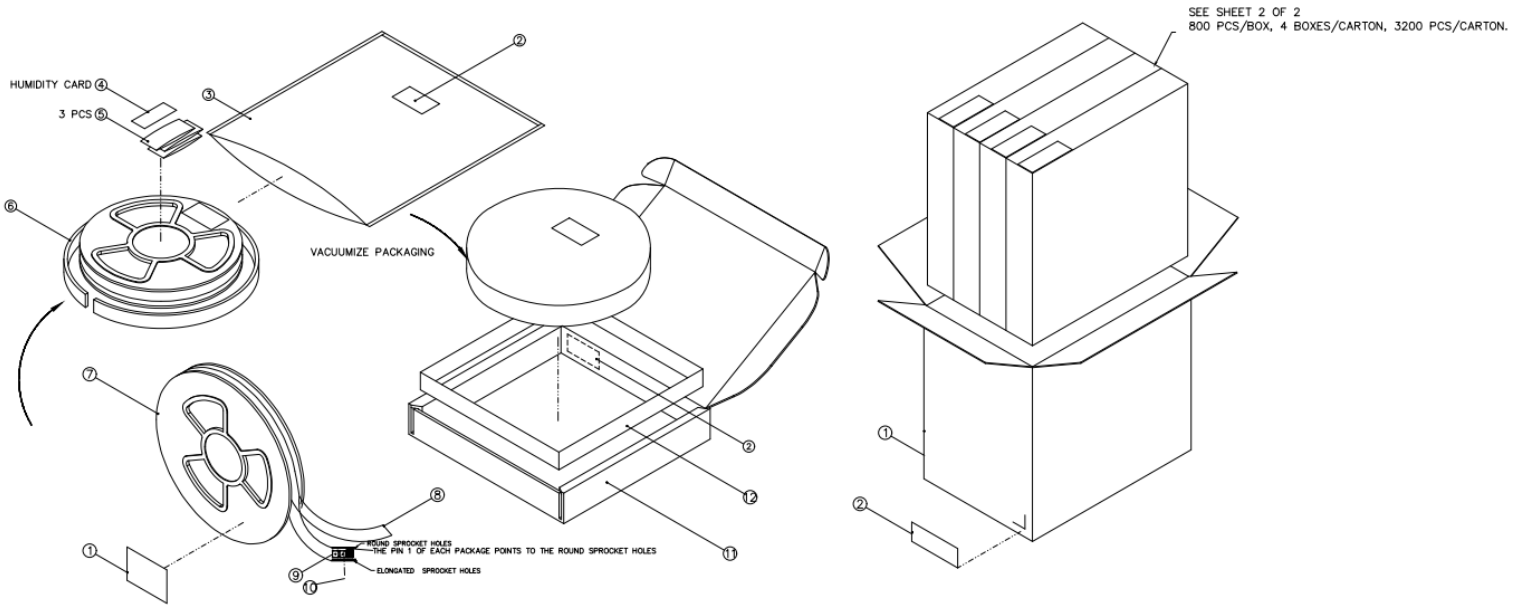

Figure 39. Packing Reels in Boxes