6.4 Powerline Conducted Emissions [Section 15.207 & 15.407 (b)(5)]

6.4.1 EUT Configuration

The EUT was set up on the non-conductive table that is 1.0 by 1.5 meter, 80cm above ground. The wall of the shielded room was located 40cm to the rear of the EUT.

Power to the EUT was provided through the LISN. The impedance vs. frequency characteristic of the LISN is complied with the limit shown on the figure 1 of ANSI C63.4-2001.

Both lines (neutral and hot) were connected to the LISN in series at testing. A coaxial-type connector which provides one 50 ohms terminating impedance was provided for connecting the test instrument. The excess length of the power cord was folded back and forth at the center of the lead so as to form a bundle not exceeding 40cm in length.

Any changes made to the configuration, or modifications made to the EUT, during testing are noted in the following test record.

If the EUT is a Personal Computer or a peripheral of personal computer, and the personal computer has an auxiliary AC outlet which can be used for providing power to an external monitor, then all measurements will be made with the monitor power from first the computer-mounted AC outlet and then a floor-mounted AC outlet.

6.4.2 Test Procedure

The system was set up as described above, with the EMI diagnostic software running. The main power line conducted EMI tests were run on the hot and neutral conductors of the power cord and the results were recorded. The effect of varying the position of the interface cables has been investigated to find the configuration that produces maximum emission.

At the frequencies where the peak values of the emissions were higher than 6dß below the applicable limits, the emissions were also measured with the quasi-peak detectors. At the frequencies where the quasi-peak values of the emissions were higher than 6dß below the applicable average limits, the emissions were also measured with the average detectors.

The highest emissions were analyzed in details by operating the spectrum analyzer in fixed tuned mode to determine the nature of the emissions and to provide information which could be useful in reducing their amplitude.

6.4.3 EMI Receiver/Spectrum Analyzer Configuration (for the frequencies tested)

Frequency Range:	150 KHz--30MHz
Detector Function:	Quasi-Peak/Average
Bandwidth (RBW):	9KHz

6.4.4 Test Data:

Power Line Conducted Emissions (Hot)

Operator: Mailes Hsieh
Temperature (C): 24
03:11:57 PM, Friday, April 23, 2004 Humidity (%): 50

Frequency	LISN Loss	Cable Loss	QP Corrct.	QP Limit	QP Margin	AVE Corrct.	AVE Limit	AVE Margin
MHz	(dB)	(dB)	Amp.(dBuV)	(dBuV)	(dB)	Amp.(dBuV)	(dBuV)	(dB)
0.20655	0.10	0.02	55.63	64.38	-8.75	32.00	54.38	-22.39
0.28743	0.10	0.02	54.78	62.07	-7.29	38.47	52.07	-13.60
0.34665	0.10	0.02	48.59	60.38	-11.79	24.89	50.38	-25.49
0.43013	0.10	0.03	48.65	58.00	-9.35	28.64	48.00	-19.35
0.50223	0.10	0.03	43.58	56.00	-12.42	25.60	46.00	-20.40
1.14352	0.36	0.07	31.79	56.00	-24.21	17.88	46.00	-28.12
1.31049	0.31	0.08	32.31	56.00	-23.69	19.79	46.00	-26.21
1.84237	0.15	0.10	43.35	56.00	-12.65	33.64	46.00	-12.36
2.19731	0.11	0.10	42.66	56.00	-13.34	32.90	46.00	-13.10
2.40789	0.12	0.10	41.85	56.00	-14.15	32.17	46.00	-13.83

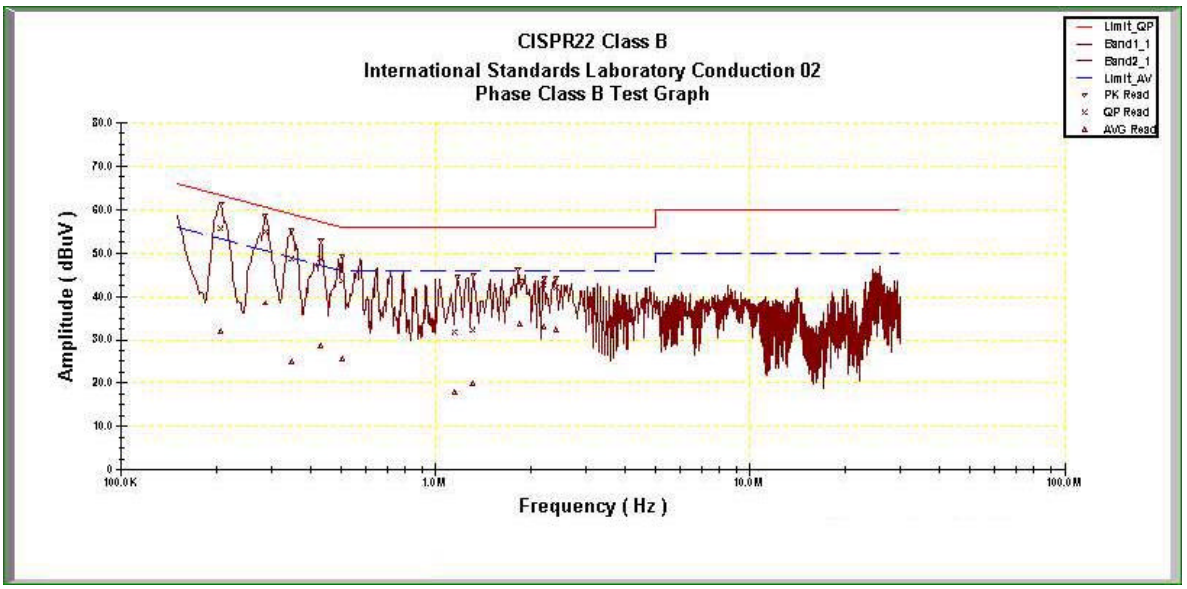

Power Line Conducted Emissions (Neutral)

Operator: Mailes Hsieh
Temperature (C): 24
03:02:40 PM, Friday, April 23, 2004 Humidity (%): 50

Frequency	LISN Loss	Cable Loss	QP Corrct.	QP Limit	QP Margin	AVE Corrct.	AVE Limit	AVE Margin
MHz	(dB)	(dB)	Amp.(dBuV)	(dBuV)	(dB)	Amp.(dBuV)	(dBuV)	(dB)
0.20638	0.10	0.02	55.60	64.39	-8.79	33.35	54.39	-21.04
0.28728	0.10	0.02	54.38	62.08	-7.70	36.15	52.08	-15.93
0.34885	0.10	0.02	49.22	60.32	-11.10	25.61	50.32	-24.71
0.4299	0.10	0.03	48.15	58.00	-9.86	26.35	48.00	-21.66
0.50163	0.10	0.03	45.86	56.00	-10.14	24.12	46.00	-21.88
1.34831	0.23	0.08	33.74	56.00	-22.26	27.05	46.00	-18.95
25.0392	0.70	0.32	40.64	60.00	-19.36	30.96	50.00	-19.04
25.2491	0.70	0.32	40.69	60.00	-19.31	32.07	50.00	-17.93
25.3944	0.70	0.32	40.14	60.00	-19.86	30.18	50.00	-19.82
25.4554	0.70	0.32	39.85	60.00	-20.15	31.85	50.00	-18.15

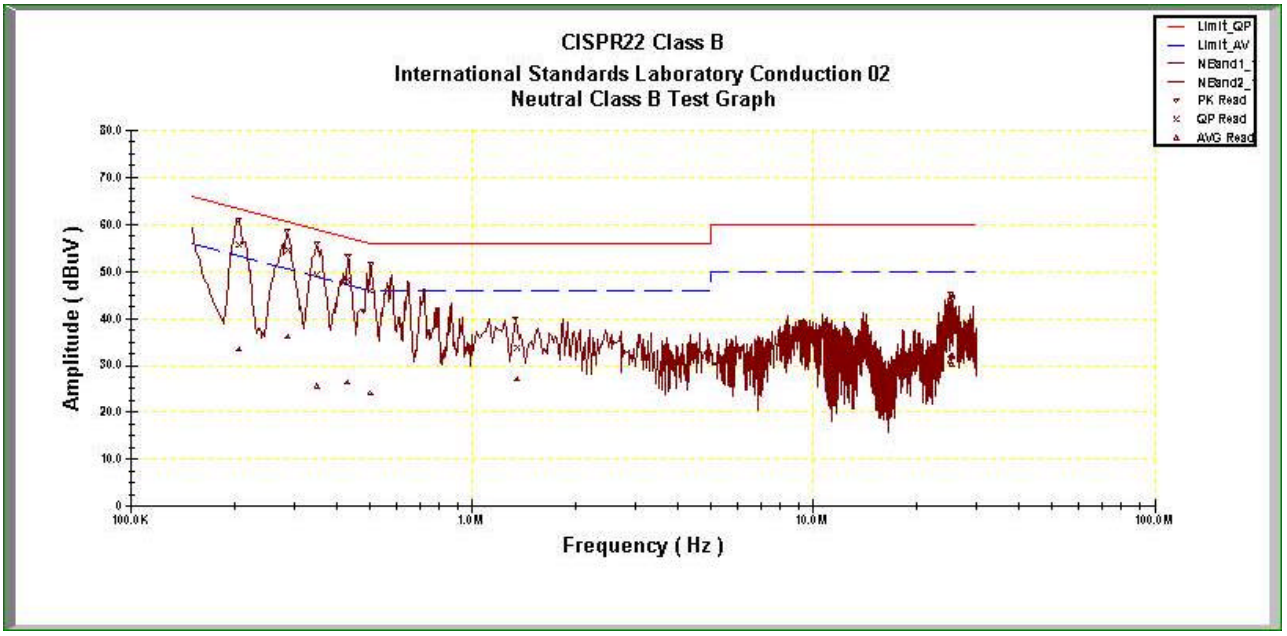

* NOTE: During the test, the EMI receiver was set to Max. Hold then switch the EUT between Main antenna , Aux antenna Channel 1 , 4, 5, 8 ,9,12 of Normal
Mode and Channel 1, 2, 3,4,5 of Turbo Mode to get the maximum reading of all these channels.
Margin = Amplitude + Insertion Loss- Limit
A margin of -8dB means that the emission is 8dB below the limit

6.5 Radiated Emission Measurement [Section 15.209 & 15.407(b)(5)]

6.5.1 EUT Configuration

The equipment under test was set up on the 10 meter chamber with measurement distance of 3 meters. The EUT was placed on a non-conductive table 80cm above ground.

Any changes made to the configuration, or modifications made to the EUT, during testing are noted in the following test record.

6.5.2 Test Procedure

The system was set up as described above, with the EMI diagnostic software running. We found the maximum readings by varying the height of antenna and then rotating the turntable. Both polarization of antenna, horizontal and vertical, are measured.

30M to 1GHz: The highest emissions between 30 MHz to 1000 MHz were also analyzed in details by operating the spectrum analyzer and/or EMI receiver in quasi-peak mode to determine the precise amplitude of the emissions. While doing so, the interconnecting cables and major parts of the system were moved around, the antenna height was varied between one and four meters, its polarization was varied between vertical and horizontal, and the turntable was slowly rotated, to maximize the emission.

1GHz – 40GHz: The highest emissions were also analyzed in details by operating the spectrum analyzer and/or EMI receiver in peak mode to determine the precise amplitude of the emission. While doing so, the interconnecting cables and major parts of the system were moved around, the antenna height was varied between one and four meters, its polarization was varied between vertical and horizontal, and the turntable was slowly rotated, to maximize the emission. During test the EMI receiver and spectrum was setup according to para. 6.5.3.

For the test of 2nd to 10th harmonics frequencies , the equipment setup was also refer to para.6.5.3. The frequencies were tested using Peak mode first, if the test data is higher than the emissions limit, an additional measurement using Average mode will be performed and the average reading will be compared to the limit and record in test report.

6.5.3 EMI Receiver/Spectrum Analyzer Configuration

Frequency Range Tested:	30MHz~1000MHz
Detector Function:	Quasi-Peak Mode
Resolution Bandwidth (RBW):	120KHz
Video Bandwidth (VBW)	1MHz
Frequency Range Tested:	1GHz – 40 GHz
Detector Function:	Peak Mode
Resolution Bandwidth (RBW):	1MHz
Video Bandwidth (VBW)	1MHz
Frequency Range Tested:	30MHz – 40 GHz
Detector Function:	Average Mode
Resolution Bandwidth (RBW):	1MHz
Video Bandwidth (VBW)	10 Hz

6.5.4 Test Data (30MHz – 1GHz) .

30M – 1GHz Open Field Radiated Emissions (Horizontal)

Operator: Mailes Hsieh
Temperature (C): 23
08:12:52 PM, Friday, April 23, 2004 Humidity (%): 41

Frequency	Rx Amp.	Ant Fact	CableLoss	PreAmpGain	Corrct. Emi.	Limit	Margin	Ant. Pos.	Table Pos.
MHz	(dBuV)	(dB/m)	(dB)	(dB)	(dBuV/m)	(dBuV/m)	(dB)	(cm)	(deg)
249.22	20.43	11.49	4.73	0.00	36.65	46.00	-9.35	200.00	283.00
299.66	11.72	13.59	4.65	0.00	29.96	46.00	-16.04	200.00	261.00
313.24	10.91	13.79	4.69	0.00	29.39	46.00	-16.61	100.00	299.00
350.1	9.31	14.30	4.97	0.00	28.59	46.00	-17.41	250.00	267.00
395.69	11.29	15.85	5.29	0.00	32.43	46.00	-13.57	200.00	153.00
499.48	6.47	17.69	6.05	0.00	30.20	46.00	-15.80	100.00	283.00
648.86	1.76	19.10	7.03	0.00	27.89	46.00	-18.11	100.00	269.00
791.45	6.03	20.02	7.83	0.00	33.88	46.00	-12.12	200.00	316.00
890.39	2.27	20.44	8.30	0.00	31.01	46.00	-14.99	200.00	234.00
949.56	3.27	21.19	8.59	0.00	33.05	46.00	-12.95	100.00	250.00

30M – 1GHz Open Field Radiated Emissions (Vertical)

Operator: Mailes Hsieh
Temperature (C): 23
08:19:05 PM, Friday, April 23, 2004 Humidity (%): 41

Frequency	Rx Amp.	Ant Fact	CableLoss	PreAmpGain	Corrct. Emi.	Limit	Margin	Ant. Pos.	Table Pos.
MHz	(dBuV)	(dB/m)	(dB)	(dB)	(dBuV/m)	(dBuV/m)	(dB)	(cm)	(deg)
43.58	15.34	10.42	1.81	0.00	27.58	40.00	-12.42	200.00	332.00
47.46	17.23	8.62	1.89	0.00	27.73	40.00	-12.27	150.00	99.00
56.19	18.48	6.36	2.20	0.00	27.03	40.00	-12.97	250.00	209.00
58.13	18.48	5.97	2.24	0.00	26.69	40.00	-13.31	200.00	190.00
63.95	18.19	5.60	2.41	0.00	26.19	40.00	-13.81	150.00	90.00
98.87	18.91	10.07	3.00	0.00	31.98	43.50	-11.52	100.00	192.00
249.22	21.95	11.49	4.73	0.00	38.17	46.00	-7.83	200.00	176.00
499.48	8.19	17.69	6.05	0.00	31.92	46.00	-14.08	200.00	293.00
791.45	5.20	20.02	7.83	0.00	33.04	46.00	-12.96	100.00	107.00
824.43	5.02	20.29	7.94	0.00	33.26	46.00	-12.74	200.00	123.00

* NOTE: During the pre-test, the EUT has been tested for Channel 1, 4, 5, 8, 9, 12 of Normal Mode and Channel 1, 2, 3, 4, 5 of Turbo mode and transmit from Main and Aux antenna respectively to get all the critical emission frequencies. In the final test all the critical emission frequencies has been tested and the test data are listed above.

Margin=Corrected Amplitude–Limit
Corrected Amplitude = Radiated Amplitude + Antenna Correction Factor + Cable Loss - Pre-Amplifier Gain
A margin of -8dB means that the emission is 8dB below the limit

All frequencies from 30MHz to 1GHz have been tested

6.5.5 Test Data (1GHz – 40 GHz, Transmitting) .

1GHz~ 40 GHz (Horizontal), Normal Mode, Channel 1 : 5180 MHz

Operator: Mailes Hsieh

RBW: 1 MHz
Humidity (%): 39
Temperature (C): 22

Frequency	Rx_R.	Ant_F.	Cab_L.	PreAmpl	Emission	Limit	Margin	A.Tower	T.Table
MHz	dBuV	dB/m	dB	dB	dBuV/m	dBuV/m	dB	cm	deg
3449.15	23.79	31.46	2.15	46.64	10.75	54.00	-43.25	100	358
4283.52	21.58	33.05	1.75	46.39	9.99	54.00	-44.01	103	209
8185.61	25.08	41.01	3.16	43.27	25.97	54.00	-28.03	100	157
11646.2	38.07	41.17	3.43	41.93	40.75	54.00	-13.25	101	75
12419.6	38.04	41.80	3.80	42.90	40.74	54.00	-13.26	100	327
15792.3	32.57	43.74	5.75	41.82	40.24	54.00	-13.76	100	88

1GHz~ 40 GHz (Vertical), Normal Mode, Channel 1: 5180 MHz

Operator: Mailes Hsieh

RBW: 1 MHz
Humidity (%): 39
Temperature (C): 22

Frequency	Rx_R.	Ant_F.	Cab_L.	PreAmpl	Emission	Limit	Margin	A.Tower	T.Table
MHz	dBuV	dB/m	dB	dB	dBuV/m	dBuV/m	dB	cm	deg
3794.41	21.62	31.91	2.13	46.33	9.33	54.00	-44.67	100	122
4582.02	20.42	34.01	1.39	46.67	9.15	54.00	-44.85	100	144
7822.38	25.13	40.35	3.13	44.58	24.04	54.00	-29.96	102	157
8171.23	25.25	40.98	3.15	43.31	26.06	54.00	-27.94	102	122
10902.1	38.27	39.48	3.34	40.57	40.52	54.00	-13.48	100	198
15758.0	32.41	43.63	5.70	41.93	39.80	54.00	-14.20	100	209

Note: " * ": Fundamental Frequency
" pk": peak reading
"av": average reading
The Spectrum noise level+Correction Factor<Limit-6 dB
Margin = Corrected Amplitude – Limit
Corrected Amplitude=Radiated Amplitude+Antenna Correction Factor+Cable Loss-Pre-Amplifier Gain
A margin of -8dB means that the emission is 8dB below the limit.

All frequencies from 1GHz to 40 GHz have been tested.

1GHz~ 40 GHz (Horizontal), Normal Mode, Channel 4: 5240 MHz

Operator: Mailes Hsieh

RBW: 1 MHz
Humidity (%): 39
Temperature (C): 22

Frequency	Rx_R.	Ant_F.	Cab_L.	PreAmpl	Emission	Limit	Margin	A.Tower	T.Table
MHz	dBuV	dB/m	dB	dB	dBuV/m	dBuV/m	dB	cm	deg
3488.71	24.58	31.49	2.09	46.65	11.51	54.00	-42.49	102	112
4103.70	21.77	32.51	2.02	46.21	10.08	54.00	-43.92	102	198
7825.97	25.16	40.36	3.13	44.56	24.09	54.00	-29.91	100	101
8038.16	25.52	40.68	3.06	43.65	25.61	54.00	-28.39	101	75
11704.9	37.63	41.36	3.47	42.06	40.40	54.00	-13.60	100	130
15767.8	34.87	43.66	5.72	41.90	42.34	54.00	-11.66	100	157

1GHz~ 40 GHz (Vertical), Normal Mode, Channel 4: 5240 MHz

Operator: Mailes Hsieh

RBW: 1 MHz
Humidity (%): 39
Temperature (C): 22

Frequency	Rx_R.	Ant_F.	Cab_L.	PreAmpl	Emission	Limit	Margin	A.Tower	T.Table
MHz	dBuV	dB/m	dB	dB	dBuV/m	dBuV/m	dB	cm	deg
4067.73	20.82	32.40	2.07	46.18	9.12	54.00	-44.88	100	267
4546.05	21.09	33.88	1.41	46.64	9.73	54.00	-44.27	104	209
8189.21	24.55	41.02	3.16	43.27	25.46	54.00	-28.54	100	358
10985.3	38.73	39.50	3.35	40.52	41.05	54.00	-12.95	100	77
11846.9	38.18	41.81	3.55	42.39	41.15	54.00	-12.85	102	153
15821.7	34.52	43.83	5.79	41.72	42.42	54.00	-11.58	100	75

Note: " * ": Fundamental Frequency
" pk": peak reading
"av": average reading
The Spectrum noise level+Correction Factor<Limit-6 dB
Margin = Corrected Amplitude – Limit
Corrected Amplitude=Radiated Amplitude+Antenna Correction Factor+Cable Loss-Pre-Amplifier Gain
A margin of -8dB means that the emission is 8dB below the limit.

All frequencies from 1GHz to 40 GHz have been tested.

1GHz~ 40 GHz (Horizontal), Normal Mode, Channel 5 : 5260 MHz

Operator: Mailes Hsieh

RBW: 1 MHz
Humidity (%): 39
Temperature (C): 22

Frequency	Rx_R.	Ant_F.	Cab_L.	PreAmpl	Emission	Limit	Margin	A.Tower	T.Table
MHz	dBuV	dB/m	dB	dB	dBuV/m	dBuV/m	dB	cm	deg
3503.10	23.65	31.50	2.07	46.65	10.58	54.00	-43.42	100	37
4146.85	20.75	32.64	1.95	46.25	9.09	54.00	-44.91	101	122
4564.04	21.88	33.94	1.40	46.66	10.56	54.00	-43.44	100	103
7415.98	24.88	39.77	3.27	46.13	21.79	54.00	-32.21	100	209
10510.5	42.59	39.40	3.32	40.82	44.50	54.00	-9.50	106	106
15777.6	35.84	43.69	5.73	41.87	43.39	54.00	-10.61	100	157

1GHz~ 40 GHz (Vertical), Normal Mode, Channel 5 : 5260 MHz

Operator: Mailes Hsieh

RBW: 1 MHz
Humidity (%): 39
Temperature (C): 22

Frequency	Rx_R.	Ant_F.	Cab_L.	PreAmpl	Emission	Limit	Margin	A.Tower	T.Table
MHz	dBuV	dB/m	dB	dB	dBuV/m	dBuV/m	dB	cm	deg
3823.18	21.51	31.95	2.13	46.30	9.29	54.00	-44.71	100	122
4207.99	20.76	32.82	1.86	46.31	9.13	54.00	-44.87	103	358
4567.63	21.57	33.96	1.40	46.66	10.27	54.00	-43.73	100	313
7815.19	25.07	40.34	3.14	44.61	23.93	54.00	-30.07	101	157
10515.4	42.06	39.40	3.32	40.82	43.97	54.00	-10.03	100	156
15772.7	35.42	43.67	5.72	41.88	42.93	54.00	-11.07	102	97

Note: " * ": Fundamental Frequency
" pk": peak reading
"av": average reading
The Spectrum noise level+Correction Factor<Limit-6 dB
Margin = Corrected Amplitude – Limit
Corrected Amplitude=Radiated Amplitude+Antenna Correction Factor+Cable Loss-Pre-Amplifier Gain
A margin of -8dB means that the emission is 8dB below the limit.

All frequencies from 1GHz to 40 GHz have been tested.

1GHz~ 40 GHz (Horizontal), Normal Mode, Channel 8: 5320 MHz

Operator: Mailes Hsieh

RBW: 1 MHz
Humidity (%): 39
Temperature (C): 22

Frequency	Rx_R.	Ant_F.	Cab_L.	PreAmpl	Emission	Limit	Margin	A.Tower	T.Table
MHz	dBuV	dB/m	dB	dB	dBuV/m	dBuV/m	dB	cm	deg
3542.66	25.26	31.56	2.08	46.60	12.29	54.00	-41.71	100	157
3967.03	20.88	32.15	2.16	46.15	9.05	54.00	-44.95	103	75
4574.83	21.66	33.98	1.39	46.67	10.37	54.00	-43.63	100	132
7977.02	25.46	40.57	3.04	43.86	25.21	54.00	-28.79	100	358
10637.8	43.54	39.43	3.33	40.74	45.56	54.00	-8.44	101	209
15958.7	37.28	44.27	5.99	41.27	46.27	54.00	-7.73	100	157

1GHz~ 40 GHz (Vertical), Normal Mode, Channel 8: 5320 MHz

Operator: Mailes Hsieh

RBW: 1 MHz
Humidity (%): 39
Temperature (C): 22

Frequency	Rx_R.	Ant_F.	Cab_L.	PreAmpl	Emission	Limit	Margin	A.Tower	T.Table
MHz	dBuV	dB/m	dB	dB	dBuV/m	dBuV/m	dB	cm	deg
4366.23	21.62	33.30	1.63	46.47	10.07	54.00	-43.93	100	107
4466.93	21.04	33.60	1.48	46.57	9.55	54.00	-44.45	102	154
4542.46	21.56	33.86	1.41	46.64	10.20	54.00	-43.80	100	308
7649.75	25.83	40.11	3.23	45.39	23.78	54.00	-30.22	104	168
10637.8	43.41	39.43	3.33	40.74	45.43	54.00	-8.57	100	149
15958.7	30.50	44.27	5.99	41.27	39.49	54.00	-14.51	100	72

Note: " * ": Fundamental Frequency
" pk": peak reading
"av": average reading
The Spectrum noise level+Correction Factor<Limit-6 dB
Margin = Corrected Amplitude – Limit
Corrected Amplitude=Radiated Amplitude+Antenna Correction Factor+Cable Loss-Pre-Amplifier Gain
A margin of -8dB means that the emission is 8dB below the limit.

All frequencies from 1GHz to 40 GHz have been tested.

1GHz~ 40 GHz (Horizontal), Normal Mode, Channel 9: 5745 MHz

Operator: Mailes Hsieh

RBW: 1 MHz
Humidity (%): 39
Temperature (C): 22

Frequency	Rx_R.	Ant_F.	Cab_L.	PreAmpl	Emission	Limit	Margin	A.Tower	T.Table
MHz	dBuV	dB/m	dB	dB	dBuV/m	dBuV/m	dB	cm	deg
3826.77	24.50	31.96	2.14	46.30	12.30	54.00	-41.70	102	325
4398.60	21.71	33.40	1.58	46.50	10.19	54.00	-43.81	100	53
4506.49	21.13	33.72	1.43	46.61	9.68	54.00	-44.32	104	168
7937.46	25.12	40.51	3.07	44.04	24.66	54.00	-29.34	101	153
11479.7	46.42	40.65	3.35	41.55	48.88	54.00	-5.12	100	72
17216.8	37.91	46.65	6.31	42.09	48.78	54.00	-5.22	100	149

1GHz~ 40 GHz (Vertical), Normal Mode, Channel 9: 5745 MHz

Operator: Mailes Hsieh

RBW: 1 MHz
Humidity (%): 39
Temperature (C): 22

Frequency	Rx_R.	Ant_F.	Cab_L.	PreAmpl	Emission	Limit	Margin	A.Tower	T.Table
MHz	dBuV	dB/m	dB	dB	dBuV/m	dBuV/m	dB	cm	deg
3708.09	21.67	31.79	2.11	46.43	9.15	54.00	-44.85	100	308
4157.64	21.41	32.67	1.94	46.26	9.76	54.00	-44.24	100	72
4582.02	21.13	34.01	1.39	46.67	9.86	54.00	-44.14	104	168
7804.40	25.48	40.33	3.14	44.67	24.28	54.00	-29.72	100	91
11484.6	48.09	40.66	3.35	41.56	50.55	54.00	-3.45	101	153
17216.8	35.94	46.65	6.31	42.09	46.81	54.00	-7.19	100	122

Note: " * ": Fundamental Frequency
" pk": peak reading
"av": average reading
The Spectrum noise level+Correction Factor<Limit-6 dB
Margin = Corrected Amplitude – Limit
Corrected Amplitude=Radiated Amplitude+Antenna Correction Factor+Cable Loss-Pre-Amplifier Gain
A margin of -8dB means that the emission is 8dB below the limit.

All frequencies from 1GHz to 40 GHz have been tested.

1GHz~ 40 GHz (Horizontal), Normal Mode, Channel 12 : 5805 MHz

Operator: Mailes Hsieh

RBW: 1 MHz
Humidity (%): 39
Temperature (C): 22

Frequency	Rx_R.	Ant_F.	Cab_L.	PreAmpl	Emission	Limit	Margin	A.Tower	T.Table
MHz	dBuV	dB/m	dB	dB	dBuV/m	dBuV/m	dB	cm	deg
3452.75	21.71	31.46	2.14	46.64	8.67	54.00	-45.33	100	110
3866.33	23.13	32.01	2.14	46.25	11.03	54.00	-42.97	100	149
4434.57	21.38	33.50	1.53	46.54	9.88	54.00	-44.12	101	153
7671.33	25.60	40.14	3.22	45.29	23.67	54.00	-30.33	101	176
11597.2	44.72	41.01	3.41	41.81	47.32	54.00	-6.68	100	72
17407.7	38.95	47.22	6.28	42.16	50.29	54.00	-3.71	100	308

1GHz~ 40 GHz (Vertical), Normal Mode, Channel 12 : 5805 MHz

Operator: Mailes Hsieh

RBW: 1 MHz
Humidity (%): 39
Temperature (C): 22

Frequency	Rx_R.	Ant_F.	Cab_L.	PreAmpl	Emission	Limit	Margin	A.Tower	T.Table
MHz	dBuV	dB/m	dB	dB	dBuV/m	dBuV/m	dB	cm	deg
3963.44	21.06	32.15	2.16	46.15	9.22	54.00	-44.78	100	23
4312.29	20.87	33.14	1.71	46.42	9.30	54.00	-44.70	101	168
4542.46	21.34	33.86	1.41	46.64	9.98	54.00	-44.02	100	149
7829.57	25.34	40.36	3.13	44.55	24.29	54.00	-29.71	100	107
11602.1	47.66	41.03	3.41	41.82	50.28	54.00	-3.72	101	153
17402.8	34.54	47.21	6.28	42.16	45.86	54.00	-8.14	100	112

Note: " * ": Fundamental Frequency
" pk": peak reading
"av": average reading
The Spectrum noise level+Correction Factor<Limit-6 dB
Margin = Corrected Amplitude – Limit
Corrected Amplitude=Radiated Amplitude+Antenna Correction Factor+Cable Loss-Pre-Amplifier Gain
A margin of -8dB means that the emission is 8dB below the limit.

All frequencies from 1GHz to 40 GHz have been tested.

1GHz~ 40 GHz (Horizontal), Turbo Mode, Channel 1: 5210 MHz

Operator: Mailes Hsieh

RBW: 1 MHz
Humidity (%): 39
Temperature (C): 22

Frequency	Rx_R.	Ant_F.	Cab_L.	PreAmpl	Emission	Limit	Margin	A.Tower	T.Table
MHz	dBuV	dB/m	dB	dB	dBuV/m	dBuV/m	dB	cm	deg
2902.50	18.05	31.06	2.82	46.51	5.43	54.00	-48.57	105	188
3470.73	23.60	31.48	2.11	46.65	10.55	54.00	-43.45	100	344
4592.81	21.09	34.05	1.39	46.68	9.84	54.00	-44.16	102	334
7915.88	25.68	40.48	3.08	44.14	25.10	54.00	-28.90	103	24
10877.6	37.47	39.48	3.34	40.59	39.70	54.00	-14.30	101	153
16149.6	36.53	44.46	6.12	41.45	45.66	54.00	-8.34	100	308

1GHz~ 40 GHz (Vertical), Turbo Mode, Channel 1: 5210 MHz

Operator: Mailes Hsieh

RBW: 1 MHz
Humidity (%): 39
Temperature (C): 22

Frequency	Rx_R.	Ant_F.	Cab_L.	PreAmpl	Emission	Limit	Margin	A.Tower	T.Table
MHz	dBuV	dB/m	dB	dB	dBuV/m	dBuV/m	dB	cm	deg
3830.37	21.17	31.96	2.14	46.29	8.98	54.00	-45.02	100	149
4078.52	20.65	32.44	2.05	46.19	8.95	54.00	-45.05	100	308
4333.87	21.26	33.20	1.68	46.44	9.70	54.00	-44.30	100	107
7829.57	26.19	40.36	3.13	44.55	25.13	54.00	-28.87	101	168
10172.7	38.47	39.66	3.14	41.03	40.24	54.00	-13.76	100	72
15904.9	36.75	44.10	5.91	41.45	45.31	54.00	-8.69	102	325

Note: " * ": Fundamental Frequency
" pk": peak reading
"av": average reading
The Spectrum noise level+Correction Factor<Limit-6 dB
Margin = Corrected Amplitude – Limit
Corrected Amplitude=Radiated Amplitude+Antenna Correction Factor+Cable Loss-Pre-Amplifier Gain
A margin of -8dB means that the emission is 8dB below the limit.

All frequencies from 1GHz to 40 GHz have been tested.

1GHz~ 40 GHz (Horizontal) , Turbo Mode, Channel 2 : 5250 MHZ

Operator: Mailes Hsieh

RBW: 1 MHz
Humidity (%): 39
Temperature (C): 22

Frequency	Rx_R.	Ant_F.	Cab_L.	PreAmpl	Emission	Limit	Margin	A.Tower	T.Table
MHz	dBuV	dB/m	dB	dB	dBuV/m	dBuV/m	dB	cm	deg
3495.90	24.37	31.50	2.08	46.65	11.29	54.00	-42.71	100	149
3931.07	20.91	32.10	2.16	46.18	8.98	54.00	-45.02	101	153
4571.23	20.88	33.97	1.40	46.66	9.58	54.00	-44.42	100	72
7912.29	26.01	40.48	3.08	44.16	25.41	54.00	-28.59	103	168
10823.8	37.88	39.46	3.34	40.62	40.07	54.00	-13.93	100	308
16414.0	36.16	44.57	6.25	42.02	44.95	54.00	-9.05	100	102

1GHz~ 40 GHz (Vertical), Turbo Mode, Channel 2: 5250 MHz

Operator: Mailes Hsieh

RBW: 1 MHz
Humidity (%): 39
Temperature (C): 22

Frequency	Rx_R.	Ant_F.	Cab_L.	PreAmpl	Emission	Limit	Margin	A.Tower	T.Table
MHz	dBuV	dB/m	dB	dB	dBuV/m	dBuV/m	dB	cm	deg
3726.07	21.24	31.82	2.12	46.41	8.77	54.00	-45.23	100	107
4020.98	20.69	32.26	2.14	46.13	8.96	54.00	-45.04	100	311
4315.88	21.42	33.15	1.70	46.42	9.85	54.00	-44.15	102	325
7959.04	25.53	40.54	3.05	43.94	25.19	54.00	-28.81	100	149
10843.4	37.89	39.47	3.34	40.61	40.09	54.00	-13.91	105	168
15855.9	36.58	43.94	5.84	41.61	44.75	54.00	-9.25	100	329

Note: " * ": Fundamental Frequency
" pk": peak reading
"av": average reading
The Spectrum noise level+Correction Factor<Limit-6 dB
Margin = Corrected Amplitude – Limit
Corrected Amplitude=Radiated Amplitude+Antenna Correction Factor+Cable Loss-Pre-Amplifier Gain
A margin of -8dB means that the emission is 8dB below the limit.

All frequencies from 1GHz to 40 GHz have been tested.

1GHz~ 40 GHz (Horizontal), Turbo Mode, Channel 3 : 5290 MHz

Operator: Mailes Hsieh

RBW: 1 MHz
Humidity (%): 39
Temperature (C): 22

Frequency	Rx_R.	Ant_F.	Cab_L.	PreAmpl	Emission	Limit	Margin	A.Tower	T.Table
MHz	dBuV	dB/m	dB	dB	dBuV/m	dBuV/m	dB	cm	deg
3524.68	24.24	31.53	2.07	46.62	11.23	54.00	-42.77	101	198
4369.83	21.75	33.31	1.62	46.47	10.21	54.00	-43.79	102	325
4564.04	21.33	33.94	1.40	46.66	10.01	54.00	-43.99	100	107
8002.20	25.70	40.60	3.03	43.74	25.60	54.00	-28.40	100	308
10574.1	42.70	39.41	3.32	40.78	44.66	54.00	-9.34	100	72
15875.5	39.11	44.00	5.87	41.54	47.44	54.00	-6.56	100	149

1GHz~ 40 GHz (Vertical) , Turbo Mode, Channel 3: 5290 MHz

Operator: Mailes Hsieh

RBW: 1 MHz
Humidity (%): 39
Temperature (C): 22

Frequency	Rx_R.	Ant_F.	Cab_L.	PreAmpl	Emission	Limit	Margin	A.Tower	T.Table
MHz	dBuV	dB/m	dB	dB	dBuV/m	dBuV/m	dB	cm	deg
3941.86	21.25	32.12	2.16	46.17	9.35	54.00	-44.65	100	157
4319.48	21.27	33.16	1.70	46.42	9.70	54.00	-44.30	101	142
4564.04	20.60	33.94	1.40	46.66	9.29	54.00	-44.71	100	358
7761.24	25.96	40.27	3.17	44.87	24.53	54.00	-29.47	102	112
10579.0	43.27	39.42	3.32	40.78	45.23	54.00	-8.77	100	75
15875.5	33.52	44.00	5.87	41.54	41.85	54.00	-12.15	100	230

Note: " * ": Fundamental Frequency
" pk": peak reading
"av": average reading
The Spectrum noise level+Correction Factor<Limit-6 dB
Margin = Corrected Amplitude – Limit
Corrected Amplitude=Radiated Amplitude+Antenna Correction Factor+Cable Loss-Pre-Amplifier Gain
A margin of -8dB means that the emission is 8dB below the limit.

All frequencies from 1GHz to 40 GHz have been tested.

1GHz~ 40 GHz (Horizontal), Turbo Mode, Channel 4 : 5760 MHz

Operator: Mailes Hsieh

RBW: 1 MHz
Humidity (%): 39
Temperature (C): 22

Frequency	Rx_R.	Ant_F.	Cab_L.	PreAmpl	Emission	Limit	Margin	A.Tower	T.Table
MHz	dBuV	dB/m	dB	dB	dBuV/m	dBuV/m	dB	cm	deg
3837.56	24.85	31.97	2.14	46.29	12.68	54.00	-41.32	100	75
4168.43	20.82	32.71	1.92	46.28	9.17	54.00	-44.83	100	246
4596.40	20.99	34.07	1.38	46.68	9.76	54.00	-44.24	100	122
7757.64	26.88	40.26	3.17	44.88	25.42	54.00	-28.58	103	358
11514.0	43.78	40.74	3.36	41.62	46.26	54.00	-7.74	100	122
17544.8	34.05	47.69	6.18	42.04	45.89	54.00	-8.11	100	67

1GHz~ 40 GHz (Vertical) , Turbo Mode, Channel 4: 5760 MHz

Operator: Mailes Hsieh

RBW: 1 MHz
Humidity (%): 39
Temperature (C): 22

Frequency	Rx_R.	Ant_F.	Cab_L.	PreAmpl	Emission	Limit	Margin	A.Tower	T.Table
MHz	dBuV	dB/m	dB	dB	dBuV/m	dBuV/m	dB	cm	deg
4003.00	21.16	32.21	2.17	46.11	9.43	54.00	-44.57	100	209
4315.88	21.06	33.15	1.70	46.42	9.49	54.00	-44.51	100	157
4592.81	20.63	34.05	1.39	46.68	9.38	54.00	-44.62	102	122
7362.04	24.94	39.68	3.23	46.15	21.70	54.00	-32.30	100	145
11518.9	46.72	40.76	3.36	41.63	49.21	54.00	-4.79	101	311
17603.5	34.83	47.93	6.08	41.83	47.01	54.00	-6.99	102	132

Note: " * ": Fundamental Frequency
" pk": peak reading
"av": average reading
The Spectrum noise level+Correction Factor<Limit-6 dB
Margin = Corrected Amplitude – Limit
Corrected Amplitude=Radiated Amplitude+Antenna Correction Factor+Cable Loss-Pre-Amplifier Gain
A margin of -8dB means that the emission is 8dB below the limit.

All frequencies from 1GHz to 40 GHz have been tested.

1GHz~ 40 GHz (Horizontal) , Turbo Mode, Channel 5 : 5800 MHZ

Operator: Mailes Hsieh

RBW: 1 MHz
Humidity (%): 39
Temperature (C): 22

Frequency	Rx_R.	Ant_F.	Cab_L.	PreAmpl	Emission	Limit	Margin	A.Tower	T.Table
MHz	dBuV	dB/m	dB	dB	dBuV/m	dBuV/m	dB	cm	deg
3862.74	23.90	32.01	2.14	46.26	11.79	54.00	-42.21	100	358
4060.54	21.32	32.38	2.08	46.17	9.61	54.00	-44.39	100	155
4535.26	21.32	33.83	1.41	46.63	9.94	54.00	-44.06	100	122
7534.67	25.50	39.95	3.30	45.93	22.82	54.00	-31.18	100	159
11597.2	38.16	41.01	3.41	41.81	40.77	54.00	-13.23	100	75
17202.1	34.33	46.61	6.31	42.08	45.17	54.00	-8.83	103	112

1GHz~ 40 GHz (Vertical), Turbo Mode, Channel 5: 5800 MHz

Operator: Mailes Hsieh

RBW: 1 MHz
Humidity (%): 39
Temperature (C): 22

Frequency	Rx_R.	Ant_F.	Cab_L.	PreAmpl	Emission	Limit	Margin	A.Tower	T.Table
MHz	dBuV	dB/m	dB	dB	dBuV/m	dBuV/m	dB	cm	deg
3546.25	21.98	31.56	2.08	46.60	9.03	54.00	-44.97	102	277
4110.89	21.34	32.53	2.01	46.22	9.66	54.00	-44.34	100	209
4542.46	21.32	33.86	1.41	46.64	9.95	54.00	-44.05	100	289
7768.43	26.15	40.28	3.16	44.83	24.75	54.00	-29.25	100	358
11592.3	39.20	41.00	3.40	41.80	41.80	54.00	-12.20	100	157
17539.9	34.33	47.67	6.19	42.06	46.13	54.00	-7.87	102	354

Note: " * ": Fundamental Frequency
" pk": peak reading
"av": average reading
The Spectrum noise level+Correction Factor<Limit-6 dB
Margin = Corrected Amplitude – Limit
Corrected Amplitude=Radiated Amplitude+Antenna Correction Factor+Cable Loss-Pre-Amplifier Gain
A margin of -8dB means that the emission is 8dB below the limit.

All frequencies from 1GHz to 40 GHz have been tested.

6.6 Band Edge Measurement (Section 15.407 (b) (1) (2))

6.6.1 Test Procedure (Conducted)

1. The Transmitter output of EUT was connected to the spectrum analyzer.
   Equipment mode: Spectrum analyzer

Peak Mode:	
SPAN	100MHz
RBW	1MHz
VBW	1MHz
Sweep Time	200msec.

2. Using Peak Search to read the peak power of Carrier frequencies after Maximum Hold function is completed.
3. Find the next peak frequency outside the operation frequency band.

6.6.2 Test Setup (Conducted)

6.6.3 Test Data (conducted):

Band Edge measurement (Conducted)

Temp. (deg. C): 25

Test Engr: Mailes Hsieh Humidity (%): 50

Outside Channel **Normal Mode**	Frequency (MHz)	Spectrum Reading (dBuV)	Corrected Factor (dB)	Corrected Emissions (dBuV ERP)	Limit: (dBuV ERP)	Pass or Fail
1	5134	63.43	1.2	64.63	80	Pass
8	5350	67.96	1.2	69.16	80	Pass
9	5724.9	82.76	1.2	83.96	90	Pass
9	5714.9	70.3	1.2	71.5	80	Pass
12	5825	82.91	1.2	84.11	90	Pass
12	5837.8	67.98	1.2	64.63	80	Pass
Outside Channel **Turbo Mode**	Frequency (MHz)	Spectrum Reading (dBuV)	Corrected Factor (dB)	Corrected Emissions (dBuV ERP)	Limit: (dBuV ERP)	Pass or Fail
1	5149.5	62.81	1.2	64.01	80	Pass
3	5354.2	62.53	1.2	63.73	80	Pass
4	5725	83.44	1.2	84.64	90	Pass
4	5714.8	74.06	1.2	75.26	80	Pass
5	5825	81.23	1.2	82.43	90	Pass
5	5835	73.55	1.2	64.01	80	Pass

Note: Corrected Emissions=Spectrum + Corrected Factor
Corrected Factor=Cable Loss+Antenna Peak Ga in (dBi)

Band Edge Conducted measurement (Normal Mode Channel 1)

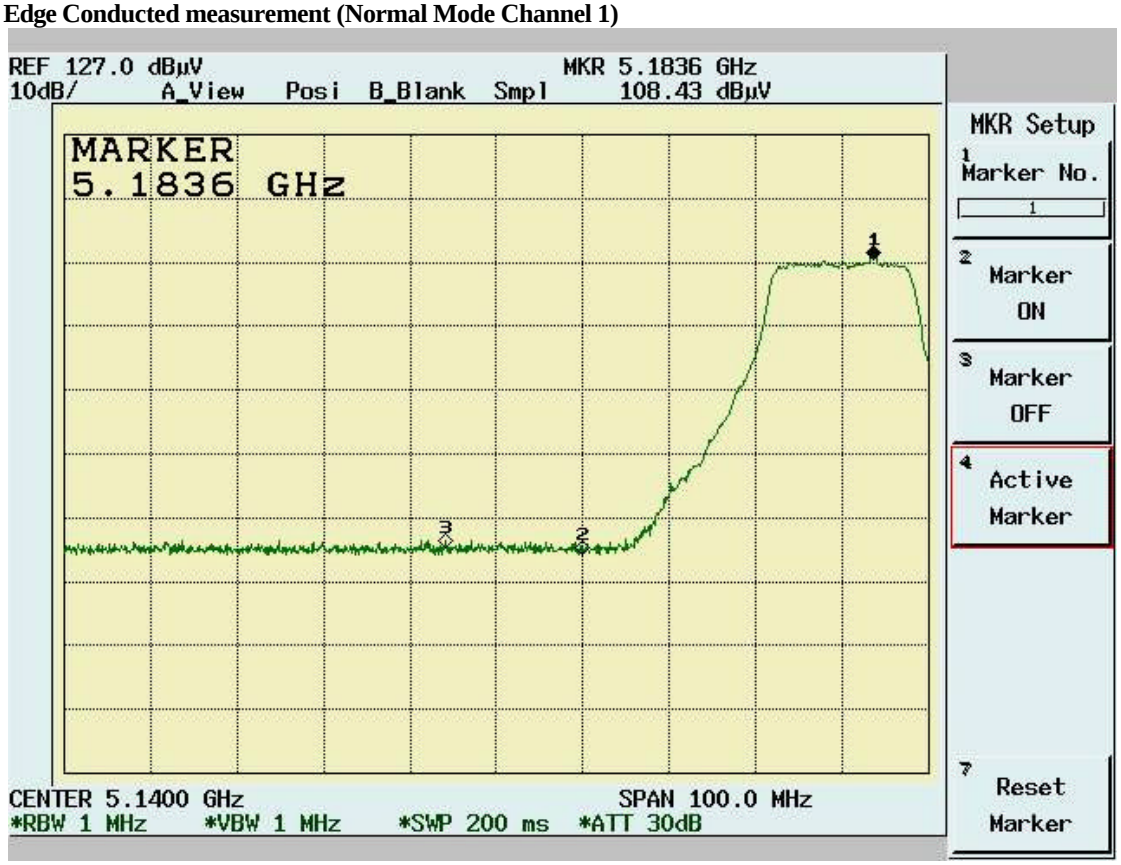

Band Edge Conducted Measurement (Normal Mode Channel 8)

Band Edge Conducted measurement (Normal Mode Channel 9)

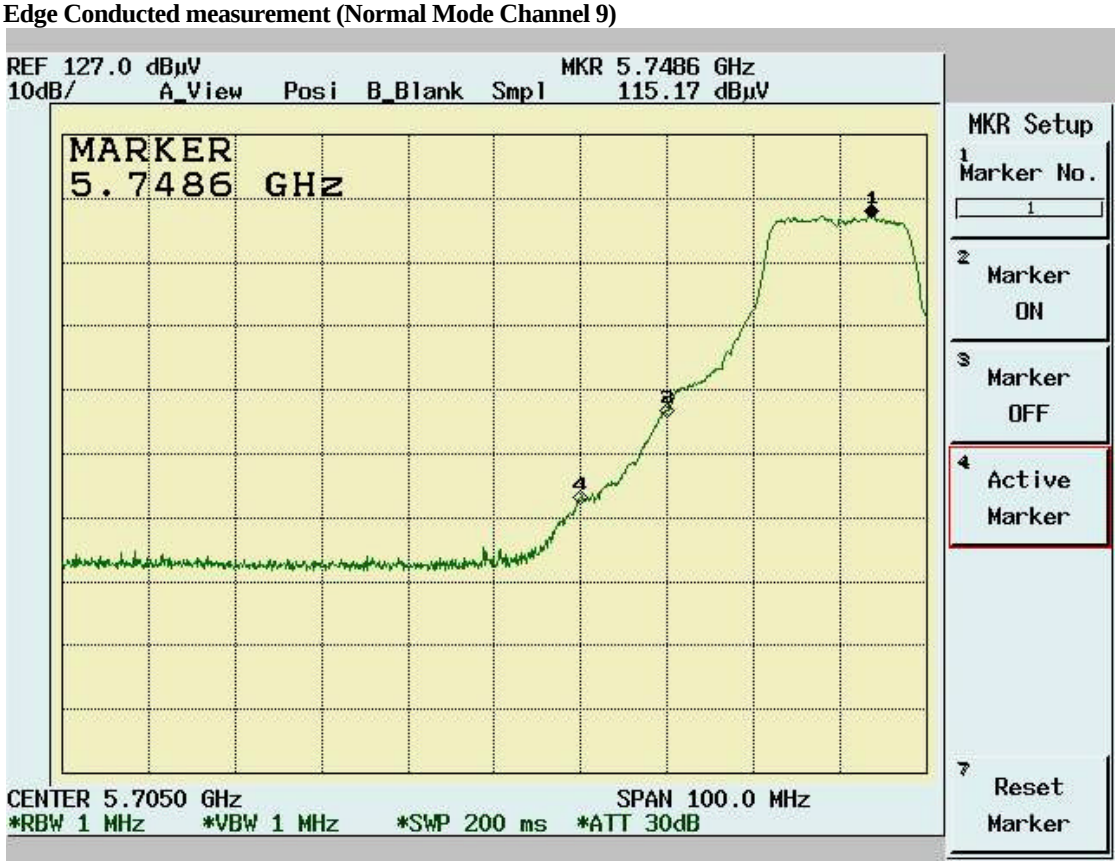

Band Edge Conducted Measurement (Normal Mode Channel 12)

Band Edge Conducted measurement (Turbo Mode Channel 1)

Band Edge Conducted Measurement (Turbo Mode Channel 3)

Band Edge Conducted measurement (Turbo Mode Channel 4)

Band Edge Conducted Measurement (Turbo Mode Channel 5)

6.6.4 Bandedge Measurement Test Procedure (Radiated)

1. Antenna and Turntable test procedure same as Radiated Emissions measurement listed in Para. 6.5
   Equipment mode: Spectrum analyzer

Peak Mode:	
SPAN	100MHz
RBW	1MHz
VBW	1MHz
Sweep Time	200msec.
AVE Mode:	
SPAN	100MHz
RBW	1MHz
VBW	10Hz
Sweep Time	20 sec.

2. Using Peak Search to read the peak power of Carrier frequencies after Maximun Hold function is completed.
3. Find the next peak frequency outside the operation frequency band.
4. Get the spectrum reading after Maximun Hold function is completed.

6.6.5 Test Setup (Radiated)

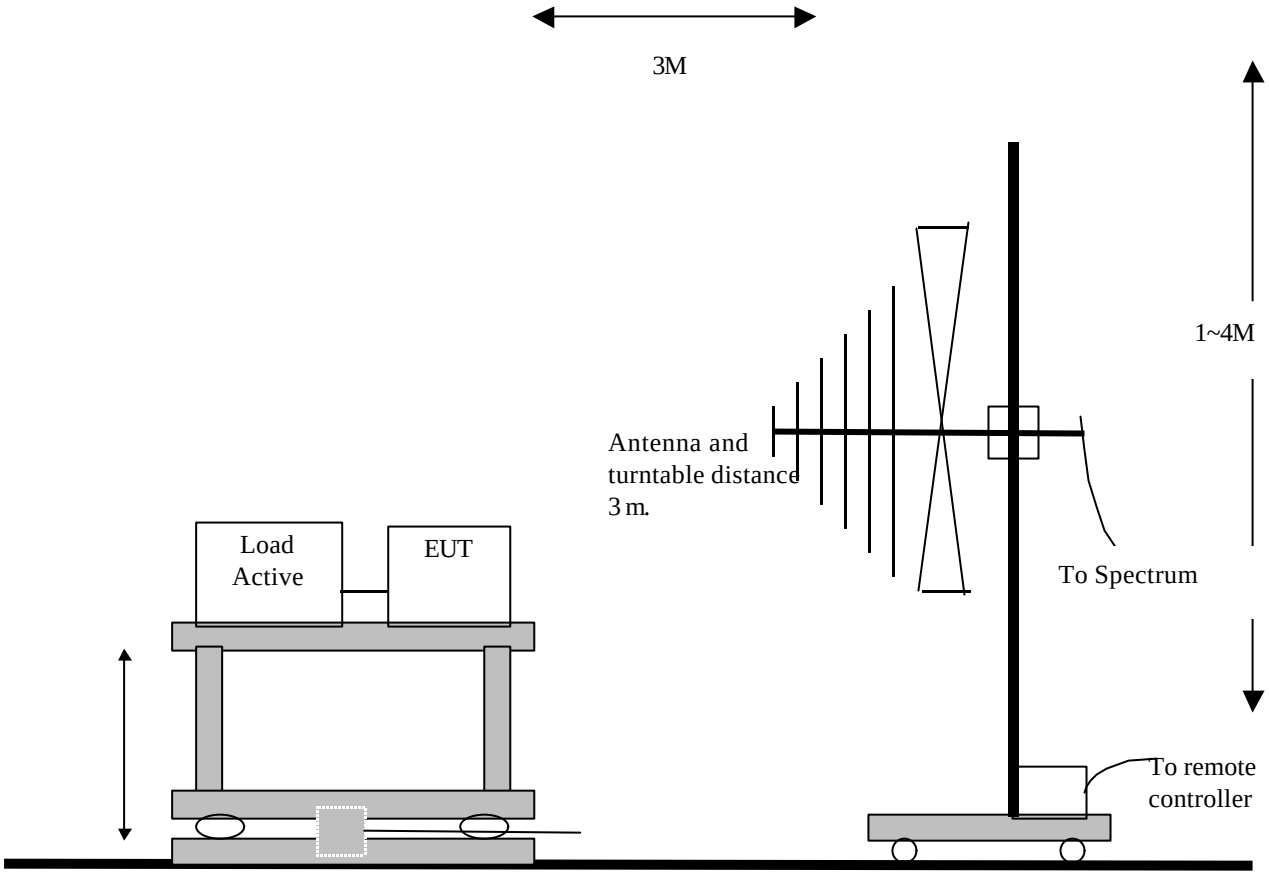

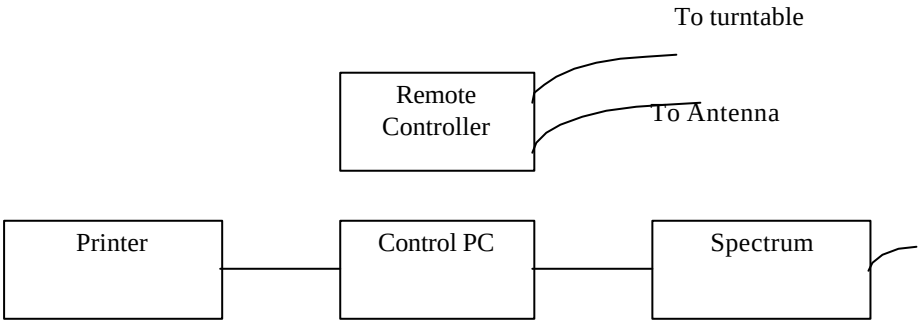

6.6.6 Test Data (Radiated):

Band Edge measurement (Radiated)

Temp. (deg. C): 25

Test Engr: Mailes Hsieh Humidity (%): 50

Outside Channel (Normal)	Frequency (MHz)	Spectrum Reading (dBuV)	Correction Factor (dB/m)	Emission Level (dBuV/m)	Limit (dBuV/m)	Pass/Fail
1 (Peak)	5142.8	22.55	38.21	60.76	74	Pass
1 (Average)	5149	9.36	38.21	47.57	54	Pass
8 (Peak)	5350	70.3	38.21	63.06	74	Pass
8 (Average)	5350	10.95	38.21	49.16	54	Pass
9 (Peak)	5714.9	25.56	38.21	63.77	74	Pass
9 (Average)	5715	9.59	38.21	47.8	54	Pass
12 (Peak)	5836.5	23.03	38.21	61.24	74	Pass
12 (Average)	5835.3	9.42	38.21	47.63	54	Pass

Outside Channel (Turbol)	Frequency (MHz)	Spectrum Reading (dBuV)	Correction Factor (dB/m)	Emission Level (dBuV/m)	Limit (dBuV/m)	Pass/Fail
1 (Peak)	5148.5	22.74	38.21	60.95	74	Pass
1 (Average)	5148.3	9.72	38.21	47.93	54	Pass
3 (Peak)	5351	23.71	38.21	61.92	74	Pass
3 (Average)	5350	10.08	38.21	48.29	54	Pass
4 (Peak)	5714.8	28.2	38.21	66.41	74	Pass
4 (Average)	5715	13.55	38.21	51.76	54	Pass
5 (Peak)	5835.2	26.86	38.21	65.07	74	Pass
5 (Average)	5835	13.07	38.21	51.28	54	Pass

Note: "pk": peak reading
"av": average reading
Emission Level=Spectrum Reading+Correction Factor
Correction Factor =Antenna Factor+cable loss
Both Horizontal and Vertical polarization have been tested and the worst data is listed above.

Band Edge measurement for radiated emission in Restricted Band(Radiated)
Normal Mode (Channel 1) Peak data

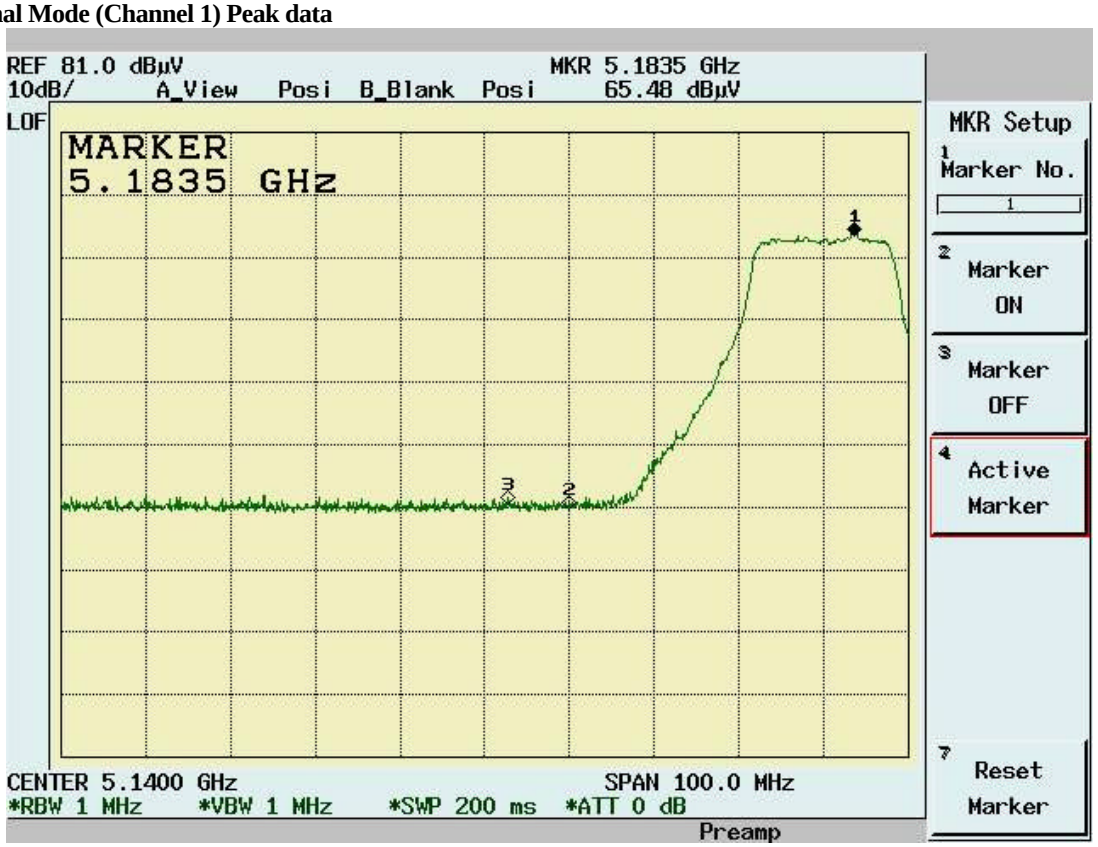

Normal Mode (Channel 1) Average Data

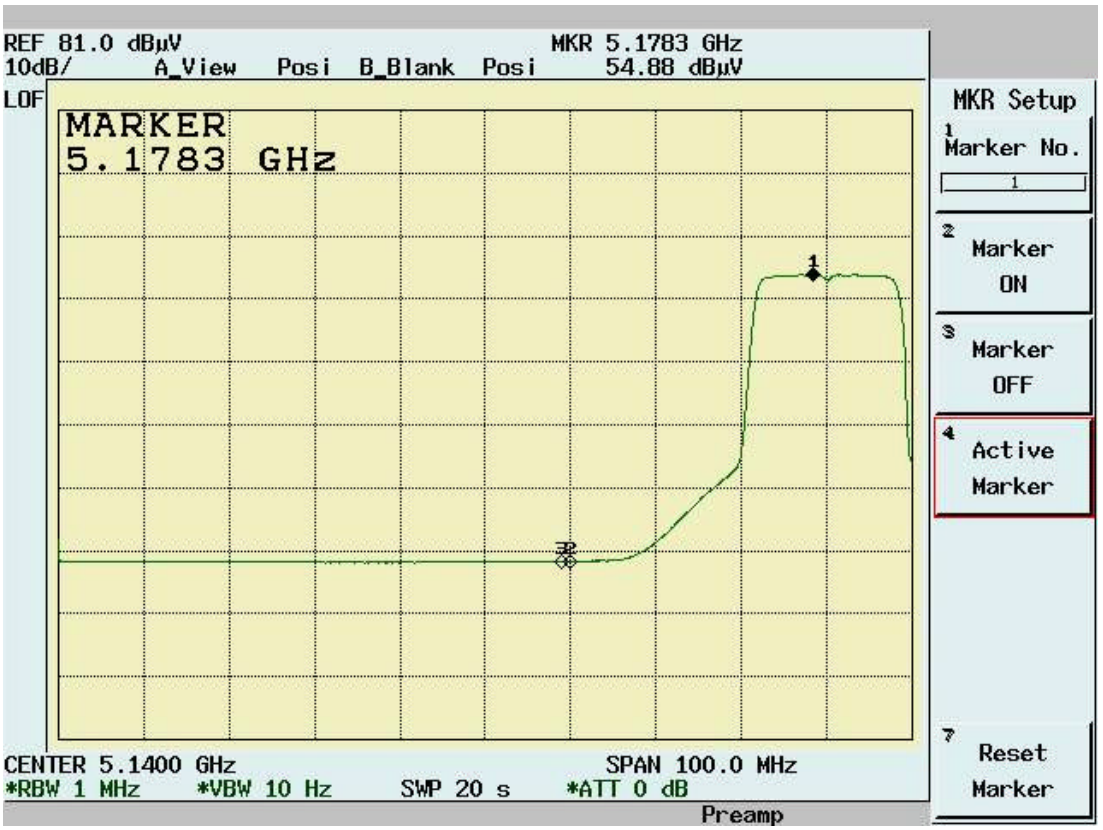

Normal Mode (Channel 8) Peak data

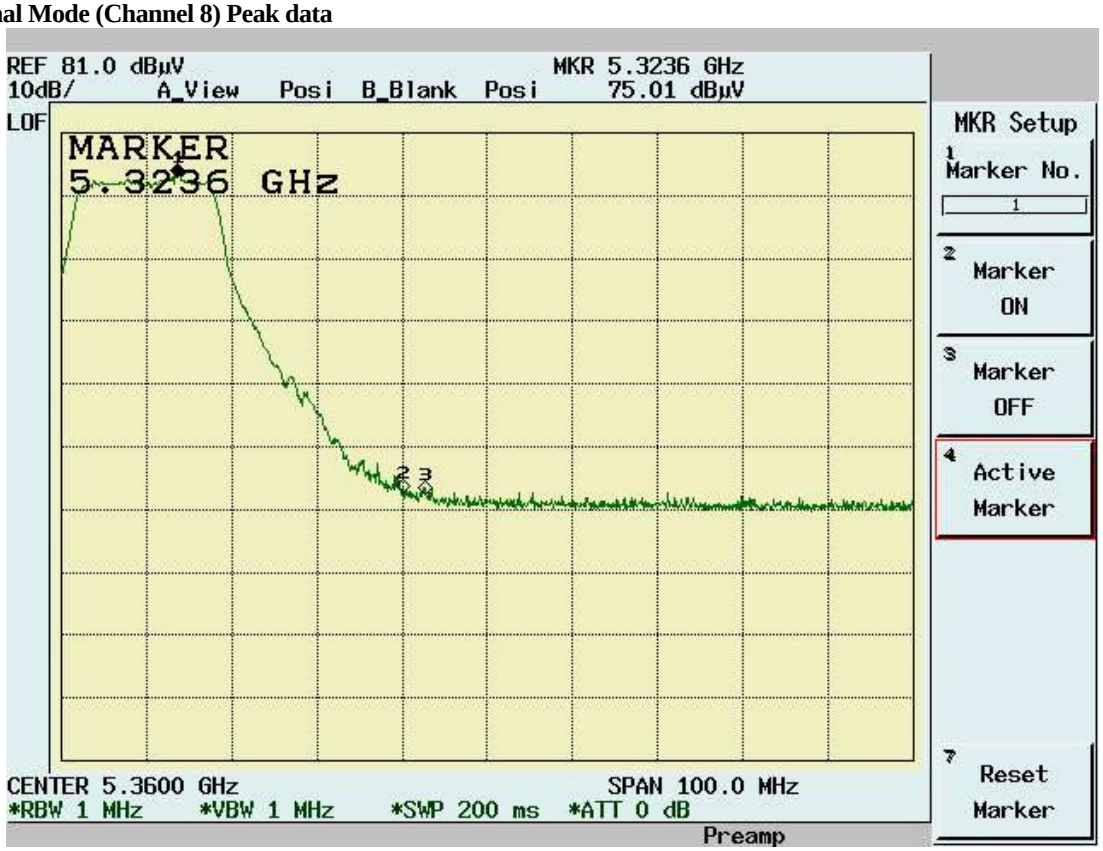

Normal Mode (Channel 8) Average data

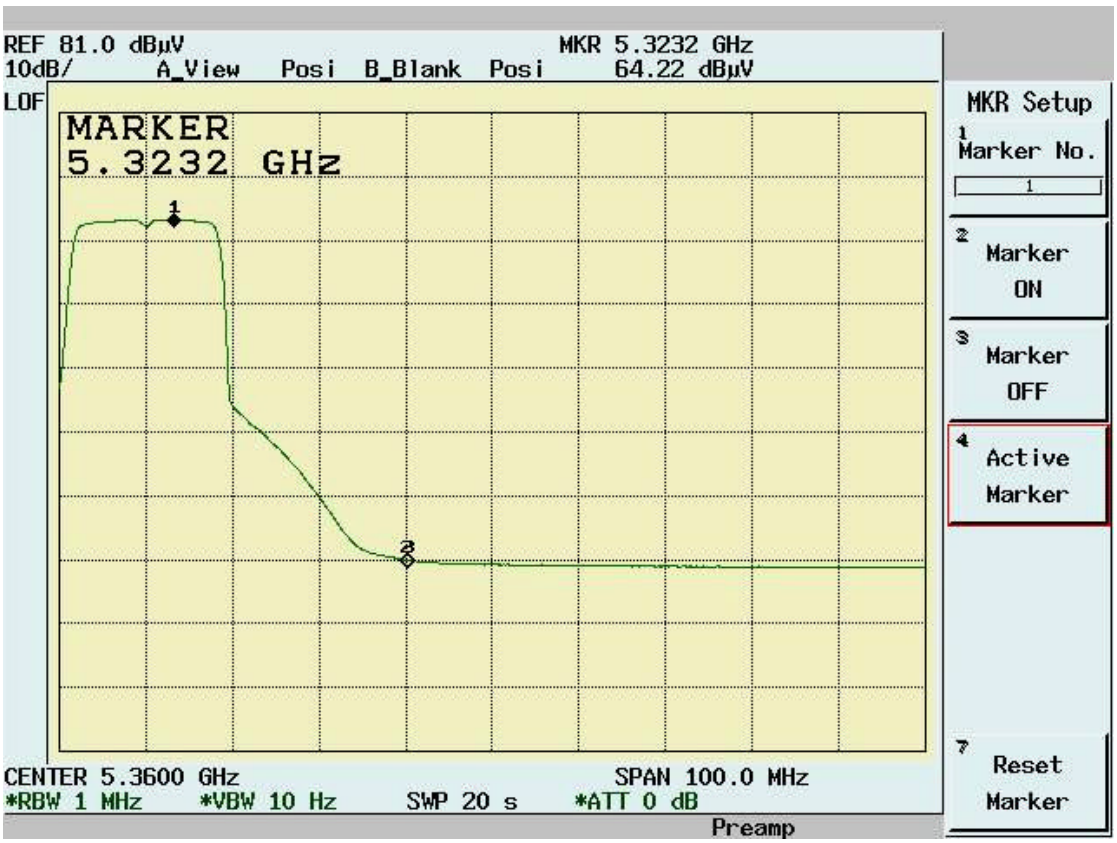

Normal Mode (Channel 9) Peak data

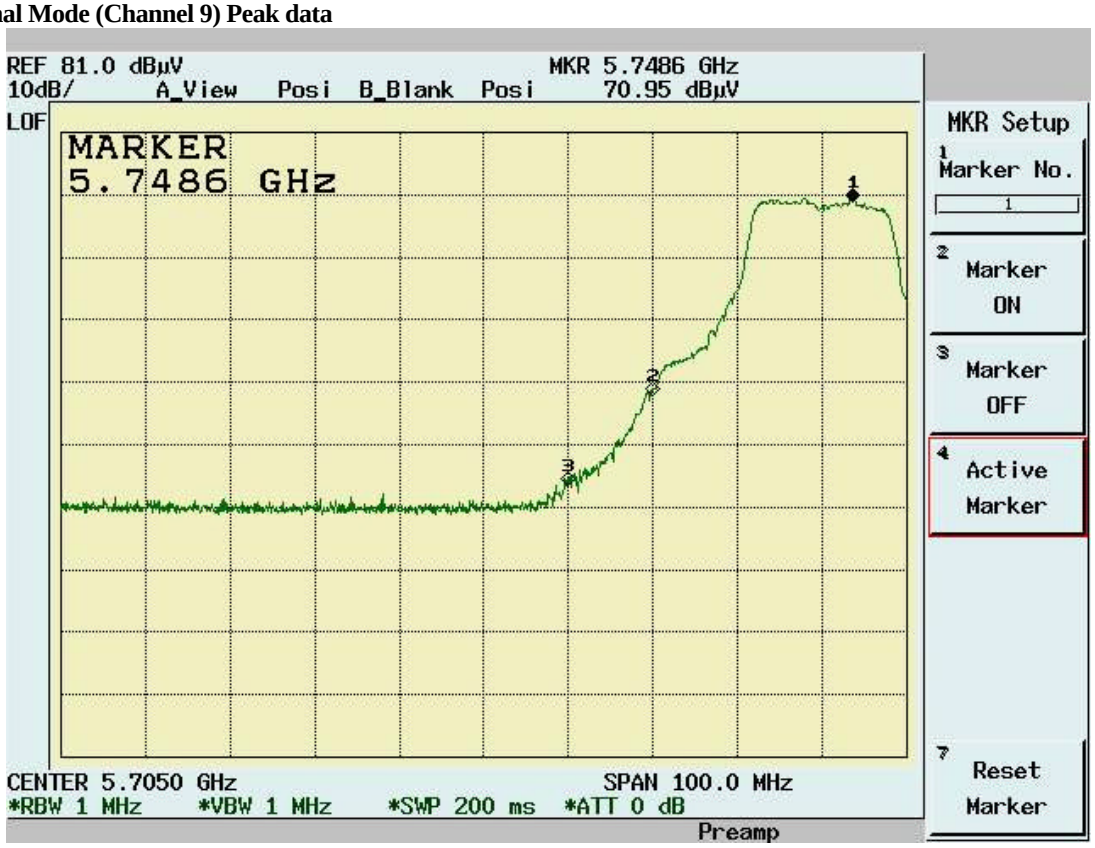

Normal Mode (Channel 9) Average Data

Normal Mode (Channel 12) Peak data

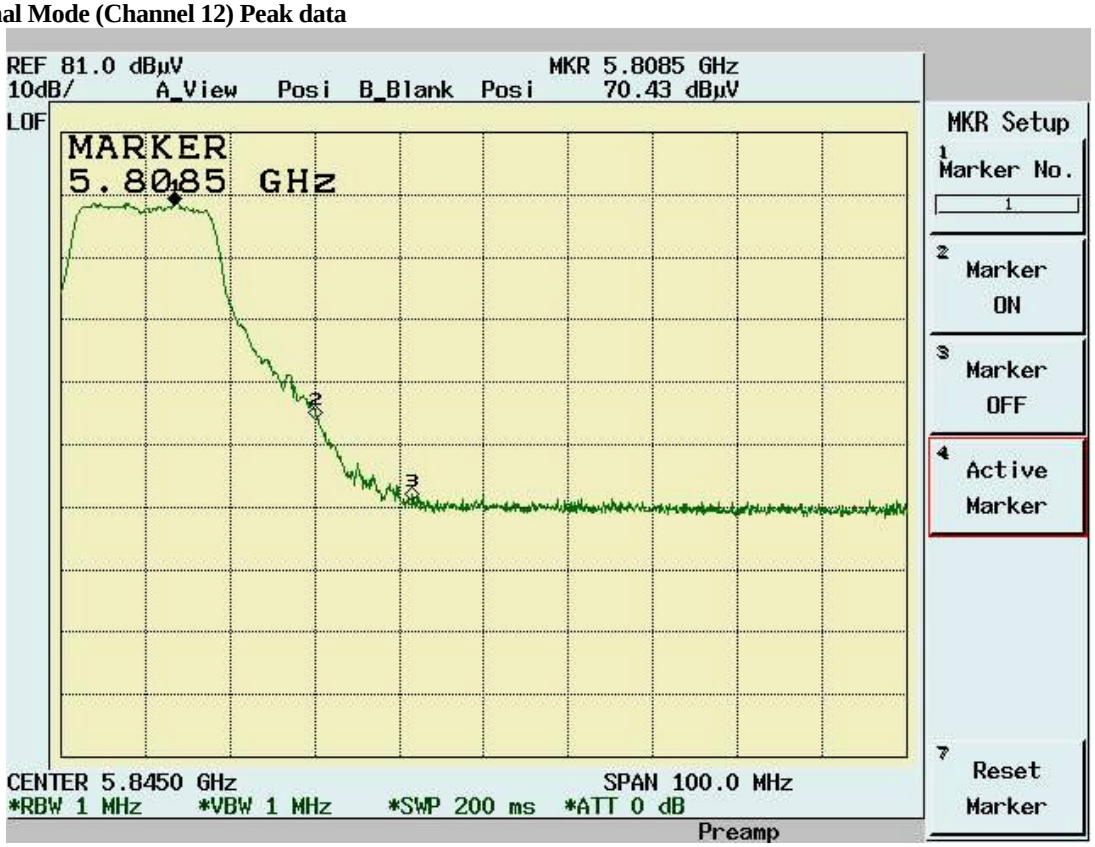
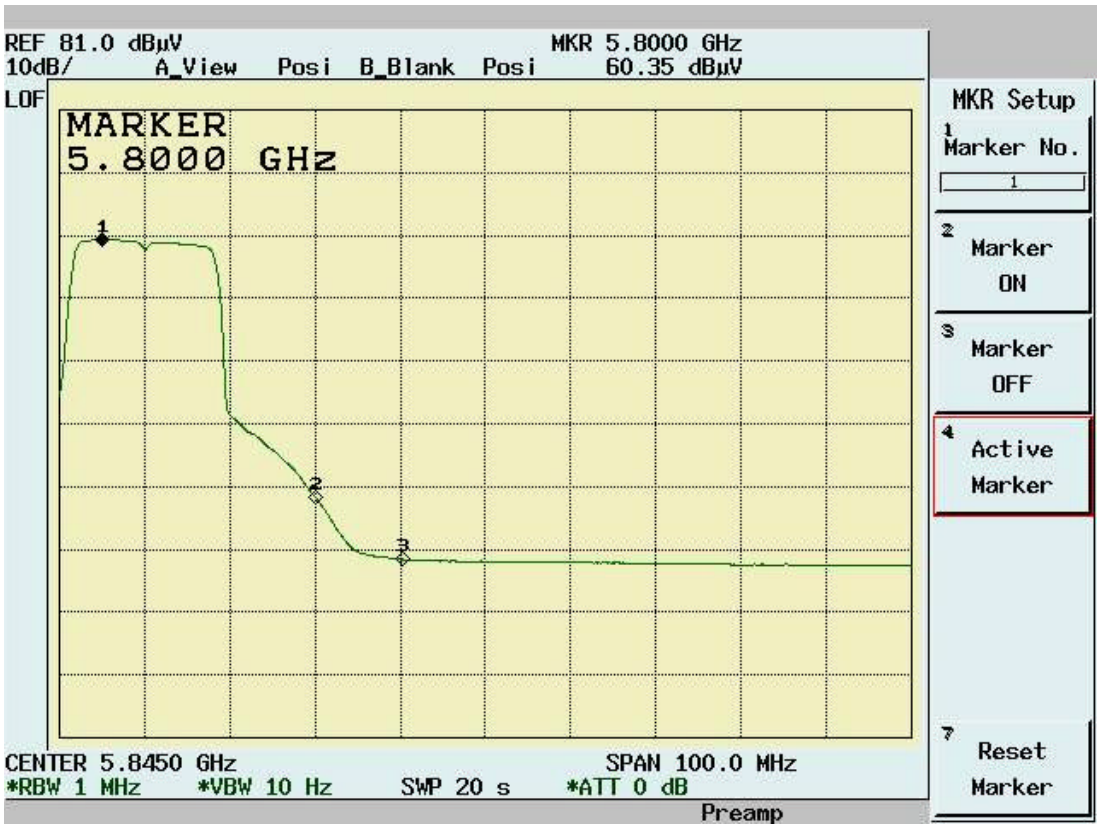
Normal Mode (Channel 12) Average Data