User Manual

Project Name: IMQ6 Module

Author: Wistron NeWeb Corporation

Revision: 0.3

Revision Date: 2020/11/28

Preliminary

Contact Information

Technical Support website	https://SupportIoT.wnc.com.tw
Company Website	www.wnc.com.tw

Revision History

Rev. #	Author	Summary of Changes	Date
0.1	WNC	First release	2020/09/15
0.2	WNC	Update Safety Recommendation	2020/11/10
0.3	WNC	Update Safety Recommendation	2020/11/28

Preliminary

© Wistron NeWeb Corporation

THIS DOCUMENT AND THE INFORMATION CONTAINED HEREIN IS PROPRIETARY AND IS THE EXCLUSIVE PROPERTY OF WNC AND SHALL NOT BE DISTRIBUTED, REPRODUCED, OR DISCLOSED IN WHOLE OR IN PART WITHOUT PRIOR WRITTEN PERMISSION FROM WNC.

LIMITATION OF LIABILITY

THIS DOCUMENT AND THE INFORMATION CONTAINED HEREIN IS PURELY FOR DESIGN REFERENCE AND SUBJECT TO REVISION BY WNC AT ANY TIME. NOTHING IN THIS DOCUMENT SHALL BE CONSTRUED AS GRANTING ANY WARRANTY OR RIGHT TO USE THE MATERIAL CONTAINED HEREIN WITHOUT WNC'S PRIOR EXPRESS WRITTEN CONSENT. WNC SHALL NOT BE LIABLE FOR ANY USE, APPLICATION OR DEVELOPMENT DERIVED FROM THE MATERIAL WITHOUT SUCH PRIOR EXPRESS WRITTEN CONSENT.

Preliminary

Contents

Contact Information **2**

Revision History **2**

Contents **4**

1. Introduction **6**

1.1. RF band support 6

1.2. Features 6

1.3. Architecture 7

1.4. Connection Interface 7

1.5. Environmental Specifications and Certifications 7

1.5.1. Environmental Specifications 7

1.5.2. Certifications 8

1.5.3. Green Product Compliance 8

2. Pin Definitions **8**

2.1. LGA Module Pin Diagram 8

2.2. LGA Module Pin Definitions 9

3. Electrical Specifications **14**

3.1. Power supply 14

3.2. RF Specifications 15

3.2.1. Band support 15

3.2.2. Bandwidth support 16

3.2.3. RF transmit specifications 16

3.2.4. RF receiver specifications 17

Preliminary

3.2.5. GNSS receiver specifications..... 18

4. Software Interface..... 18

4.1. Support tools..... 18

4.2. USB interface..... 18

5. Mechanical..... 19

5.1. PCBA Form Factor..... 19

6. Design Guide..... 22

6.1. Power supply..... 22

6.2. RF connection..... 23

6.3. Reflow..... 26

7. Labeling and Packaging..... 29

7.1. Labeling..... 29

7.2. Packaging..... 29

7.3. MSL level..... 31

8. Safety Recommendation..... 32

Initialisms..... 36

Preliminary

1. Introduction

The WNC IMQ6 module includes the Qualcomm MDM9205 Cat. M1 baseband, a complete LTE RF front-end, memory, and required circuitry to fulfill requirements of 3GPP E-UTRA (Long Term Evolution - LTE, Rel-14 specifications). The IMQ6 module provides a variety of interfaces including USB, SPI, UART, GPIO, I2C, and USIM.

1.1. RF band support

This section lists the main features and functions that the IMQ6 module supports. Table 1-1 specifies wireless technologies supported.

Module	LTE CAT M1	LTE CAT NB2	GPRS/EGPRS	GNSS
IMQ6	√	×	√	√

Table 1-1. IMQ6 module overview

Note: √ = supported, × = not supported

1.2. Features

Feature list:

- LTE 3GPP release 14
- 3GPP category support: LTE Cat. M1 with 1.2 Mbps for UL, 375 Kbps for DL
- LTE Support Bands:B2/3/4/5/12/13/20
- Power Class 5: 21dBm
- GNSS: GPS, GLONASS
- Cortex A7 microprocessor (performance enhanced)
- IPv4/IPv6-supported
- AT command set
- LwM2M, FOTA

Preliminary

- SMS over NAS
- Interfaces
- HS USB 2.0 with integrated PHY
- Dual UART interfaces (4 bit and 2 bit) for data transfer and diagnostic tools
- I2C/SPI interface
- USIM interface
- GPIOs
- ADC
- PCM/I2S

1.3. Connection Interface

The IMQ6 module is LGA device. All electrical and mechanical connections are made through the 104 pads on the bottom side of a PCB.

1.4. Environmental Specifications and Certifications

1.4.1. Environmental Specifications

The environmental specifications for both operating and storage conditions are defined in the Table below.

Condition	Temperature Range	Remark
Normal operating temperature range	–20 °C to 60 °C	Fully functional and in compliance with 3GPP specifications
Extended operating temperature range	–40 °C to 85°C	RF performance may be affected outside the normal range, but the module will still function.
Storage	–40 °C to 85 °C	

Table 1-2. Temperature range

Preliminary

Note: All temperatures above refer to ambient temperatures.

1.4.2. Certifications

The IMQ6 module is certified to be compliant with PTCRB, GCF,CE,FCC regulations and standards.

1.4.3. Green Product Compliance

RoHS (2011/65/EU)

2. Pin Definitions

2.1. LGA Module Pin Diagram

The IMQ6 LGA module pin layout is illustrated below.

Preliminary

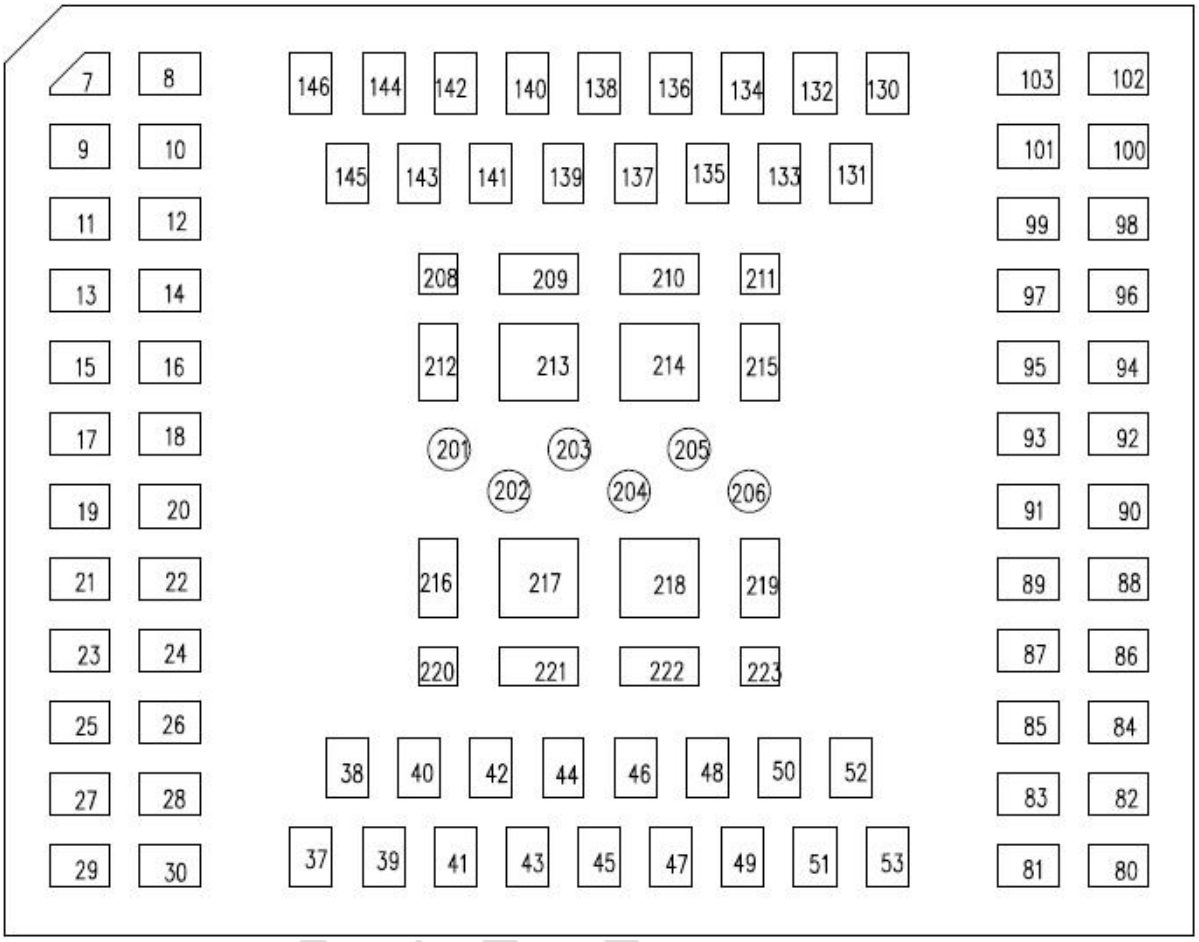

Figure 2-1. LGA pad diagram (top view)

2.2. LGA Module Pin Definitions

A complete list with related details for the module pinout are listed in the Table below:

Pin No.	Pin definition/type	Voltage Level (V)		
		Min.	Typ.	Max.

7	GND	-	0	-
8	GND	-	0	-
9	NC	-	-	-
10	GND	-	0	-
11	GND	-	0	-
12	GND	-	0	-
13	GND	-	0	-
14	GND	-	0	-
15	RF_1(LTE TRX)	-	-	-
16	GND	-	0	-
17	GND	-	0	-
18	GND	-	0	-
19	GND	-	0	-
20	GND	-	0	-
21	RF_2(GNSS)	-	-	-
22	GND	-	0	-
23	GND	-	0	-
24	GND	-	0	-
25	GND	-	0	-
26	GND	-	0	-
27	NC	-	-	-
28	GND	-	0	-
29	GND	-	0	-

Preliminary

30	GND	-	0	-
37	VCC1	3.3	3.8	4.5
38	VCC2	3.3	3.8	4.5
39	VCC3	3.3	3.8	4.5
40	VCC4	3.3	3.8	4.5
41	VCC5	3.3	3.8	4.5
42	VCC6	3.3	3.8	4.5
43	NC	-	-	-
44	GND	-	0	-
45	GND	-	0	-
46	GPIO46	1.7	1.8	1.9
47	GPIO47	1.7	1.8	1.9
48	GPIO48	1.7	1.8	1.9
49	GPIO49	1.7	1.8	1.9
50	GND	-	0	-
51	GND	-	0	-
52	GPIO01	1.7	1.8	1.9
53	GPIO02	1.7	1.8	1.9
80	GPIO80	1.7	1.8	1.9
81	GPIO81	1.7	1.8	1.9
82	GPIO82	1.7	1.8	1.9
83	GPIO83	1.7	1.8	1.9
84	GND	-	0	-

Preliminary

85	GND	-	0	-
86	USB_Dp	-	Note6	-
87	USB Detect	1.7	1.8	1.9
88	USB_Dn	-	Note6	-
89	UART2_RTS	1.7	1.8	1.9
90	NC	-	-	-
91	UART2_CTS	1.7	1.8	1.9
92	UART0_CTS	1.7	1.8	1.9
93	UART0_TX	1.7	1.8	1.9
94	UART2_TX	1.7	1.8	1.9
95	UART0_RX	1.7	1.8	1.9
96	UART2_RX	1.7	1.8	1.9
97	UART0_RTS	1.7	1.8	1.9
98	GPIO98	1.7	1.8	1.9
99	GPIO99	1.7	1.8	1.9
100	GPIO100	1.7	1.8	1.9
101	GPIO101	1.7	1.8	1.9
102	GPIO102	1.7	1.8	1.9
103	GPIO103	1.7	1.8	1.9
130	GPIO06/vGPIO Data In/AUX_ADC1	1.7	1.8	1.9
131	GPIO07	1.7	1.8	1.9
132	GNSS_EN/GPIO08	1.7	1.8	1.9
133	UIM_VCC/1.8V	1.7	1.8	1.9

Preliminary

134	UIM DATA	1.7	1.8	1.9
135	UIM CLK	1.7	1.8	1.9
136	UIM RESET	1.7	1.8	1.9
137	UIM DETECT	1.7	1.8	1.9
138	RFFE3_CLK/GPIO138	1.7	1.8	1.9
139	GND	-	0	-
140	RFFE3_DATA/GPIO140	1.7	1.8	1.9
141	WWAN_STATE	1.7	1.8	1.9
142	Power on	1.7	1.8	1.9
143	WAKEUP_OUT	1.7	1.8	1.9
144	WAKEUP_IN	1.7	1.8	1.9
145	RESET	1.7	1.8	1.9
146	VREF	1.7	1.8	1.9
208	SPI_EN	1.7	1.8	1.9
209	SPI_CLK	1.7	1.8	1.9
210	SPI_MOSI	1.7	1.8	1.9
211	SPI_MISO	1.7	1.8	1.9
212	GND	-	0	-
213	GND	-	0	-
214	GND	-	0	-
215	GND	-	0	-
216	GND	-	0	-
217	GND	-	0	-

Preliminary

218	GND	-	0	-
219	GND	-	0	-
220	PS_HOLD	1.7	1.8	1.9
221	Force usb boot	1.7	1.8	1.9
222	UART1_RX (UART 1)	1.7	1.8	1.9
223	UART1_TX (UART 1)	1.7	1.8	1.9

Table 2-1. Module pin definitions

Preliminary

3. Electrical Specifications

3.1. Power supply

The IMQ6 module receives and supplies power with the following potentials:

	Direction	Vmin	Typical	Vmax
Power (37–42)	In	3.3 V	3.8 V	4.2 V
VREF	Out	1.71 V	1.8 V	1.89 V
UIM_VCC	Out	1.71 V	1.8 V	1.89 V

Table 3-1. Power supply

3.2. RF Specifications

3.2.1. Band support

LTE CAT M1	Uplink (MHz)	Downlink (MHz)
LTE Band 2	1850–1910	1930–1990
LTE Band 3	1710-1785	1805-1880
LTE Band 4	1710–1755	2110–2155
LTE Band 5	824–849	869–894
LTE Band 12	699–716	729–746
LTE Band 13	777-787	746-756
LTE Band 20	832-862	791-821
GSM Band	Uplink (MHz)	Downlink (MHz)
GSM 850	824–849	869–894

Preliminary

GSM900	880-915	925-960
DCS1800	1710-1785	1805-1880
PCS1900	1850–1910	1930–1990

Table 3-2. Band support

3.2.2. Bandwidth support

Band	Bandwidth					
	1.4 MHz	3 MHz	5 MHz	10 MHz	15 MHz	20 MHz
LTE Band 2	✓	✓	✓	✓	✓	✓
LTE Band 3	✓	✓	✓	✓	✓	✓
LTE Band 4	✓	✓	✓	✓	✓	✓
LTE Band 5	✓	✓	✓	✓	-	-
LTE Band 12	✓	✓	✓	✓	-	-
LTE Band 13	-	-	✓	✓	-	-
LTE Band 20	-	-	✓	✓	✓	✓

Table 3-3. LTE CAT-M1 Bandwidth support

3.2.3. RF transmit specifications

	Band	Parameter	Unit	Min.	Typ.	Max.
LTE Band 2	Max. TX Power	10 MHz 4 RBs/QPSK	dBm	17.3		22.7

Preliminary

LTE Band 3	Max. TX Power	10 MHz 4 RBs/QPSK	dBm	17.3		22.7
LTE Band 4	Max. TX Power	10 MHz 4 RBs/QPSK	dBm	17.3		22.7
LTE Band 5	Max. TX Power	10 MHz 4 RBs/QPSK	dBm	17.3		22.7
LTE Band 12	Max. TX Power	10 MHz 4 RBs/QPSK	dBm	17.3		22.7
LTE Band 13	Max. TX Power	10 MHz 4 RBs/QPSK	dBm	17.3		22.7
LTE Band 20	Max. TX Power	10 MHz 4 RBs/QPSK	dBm	17.3		22.7
Band	Items	Parameter	Unit	Min.	Typ.	Max.
GSM 850	Max. TX power	-	dBm	31		35
GSM900	Max. TX power	-	dBm	31		35
DCS1800	Max. TX power	-	dBm	28		32
PCS1900	Max. TX power	-	dBm	28		32

Table 3-4. Conductive Tx output power

Note: 1. RF transmitter specifications are defined at the LGA pad.

2. The IMQ6 series meets 3GPP TS 36.521-1/TS 51.010-1 test standards.

3.2.4. RF receiver specifications

LTE Band	Items	Parameter	Unit	Typ.	3GPP limit
LTE Band 2	RX Sensitivity	5 MHz with 4 RBs	dBm		-100.3
LTE Band 3	RX Sensitivity	5 MHz with 4 RBs	dBm		-99.3
LTE Band 4	RX Sensitivity	5 MHz with 4 RBs	dBm		-102.3

Preliminary

LTE Band 5	RX Sensitivity	5 MHz with 4 RBs	dBm		-100.8
LTE Band 12	RX Sensitivity	5 MHz with 4 RBs	dBm		–99.3
LTE Band 13	RX Sensitivity	5 MHz with 4 RBs	dBm		–99.3
LTE Band 20	RX Sensitivity	5 MHz with 4 RBs	dBm		-99.8
GSM Band	**Items**	**Parameter**	**Unit**	**Typ.**	**Max.**
GSM 850	RX Sensitivity	-	dBm		–102
GSM900	RX Sensitivity	-	dBm		–102
DCS1800	RX Sensitivity	-	dBm		–102
PCS1900	RX Sensitivity	-	dBm		–102

Table 3-5. Conductive Rx sensitivity-3GPP

Note: 1. RF receiver specifications are defined at the LGA pad.

2. The IMQ6 series meets 3GPP TS 36.521-1/TS 34.121-1 test standards.

3.2.5. GNSS receiver specifications

One GNSS SAW filter, LNA need to be used between the module and antenna.

Preliminary

4. Software Interface

4.1. Support tools

The IMQ6 module is compatible with the following support tools:

- WNC IMQ6 Connection Manager (WNCCM) (TBD)

4.2. USB interface

The IMQ6 module supports 3GPP's standard AT commands and proprietary AT commands.

5. Mechanical

5.1. PCBA Form Factor

The IMQ6 module has the same dimensions as the PCBA:

19.8 mm (typ.) × 15.5 mm (typ.) × 2.36 mm (typ.)

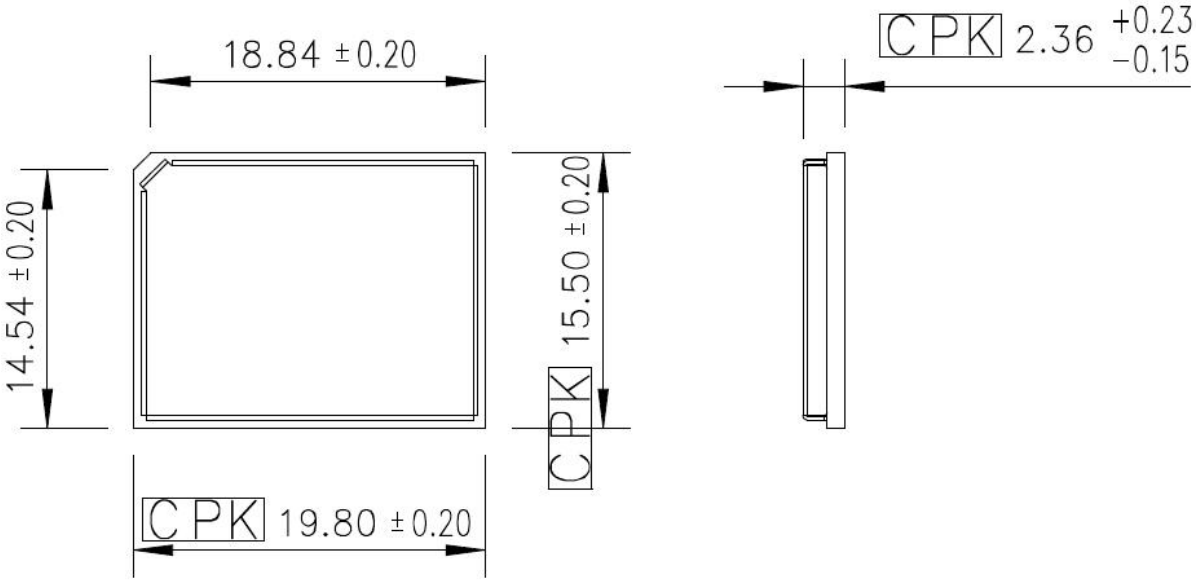

Figure 5-1. PCBA dimensions

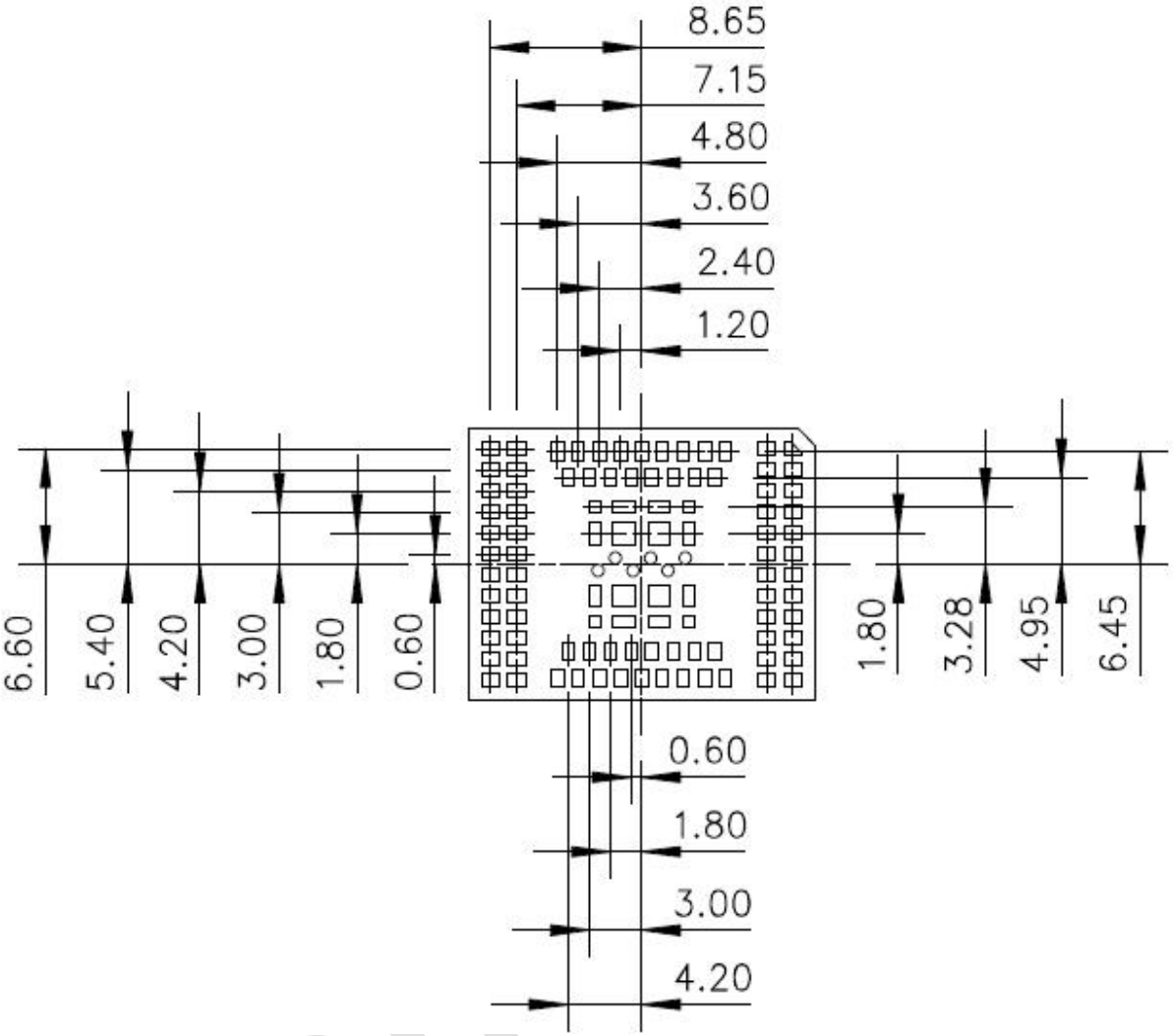

Figure 5-2. Pad dimensions (bottom view)

Prel

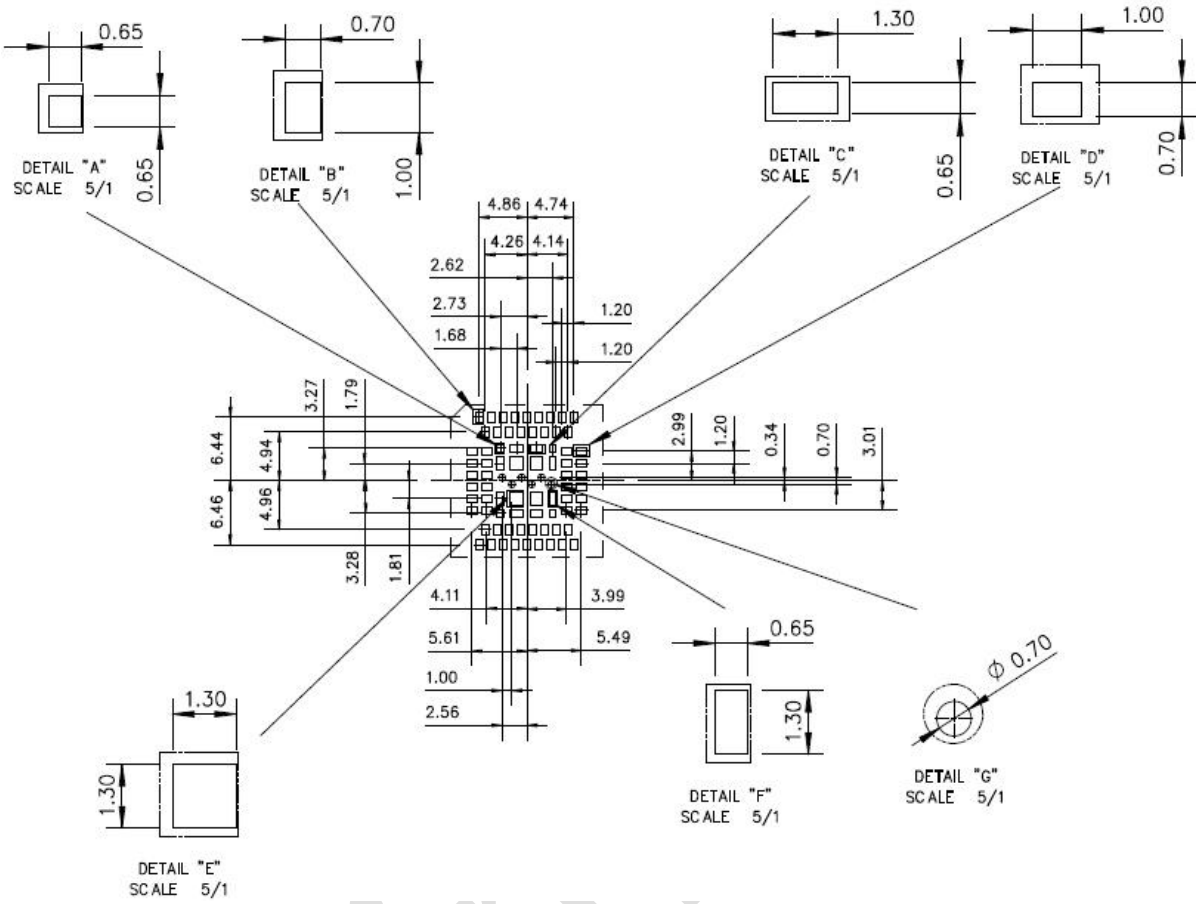

Figure 5-3. Recommend PCB footprint

Prelim

6. Design Guide

6.1. Power supply

The LTE module power input is VCC. The internal power chipset will transform VCC to other power levels.

Power	Pin Name	Pads	Description	Voltage Level (V)		
				Min.	Typ.	Max.
VCC	VCC1 to VCC6	Nos. 37 to 42	Main Power Supply	3.3	3.8	4.2

Table 6-1. Power supply voltage level

The IMQ6 module includes an integrated power manager that enables single and direct voltage supply from the battery and reduces the overall bill of materials. The typical voltage of 3.8V is recommended.

Schematic suggestion: We highly recommend separating module power supply into two paths to maintain clean power as shown below for TX spurious performance. The VPH_PWR is for baseband and RF circuits.

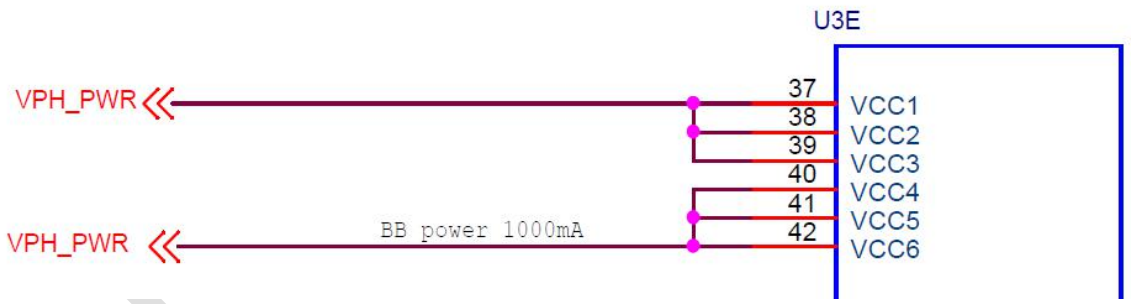

Layout Suggestion: 22µF, 0.1uF, 12pF and 8pF capacitors must be placed as close to VCC pins as possible. Each power trace must possess sufficient line width to withstand its respective current load, as listed in the table below:

Net Name	Current Value
VCC(1–3) total	1A
VCC(4–6) total	1A
UIM_VCC	150 mA
VREF	300 mA

6.2. RF connection

The IMQ6 module has three RF pads; developers must connect them via 50 Ω traces to the main board.

RF_1(LTE TRX) (Pin15) – LTE/GSM RX/TX path
RF_2(ANSS) (Pin21) – GNSS path

We recommend that no grounds are present under the surface of RF pads in the layout. Details are included below. Layer2 has the same keep-out size as Layer1

Preliminary

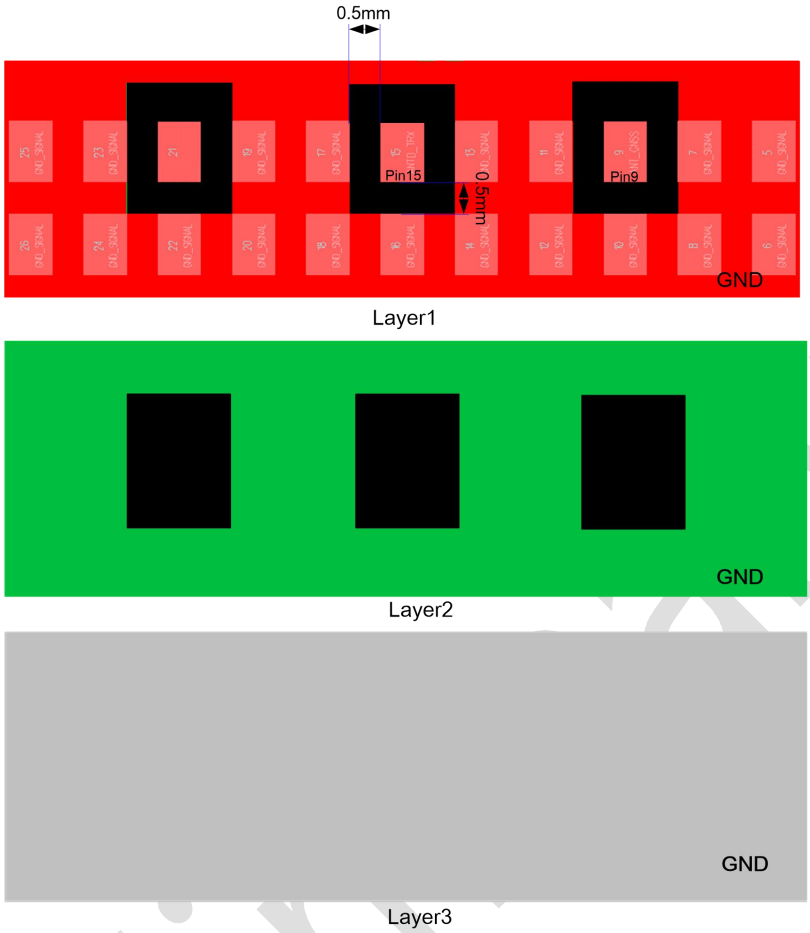

Figure 6-1. RF pad layout suggestion

The characteristic impedance depends on the dielectric of PCB, the track width and the ground plane spacing. Microstrip type is required. The detail simulation as below.

Preliminary

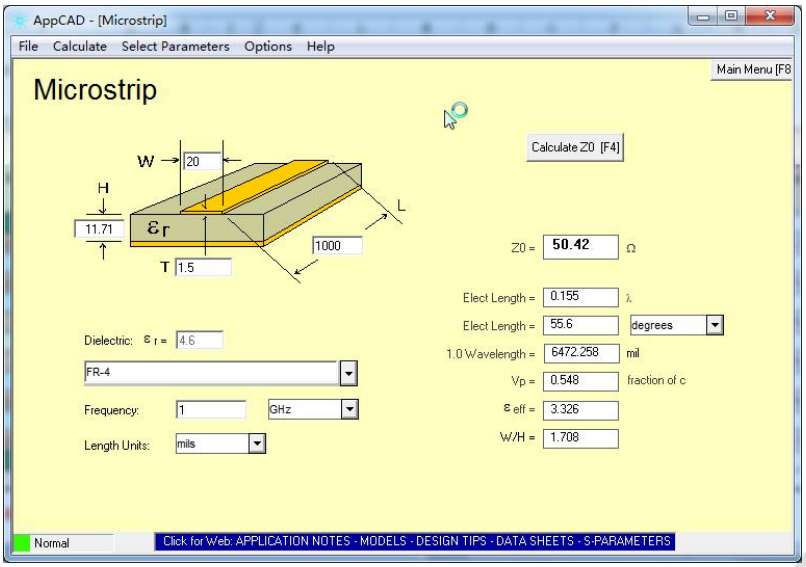

The RF trace of the test board which was used in the FCC test is defined as below.

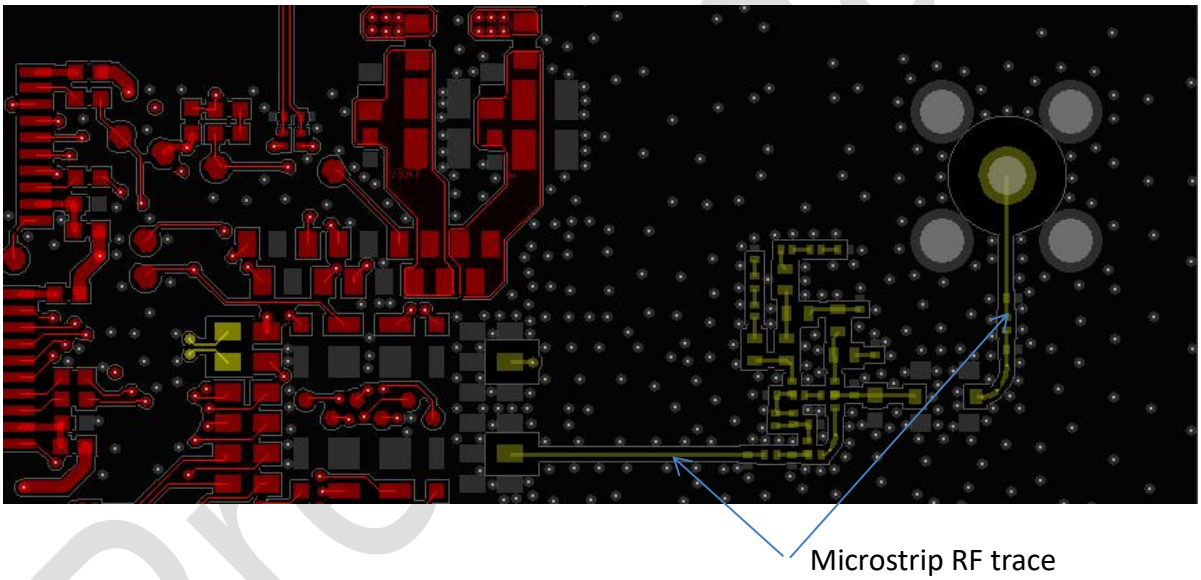

Preliminary

6.3. Reflow

This section details the recommended reflow profile when the module is mounted onto other boards.

Temp. Region	1	2	3	4	5	6	7	8	9	10	11
Upper temp. region	160	170	180	180	180	205	225	230	240	250	245
Lower temp. region	160	170	180	180	180	205	225	230	240	250	245
Conveyer band speed	90 cm/minute										

Preliminary

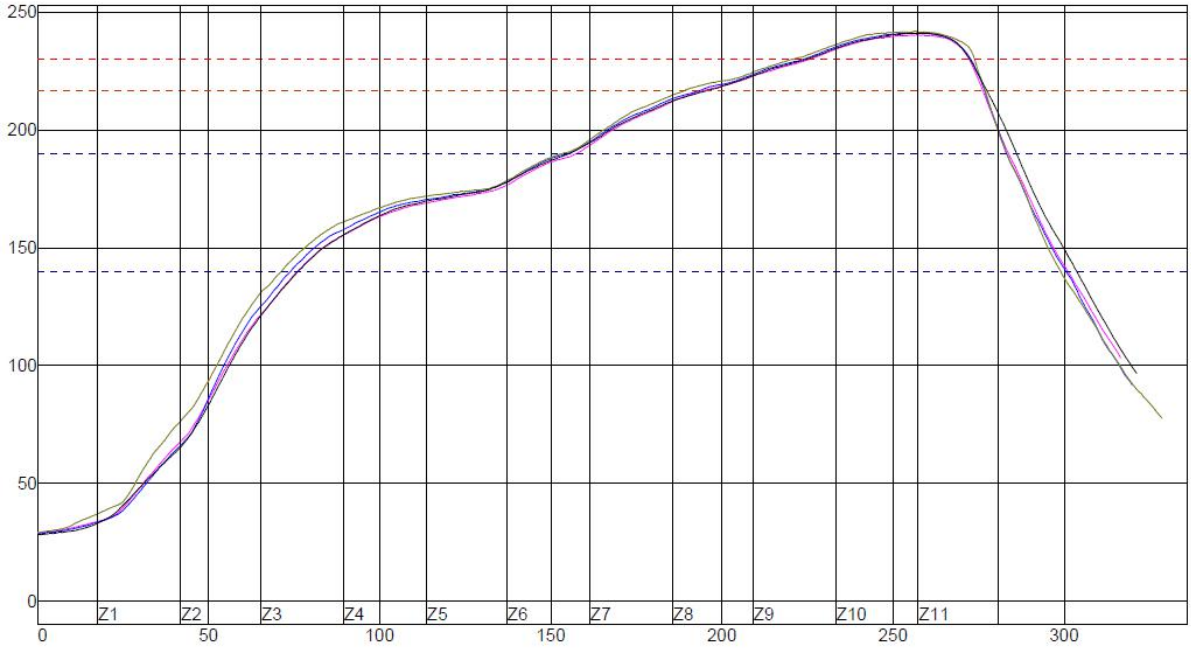

PWI = 48%	U10-1	T1-2	U3-3	U42-4	Temp. Difference
Preheat from 140–190°C					
	81.48	81.13	81.94	79.07	2.87
	–34%	–36%	–32%	–48%	
Melt-out Time/230°C					
	46.91	49.26	53.50	48.18	6.59
	-31%	-7%	35%	–18%	
Max Temp					
	240.40	241.34	241.84	241.32	1.44
	4%	13%	18%	13%	
Total Time/217°C					
	81.18	82.95	87.61	81.24	6.43
	-15%	-8%	10%	–15%	

Gradient1 (100–150°C)					
	1.88	1.91	1.87	1.86	0.05
	25%	28%	25%	24%	

Process limit:

Solder Paste		**Lead-free**	
Profile feature	Min.	Max.	Unit
Gradient1 (Target = 1.5) (100 °C–150 °C) (Time period = 20 s)	0	3	°C/S
Preheat time from 140 °C to 190 °C	70	105	S
Time maintained above 230 °C	40	60	S
Peak package body temperature	230	250	°C
Time maintained above 217 °C	60	110	S

Prelim

7. Labeling and Packaging

7.1. Labeling

Figure7-1 is a drawing showing a label for the IMQ6 module.

Figure 7-1. Label drawing (TBD)

7.2. Packaging

Tape-and-Reel Package

Modules are delivered in tape-and-reel based on MPQ (1000 pcs./reel).4 reel/carton.

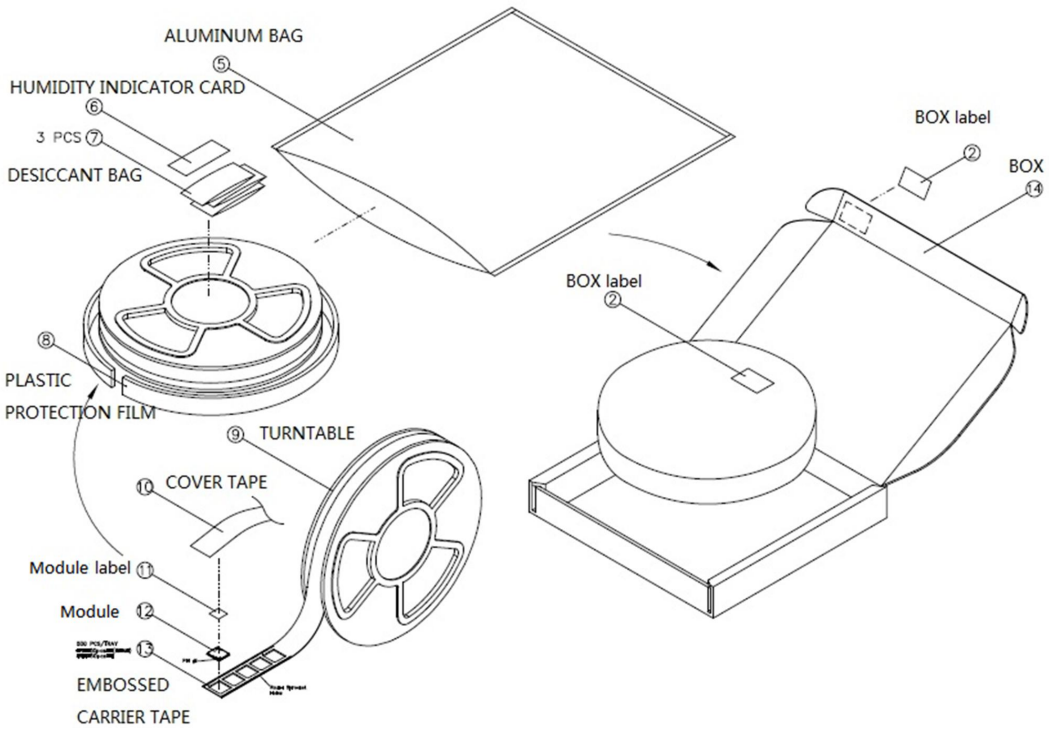

Figure 7-2. Packaging--tape

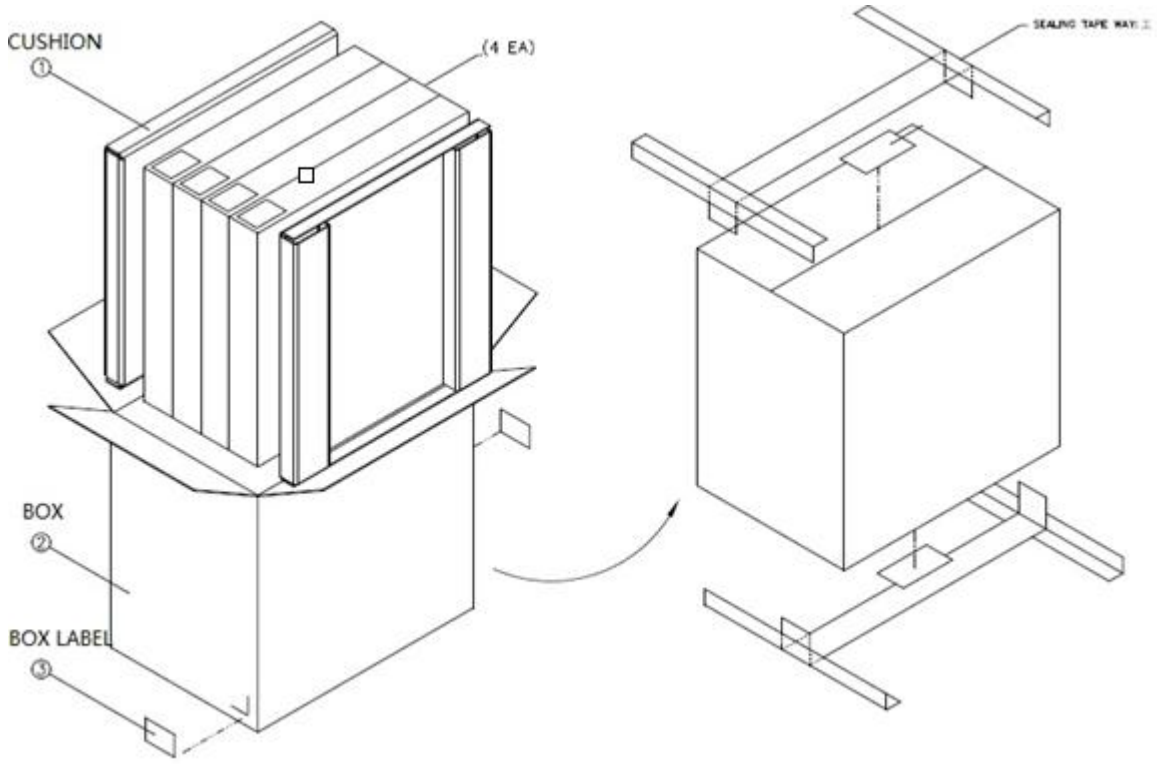

Figure 7-3. Packaging—reel

Single Package for Samples

50 pcs./box; no vacuum packaging; must be baked for at least eight hours at 85 °C before SMT.

Prelim

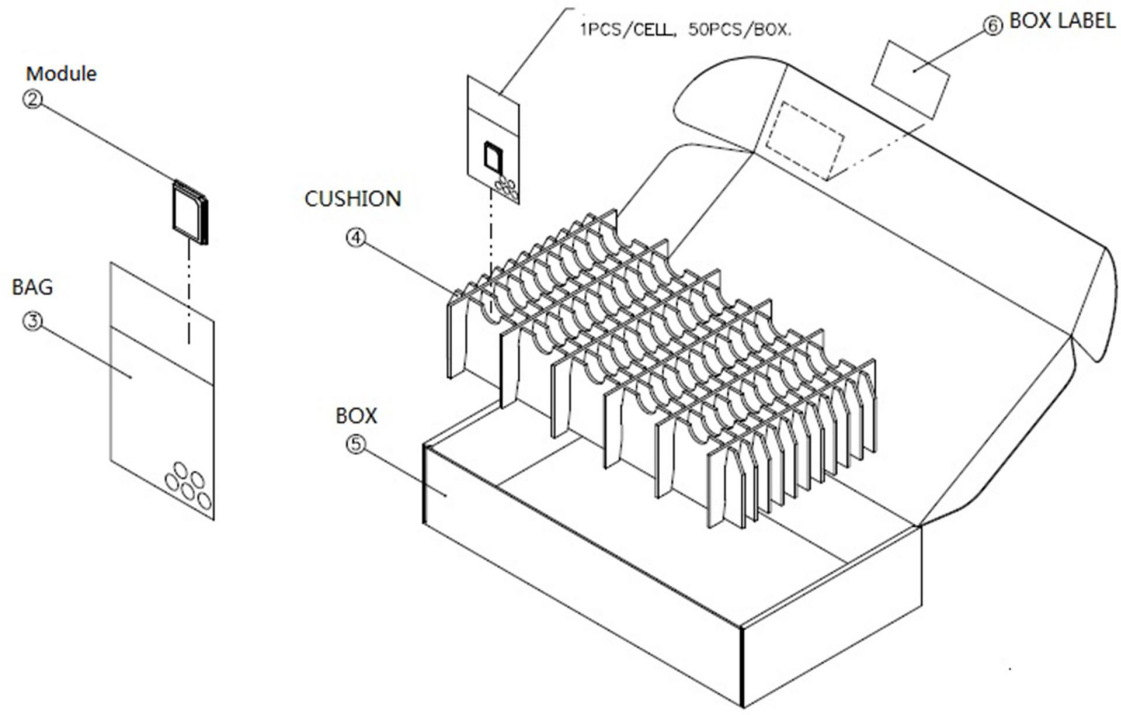

Figure 7-4. Packaging—carton

7.3. MSL level

The IMQ6 module has an MSL level of 3.

Prelim

8. Safety Recommendation

FEDERAL COMMUNICATIONS COMMISSION INTERFERENCE STATEMENT

This equipment has been tested and found to comply with the limits for a Class B digital device, pursuant to part 15 of the FCC Rules. These limits are designed to provide reasonable protection against harmful interference in a residential installation. This equipment generates, uses and can radiate radio frequency energy and, if not installed and used in accordance with the instructions, may cause harmful interference to radio communications. However, there is no guarantee that interference will not occur in a particular installation. If this equipment does cause harmful interference to radio or television reception, which can be determined by turning the equipment off and on, the user is encouraged to try to correct the interference by one or more of the following measures:

-Reorient or relocate the receiving antenna.

-Increase the separation between the equipment and receiver.

-Connect the equipment into an outlet on a circuit different from that to which the receiver is connected.

-Consult the dealer or an experienced radio/ TV technician for help.

This module is intended for OEM integrator. The OEM integrator is responsible for the compliance to all the rules that apply to the product into which this certified RF module is integrated. Additional testing and certification may be necessary when multiple modules are used.

USERS MANUAL OF THE END PRODUCT

In the users manual of the end product, the end user has to be informed to keep at least 20cm separation with the antenna while this end product is installed and operated.

The end user has to be informed that the FCC radio-frequency exposure guidelines for an uncontrolled environment can be satisfied.

The end user has to also be informed that any changes or modifications not expressly approved by the manufacturer could void the user's authority to operate this equipment.

Operation is subject to the following two conditions: (1) this device may not cause harmful interference and (2) this device must accept any interference received, including interference that may cause undesired operation.

Preliminary

LABEL OF THE END PRODUCT

The final end product must be labeled in a visible area with the following " Contains TX FCC ID: NKRIMQ6 ".

IC Statement:

CAN ICES-3 (B)/NMB-3 (B)

Canada, Industry Canada (IC) Notices

This device complies with Canada licence-exempt RSS standard(s).

Operation is subject to the following two conditions: (1) this device may not cause interference, and (2) this device must accept any interference, including interference that may cause undesired operation of the device.

Canada, avis d'Industry Canada (IC)

Cet appareil est conforme avec Industrie Canada exemptes de licence RSS standard(s).

Son fonctionnement est soumis aux deux conditions suivantes : (1) cet appareil ne doit pas causer d'interférence et (2) cet appareil doit accepter toute interférence, notamment les interférences qui peuvent affecter son fonctionnement.

Radio Frequency (RF) Exposure Information

This equipment complies with IC RSS-102 radiation exposure limits set forth for an uncontrolled environment. This equipment should be installed and operated with minimum distance 20cm between the radiator & your body.

Informations concernant l'exposition aux fréquences radio (RF)

Cet équipement est conforme aux limites d'exposition aux rayonnements IC établies pour un

Preliminary

environnement non contrôlé. Cet équipement doit être installé et utilisé avec un minimum de 20cm de distance entre la source de rayonnement et votre corps.

This radio transmitter IC: 4441A-IMQ6 has been approved by Industry Canada to operate with the antenna types listed below with the maximum permissible gain and required antenna impedance for each antenna type indicated. Antenna types not included in this list, having a gain greater than the maximum gain indicated for that type, are strictly prohibited for use with this device.

Cet émetteur radio IC: 4441A-IMQ6 a été approuvé par Industrie Canada pour fonctionner avec les types d'antennes énumérés ci-dessous avec le gain maximal admissible et impédance d'antenne requise pour chaque type d'antenne indiqué. Types d'antennes n'est pas inclus dans cette liste, ayant un gain supérieur au gain maximal indiqué pour ce type, sont strictement interdits pour une utilisation avec cet appareil.

Antenna List

No.	Manufacturer	Part No.	Antenna Type	Peak Gain (dBi)
1	WIESON	GY115HT0330-041	Dipole	3.2

Under Industry Canada regulations, this radio transmitter may only operate using an antenna of a type and maximum (or lesser) gain approved for the transmitter by Industry Canada. To reduce potential radio interference to other users, the antenna type and its gain should be so chosen that the equivalent isotropically radiated power (e.i.r.p.) is not more than that necessary for successful communication.

En vertu de la réglementation de l'industrie du Canada, cet émetteur de radio ne peuvent fonctionner en utilisant une antenne d'un type et maximum (ou moins) Gain approuvé pour l'émetteur par Industrie Canada. pour réduire risque d'interférence aux autres utilisateurs, le type d'antenne et son gain doivent être choisis de sorte que la puissance isotrope rayonnée équivalente (PIRE) ne dépasse pas ce qui est nécessaire pour la réussite de communication.

Preliminary

This module is intended for OEM integrator. The OEM integrator is responsible for the compliance to all the rules that apply to the product into which this certified RF module is integrated. Additional testing and certification may be necessary when multiple modules are used.

L'intégrateur OEM doit être conscient de ne pas fournir des informations à l'utilisateur final quant à la façon d'installer ou de supprimer ce module RF dans le manuel de l'utilisateur du produit final qui intègre ce module. Le manuel de l'utilisateur final doit inclure toutes les informations réglementaires requises et avertissements comme indiqué dans ce manuel.

USERS MANUAL OF THE END PRODUCT

In the users manual of the end product, the end user has to be informed to keep at least 20cm separation with the antenna while this end product is installed and operated.

The end user has to be informed that the IC radio-frequency exposure guidelines for an uncontrolled environment can be satisfied.

The end user has to also be informed that any changes or modifications not expressly approved by the manufacturer could void the user's authority to operate this equipment.

Operation is subject to the following two conditions: (1) this device may not cause harmful interference and (2) this device must accept any interference received, including interference that may cause undesired operation.

LABEL OF THE END PRODUCT

The final end product must be labeled in a visible area with the following " Contains TX IC: 4441A-IMQ6 ".

CE Statement:

Preliminary

This equipment should be installed and operated with a minimum distance of 20 cm between the radiator and your body.

Initialisms

Table 1. Initialisms and definitions

Abbreviation	Definition
AC	Alternating Current
DC	Direct Current
ETSI	European Telecommunications Standards Institute
GND	Ground
GPS	Global Positioning System
GNSS	Any single or combined satellite navigation system (GPS, GLONASS and combined GPS/GLONASS)
GPIO	General Purpose Input Output
I/O	Input/Output
IoT	Internet of Things
I2C	Inter-Integrated Circuit
LGA	Land Grid Array
LTE	Long Term Evolution
Mbps	Megabits per second
MIPS	Millions of Instructions Per Second
N/A	Not/Applicable

OS	Operating System
PCM	Pulse Code Modulation
SIM	Subscriber Identity Module
SMA	Surface Mount Antenna
SPI	Serial Peripheral Interface
UART	Universal Asynchronous Receiver-Transmitter
UIM	User Identity Module
USB	Universal Serial Bus
Vref	Voltage reference
WNC	Wistron NeWeb Corporation
RFU	Reserved For Future Use

Prelim