Wistron NeWeb Corp.

UMC-STD31BPN
Product Specification

ALL RIGHTS RESERVED
This is an unpublished work. No part of this document may be copied, photocopied, reproduced, translated, or reduced to any electronic or machine-readable form without the prior permission of Wistron NeWeb Corps.

Document author:	Cusp
Owner while current:	Roy
Retention period:	Until Next Release

本資料為啟碁科技股份有限公司專有之財產，非經書面許可，不准透露或使用本資料，亦不准複印，複製或轉變成其他形式使用。
The information contained herein is the exclusive property of WNC and shall not be distributed, reproduced, or disclosed in whole or in part without prior written permission from WNC.

Revision	Revision Date	Revised By	Description
0.6	2022/2/15	Roy	Page 3, Update band plan for variants. Page 6, Update current consumption. Page 30, Revise label information for C sample.

本資料為啟碁科技股份有限公司專有之財產，非經書面許可，不准透露或使用本資料，亦不准複印，複製或轉變成其他形式使用。
The information contained herein is the exclusive property of WNC and shall not be distributed, reproduced, or disclosed in whole or in part without prior written permission from WNC.

1 General features 5
1.1 Regional variant 5
1.2 Performance key features 5
1.3 Interface 6
1.3.1 Signal interface 6
1.3.2 GPIO 6
1.3.3 Antenna interface 6
1.3.4 Power input interface 6
1.3.5 Power output interface 7
1.4 Operation condition 7
1.5 Mechanical specification 7
2 Block diagram 8
2.1 UMC-MT2731R block diagram 8
2.2 Software stack 9
3 Board placement 9
3.1 Top side 9
3.2 Bottom side 10
3.3 Pin diagram 10
3.5 GPIO table 25
3.5.1 Alternate Function 25
3.5.2 Wake up/De-bounce 28
4 Mechanical design 31
4.1 Shielding case design 31
4.2 Label information 32
4.3 NAD land pattern 32
4.4 Stencil opening 33
4.5 Reflow profile 34
4.6 Moisture sensitivity level 35
4.7 ESD 35
4.8 Packaging 35
5 Thermal design 37
5.1 Thermal sensor 37
5.2 Software thermal mitigation 38
6 RF specification 39
6.1 UMC-MT2731R 39
6.1.1 Maximum output power 39
6.1.2 Sensitivity limit 40
7 Evaluation Kit 40
8 Design application notes 42
8.1 Power trace 42
8.2 Power ON/OFF and Reset 42

本資料為啟碁科技股份有限公司專有之財產，非經書面許可，不准透露或使用本資料，亦不准複印，複製或轉變成其他形式使用。
The information contained herein is the exclusive property of WNC and shall not be distributed, reproduced, or disclosed in whole or in part without prior written permission from WNC.

8.2.1 Power ON 42
8.2.2 Power OFF 42
8.2.3 Reset 42
8.3 USB2.0 43
8.4 USB2.0 OTG 43
8.5 I2C 43
8.6 RGMII 43
8.7 MSDC 44
8.7.1 Layout 44
8.7.2 MSDC interface 44
8.8 SIM 44
8.8.1 Layout 44
8.9 RF antenna port 44
8.9.1 Antenna detection 45
8.10 KPCOL0 46
8.11 IDDIG 46
8.12 WATCHDOG 46
8.13 SRCLKENA0 47
8.14 RTC_CLK 47
8.15 Thermal 47
9 Abbreviation 48
10. Warning statement 51
Federal Communication Commission Interference Statement: 51
Radiation Exposure Statement: 51
Industry Canada statement: 53

本資料為啟碁科技股份有限公司專有之財產，非經書面許可，不准透露或使用本資料，亦不准複印，複製或轉變成其他形式使用。
The information contained herein is the exclusive property of WNC and shall not be distributed, reproduced, or disclosed in whole or in part without prior written permission from WNC.

1 General features

UMC-STD31BP is the 254-pin contacting LGA type NAD(Network Access Device) suitable for automotive applications based on its LTE/WCDMA/GSM communication features. For the worldwide market, WNC has three regional variants that have dedicated RAT supporting band designed as below
NA for North America region
EU for Europe region

1.1 Regional variant

RAT\Variant	EU	NA
GSM/EDGE/GPRS	900/1800	850/1900
WCDMA	Not Support	Not Support
LTE Low Band	Band8, 20, 28	Band26(5), 12(17), 71
LTE Middle Band	Band1, 3	Band25(2), 66(4)
LTE High Band	Band7	Band7

1.2 Performance key features

Key Features\Variant	EU	NA
Model name	UMC-STD31BPE	UMC-STD31BPN
Modem	MTK/MT2731V/RO	MTK/MT2731V/RO
Power Management	MTK/MT6389V/AOAMT	MTK/MT6389V/AOAMT
RF IC	K/MT6177AW/AOC	K/MT6177AW/AOC
Primary Antenna	GSM/LTE; transmitting and receiving	GSM/LTE; transmitting and receiving
Diversity Antenna	LTE; receiving only	LTE; receiving only
Maximum Data Rate	LTE Category 6	LTE Category 6
LTE Downlink CA(Intra)	CA_1-1, CA_3-3 and CA_7-7	CA_2-2, CA_4-4 and CA_7-7
LTE Downlink CA(Inter)	Not Supported	Not Supported
LTE Uplink CA	Not Supported	Not Supported
GNSS L1	Not Supported	Not Supported
LTE Power Class	3	3

本資料為啟碁科技股份有限公司專有之財產，非經書面許可，不准透露或使用本資料，亦不准複印，複製或轉變成其他形式使用。
The information contained herein is the exclusive property of WNC and shall not be distributed, reproduced, or disclosed in whole or in part without prior written permission from WNC.

1.3 Interface

1.3.1 Signal interface

UMC-STD31BP has signal interfaces as showed as below table. Developer could use these interfaces to communicate with NAD or debugging

Interface	Amount	Description
PCIE	1 set	Support RC mode only
USB 2.0 OTG	1 set	support the device or the host mode
RGMII	1 set	Support GbE
Audio(analog)	2 sets	for the analog audio interface; consisting of two audio DACs with Mono data stream and two line-out drivers
UART	1 sets	2 sets with CTS/RTS pin
MSDC	1 sets	1 set with 8-bit data lines
JTAG	1 set	for the firmware upgrade and the debugging
SIM	1 sets	SIM interface
ADC	4 pins	ADC channel with 12-bit resolution

1.3.2 GPIO

Interface	Description
GPIO(1.8V)	37 pins
GPIO(3.3V)	18 pins

1.3.3 Antenna interface

Interface	Description
Primary Antenna	1 pin for LTE/WCDMA/GSM primary transmitting and receiving
Diversity Antenna	1 pin for LTE and WCDMA diversity receiving

1.3.4 Power input interface

Interface	Description
VSYS	2 pins. NAD main supply voltage source
VBUS	1 pin. 5.0V input for USB detection

本資料為啟碁科技股份有限公司專有之財產，非經書面許可，不准透露或使用本資料，亦不准複印，複製或轉變成其他形式使用。
The information contained herein is the exclusive property of WNC and shall not be distributed, reproduced, or disclosed in whole or in part without prior written permission from WNC.

1.3.5 Power output interface

Interface	Description
VEMC_PMU	1 pin. 3.0V output, max current 800mA. For eMMC
VIO33_PMU	1 pin. 3.3V output, max current 100mA. For I/O or sensors
VCN33_PMU	1 pin. 3.3V output, max current 70mA. For Connectivity
VIO18_PMU	1 pin. 1.8V output, max current 200mA. For I/O or sensors
VCN18_PMU	1 pin. 1.8V output, max current 450mA. For Connectivity
VSIM1_PMU	1 pin. 1.8V output, max current 140mA. As SIM1 supply-feed
VSIM2_PMU	1 pin. 1.8V output, max current 140mA.

1.4 Operation condition

tbc: the data will be updated after DVT tests of UMC-MT2731R ROW A-sample is completed

Parameter	Minimum	Typical	Maximum	Unit
Storage Temperature Range	-40	-	85	°C
3GPP RF Performance Temperature Range	-20	-	70	°C
Operating Temperature Range	-40	-	85	°C
Power Supply Voltage(VSYS)	3.8	4	4.2	V
ESD Voltage(Human Body Model)	-	-	2000	V
ESD Voltage(Charge Device Model)	-	-	500	V
Operation Humidity	0	-	95	%RH
Current Consumption				
Sleep(Airplane/Flight/Suspended mode)	-	2.905		mA
GSM standby 1.18 sec	-	3.708		mA
LTE FDD CDRX standby(10-MHz/320-ms)	-	3.559		mA
GSM talk 11-dBm; no DTX, P-GSM	-	162.916		mA
VoLTE FDD(40-ms DRX cycle/0-dBm)	-	255.434		mA
LTE Cat 4(150/50-Mbps, 5-dBm, Band7)	-	348.62		mA
LTE Cat 6(300/50-Mbps,5-dBm, Band7)	-	368		mA

1.5 Mechanical specification

Parameter	Min	Typ.	Max	Unit
Length	36.7	36.8	37.05	mm
Width	41.9	42	42.25	mm
Height(with shielding case)	2.93	3.23	3.53	mm
Weight(with shielding case)	9	10	11	G
Module co-planarity	0	-	100	um

本資料為啟碁科技股份有限公司專有之財產，非經書面許可，不准透露或使用本資料，亦不准複印，複製或轉變成其他形式使用。
The information contained herein is the exclusive property of WNC and shall not be distributed, reproduced, or disclosed in whole or in part without prior written permission from WNC.

2 Block diagram

2.1 UMC-STD31BP block diagram

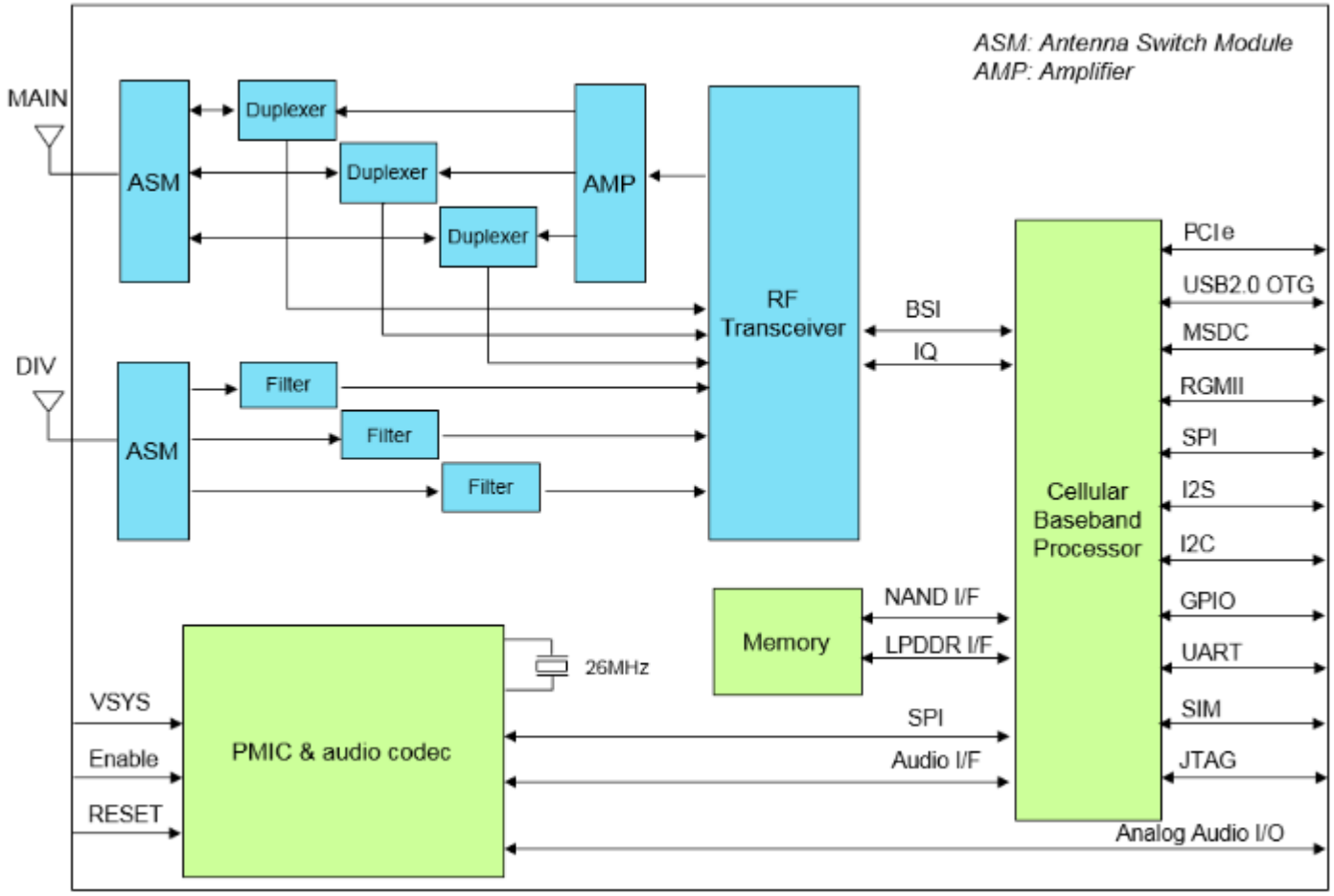

本資料為啟碁科技股份有限公司專有之財產，非經書面許可，不准透露或使用本資料，亦不准複印，複製或轉變成其他形式使用。
The information contained herein is the exclusive property of WNC and shall not be distributed, reproduced, or disclosed in whole or in part without prior written permission from WNC.

2.2 Software stack

Figure shows the software stack on MTK/MT2731 platform working on LINUX operation system which Kernel version is 4.14. For telephony, NAD supports not only voice calls but also SMS over CS and IMS

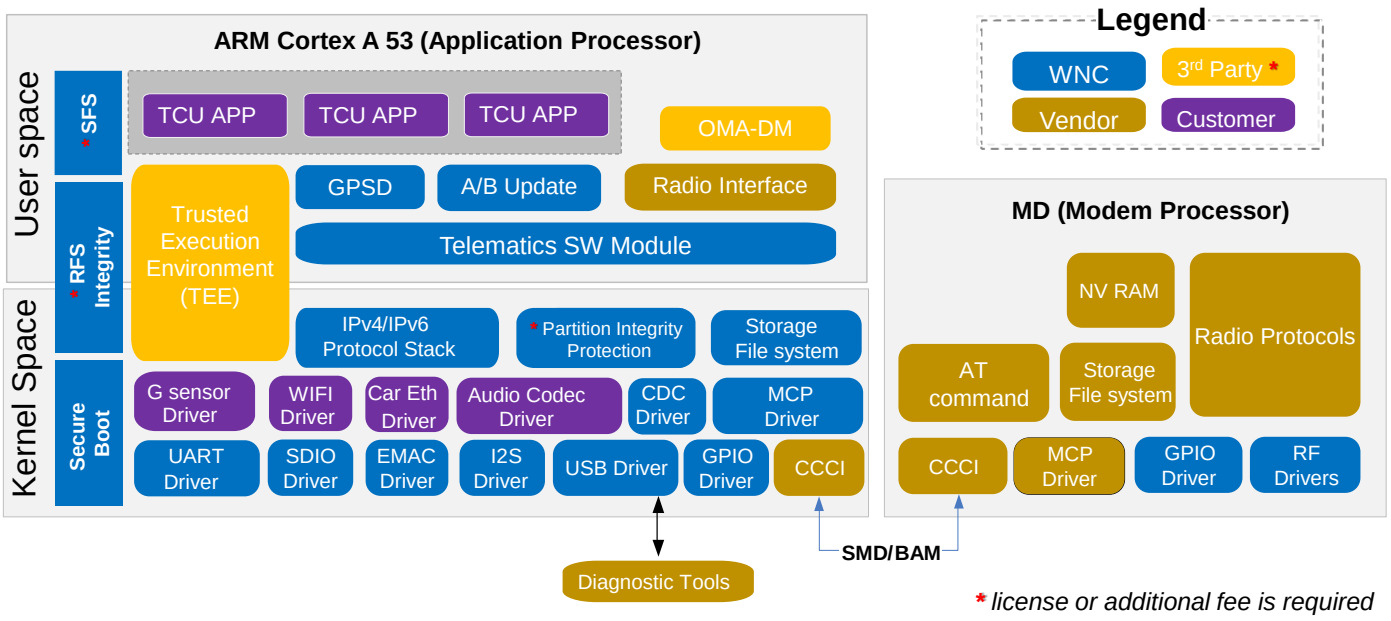

** license or additional fee is required*

3 Board placement

3.1 Top side

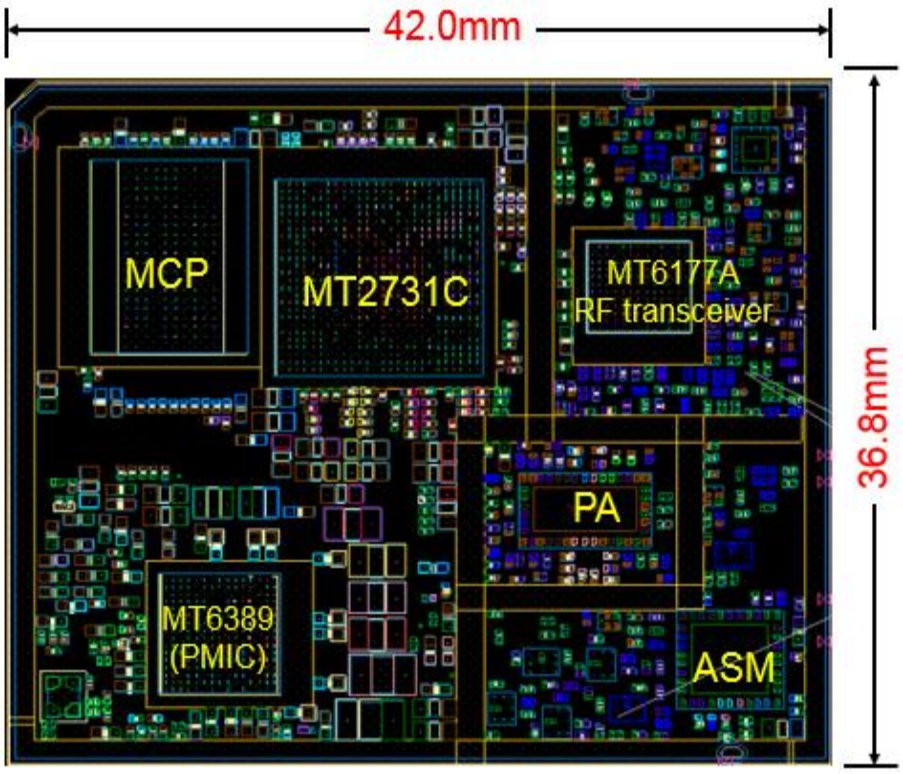

本資料為啟碁科技股份有限公司專有之財產，非經書面許可，不准透露或使用本資料，亦不准複印，複製或轉變成其他形式使用。
The information contained herein is the exclusive property of WNC and shall not be distributed, reproduced, or disclosed in whole or in part without prior written permission from WNC.

3.2 Bottom side

(Top to Bottom View)Round pads of LGA contacting

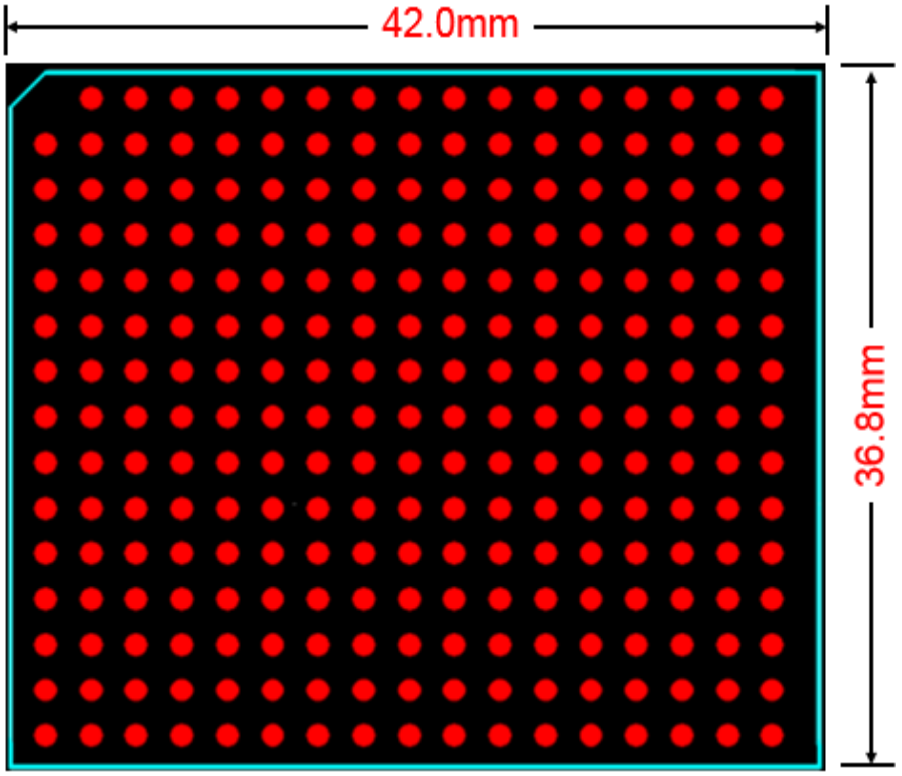

3.3 Pin diagram

Top to Bottom View(X-ray View)

本資料為啟碁科技股份有限公司專有之財產，非經書面許可，不准透露或使用本資料，亦不准複印，複製或轉變成其他形式使用。
The information contained herein is the exclusive property of WNC and shall not be distributed, reproduced, or disclosed in whole or in part without prior written permission from WNC.

	1	2	3	4	5	6	7	8	9	10	11	12	13	14	15	16	17	
A		GPIO46_1V8	GND	SS_USB_TXP	SS_USB_TXN	SS_USB_RXN	SS_USB_RXP	GND	USB_DM_P1	USB_DP_P1	KPCOL0	IDDIG	I2S0_MCK	GND	GPIO13_3V3	GPIO1_1V8	GPIO15_3V3	A
B	MSDC0_RSTB	MSDC0_DSL	GPIO45_1V8	GPIO44_1V8	NC	NC	GND	USB_DM_P0	USB_DP_P0	GND	GPIO43_3V3	GPIO28_1V8	URTS2	UCTS2	GPIO14_3V3	GND	GND	B
C	MSDC0_DAT7	MSDC0_CLK	GND	I2S0_DI	MSDC2_CLK	MSDC2_DAT0	MSDC2_DAT3	MSDC2_DSL	GND	PCM_OUT	PCM_CLK	PCM_SYNC	URXD2	UTXD2	SPI_CLK_3V3	GND	ANT_DRX	C
D	MSDC0_DAT5	MSDC0_CMD	UTXD0	URXD0	MSDC2_CMD	MSDC2_DAT2	GND	MSDC1_DAT1	MSDC1_DAT3	SDA0	PCM_IN	GND	GND	GND	GPIO0_1V8	GND	GND	D
E	MSDC0_DAT6	MSDC0_DAT2	GPIO18_1V8	GPIO19_1V8	MSDC2_DAT1	TEMP_URXD	TEMP_UTXD	MSDC1_CMD	MSDC1_DAT0	GND	SCL0	GND	GND	GND	GND	META_MODE	GPIO8_1V8	E
F	MSDC0_DAT0	MSDC0_DAT3	I2S0_BCK	I2S0_LRCK	I2S0_DO	AGPS_SYNC	GND	GND	MSDC1_DAT2	MSDC1_CLK	LTE_COEX_TX_1V8	LTE_COEX_RX_1V8	GND	GND	GND	SPI1_A_CS1A	SPI1_A_MO	F
G	GND	MSDC0_DAT1	MSDC0_DAT4	GND	GPIO132_3V3	GND	GND	GND	GPIO11_1V8	GPIO10_1V8	GND	GPIO2_1V8	GPIO9_1V8	GND	JTMS	JTRSTB	SPI1_A_MI	G
H	GPIO119_3V3	GPIO117_3V3	GPIO124_3V3	GPIO129_3V3	GPIO130_3V3	GND	SYSRSTB	GND	GPIO12_1V8	GPIO90_1V8	GND	GND	GND	JTDI	JTDO	JTCK	GND	H
J	GPIO118_3V3	GPIO127_3V3	GPIO116_3V3	GPIO128_3V3	GPIO133_3V3	GPIO123_3V3	GND	GND	GPIO88_1V8	GPIO87_1V8	GND	GND	GND	GND	GND	GND	GND	J
K	VEMC_PMU	GND	GND	GPIO122_3V3	GPIO126_3V3	GPIO121_3V3	GPIO131_3V3	GND	GND	GPIO89_1V8	GND	GND	GND	GND	GND	AUXADC_VIN2	GND	K
L	GND	VIO33_PMU	VSIM1_PMU	VBUS	GPIO125_3V3	GPIO120_3V3	GND	GPI146_3V3	GND	GND	GND	GND	GND	GND	GND	GND	GND	L
M	VCN33_PMU	VSIM2_PMU	VRTC28	GND	GND	GND	WATCHDOG	PMIC_STATUS_B	GND	GND	GND	GND	GND	GND	GND	GND	GND	M
N	VIO18_PMU	AUDIO_IN2_P	GND	GND	GND	GND	SRCLKENA0	GND	GND	SIM2_SIO	GND	UTXD1	GND	GND	GND	GND	ANT_PTRX	N
P	AUDIO_IN1_N	AUDIO_IN2_N	AUDIO_OUT2_N	AUDIO_OUT2_P	GND	PMIC_EN B	PMIC_RESET_B	GND	SIM2_SCLK	SIM2_SRST	URXD1	UCTS1	GND	GND	GND	GND	GND	P
Q	AUDIO_IN1_P	AUDIO_OUT1_N	AUDIO_OUT1_P	VCN18_PMU	GND	VSYS	VSYS	GND	SIM1_SIO	SIM1_SCLK	SIM1_SRST	URTS1	RTC_CLK	AUXADC_VIN4	AUXADC_VIN6	AUXADC_VIN8	GND	Q
	1	2	3	4	5	6	7	8	9	10	11	12	13	14	15	16	17	

本資料為啟碁科技股份有限公司專有之財產，非經書面許可，不准透露或使用本資料，亦不准複印，複製或轉變成其他形式使用。
The information contained herein is the exclusive property of WNC and shall not be distributed, reproduced, or disclosed in whole or in part without prior written permission from WNC.

3.4 Pin definition table

NC: No Connection
PD: Pull Down
PU: Pull Up

NOTE1 All unused pins should be assigned as “No Connection” on the application board
NOTE2 Internal pull-up/pull-up resistor of GPIO pins in MT2731
Type1 I/O：Internal resistance could be 3 options (10k-OHM, 50K-OHM, and 10K-OHM||50K-OHM) so far for GPIO30~36, GPIO59~64,GPIO110~115, GPIO134~145.
Type2 I/O：75K-OHM is a typical value (in the range of 40K-OHM~190K-OHM) for others I/O that cannot be configured to different resistance.

NOTE(*) In the specified software(Part#: 53tbc), NAD pin#L8 is no longer being a GPI pin as default and configured as ”MCU_RESET_B” to support following reset function
This pin is triggered high to close application software firstly, and then to do the reset of PMIC for rebooting NAD after the power-off/-on sequence
*GO1-GO55, Please read the table 3.5.1/3.5.2 (GO: Go through IO function)

NAD Pin#	Symbol Name	Power Domain	Voltage	Internal Pull State	MT2731 Pin-out	GPIO	Description
A2	PCIE_PERST_N	DVDD18	1.8V	PD	F22	GPIO46	PCIe
A3	GND				n/a		
A4	PCIE_LN0_TXP	AVDD18_PCIE	1.8V		D26		PCIe
A5	PCIE_LN0_TXN	AVDD18_PCIE	1.8V		D25		PCIe
A6	PCIE_LN0_RXN	AVDD18_PCIE	1.8V		G25		PCIe
A7	PCIE_LN0_RXP	AVDD18_PCIE	1.8V		G26		PCIe
A8	GND				n/a		
A9	NC				J25		
A10	NC				J24		
A11	KPCOL0	DVDD18	1.8V	PU	AD23	GPIO58	Pull this pin low to force NAD being USB Download Mode for the software upgrade

本資料為啟碁科技股份有限公司專有之財產，非經書面許可，不准透露或使用本資料，亦不准複印，複製或轉變成其他形式使用。
The information contained herein is the exclusive property of WNC and shall not be distributed, reproduced, or disclosed in whole or in part without prior written permission from WNC.

A12	IDDIG	DVDD18	1.8V	PD	P26	GPIO25	ID pin of USB 2.0 OTG interface
A13	GPIO24_1V8	DVDD18	1.8V	PD	N26	GPIO24	GO1
A14	GND				n/a		
A15	GPIO13_3V3	DVDD28	3.3V	PD	AA24	GPIO13	GO2
A16	GPIO1_1V8	DVDD18	1.8V	PD	M26	GPIO1	GO3
A17	GPIO15_3V3	DVDD28	3.3V	PD	AB24	GPIO15	GO4
B1	MSDC0_RSTB	DVDD18	1.8V	PU	G3	GPIO140	8-bits SDIO for eMMC
B2	MSDC0_DSL	DVDD18	1.8V	PD	F5	GPIO137	8-bits SDIO for eMMC
B3	PCIE_WAKE_N	DVDD18	1.8V	PD	G23	GPIO45	PCIe
B4	PCIE_CLKREQ_N	DVDD18	1.8V	PD	G22	GPIO44	PCIe
B5	PCIE_CLKN	AVDD18_PCIE	1.8V		E24		PCIe
B6	PCIE_CLKP	AVDD18_PCIE	1.8V		F24		PCIe
B7	GND				n/a		
B8	USB_DM_P0	AVDD33_USB	3.3V		K26		USB 2.0 OTG differential pair signal
B9	USB_DP_P0	AVDD33_USB	3.3V		K25		USB 2.0 OTG differential pair signal
B10	GND				n/a		
B11	GPIO43_3V3	DVDD28	3.3V	PD	Y24	GPIO43	GO5
B12	GPIO28_1V8	DVDD18	1.8V	PD	P25	GPIO28	GO6

本資料為啟碁科技股份有限公司專有之財產，非經書面許可，不准透露或使用本資料，亦不准複印，複製或轉變成其他形式使用。
The information contained herein is the exclusive property of WNC and shall not be distributed, reproduced, or disclosed in whole or in part without prior written permission from WNC.

B13	GPIO49_3V3	DVDD28	3.3V	PD	AA22	GPIO49	GO7
B14	GPIO47_3V3	DVDD28	3.3V	PD	AA23	GPIO47	GO8
B15	GPIO14_3V3	DVDD28	3.3V	PD	AB25	GPIO14	GO9
B16	GND				n/a		
B17	GND				n/a		
C1	MSDC0_DAT7	DVDD18	1.8V	PU	J2	GPIO136	8-bits SDIO for eMMC
C2	MSDC0_CLK	DVDD18	1.8V	PD	H6	GPIO138	8-bits SDIO for eMMC
C3	GND				n/a		
C4	GPIO22_1V8	DVDD18	1.8V	PD	N25	GPIO22	GO16
C5	GPIO31_1V8	DVDD18	1.8V	PD	R25	GPIO31	GO17
C6	GPIO36_1V8	DVDD18	1.8V	PD	U24	GPIO36	GO18
C7	GPIO33_1V8	DVDD18	1.8V	PD	V26	GPIO33	GO19
C8	GPIO30_1V8	DVDD18	1.8V	PD	R24	GPIO30	GO20
C9	GND				n/a		
C10	GPIO40_3V3	DVDD28	3.3V	PU	Y25	GPIO40	GO10
C11	GPIO37_3V3	DVDD28	3.3V	PU	Y23	GPIO37	GO11
C12	GPIO38_3V3	DVDD28	3.3V	PU	W23	GPIO38	GO12
C13	GPIO48_3V3	DVDD28	3.3V	PD	AC23	GPIO48	GO13
C14	GPIO50_3V3	DVDD28	3.3V	PD	AB22	GPIO50	GO14
C15	GPIO7_3V3	DVDD28	3.3V	PD	AC25	GPIO7	GO15
C16	GND				n/a		
C17	ANT_DRX						RF diversity antenna port

本資料為啟碁科技股份有限公司專有之財產，非經書面許可，不准透露或使用本資料，亦不准複印，複製或轉變成其他形式使用。
The information contained herein is the exclusive property of WNC and shall not be distributed, reproduced, or disclosed in whole or in part without prior written permission from WNC.

D1	MSDC0_DAT5	DVDD18	1.8V	PU	F2	GPIO135	8-bits SDIO for eMMC
D2	MSDC0_CMD	DVDD18	1.8V	PU	H5	GPIO142	8-bits SDIO for eMMC
D3	UTXD0(Debug)	DVDD18	1.8V	PU	L24	GPIO17	UART interface signal
D4	URXD0(Debug)	DVDD18	1.8V	PU	L23	GPIO16	UART interface signal
D5	GPIO32_1V8	DVDD18	1.8V	PD	T24	GPIO32	GO24
D6	GPIO34_1V8	DVDD18	1.8V	PD	V25	GPIO34	GO25
D7	GND				n/a		
D8	GPIO62_1V8	DVDD18	1.8V	PD	AC19	GPIO62	GO26
D9	GPIO60_1V8	DVDD18	1.8V	PD	AF20	GPIO60	GO27
D10	GPIO41_3V3	DVDD28	3.3V	PU	Y22	GPIO41	GO21
D11	GPIO39_3V3	DVDD28	3.3V	PU	Y26	GPIO39	GO22
D12	GND				n/a		
D13	GND				n/a		
D14	GND				n/a		
D15	GPIO0_1V8	DVDD18	1.8V	PU	M25	GPIO0	GO23
D16	GND				n/a		
D17	GND				n/a		
E1	MSDC0_DAT6	DVDD18	1.8V	PU	H1	GPIO134	8-bits SDIO for eMMC
E2	MSDC0_DAT2	DVDD18	1.8V	PU	H2	GPIO143	8-bits SDIO for eMMC
E3	GPIO18_1V8	DVDD18	1.8V	PD	M24	GPIO18	GO30
E4	GPIO19_1V8	DVDD18	1.8V	PD	M23	GPIO19	GO31
E5	GPIO35_1V8	DVDD18	1.8V	PD	U25	GPIO35	GO32
E6	GPIO27_1V8	DVDD18	1.8V	PD	T22	GPIO27	GO33

本資料為啟碁科技股份有限公司專有之財產，非經書面許可，不准透露或使用本資料，亦不准複印，複製或轉變成其他形式使用。
The information contained herein is the exclusive property of WNC and shall not be distributed, reproduced, or disclosed in whole or in part without prior written permission from WNC.

E7	GPIO26_1V8	DVDD18	1.8V	PD	T21	GPIO26	GO34
E8	GPIO59_1V8	DVDD18	1.8V	PD	AD20	GPIO59	GO35
E9	GPIO63_1V8	DVDD18	1.8V	PD	AD19	GPIO63	GO36
E10	GND				n/a		
E11	GPIO42_3V3	DVDD28	3.3V	PU	W21	GPIO42	GO28
E12	GND				n/a		
E13	GND				n/a		
E14	GND				n/a		
E15	GND				n/a		
E16	META_MODE	DVDD18	1.8V	PD	AE23	GPIO3	Before and after NAD power-on-booting/rebooting, pull this pin low to force NAD being META Mode for connecting META tool
E17	GPIO8_1V8	DVDD18	1.8V	PD	AF23	GPIO8	GO29
F1	MSDC0_DAT0	DVDD18	1.8V	PU	F1	GPIO141	8-bits SDIO for eMMC
F2	MSDC0_DAT3	DVDD18	1.8V	PU	F4	GPIO139	8-bits SDIO for eMMC
F3	GPIO20_1V8	DVDD18	1.8V	PD	P23	GPIO20	GO40
F4	GPIO21_1V8	DVDD18	1.8V	PD	N24	GPIO21	GO41
F5	GPIO23_1V8	DVDD18	1.8V	PD	N23	GPIO23	GO42
F6	AGPS_SYNC	DVDD18	1.8V	PD	R23	GPIO29	AGPS interface
F7	GND				n/a		
F8	GND				n/a		
F9	GPIO61_1V8	DVDD18	1.8V	PD	AE20	GPIO61	GO43
F10	GPIO64_1V8	DVDD18	1.8V	PD	AE19	GPIO64	GO37

本資料為啟碁科技股份有限公司專有之財產，非經書面許可，不准透露或使用本資料，亦不准複印，複製或轉變成其他形式使用。
The information contained herein is the exclusive property of WNC and shall not be distributed, reproduced, or disclosed in whole or in part without prior written permission from WNC.

F11	LTE_COEX_TX_1V8	DVDD18	1.8V	PD	V23	GPIO56	Reserved interface for IDC connection of WLAN IC
F12	LTE_COEX_RX_1V8	DVDD18	1.8V	PD	V22	GPIO57	Reserved interface for IDC connection of WLAN IC
F13	GND				n/a		
F14	GND				n/a		
F15	GND				n/a		
F16	GPIO6_3V3	DVDD28	3.3V	PD	AC26	GPIO6	GO38
F17	GPIO5_3V3	DVDD28	3.3V	PD	AD25	GPIO5	GO39
G1	GND				n/a		
G2	MSDC0_DAT1	DVDD18	1.8V	PU	G2	GPIO145	8-bits SDIO for eMMC
G3	MSDC0_DAT4	DVDD18	1.8V	PU	F3	GPIO144	8-bits SDIO for eMMC
G4	GND				n/a		
G5	GBE_COL	DVDD28	3.3V	PD	L2	GPIO132	GbE
G6	GND				n/a		
G7	GND				n/a		
G8	GND				n/a		
G9	MCU_WU_NAD	DVDD18	1.8V	PD	AB2	GPIO11	MCU wake up NAD from sleep mode
G10	GPIO10_1V8	DVDD18	1.8V	PD	AC4	GPIO10	GO44
G11	GND				n/a		
G12	GPIO2_1V8	DVDD18	1.8V	PD	V21	GPIO2	GO45
G13	NAD_WU_MCU	DVDD18	1.8V	PD	AE18	GPIO9	NAD wake up MCU,when got SMS/Call
G14	GND				n/a		
G15	JTMS	DVDD18	1.8V	PD	AE25	GPIO51	JTAG debugging interface
G16	JTRSTB	DVDD18	1.8V	PD	AC24	GPIO55	JTAG debugging interface

本資料為啟碁科技股份有限公司專有之財產，非經書面許可，不准透露或使用本資料，亦不准複印，複製或轉變成其他形式使用。
The information contained herein is the exclusive property of WNC and shall not be distributed, reproduced, or disclosed in whole or in part without prior written permission from WNC.

G17	GPIO4_3V3	DVDD28	3.3V	PD	AD26	GPIO4	GO46
H1	GBE_TXD0	DVDD28	3.3V	PD	N5	GPIO119	GbE
H2	GBE_TXD2	DVDD28	3.3V	PD	M4	GPIO117	GbE
H3	GBE_TXC	DVDD28	3.3V	PD	L4	GPIO124	GbE
H4	GBE_MDIO	DVDD28	3.3V	PD	L3	GPIO129	GbE
H5	GBE_TXER	DVDD28	3.3V	PD	M2	GPIO130	GbE
H6	GND				n/a		
H7	SYSRSTB		0 to 1.98V		PMIC		For internal debugging
H8	GND				n/a		
H9	GPIO12_1V8	DVDD18	1.8V	PD	Y5	GPIO12	GO48
H10	GPIO90_1V8	DVDD18	1.8V	PD	AE4	GPIO90	GO47
H11	GND				n/a		
H12	GND				n/a		
H13	GND				n/a		
H14	JTDI	DVDD18	1.8V	PD	AE24	GPIO53	JTAG debugging interface
H15	JTDO	DVDD18	1.8V	PD	AF24	GPIO54	JTAG debugging interface
H16	JTCK	DVDD18	1.8V	PD	AD24	GPIO52	JTAG debugging interface
H17	GND				n/a		
J1	GBE_TXD1	DVDD28	3.3V	PD	N4	GPIO118	GbE
J2	GBE_TXEN	DVDD28	3.3V	PD	N3	GPIO127	GbE
J3	GBE_TXD3	DVDD28	3.3V	PD	M1	GPIO116	GbE
J4	GBE_MDC	DVDD28	3.3V	PD	K3	GPIO128	GbE
J5	GBE_INTR	DVDD28	3.3V	PD	K2	GPIO133	GbE
J6	GBE_RXD0	DVDD28	3.3V	PD	P1	GPIO123	GbE
J7	GND				n/a		

本資料為啟碁科技股份有限公司專有之財產，非經書面許可，不准透露或使用本資料，亦不准複印，複製或轉變成其他形式使用。
The information contained herein is the exclusive property of WNC and shall not be distributed, reproduced, or disclosed in whole or in part without prior written permission from WNC.

J8	GND				n/a		
J9	GPIO88_1V8	DVDD18	1.8V	PD	AB5	GPIO88	GO50
J10	GPIO87_1V8	DVDD18	1.8V	PD	AB6	GPIO87	GO49
J11	GND				n/a		
J12	GND				n/a		
J13	GND				n/a		
J14	GND				n/a		
J15	GND				n/a		
J16	GND				n/a		
J17	GND				n/a		
K1	VEMC_PMU		3.0V		PMIC		3.0-Voltage source of the external eMMC; the maximum supply current is 800mA
K2	GND				n/a		
K3	GND				n/a		
K4	GBE_RXD1	DVDD28	3.3V	PD	P2	GPIO122	GbE
K5	GBE_RXDV	DVDD28	3.3V	PD	P3	GPIO126	GbE
K6	GBE_RXD2	DVDD28	3.3V	PD	R2	GPIO121	GbE
K7	GBE_RXER	DVDD28	3.3V	PD	R3	GPIO131	GbE
K8	GND				n/a		
K9	GND				n/a		
K10	GPIO89_1V8	DVDD18	1.8V	PD	AF4	GPIO89	GO51
K11	GND				n/a		
K12	GND				n/a		
K13	GND				n/a		
K14	GND				n/a		
K15	GND				n/a		
K16	AUXADC_VIN2		0 to 1.98V		PMIC		PMIC ADC input with 12-bit A-to-D resolution

本資料為啟碁科技股份有限公司專有之財產，非經書面許可，不准透露或使用本資料，亦不准複印，複製或轉變成其他形式使用。
The information contained herein is the exclusive property of WNC and shall not be distributed, reproduced, or disclosed in whole or in part without prior written permission from WNC.

K17	GND				n/a		
L1	GND				n/a		
L2	VIO33_PMU		3.3V		PMIC		3.3-Voltage output source; the maximum supply current is 100-mA
L3	VSIM1_PMU		1.8V		PMIC		1.8-Volatge source of SIM1; the maximum supply current is 140-mA
L4	VBUS				PMIC		PMIC input pin for USB detection. In Sleep Mode, VBUS should be disconnected with NAD
L5	GBE_RXC	DVDD28	3.3V	PD	P5	GPIO125	GbE
L6	GBE_RXD3	DVDD28	3.3V	PD	R4	GPIO120	GbE
L7	GND				n/a		
L8	MCU_RESET_B	DVDD28	3.3V	PD	T3	GPIO146	This pin only offers the **input** function and is not able to be configured as the output pin
L8*	MCU_RESET_B	DVDD28	3.3V	PD	T3	GPIO146	This pin is triggered low to close application software firstly, and then to do the reset of PMIC for rebooting NAD after the power-off/-on sequence
L9	GND				n/a		
L10	GND				n/a		
L11	GND				n/a		
L12	GND				n/a		
L13	GND				n/a		
L14	GND				n/a		
L15	GND				n/a		
L16	GND				n/a		
L17	GND				n/a		

本資料為啟碁科技股份有限公司專有之財產，非經書面許可，不准透露或使用本資料，亦不准複印，複製或轉變成其他形式使用。
The information contained herein is the exclusive property of WNC and shall not be distributed, reproduced, or disclosed in whole or in part without prior written permission from WNC.

M1	VCN33_PMU		3.3V		PMIC		3.3-Voltage output source reserved for MT6630; the maximum supply current is 70-mA
M2	VSIM2_PMU		1.8V		PMIC		1.8-Volatge source of SIM2; the maximum supply current is 140-mA
M3	VRTC28		2.8V		PMIC		2.8-Voltage source of RTC; the maximum supply current is 2-mA
M4	GND				n/a		
M5	GND				n/a		
M6	GND				n/a		
M7	WATCHDOG	DVDD18	1.8V	PU	AD4	GPIO92	WATCHDOG trigger signal generated from MT2731
M8	PMIC_STATUS_B		0 to 5V		PMIC		When NAD system completed the booting up, PMIC will pull this pin low not only to inform MT2731 that PMIC is ready, but also as the outgoing status pin reporting NAD booting is ended.This pin would be also connected to VSYS with the external pull-up resistor of 100K-OHM
M9	GND				n/a		
M10	GND				n/a		
M11	GND				n/a		
M12	GND				n/a		
M13	GND				n/a		
M14	GND				n/a		
M15	GND				n/a		
M16	GND				n/a		
M17	GND				n/a		

本資料為啟碁科技股份有限公司專有之財產，非經書面許可，不准透露或使用本資料，亦不准複印，複製或轉變成其他形式使用。
The information contained herein is the exclusive property of WNC and shall not be distributed, reproduced, or disclosed in whole or in part without prior written permission from WNC.

N1	VIO18_PMU		1.8V		PMIC		1.8V output source; the maximum supply current is 200-mA
N2	AUDIO_IN2_P		-1.5 to 1.5V		PMIC		Analog AUDIO Channel2 differential input pair(P/N); the minimum impedance loading at input is 7K-OHM
N3	GND				n/a		
N4	GND				n/a		
N5	GND				n/a		
N6	GND				n/a		
N7	SRCLKENA0	DVDD18	1.8V	PU	AA1	GPIO104	NAD status indicator; the state of HIGH for Normal Mode, as well as LOW for Sleep/Low Power Mode
N8	GND				n/a		
N9	GND				n/a		
N10	SIM2_SIO	DVDD28_SIM2	3.3V	PU	U1	GPIO110	SIM2 interface signal
N11	GND				n/a		
N12	GPIO93_1V8	DVDD18	1.8V	PD	AE3	GPIO93	GO52
N13	GND				n/a		
N14	GND				n/a		
N15	GND				n/a		
N16	GND				n/a		
N17	ANT_PTRX						RF primary antenna port
P1	AUDIO_IN1_N		-1.5 to 1.5V		PMIC		Analog AUDIO Channel1 differential input pair(P/N); the minimum impedance loading at input is 7K-OHM

本資料為啟碁科技股份有限公司專有之財產，非經書面許可，不准透露或使用本資料，亦不准複印，複製或轉變成其他形式使用。
The information contained herein is the exclusive property of WNC and shall not be distributed, reproduced, or disclosed in whole or in part without prior written permission from WNC.

P2	AUDIO_IN2_N		-1.5 to 1.5V		PMIC		Analog AUDIO Channel2 differential input pair(P/N); the minimum impedance loading at input is 7K-OHM
P3	AUDIO_OUT2_N		-1.98V to 1.98V		PMIC		Analog AUDIO Channel2 differential output pair(P/N); the output loading is 10K-OHM w/ 1.58Vrms
P4	AUDIO_OUT2_P		-1.98V to 1.98V		PMIC		Analog AUDIO Channel2 differential output pair(P/N); the output loading is 10K-OHM w/ 1.58Vrms
P5	GND				PMIC		
P6	PMIC_ENB		0 to 5V		PMIC		Pull this pin low to power NAD on
P7	PMIC_RESET_B		0 to 5V		PMIC		Hardware reset, to pull this pin low to trigger the reset of PMIC for rebooting NAD after the power-off/-on sequence
P8	GND				n/a		
P9	SIM2_SCLK	DVDD28_SIM2	3.3V	PD	U2	GPIO112	SIM2 interface signal
P10	SIM2_SRST	DVDD28_SIM2	3.3V	PD	V2	GPIO111	SIM2 interface signal
P11	GPIO94_1V8	DVDD18	1.8V	PD	AF2	GPIO94	GO53
P12	GPIO95_1V8	DVDD18	1.8V	PD	AF3	GPIO95	GO54
P13	GND				n/a		
P14	GND				n/a		
P15	GND				n/a		
P16	GND				n/a		
P17	GND				n/a		

本資料為啟碁科技股份有限公司專有之財產，非經書面許可，不准透露或使用本資料，亦不准複印，複製或轉變成其他形式使用。
The information contained herein is the exclusive property of WNC and shall not be distributed, reproduced, or disclosed in whole or in part without prior written permission from WNC.

Q1	AUDIO_IN1_P		-1.5 to 1.5V		PMIC		Analog AUDIO Channel1 differential input pair(P/N); the minimum impedance loading at input is 7K-OHM
Q2	AUDIO_OUT1_N		-1.98V to 1.98V		PMIC		Analog AUDIO Channel1 differential output pair(P/N); the output loading is 10K-OHM w/ 1.58Vrms
Q3	AUDIO_OUT1_P		-1.98V to 1.98V		PMIC		Analog AUDIO Channel1 differential output pair(P/N); the output loading is 10K-OHM w/ 1.58Vrms
Q4	VCN18_PMU		1.8V		PMIC		1.8V output source reserved for MT6630; the maximum supply current is 450-mA
Q5	GND				n/a		
Q6	VSYS		4V		PMIC		System supply-feed power of NAD
Q7	VSYS		4V		PMIC		
Q8	GND				n/a		
Q9	SIM1_SIO	DVDD28_SIM1	3.3V	PU	U4	GPIO113	SIM1 interface signal
Q10	SIM1_SCLK	DVDD28_SIM1	3.3V	PD	V4	GPIO115	SIM1 interface signal
Q11	SIM1_SRST	DVDD28_SIM1	3.3V	PD	V3	GPIO114	SIM1 interface signal
Q12	GPIO96_1V8	DVDD18	1.8V	PD	AE2	GPIO96	GO55
Q13	RTC_CLK		0 to 1.98V		PMIC		32.768-KHz clock signal generated from PMIC
Q14	AUXADC_VIN4		0 to 1.98V		PMIC		PMIC ADC input with 12-bit A-to-D resolution

本資料為啟碁科技股份有限公司專有之財產，非經書面許可，不准透露或使用本資料，亦不准複印，複製或轉變成其他形式使用。
The information contained herein is the exclusive property of WNC and shall not be distributed, reproduced, or disclosed in whole or in part without prior written permission from WNC.

Q15	AUXADC_VIN6		0 to 1.98V		PMIC		PMIC ADC input with 12-bit A-to-D resolution
Q16	AUXADC_VIN8		0 to 1.98V		PMIC		PMIC ADC input with 12-bit A-to-D resolution
Q17	GND				n/a		

3.5 GPIO table

3.5.1 Alternate Function

Table below shows available GPIO pins can be set into different function,customer can choose related function according to the table. Before implementing them into real design, need to confirm with WNC.

I：input IO pad. O：output IO pad. B: bidirectional IO pad(Input and output).

Index	Symbol Name	GPIO	Power Domain	Voltage	MT2731 Pin-out	Description
GO1	B:GPIO24	EINT24	DVDD18_IOLM	1.8V	N26	O:I2S0_MCK
GO2	B:GPIO13	EINT13	DVDD28_IOTCU	3.3V	AA24	GPIO13_3V3/O:I2S4_LRCK/I0:SPI2_A_MI
GO3	B:GPIO1	EINT1	DVDD18_IOLM	1.8V	M26	GPIO1_1V8
GO4	B:GPIO15	EINT15	DVDD28_IOTCU	3.3V	AB24	GPIO15_3V3/O:I2S4_BCK/O:SPI2_A_MO/I1:URXD5
GO5	B:GPIO43	EINT43	DVDD28_IOAUD	3.3V	Y24	GPIO43_3V3/O:I2S4_MCK/O:SPI2_A_CS2A
GO6	B:GPIO28	EINT28	DVDD18_IOLM	1.8V	P25	GPIO28_1V8
GO7	B:GPIO49	EINT49	DVDD28_IOTCU	3.3V	AA22	O:URTS2/O:SPI0_A_CLK
GO8	B:GPIO47	EINT47	DVDD28_IOTCU	3.3V	AA23	I1:UCTS2/O:SPI0_A_CS0A
GO9	B:GPIO14	EINT14	DVDD28_IOTCU	3.3V	AB25	GPIO14_3V3/I0:I2S4_DI/O:SPI2_A_CLK/O:UTXD5
GO10	B:GPIO40	EINT40	DVDD28_IOAUD	3.3V	Y25	O:PCM1_DO0/B1:SCL2/I1:URXD5
GO11	B:GPIO37	EINT37	DVDD28_IOAUD	3.3V	Y23	B0:PCM1_CLK/B1:SDA1/O:UTXD4/O:SPI2_A_CS2B

本資料為啟碁科技股份有限公司專有之財產，非經書面許可，不准透露或使用本資料，亦不准複印，複製或轉變成其他形式使用。
The information contained herein is the exclusive property of WNC and shall not be distributed, reproduced, or disclosed in whole or in part without prior written permission from WNC.

GO12	B:GPIO38	EINT38	DVDD28_IOAUD	3.3V	W23	B0:PCM1_SYNC/B1:SCL1/I1:URXD4/O:SPI2_A_CS2C
GO13	B:GPIO48	EINT48	DVDD28_IOTCU	3.3V	AC23	I1:URXD2/I0:SPI0_A_MI
GO14	B:GPIO50	EINT50	DVDD28_IOTCU	3.3V	AB22	O:UTXD2/O:SPI0_A_MO
GO15	B:GPIO7	EINT7	DVDD28_IOTCU	3.3V	AC25	O:SPI1_A_CLK/B1:SCL4
GO16	B:GPIO22	EINT22	DVDD18_IOLM	1.8V	N25	I0:I2S0_DI/I0:PCM1_DI
GO17	B:GPIO31	EINT31	DVDD18_IOLB	1.8V	R25	B1:MSDC2_CLK/O:URTS3
GO18	B:GPIO36	EINT36	DVDD18_IOLB	1.8V	U24	B1:MSDC2_DAT0/O:I2S0_DO
GO19	B:GPIO33	EINT33	DVDD18_IOLB	1.8V	V26	B1:MSDC2_DAT3/B0:I2S0_BCK
GO20	B:GPIO30	EINT30	DVDD18_IOLM	1.8V	R24	I0:MSDC2_DSL/I1:UCTS3
GO21	B:GPIO41	EINT41	DVDD28_IOAUD	3.3V	Y22	B1:SDA0
GO22	B:GPIO39	EINT39	DVDD28_IOAUD	3.3V	Y26	I0:PCM1_DI/B1:SDA2/O:UTXD5
GO23	B:GPIO0	EINT0	DVDD18_IOLM	1.8V	M25	GPIO0_1V8
GO24	B:GPIO32	EINT32	DVDD18_IOLB	1.8V	T24	B1:MSDC2_CMD/O:I2S0_MCK
GO25	B:GPIO34	EINT34	DVDD18_IOLB	1.8V	V25	B1:MSDC2_DAT2/B0:I2S0_LRCK
GO26	B:GPIO62	EINT62	DVDD18_IOBL	1.8V	AC19	B1:MSDC1_DAT1
GO27	B:GPIO60	EINT60	DVDD18_IOBL	1.8V	AF20	B1:MSDC1_DAT3
GO28	B:GPIO42	EINT42	DVDD28_IOAUD	3.3V	W21	B1:SCL0
GO29	B:GPIO8	EINT8	DVDD18_IOBL	1.8V	AF23	GPIO8_1V8
GO30	B:GPIO18	EINT18	DVDD18_IOLM	1.8V	M24	GPIO18_1V8/I1:URXD1/O:UTXD3

本資料為啟碁科技股份有限公司專有之財產，非經書面許可，不准透露或使用本資料，亦不准複印，複製或轉變成其他形式使用。
The information contained herein is the exclusive property of WNC and shall not be distributed, reproduced, or disclosed in whole or in part without prior written permission from WNC.

GO31	B:GPIO19	EINT19	DVDD18_IOLM	1.8V	M23	GPIO19_1V8/O:UTXD1/I1:URXD3
GO32	B:GPIO35	EINT35	DVDD18_IOLB	1.8V	U25	B1:MSDC2_DAT1/I0:I2S0_DI
GO33	B:GPIO27	EINT27	DVDD18_IOLM	1.8V	T22	I1:URXD6
GO34	B:GPIO26	EINT26	DVDD18_IOLM	1.8V	T21	O:UTXD6
GO35	B:GPIO59	EINT59	DVDD18_IOBL	1.8V	AD20	B1:MSDC1_CMD
GO36	B:GPIO63	EINT63	DVDD18_IOBL	1.8V	AD19	B1:MSDC1_DAT0
GO37	B:GPIO64	EINT64	DVDD18_IOBL	1.8V	AE19	B1:MSDC1_CLK
GO38	B:GPIO6	EINT6	DVDD28_IOTCU	3.3V	AC26	O:SPI1_A_CS1A/B1:SDA4
GO39	B:GPIO5	EINT5	DVDD28_IOTCU	3.3V	AD25	O:SPI1_A_MO/B1:SCL3
GO40	B:GPIO20	EINT20	DVDD18_IOLM	1.8V	P23	B0:I2S0_BCK/B0:PCM1_SYNC
GO41	B:GPIO21	EINT21	DVDD18_IOLM	1.8V	N24	B0:I2S0_LRCK/B0:PCM1_CLK
GO42	B:GPIO23	EINT23	DVDD18_IOLM	1.8V	N23	O:I2S0_DO/O:PCM1_DO0
GO43	B:GPIO61	EINT61	DVDD18_IOBL	1.8V	AE20	B1:MSDC1_DAT2
GO44	B:GPIO10	EINT10	DVDD18_IORB	1.8V	AC4	GPIO10_1V8
GO45	B:GPIO2	EINT2	DVDD18_IOLB	1.8V	V21	GPIO2_1V8
GO46	B:GPIO4	EINT4	DVDD28_IOTCU	3.3V	AD26	I0:SPI1_A_MI/B1:SDA3
GO47	B:GPIO90	EINT90	DVDD18_IOBR	1.8V	AE4	GPIO90_1V8/O:PWM1/O:I2S5_DO/B1:SCL1
GO48	B:GPIO12	EINT12	DVDD18_IORT	1.8V	Y5	GPIO12_1V8
GO49	B:GPIO87	EINT87	DVDD18_IOBR	1.8V	AB6	GPIO87_1V8/O:I2S5_BCK/I1:UCTS2
GO50	B:GPIO88	EINT88	DVDD18_IOBR	1.8V	AB5	GPIO88_1V8/O:I2S5_LRCK/O:URTS2

本資料為啟碁科技股份有限公司專有之財產，非經書面許可，不准透露或使用本資料，亦不准複印，複製或轉變成其他形式使用。
The information contained herein is the exclusive property of WNC and shall not be distributed, reproduced, or disclosed in whole or in part without prior written permission from WNC.

GO51	B:GPIO89	EINT89	DVDD18_IOBR	1.8V	AF4	GPIO89_1V8/O:PWM0/O:I2S5_MCK/B1:SDA1/O:UTXD2
GO52	B:GPIO93	EINT93	DVDD18_IORB	1.8V	AE3	O:UTXD1/O:SPI1_B_CS1A
GO53	B:GPIO94	EINT94	DVDD18_IORB	1.8V	AF2	I1:URXD1/O:SPI1_B_CLK
GO54	B:GPIO95	EINT95	DVDD18_IORB	1.8V	AF3	I1:UCTS1/I0:SPI1_B_MI
GO55	B:GPIO96	EINT96	DVDD18_IORB	1.8V	AE2	O:URTS1/O:SPI1_B_MO/

3.5.2 Wake up/De-bounce

Table below shows available GPIO pins in the default software setting and internally pulled-down in the device. 1.8V GPIO pins support the interrupt to wake NAD system up, and EINT0 to 15 also supports the hardware de-bounce to filter the mechanical bounce noise.

Index	Symbol Name	GPIO	Power Domain	Voltage	MT2731 Pin-out	Description
GO1	B:GPIO24	EINT24	DVDD18_IOLM	1.8V	N26	Wake up
GO2	B:GPIO13	EINT13	DVDD28_IOTCU	3.3V	AA24	Wake up/ Hardware De-bounce
GO3	B:GPIO1	EINT1	DVDD18_IOLM	1.8V	M26	Wake up/ Hardware De-bounce
GO4	B:GPIO15	EINT15	DVDD28_IOTCU	3.3V	AB24	Wake up/ Hardware De-bounce
GO5	B:GPIO43	EINT43	DVDD28_IOAUD	3.3V	Y24	Wake up
GO6	B:GPIO28	EINT28	DVDD18_IOLM	1.8V	P25	Wake up
GO7	B:GPIO49	EINT49	DVDD28_IOTCU	3.3V	AA22	Wake up
GO8	B:GPIO47	EINT47	DVDD28_IOTCU	3.3V	AA23	Wake up
GO9	B:GPIO14	EINT14	DVDD28_IOTCU	3.3V	AB25	Wake up
GO10	B:GPIO40	EINT40	DVDD28_IOAUD	3.3V	Y25	Wake up
GO11	B:GPIO37	EINT37	DVDD28_IOAUD	3.3V	Y23	Wake up
GO12	B:GPIO38	EINT38	DVDD28_IOAUD	3.3V	W23	Wake up
GO13	B:GPIO48	EINT48	DVDD28_IOTCU	3.3V	AC23	Wake up
GO14	B:GPIO50	EINT50	DVDD28_IOTCU	3.3V	AB22	Wake up
GO15	B:GPIO7	EINT7	DVDD28_IOTCU	3.3V	AC25	Wake up/ Hardware De-bounce

本資料為啟碁科技股份有限公司專有之財產，非經書面許可，不准透露或使用本資料，亦不准複印，複製或轉變成其他形式使用。
The information contained herein is the exclusive property of WNC and shall not be distributed, reproduced, or disclosed in whole or in part without prior written permission from WNC.

GO16	B:GPIO22	EINT22	DVDD18_IOLM	1.8V	N25	Wake up
GO17	B:GPIO31	EINT31	DVDD18_IOLB	1.8V	R25	Wake up
GO18	B:GPIO36	EINT36	DVDD18_IOLB	1.8V	U24	Wake up
GO19	B:GPIO33	EINT33	DVDD18_IOLB	1.8V	V26	Wake up
GO20	B:GPIO30	EINT30	DVDD18_IOLM	1.8V	R24	Wake up
GO21	B:GPIO41	EINT41	DVDD28_IOAUD	3.3V	Y22	Wake up
GO22	B:GPIO39	EINT39	DVDD28_IOAUD	3.3V	Y26	Wake up
GO23	B:GPIO0	EINT0	DVDD18_IOLM	1.8V	M25	Wake up/ Hardware De-bounce
GO24	B:GPIO32	EINT32	DVDD18_IOLB	1.8V	T24	Wake up
GO25	B:GPIO34	EINT34	DVDD18_IOLB	1.8V	V25	Wake up
GO26	B:GPIO62	EINT62	DVDD18_IOBL	1.8V	AC19	Wake up
GO27	B:GPIO60	EINT60	DVDD18_IOBL	1.8V	AF20	Wake up
GO28	B:GPIO42	EINT42	DVDD28_IOAUD	3.3V	W21	Wake up
GO29	B:GPIO8	EINT8	DVDD18_IOBL	1.8V	AF23	Wake up/ Hardware De-bounce
GO30	B:GPIO18	EINT18	DVDD18_IOLM	1.8V	M24	Wake up
GO31	B:GPIO19	EINT19	DVDD18_IOLM	1.8V	M23	Wake up
GO32	B:GPIO35	EINT35	DVDD18_IOLB	1.8V	U25	Wake up
GO33	B:GPIO27	EINT27	DVDD18_IOLM	1.8V	T22	Wake up
GO34	B:GPIO26	EINT26	DVDD18_IOLM	1.8V	T21	Wake up
GO35	B:GPIO59	EINT59	DVDD18_IOBL	1.8V	AD20	Wake up
GO36	B:GPIO63	EINT63	DVDD18_IOBL	1.8V	AD19	Wake up
GO37	B:GPIO64	EINT64	DVDD18_IOBL	1.8V	AE19	Wake up
GO38	B:GPIO6	EINT6	DVDD28_IOTCU	3.3V	AC26	Wake up
GO39	B:GPIO5	EINT5	DVDD28_IOTCU	3.3V	AD25	Wake up/ Hardware De-bounce
GO40	B:GPIO20	EINT20	DVDD18_IOLM	1.8V	P23	Wake up
GO41	B:GPIO21	EINT21	DVDD18_IOLM	1.8V	N24	Wake up
GO42	B:GPIO23	EINT23	DVDD18_IOLM	1.8V	N23	Wake up
GO43	B:GPIO61	EINT61	DVDD18_IOBL	1.8V	AE20	Wake up

本資料為啟碁科技股份有限公司專有之財產，非經書面許可，不准透露或使用本資料，亦不准複印，複製或轉變成其他形式使用。
The information contained herein is the exclusive property of WNC and shall not be distributed, reproduced, or disclosed in whole or in part without prior written permission from WNC.

GO44	B:GPIO10	EINT10	DVDD18_IORB	1.8V	AC4	Wake up/ Hardware De-bounce
GO45	B:GPIO2	EINT2	DVDD18_IOLB	1.8V	V21	Wake up/ Hardware De-bounce
GO46	B:GPIO4	EINT4	DVDD28_IOTCU	3.3V	AD26	Wake up/ Hardware De-bounce
GO47	B:GPIO90	EINT90	DVDD18_IOBR	1.8V	AE4	Wake up
GO48	B:GPIO12	EINT12	DVDD18_IORT	1.8V	Y5	Wake up/ Hardware De-bounce
GO49	B:GPIO87	EINT87	DVDD18_IOBR	1.8V	AB6	Wake up
GO50	B:GPIO88	EINT88	DVDD18_IOBR	1.8V	AB5	Wake up
GO51	B:GPIO89	EINT89	DVDD18_IOBR	1.8V	AF4	Wake up
GO52	B:GPIO93	EINT93	DVDD18_IORB	1.8V	AE3	Wake up
GO53	B:GPIO94	EINT94	DVDD18_IORB	1.8V	AF2	Wake up
GO54	B:GPIO95	EINT95	DVDD18_IORB	1.8V	AF3	Wake up
GO55	B:GPIO96	EINT96	DVDD18_IORB	1.8V	AE2	Wake up

本資料為啟碁科技股份有限公司專有之財產，非經書面許可，不准透露或使用本資料，亦不准複印，複製或轉變成其他形式使用。
The information contained herein is the exclusive property of WNC and shall not be distributed, reproduced, or disclosed in whole or in part without prior written permission from WNC.

4 Mechanical design

4.1 Shielding case design

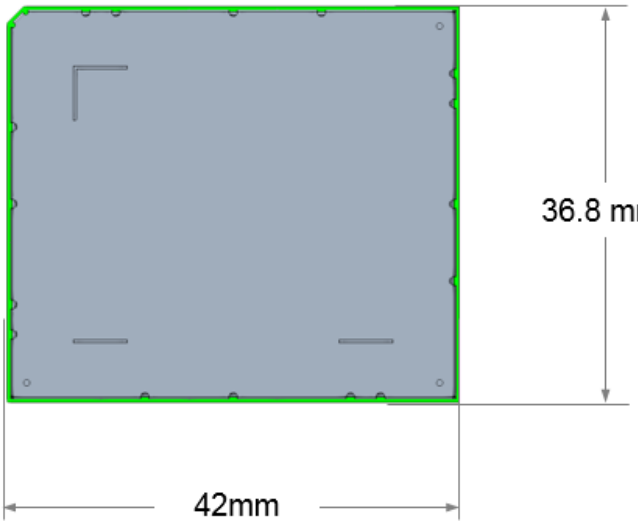

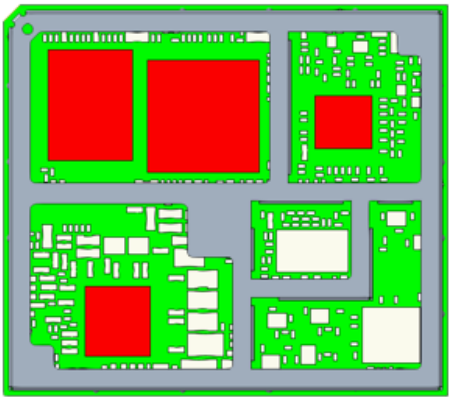

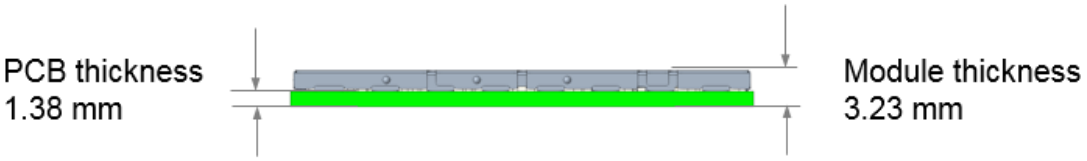

本資料為啟碁科技股份有限公司專有之財產，非經書面許可，不准透露或使用本資料，亦不准複印，複製或轉變成其他形式使用。
The information contained herein is the exclusive property of WNC and shall not be distributed, reproduced, or disclosed in whole or in part without prior written permission from WNC.

4.2 Label information

4.3 NAD land pattern

1.36-MM is the original NAD bottom side copper pad diameter size. It implemented the solder mask to cover these LGA pads; thus, SMD(Solder Mask Define) round pad diameter is 1.20-MM

本資料為啟碁科技股份有限公司專有之財產，非經書面許可，不准透露或使用本資料，亦不准複印，複製或轉變成其他形式使用。
The information contained herein is the exclusive property of WNC and shall not be distributed, reproduced, or disclosed in whole or in part without prior written permission from WNC.

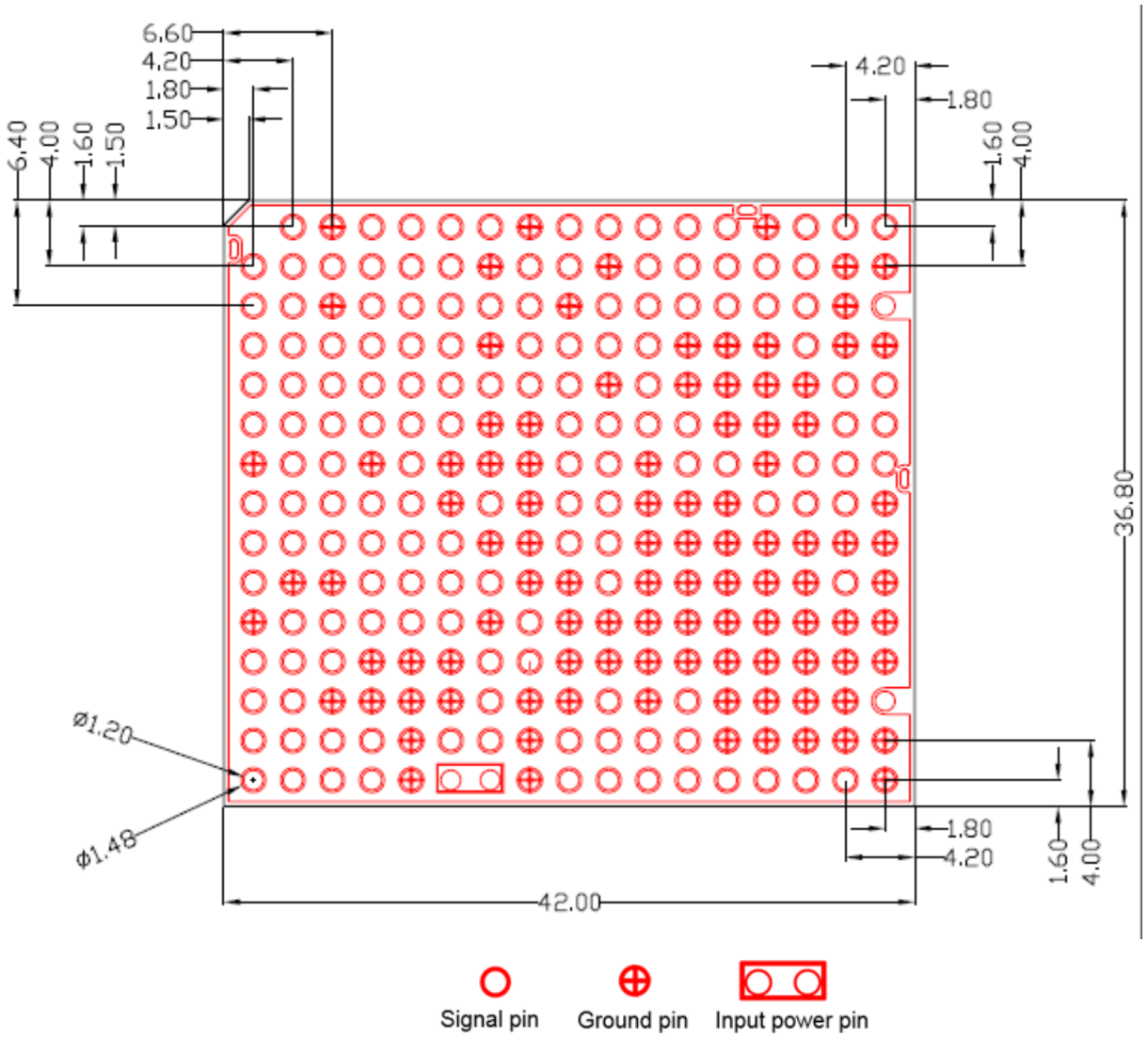

4.4 Stencil opening

Following chart is the recommendation for the stencil opening design
NOTE: The final design open window diagram will be updated after the reliability tests completed

本資料為啟碁科技股份有限公司專有之財產，非經書面許可，不准透露或使用本資料，亦不准複印，複製或轉變成其他形式使用。
The information contained herein is the exclusive property of WNC and shall not be distributed, reproduced, or disclosed in whole or in part without prior written permission from WNC.

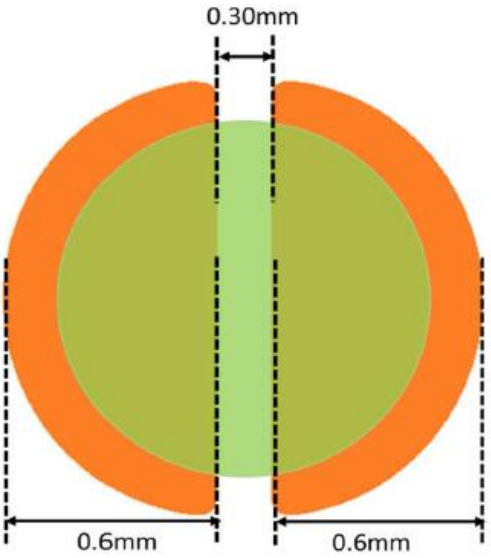

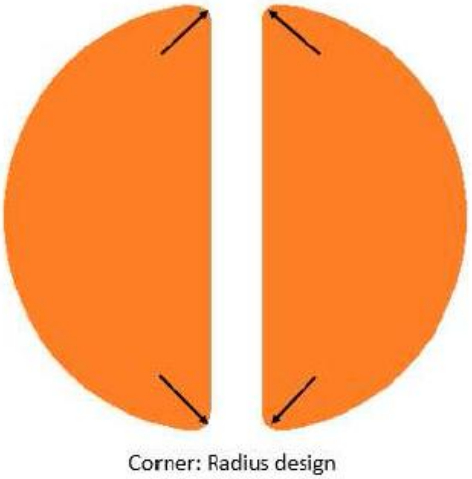

*Orange color: stencil aperture

Thickness of stencil: 0.12mm

Solder Paste Recommendation: SAC305 Alloy

4.5 Reflow profile

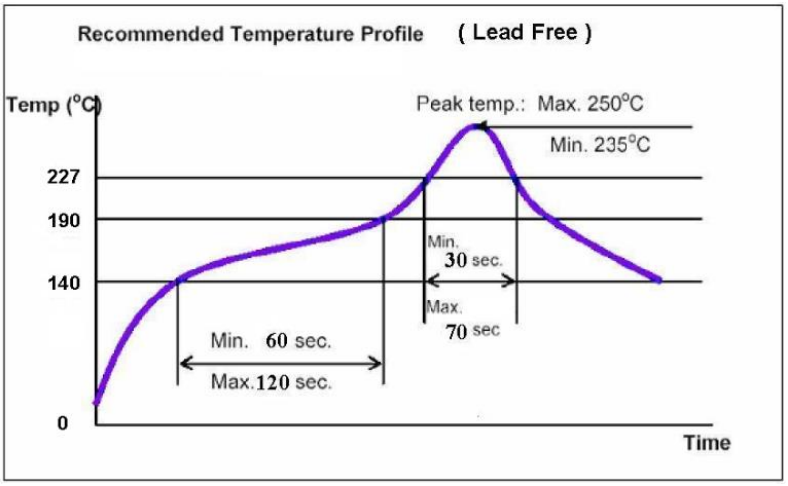

Profile Feature	Parameters
Peak Temperature	235 to 250°C
Reflow Zone(Above 227°C or 230°C)	30 to 70 Seconds
Preheat Zone(140 to 190°C)	60 to 120 Seconds

本資料為啟碁科技股份有限公司專有之財產，非經書面許可，不准透露或使用本資料，亦不准複印，複製或轉變成其他形式使用。
The information contained herein is the exclusive property of WNC and shall not be distributed, reproduced, or disclosed in whole or in part without prior written permission from WNC.

4.6 Moisture sensitivity level

UMC-MT2731R complies IPC/JEDEC J-STD-020 Standard MSL 3

4.7 ESD

It strongly recommends Developer to place ESD suppression components on the interconnection signal traces between NAD bottom pads and the application board for preventing NAD being suffered ESD events with the voltage strength over the requirement defined in the table as below

Specification/Requirements	Contact Discharge
Human Body Model(HBM)	2000 Voltages
Charge Device Model(CDM)	500 Voltages

4.8 Packaging

Tape and reel information

A simplified sketch of UMC-MT2731R tape carrier is shown in figures below, including the proper part orientation, key dimensions, and maximum number of devices per reel

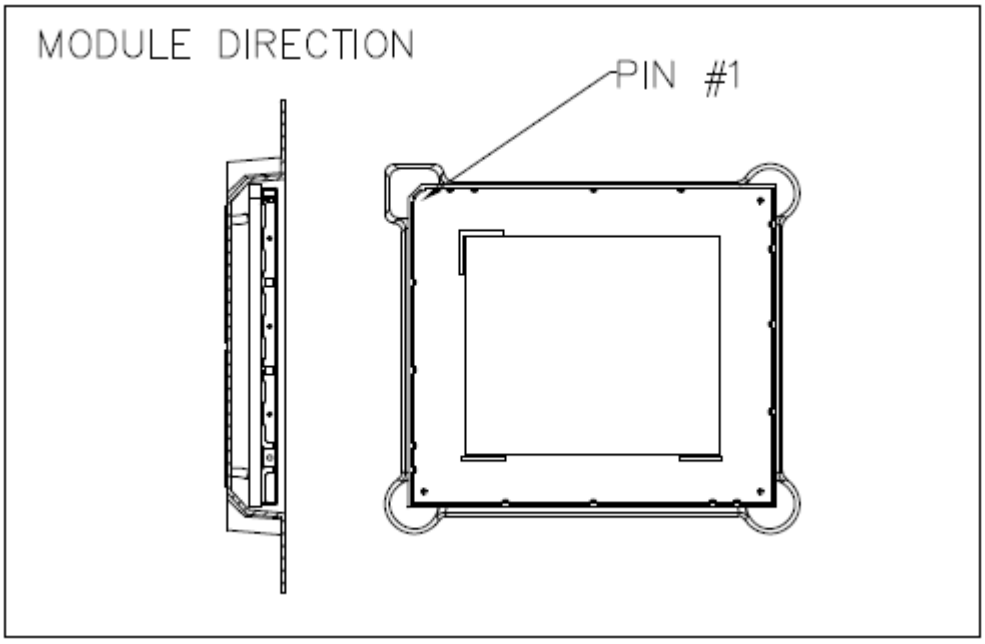

本資料為啟碁科技股份有限公司專有之財產，非經書面許可，不准透露或使用本資料，亦不准複印，複製或轉變成其他形式使用。
The information contained herein is the exclusive property of WNC and shall not be distributed, reproduced, or disclosed in whole or in part without prior written permission from WNC.

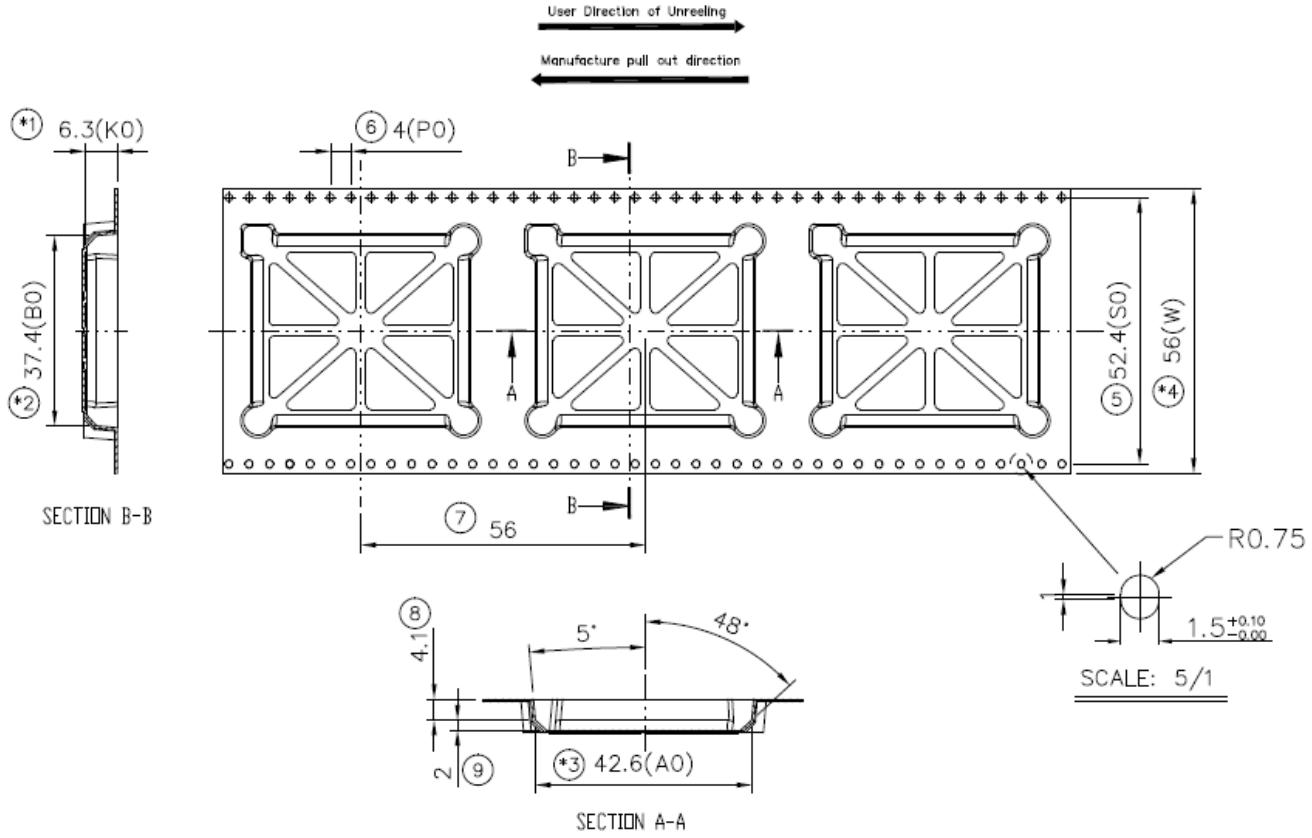

本資料為啟碁科技股份有限公司專有之財產，非經書面許可，不准透露或使用本資料，亦不准複印，複製或轉變成其他形式使用。
The information contained herein is the exclusive property of WNC and shall not be distributed, reproduced, or disclosed in whole or in part without prior written permission from WNC.

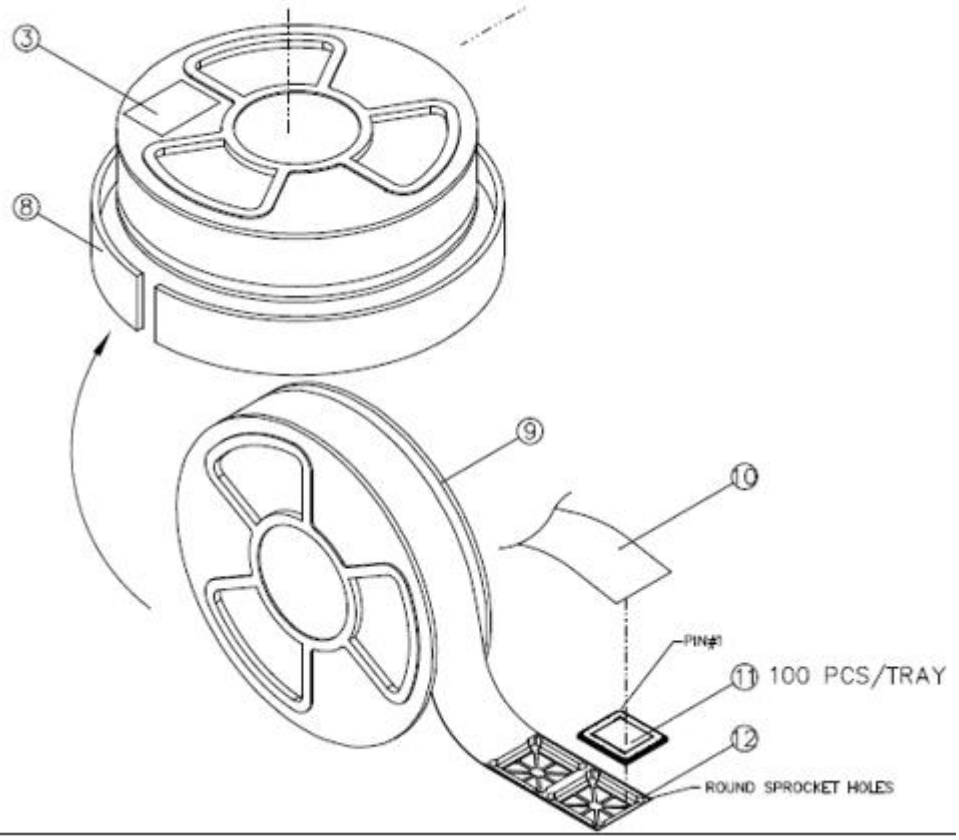

5 Thermal design

5.1 Thermal sensor

(1)There are four temperature sensors embedded in MT2731 device package. Developer could read temperature value inside MT2731 by the software command. When the package temperature reached the threshold point, MT2731 will trigger itself resetting for the over-heating protection

(2)MT2731 could get thermal information from two on board thermistors and monitor components' temperature near these two thermistor locations

本資料為啟碁科技股份有限公司專有之財產，非經書面許可，不准透露或使用本資料，亦不准複印，複製或轉變成其他形式使用。
The information contained herein is the exclusive property of WNC and shall not be distributed, reproduced, or disclosed in whole or in part without prior written permission from WNC.

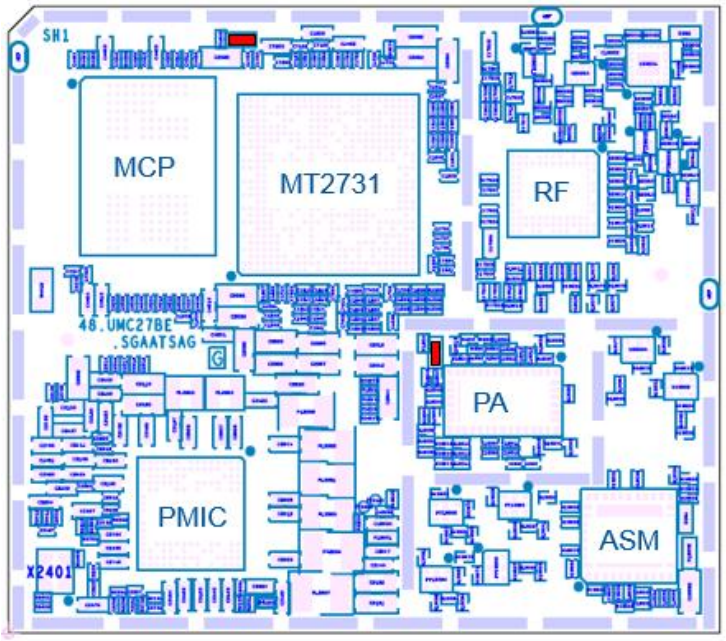

Thermistor: to detect PCB temperature

(3)Developer could connect four outgoing general purpose ADC interfaces, named as AUXADC_VIN2, AUXADC_VIN4, AUXADC_VIN6 and AUXADC_VIN8, of NAD for monitoring hotspots' temperature on the application board

5.2 Software thermal mitigation

UMC-MT2731R has software approaches for the thermal mitigation. When the temperature reached the defined threshold point, LINUX kernel will control the system power by holding processors and RF power amplifier current consumption. This will make UMC-MT2731R work safely under the critical and concerned temperature condition

本資料為啟碁科技股份有限公司專有之財產，非經書面許可，不准透露或使用本資料，亦不准複印，複製或轉變成其他形式使用。
The information contained herein is the exclusive property of WNC and shall not be distributed, reproduced, or disclosed in whole or in part without prior written permission from WNC.

6 RF specification

6.1 UMC-MT2731R

6.1.1 Maximum output power

Note(*): The minimum data in the table is following 3GPP standard

	Specification (Band/Uplink Frequency)	Minimum	Typical	Maximum	Unit
LTE	Band1(1920 - 1980 MHz)	20.3*	23	24	dBm
	Band2(1850 - 1910 MHz)	20.3*	23	24	dBm
	Band3(1710 - 1785 MHz)	20.3*	23	24	dBm
	Band4(1710 - 1755 MHz)	20.3*	23	24	dBm
	Band5(824 - 849 MHz)	20.3*	23	24	dBm
	Band7(2500 - 2570 MHz)	20.3*	23	24	dBm
	Band8(880 - 915 MHz)	20.3*	23	24	dBm
	Band12(699 - 716 MHz)	20.3*	23	24	dBm
	Band17(704 - 716 MHz)	20.3*	23	24	dBm
	Band20(832 – 862 MHz)	20.3*	23	24	dBm
	Band25(1850 - 1915 MHz)	20.3*	23	24	dBm
	Band26(814 - 849 MHz)	20.3*	23	24	dBm
	Band28(703 - 748 MHz)	20.3*	23	24	dBm
	Band66(1710 - 1780 MHz)	20.3*	23	24	dBm
GSM (GMSK)	850(824 - 849 MHz)	31	33	35	dBm
	900(880 - 915 MHz)	31	33	35	dBm
	1800(1710 - 1785 MHz)	28	30	32	dBm
	1900(1850 - 1910 MHz)	28	30	32	dBm
GSM (8-PSK)	850(824 - 849 MHz)	25	27	29	dBm
	900(880 - 915 MHz)	25	27	29	dBm
	1800(1710 - 1785 MHz)	24	26	28	dBm
	1900(1850 - 1910 MHz)	24	26	28	dBm

本資料為啟碁科技股份有限公司專有之財產，非經書面許可，不准透露或使用本資料，亦不准複印，複製或轉變成其他形式使用。
The information contained herein is the exclusive property of WNC and shall not be distributed, reproduced, or disclosed in whole or in part without prior written permission from WNC.

6.1.2 Sensitivity limit

	Specification (Band/Downlink Frequency)	Typical	Unit
LTE	Band1(2110 - 2170 MHz)	-96.3	dBm
10-MHz BW	Band2(1930 - 1990 MHz)	-94.3	dBm
QPSK	Band3(1805 - 1880 MHz)	-93.3	dBm
	Band4(2110 - 2155 MHz)	-96.3	dBm
	Band5(869 - 894 MHz)	-94.3	dBm
	Band7(2620 - 2690 MHz)	-94.3	dBm
	Band8(925 - 960 MHz)	-93.3	dBm
	Band12(729 - 746 MHz)	-93.3	dBm
	Band17(734 - 746 MHz)	-93.3	dBm
	Band20(791 – 821 MHz)	-93.3	dBm
	Band25(1930 - 1995 MHz)	-92.8	dBm
	Band26(859 - 894 MHz)	-93.8	dBm
	Band28(758 - 803 MHz)	-94.8	dBm
	Band66(2110 - 2200 MHz)	-95.8	dBm
GSM	850(869 - 894 MHz)	-102	dBm
	900(925 - 960 MHz)	-102	dBm
	1800(1805 - 1880 MHz)	-102	dBm
	1900(1930 - 1990 MHz)	-102	dBm

7 Evaluation Kit

WNC provides EVK built with UMC-MT2731 EU PoC. User could use this EVK to verify basic functions or develop applications on MT2731 platform. Following is EVK block diagram

本資料為啟碁科技股份有限公司專有之財產，非經書面許可，不准透露或使用本資料，亦不准複印，複製或轉變成其他形式使用。
The information contained herein is the exclusive property of WNC and shall not be distributed, reproduced, or disclosed in whole or in part without prior written permission from WNC.

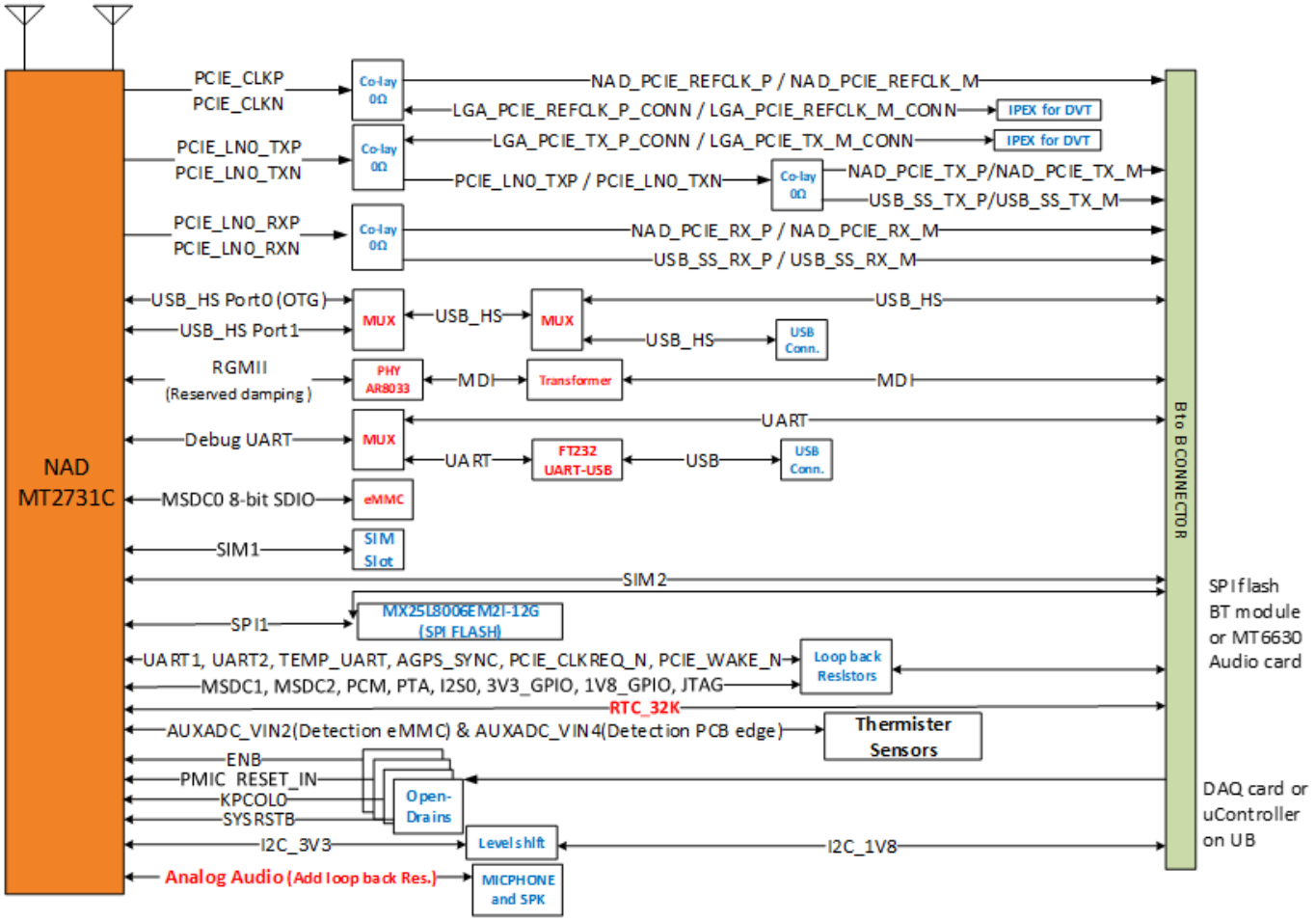

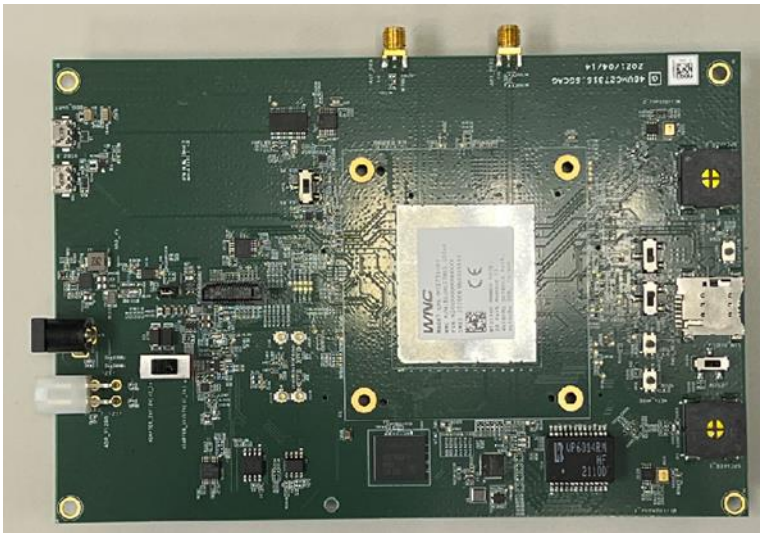

本資料為啟碁科技股份有限公司專有之財產，非經書面許可，不准透露或使用本資料，亦不准複印，複製或轉變成其他形式使用。
The information contained herein is the exclusive property of WNC and shall not be distributed, reproduced, or disclosed in whole or in part without prior written permission from WNC.

8 Design application notes

This section describes how to connect UMC-MT2731R NAD to the circuitry on the application board, and notes that system developers should pay attention to in their design stage

8.1 Power trace

On VSYS power traces from the application board to UMC-MT2731R, to place the de-coupling capacitors, 10-uF or 22-uF, near by the input of NAD as close as possible. Recommended width of VSYS trace is at least wider than 80-mil

8.2 Power ON/OFF and Reset

8.2.1 Power ON

After supplying VSYS, to pull PMIC_ENB LOW to power NAD on

8.2.2 Power OFF

When NAD is working under the operation mode, pull PMIC_ENB HIGH to power NAD off. Powering off sequence requires at least 140-ms

8.2.3 Reset

(1) To pull PMIC_RESET_B LOW at least 200-ms for rebooting NAD the with completed power sequence
(2) Alternative approach is pulling SYSRSTB LOW to reset NAD without resetting the power ON/OFF sequence. This is only for the debugging

NAD Power On/Off Sequence

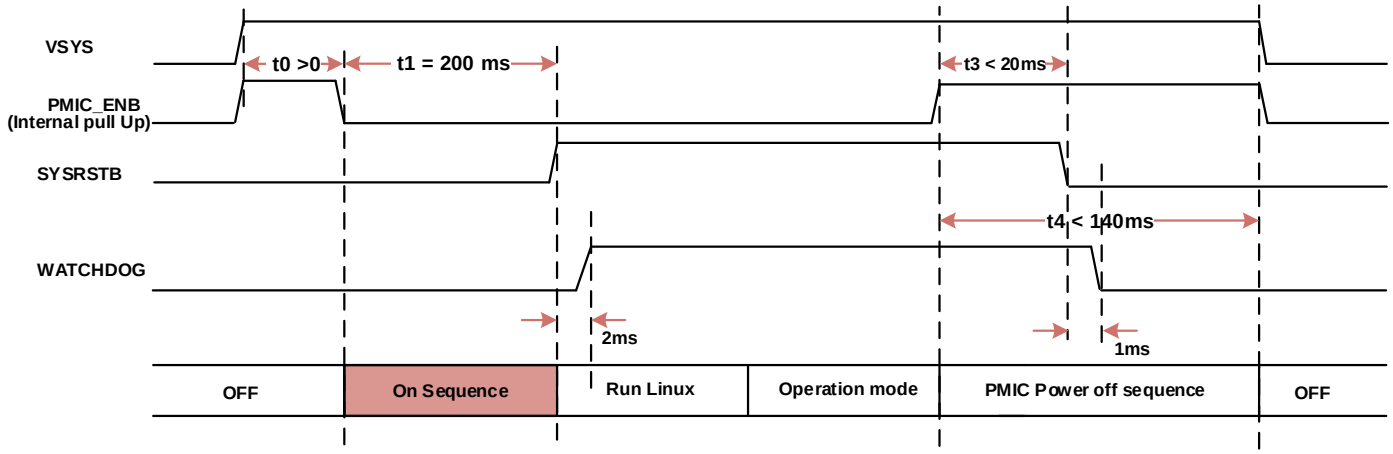

NAD Pad#	NAD Pad Name	Pin Function Description

本資料為啟碁科技股份有限公司專有之財產，非經書面許可，不准透露或使用本資料，亦不准複印，複製或轉變成其他形式使用。
The information contained herein is the exclusive property of WNC and shall not be distributed, reproduced, or disclosed in whole or in part without prior written permission from WNC.

Q6/Q7	VSYS	System supply-feed power of NAD
P6	PMIC_ENB	Pull this pin low to power NAD on
P7	PMIC_RESET_B	Pull this pin low to trigger the reset of PMIC
H7	SYSRSTB	Pull this pin low to reset NAD without resetting the power ON/OFF sequence of PMIC

8.3 USB2.0

WNC enable only 1 USB2.0 port for customer ,If customer want to use extra USB port, please contact with WNC .

8.4 USB2.0 OTG

The total routing length of HS-USB signal traces should be less than 7500-mil and designed with 90-OHM line impedance on the application board, and the difference length of differential pair signals shall be kept within 40-mil

NAD Pad#	NAD Pad Name	Pin Function Description
B8	USB_DM_P0	USB 2.0 OTG differential pair signal
B9	USB_DP_P0	USB 2.0 OTG differential pair signal
A12	IDDIG	ID pin of USB 2.0 OTG interface
L4	VBUS	Ex-VBUS detect signal

(support host mode & device mode)

8.5 I2C

I2C is internally pulled-up by 3.3V with 4.7K-OHM resistor. Push-pull is recommended for high speed mode. Open-drain is recommended for standard, fast and fast plus mode

NAD Pad#	Pin Function Description	GPIO Name	I/O Type
E11	SCL0	GPIO42	Push-pull / Open-drain
D10	SDA0	GPIO41	Push-pull / Open-drain

8.6 RGMII

Signal voltage level is required 3.3-Volatge,trace length <6000mil(Ch loading~15pf),CLK:guarding by GND,DATA:guarding by GND,trace difference <700mil,trace width/trace is 1W/1W.

Ethernet interface can be configured as MII or RMII or RGMII interface. Below list shows the different configuration for different interfaces. Default setting is RGMII interface. User can follow this list to configure pin to implement MII or RMII.

LGA PAD No	LGA PAD name	MII	RMII	RGMII

本資料為啟碁科技股份有限公司專有之財產，非經書面許可，不准透露或使用本資料，亦不准複印，複製或轉變成其他形式使用。
The information contained herein is the exclusive property of WNC and shall not be distributed, reproduced, or disclosed in whole or in part without prior written permission from WNC.

H3	GBE_TXC	TX_CLK(I)	CLK_REF(I)	GTXC(O)
H1	GBE_TXD0	TXD0(O)	TXD0(O)	TXD0(O)
J1	GBE_TXD1	TXD1(O)	TXD1(O)	TXD1(O)
H2	GBE_TXD2	TXD2(O)		TXD2(O)
J3	GBE_TXD3	TXD3(O)		TXD3(O)
H5	EINT130 (GBE_TXER)	TX_ER(O)		
J2	TX_CTL (GBE_TXEN)	TX_EN(O)	TX_EN(O)	TX_CTL(O)
L5	GBE_RXC	RX_CLK(I)	CLK_REF(I)	RX_CLK(I)
J6	GBE_RXD0	RXD0(I)	RXDO(I)	RXD0(I)
K4	GBE_RXD1	RXD1(I)	RXD1(I)	RXD1(I)
K6	GBE_RXD2	RXD2(I)		RXD2(I)
L6	GBE_RXD3	RXD3(I)		RXD3(I)
K7	EINT131 (GBE_RXER)	RX_ER(I)	RX_ER(I)	
K5	RX_CTL (GBE_RXDV)	RX_DV(I)	CRS_DV(I)	RX_CTL(I)
G5	EINT132 (GBE_COL)	COL(I)		
J5	GBE_INTR	INTR/CRS(I)	INTR/CRS(I)	INTR/CRS(I)
J4	GBE_MDC	MDC(O)	MDC(O)	MDC(O)
H4	GBE_MDIO	MDIO(I/O)	MDIO(I/O)	MDIO(I/O)

8.7 MSDC

8.7.1 Layout

The total routing length of eMMC signal traces should be less than 1000-mil and the difference length of MSDC signals shall be kept within 10-mil on the application board. Developer could use VEMC_PMU and VIO18_PMU as the power supply of eMMC device

8.7.2 MSDC interface

MSDC0 has the independent power domain and is dedicated for eMMC device on the application board.

Interface	Function	Standard
MSDC0	eMMC	eMMC 5.0

8.8 SIM

8.8.1 Layout

VSIM1_PMU/VSIM2_PMU is the power supply-feed for SIM1/SIM2 on the application board, and able to be configured as 1.8- or 3.3-Volatge level; the default setting is 1.8-Volatge. Both SIM1_SCLK and SIM2_SCLK is recommended to be shielded by the grounding

8.9 RF antenna port

本資料為啟碁科技股份有限公司專有之財產，非經書面許可，不准透露或使用本資料，亦不准複印，複製或轉變成其他形式使用。
The information contained herein is the exclusive property of WNC and shall not be distributed, reproduced, or disclosed in whole or in part without prior written permission from WNC.

Preventing the coplanar grounding being quite close 50-OHM RF transmission lines shall be considered by Developer when you do RF trace design connected to RF antenna pads of UMC-MT2731R on the application board. It is better to have the keep-out gap which is 3 to 5 times of top layer RF trace width between these RF lines and the grounding
Meanwhile, it is also important to reserve the pi-matching circuit design close to NAD antenna out pads as possible
Avoid making RF layout trace of the primary antenna port cross the diversity antenna trace, and then this would cause the poor antenna isolation to impact RF performance of the application board

8.9.1 Antenna detection

Following concept schematic diagram is a design example to build the antenna detection circuit by using NAD AUXADC pin of AUXADC_VIN2 for monitoring NAD ANT_PTRX connection status with the external passive antenna shunted with a grounded inductor. In this diagram

DC block: to play the role of isolating the detection signal with Antenna matching possibly consisted of the grounded matching elements
RF block: to prevent RF signals being fed into the antenna detection circuitry
GPIO resistor: to limit the current draw when the external antenna is connected

Connected Case: NAD EINT pin would continuously send out the detection signal of the static high state; if the external antenna is well-attached with the application board, the software reading value of AUXADC_VIN2 is kept as static zero-Voltage

Disconnected Case: If any broken events happened on RF path between the external antenna and NAD ANT_PTRX, AUXADC_VIN2 would read a high state voltage level generated by NAD EINT port

本資料為啟碁科技股份有限公司專有之財產，非經書面許可，不准透露或使用本資料，亦不准複印，複製或轉變成其他形式使用。
The information contained herein is the exclusive property of WNC and shall not be distributed, reproduced, or disclosed in whole or in part without prior written permission from WNC.

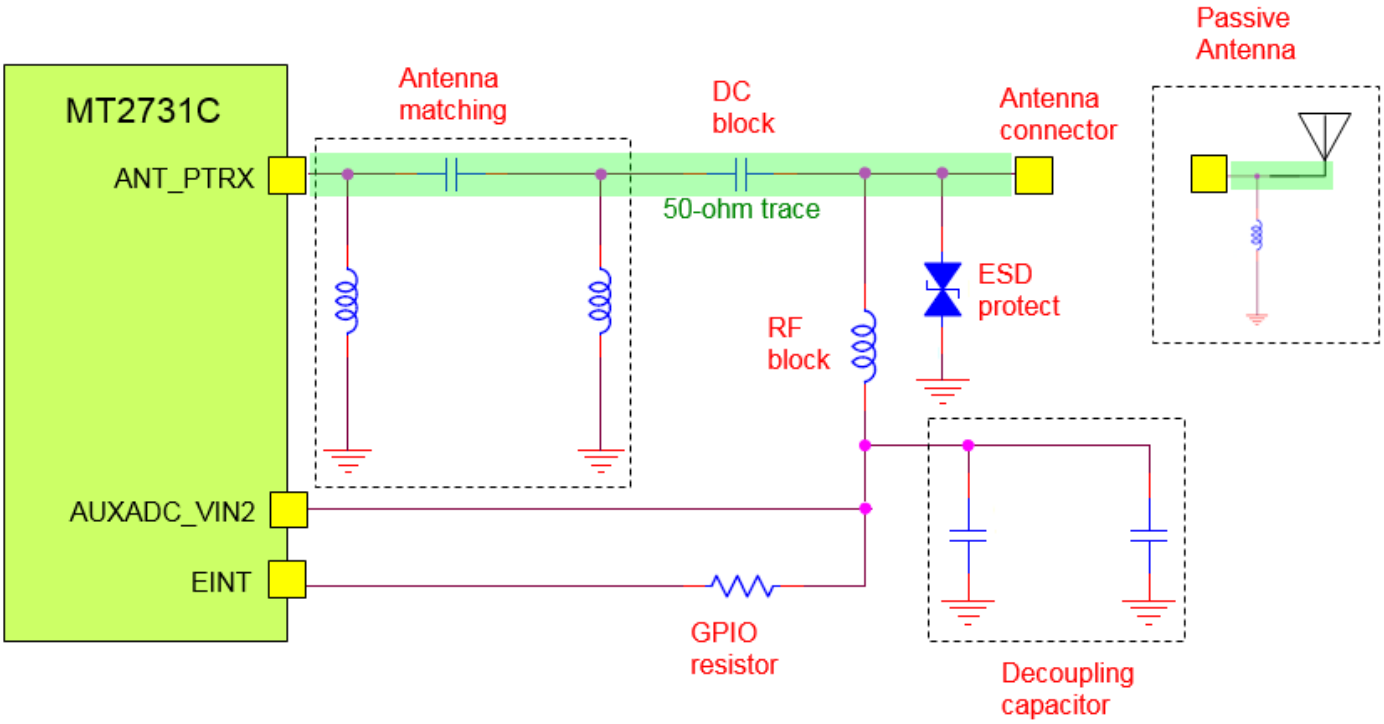

8.10 KPCOL0

Pull KPCOL0 LOW to force NAD being USB Download Mode for user updating NAD software

8.11 IDDIG

This pin is used as USB 2.0 OTG ID pin

8.12 WATCHDOG

WATCHDOG is a 1.8V level signal generated from MT2731 and then received by PMIC. In normal cases, MT2731 keeps WATCHDOG as the high state; in case of the low state event happened, a NAD resetting reaction steps would be performed between MT2731 and PMIC and defined as below

(1) If MT2731 is malfunctioning, WATCHDOG would become the low state, as well as WDTRSTB_IN of PMIC. Then, PMIC starts itself reset
(2) After the reset of PMIC is finished, PMIC sent RESETB of the low state to SYSRSTB of MT2731. Then, MT2731 also starts itself reset procedure

本資料為啟碁科技股份有限公司專有之財產，非經書面許可，不准透露或使用本資料，亦不准複印，複製或轉變成其他形式使用。
The information contained herein is the exclusive property of WNC and shall not be distributed, reproduced, or disclosed in whole or in part without prior written permission from WNC.

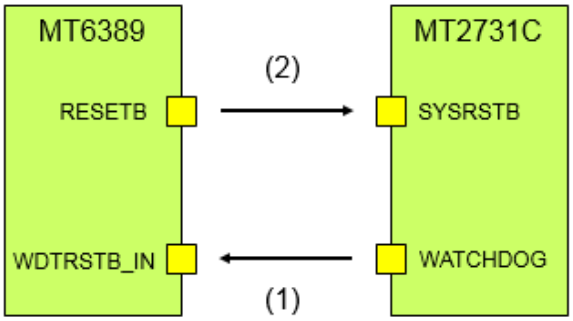

8.13 SRCLKENA0

NAD status indicator generated from MT2731; the state of high(1.8V) for Normal Mode, as well as low(0-Voltage) for Sleep/Low Power Mode

8.14 RTC_CLK

32.768-KHz clock signal generated from PMIC is able to be the synchronized signal source for other functional blocks on the application board

8.15 Thermal

It is recommended to reserve contact ground area as broad as possible on TCU. By widening contact ground area, the heat generated by module will be dissipated more efficiently. Green rectangular area is reference area for ground contact

本資料為啟碁科技股份有限公司專有之財產，非經書面許可，不准透露或使用本資料，亦不准複印，複製或轉變成其他形式使用。
The information contained herein is the exclusive property of WNC and shall not be distributed, reproduced, or disclosed in whole or in part without prior written permission from WNC.

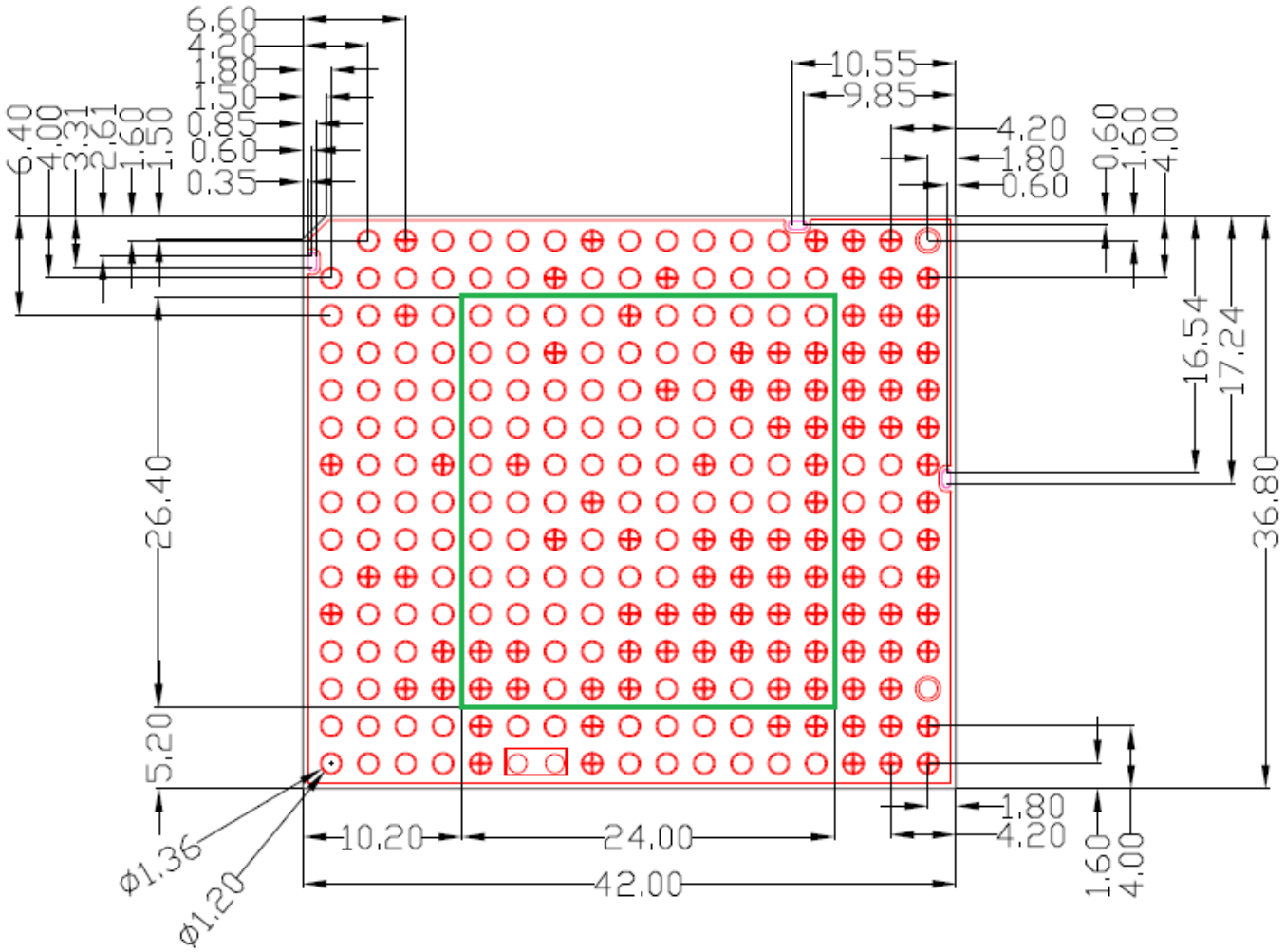

9 Abbreviation

Acronym	Definition
ADC	Analog Digital Converter
CAT	Category
CHN	China
codec	Compress Decompress
CS	Circuit Switch
DC	Direct Current
DL	Down Link
DMIPS	Dhrystone Million Instructions executed Per Second
e-call	Emergency Call

本資料為啟碁科技股份有限公司專有之財產，非經書面許可，不准透露或使用本資料，亦不准複印，複製或轉變成其他形式使用。
The information contained herein is the exclusive property of WNC and shall not be distributed, reproduced, or disclosed in whole or in part without prior written permission from WNC.

EDGE	Enhanced Data Rate for GSM Evolution
EINT	External Interrupt Input
eMMC	Embedded Multi Media Card
ESD	Electro Static Discharge
EU	Europe
GMII	Gigabit Media Independent Interface
GND	Ground
GPIO	General Purpose Input/Output
GPRS	General Packet Radio Service
GSM	Global System for Mobile Communications
I/O	Input / Output
I2C	Inter-integrated circuit
I2S	Inter-IC sound
IMS	IP Multimedia Subsystem
IP	Internet Protocol
JTAG	Joint Test Action Group
LPDDR	Low Power Double Data Rate
LTE	Long Term Evolution
Mbps	Megabit per second
MCP	Multi-Chip Package
MII	Media Independent Interface
mil	1/1000 inch
MSDC	Mass Storage Device Class
MT6630	MTK chip has Bluetooth, WLAN, GNSS function
NA	North America
NAD	Networking Access Device
OSS	Open Source Software
OTG	On The Go
PCB	Printed Circuit Board

本資料為啟碁科技股份有限公司專有之財產，非經書面許可，不准透露或使用本資料，亦不准複印，複製或轉變成其他形式使用。
The information contained herein is the exclusive property of WNC and shall not be distributed, reproduced, or disclosed in whole or in part without prior written permission from WNC.

PCIe	Peripheral Component Interconnect Express
PCM	Pulse Code Modulation
PD	Pull Down
PMIC	Power management integrated circuit
PU	Pull Up
RF	Radio Frequency
RFFE	RF Front End
RGMII	Reduced Gigabit Media Independent Interface
ROW	Rest Of World
RTC	Real Time Clock
RX	Receive
SDIO	Secure Digital Input/Output
SIM	Subscriber Identification Module
SKU	Stock Keeping Unit
SPI	Serial Peripheral interface
TX	Transmit
UART	Universal Asynchronous Receiver and Transmitter
UIM	User identity module
UL	Up Link
UMTS	Universal mobile telecommunications system
USB	Universal Serial Bus
WCDMA	Wideband Code Division Multiple Access

本資料為啟碁科技股份有限公司專有之財產，非經書面許可，不准透露或使用本資料，亦不准複印，複製或轉變成其他形式使用。
The information contained herein is the exclusive property of WNC and shall not be distributed, reproduced, or disclosed in whole or in part without prior written permission from WNC.

10. Warning statement

Federal Communication Commission Interference Statement:

This device complies with Part 15 of the FCC Rules. Operation is subject to the following two conditions: (1) This device may not cause harmful interference, and (2) this device must accept any interference received, including interference that may cause undesired operation.

This equipment has been tested and found to comply with the limits for a Class B digital device, pursuant to Part 15 of the FCC Rules. These limits are designed to provide reasonable protection against harmful interference in a residential installation. This equipment generates, uses and can radiate radio frequency energy and, if not installed and used in accordance with the instructions, may cause harmful interference to radio communications. However, there is no guarantee that interference will not occur in a particular installation. If this equipment does cause harmful interference to radio or television reception, which can be determined by turning the equipment off and on, the user is encouraged to try to correct the interference by one of the following measures:

- Reorient or relocate the receiving antenna.
- Increase the separation between the equipment and receiver.
- Connect the equipment into an outlet on a circuit different from that to which the receiver is connected.
- Consult the dealer or an experienced radio/TV technician for help.

FCC Caution: Any changes or modifications not expressly approved by the party responsible for compliance could void the user's authority to operate this equipment.

This transmitter must not be co-located or operating in conjunction with any other antenna or transmitter.

Radiation Exposure Statement:

This equipment complies with FCC radiation exposure limits set forth for an uncontrolled environment. This equipment should be installed and operated with minimum distance 21cm between the radiator & your body.

本資料為啟碁科技股份有限公司專有之財產，非經書面許可，不准透露或使用本資料，亦不准複印，複製或轉變成其他形式使用。
The information contained herein is the exclusive property of WNC and shall not be distributed, reproduced, or disclosed in whole or in part without prior written permission from WNC.

This module is intended for OEM integrators only. Per FCC KDB 996369 D03 OEM Manual v01 guidance, the following conditions must be strictly followed when using this certified module:

KDB 996369 D03 OEM Manual v01 rule sections:

2.2 List of applicable FCC rules

This module has been tested for compliance to FCC Part 27, 22, 24, 90

2.3 Summarize the specific operational use conditions

The module is tested for standalone mobile RF exposure use condition. Any other usage conditions such as co-location with other transmitter(s) or being used in a portable condition will need a separate reassessment through a class II permissive change application or new certification.

2.4 Limited module procedures

Not applicable.

2.5 Trace antenna designs

Refer to "Operational Description Antenna trace"
Please contact the module supplier

2.6 RF exposure considerations

This equipment complies with FCC mobile radiation exposure limits set forth for an uncontrolled environment. This equipment should be installed and operated with a minimum distance of 21cm between the radiator & your body. If the module is installed in a portable host, a separate SAR evaluation is required to confirm compliance with relevant FCC portable RF exposure rules.

2.7 Antennas

The following antennas have been certified for use with this module; antennas of the same type with equal or lower gain may also be used with this module. The antenna must be installed such that 21cm can be maintained between the antenna and users.

Antenna Type	Dipole
Antenna connector	SMA

2.8 Label and compliance information

The final end product must be labeled in a visible area with the following: "Contains FCC ID: NKRUMC-STD31BPN". The grantee's FCC ID can be used only when all FCC compliance requirements are met.

2.9 Information on test modes and additional testing requirements

This transmitter is tested in a standalone mobile RF exposure condition and any co-located or simultaneous transmission with other transmitter(s) or portable use will require a separate class II permissive change re-evaluation or new certification.

2.10 Additional testing, Part 15 Subpart B disclaimer

This transmitter module is tested as a subsystem and its certification does not cover the FCC Part 15 Subpart B (unintentional radiator) rule requirement applicable to the final host. The final host will still need to be reassessed for compliance to this portion of rule requirements if applicable.

As long as all conditions above are met, further transmitter test will not be required. However, the OEM integrator is still responsible for testing their end-product for any additional compliance requirements required with this module installed.

本資料為啟碁科技股份有限公司專有之財產，非經書面許可，不准透露或使用本資料，亦不准複印，複製或轉變成其他形式使用。
The information contained herein is the exclusive property of WNC and shall not be distributed, reproduced, or disclosed in whole or in part without prior written permission from WNC.

IMPORTANT NOTE:

In the event that these conditions cannot be met (for example certain laptop configurations or co-location with another transmitter), then the FCC authorization is no longer considered valid and the FCC ID cannot be used on the final product. In these circumstances, the OEM integrator will be responsible for re-evaluating the end product (including the transmitter) and obtaining a separate FCC authorization.

Manual Information To the End User

The OEM integrator has to be aware not to provide information to the end user regarding how to install or remove this RF module in the user's manual of the end product which integrates this module.
The end user manual shall include all required regulatory information/warning as show in this manual.

OEM/Host manufacturer responsibilities

OEM/Host manufacturers are ultimately responsible for the compliance of the Host and Module. The final product must be reassessed against all the essential requirements of the FCC rule such as FCC Part 15 Subpart B before it can be placed on the US market. This includes reassessing the transmitter module for compliance with the Radio and EMF essential requirements of the FCC rules. This module must not be incorporated into any other device or system without retesting for compliance as multi-radio and combined equipment

Industry Canada statement:

This device complies with ISED's licence-exempt RSSs. Operation is subject to the following two conditions: (1) This device may not cause harmful interference, and (2) this device must accept any interference received, including interference that may cause undesired operation.

Le présent appareil est conforme aux CNR d' ISED applicables aux appareils radio exempts de licence. L'exploitation est autorisée aux deux conditions suivantes : (1) le dispositif ne doit pas produire de brouillage préjudiciable, et (2) ce dispositif doit accepter tout brouillage reçu, y compris un brouillage susceptible de provoquer un fonctionnement indésirable.

Radiation Exposure Statement

This equipment complies with ISED radiation exposure limits set forth for an uncontrolled environment. This equipment should be installed and operated with greater than 31cm between the radiator & your body.

Déclaration d'exposition aux radiations:

Cet équipement est conforme aux limites d'exposition aux rayonnements ISED établies pour un environnement non contrôlé. Cet équipement doit être installé et utilisé à plus de 31cm entre le radiateur et votre corps.

This device is intended only for OEM integrators under the following conditions

1) The antenna must be installed and operated with greater than 31cm between the antenna and users
2) The transmitter module may not be co-located with any other transmitter or antenna.
3) Module approval valid only when the module is installed in the tested host or compatible series of host which have similar RF exposure characteristic with equal or larger antenna separation distance.

As long as 3 conditions above are met, further transmitter test will not be required. However, the OEM integrator is still responsible for testing their end-product for any additional compliance requirements required with this module installed.

本資料為啟碁科技股份有限公司專有之財產，非經書面許可，不准透露或使用本資料，亦不准複印，複製或轉變成其他形式使用。
The information contained herein is the exclusive property of WNC and shall not be distributed, reproduced, or disclosed in whole or in part without prior written permission from WNC.

Cet appareil est conçu uniquement pour les intégrateurs OEM dans les conditions suivantes:
1) L'antenne doit être installé et exploité avec plus de 31cm entre l'antenne et les utilisateurs
2) Le module émetteur peut ne pas être coïmplanté avec un autre émetteur ou antenne.
3) Approbation du Module valable que lorsque le module est installé dans l'hôte testé ou de la série de l'hôte compatible qui ont même caractéristique de l'exposition aux RF avec la distance égale ou supérieure séparation antenne.

Tant que les 3 conditions ci-dessus sont remplies, des essais supplémentaires sur l'émetteur ne seront pas nécessaires. Toutefois, l'intégrateur OEM est toujours responsable des essais sur son produit final pour toutes exigences de conformité supplémentaires requis pour ce module installé.

IMPORTANT NOTE
In the event that these conditions cannot be met (for example certain laptop configurations or co-location with another transmitter), then the Canada authorization is no longer considered valid and the IC ID cannot be used on the final product. In these circumstances, the OEM integrator will be responsible for re-evaluating the end product (including the transmitter) and obtaining a separate Canada authorization.

NOTE IMPORTANTE
Dans le cas où ces conditions ne peuvent être satisfaites (par exemple pour certaines configurations d'ordinateur portable ou de certaines co-localisation avec un autre émetteur), l'autorisation du Canada n'est plus considéré comme valide et l'ID IC ne peut pas être utilisé sur le produit final. Dans ces circonstances, l'intégrateur OEM sera chargé de réévaluer le produit final (y compris l'émetteur) et l'obtention d'une autorisation distincte au Canada.

End Product Labeling
This transmitter module is authorized only for use in device where the antenna may be installed and operated with greater than 31cm between the antenna and users. The final end product must be labeled in a visible area with the following: “Contains IC: 4441A-UMCSTD31BPN”.

Plaque signalétique du produit final
Ce module émetteur est autorisé uniquement pour une utilisation dans un appareil où l’antenne peut être installée et utilisée à plus de 31cm entre l’antenne et les utilisateurs. Le produit final doit être étiqueté dans un endroit visible avec l'inscription suivante: "Contient des IC: 4441A-UMCSTD31BPN ".

Manual Information To the End User
The OEM integrator has to be aware not to provide information to the end user regarding how to install or remove this RF module in the user’s manual of the end product which integrates this module.
The end user manual shall include all required regulatory information/warning as show in this manual.

Manuel d'information à l'utilisateur final
L'intégrateur OEM doit être conscient de ne pas fournir des informations à l'utilisateur final quant à la façon d'installer ou de supprimer ce module RF dans le manuel de l'utilisateur du produit final qui intègre ce module.
Le manuel de l'utilisateur final doit inclure toutes les informations réglementaires requises et avertissements comme indiqué dans ce manuel

本資料為啟碁科技股份有限公司專有之財產，非經書面許可，不准透露或使用本資料，亦不准複印，複製或轉變成其他形式使用。
The information contained herein is the exclusive property of WNC and shall not be distributed, reproduced, or disclosed in whole or in part without prior written permission from WNC.

DETACHABLE ANTENNA USAGE

This radio transmitter [IC: 4441A-UMCSTD31BPN] has been approved by Innovation, Science and Economic Development Canada to operate with the antenna types listed below, with the maximum permissible gain indicated. Antenna types not included in this list that have a gain greater than the maximum gain indicated for any type listed are strictly prohibited for use with this device.

Le présent émetteur radio [IC: 4441A-UMCSTD31BPN] a été approuvé par Innovation, Sciences et Développement économique Canada pour fonctionner avec les types d'antenne énumérés ci-dessous et ayant un gain admissible maximal. Les types d'antenne non inclus dans cette liste, et dont le gain est supérieur au gain maximal indiqué pour tout type figurant sur la liste, sont strictement interdits pour l'exploitation de l'émetteur.

Manufacturer	Antenna connector	Antenna Type	MaxGain (dBi)	Impedance (Ω)
WNC	SMA	Dipole	2.15	50

本資料為啟碁科技股份有限公司專有之財產，非經書面許可，不准透露或使用本資料，亦不准複印，複製或轉變成其他形式使用。
The information contained herein is the exclusive property of WNC and shall not be distributed, reproduced, or disclosed in whole or in part without prior written permission from WNC.