Wistron NeWeb Corp.

# UMC-STD31LF
# Product Specification

CONFIDENTIAL

ALL RIGHTS RESERVED
This is an unpublished work. No part of this document may be copied, photocopied, reproduced, translated, or reduced to any electronic or machine-readable form without the prior permission of Wistron NeWeb Corps.

| | |
|---|---|
| **Document author:** | Darren |
| **Owner while current:** | Darren |
| **Retention period:** | Until Next Release |

本資料為啟碁科技股份有限公司專有之財產，非經書面許可，不准透露或使用本資料，亦不准複印，複製或轉變成其他形式使用。
The information contained herein is the exclusive property of WNC and shall not be distributed, reproduced, or disclosed in whole or in part without prior written permission from WNC.

| Revision | Revision Date | Revised By | Description |
|---|---|---|---|
| V1 | 2021/10/14 | Darren | First Release |

CONFIDENTIAL

1 General features .....5

本資料為啟碁科技股份有限公司專有之財產，非經書面許可，不准透露或使用本資料，亦不准複印，複製或轉變成其他形式使用。
The information contained herein is the exclusive property of WNC and shall not be distributed, reproduced, or disclosed in whole or in part without prior written permission from WNC.

1.1 Regional variant ....5
1.2 Performance key features....5
1.3 Interface....6
1.3.1 Signal interface ....6
1.3.2 GPIO ....6
1.3.3 Antenna interface ....6
1.3.4 Power input interface ....6
1.3.5 Power output interface....7
1.4 Operation condition....7
1.5 Mechanical specification....7

2 Block diagram....8
2.1 UMC-STD31LF block diagram....8
2.2 Software stack....9

3 Board placement....9
3.1 Top side....9
3.2 Bottom side....10
3.3 Pin diagram ....10
3.5 GPIO table ....24
3.5.1 Alternate Function ....24
3.5.2 Wake up/De-bounce....27

4 Mechanical design ....30
4.1 Shielding case design ....30
4.2 Label information....31
4.3 NAD land pattern ....32
4.4 Stencil opening....32
4.5 Reflow profile....33
4.6 Moisture sensitivity level ....33
4.7 ESD ....34
4.8 Packaging ....34

5 Thermal design....36
5.1 Thermal sensor ....36
5.2 Software thermal mitigation....37

6 RF specification ....38
6.1 UMC-STD31LF ....38
6.1.1 Maximum output power....38
6.1.2 Sensitivity limit....38

7 Evaluation Kit ....39

8 Design application notes....41
8.1 Power trace....41
8.2 Power ON/OFF and Reset ....41
8.2.1 Power ON ....41
8.2.2 Power OFF....41

CONFIDENTIAL

本資料為啟碁科技股份有限公司專有之財產，非經書面許可，不准透露或使用本資料，亦不准複印，複製或轉變成其他形式使用。
The information contained herein is the exclusive property of WNC and shall not be distributed, reproduced, or disclosed in whole or in part without prior written permission from WNC.

8.2.3 Reset ..... 41
8.3 USB2.0 ..... 42
8.4 USB2.0 OTG ..... 42
8.5 I2C ..... 42
8.6 RGMII ..... 42
8.7 MSDC ..... 43
8.7.1 Layout ..... 43
8.7.2 MSDC interface ..... 43
8.8 SIM ..... 43
8.8.1 Layout ..... 43
8.9 RF antenna port ..... 43
8.9.1 Antenna detection ..... 44
8.10 KPCOL0 ..... 45
8.11 IDDIG ..... 45
8.12 WATCHDOG ..... 45
8.13 SRCLKENA0 ..... 46
8.14 RTC_CLK ..... 46
8.15 Thermal ..... 46
9 Abbreviation ..... 47
10. Warning statement ..... 50
Federal Communication Commission Interference Statement: ..... 50
Radiation Exposure Statement: ..... 50
Industry Canada statement: ..... 52

CONFIDENTIAL

本資料為啟碁科技股份有限公司專有之財產，非經書面許可，不准透露或使用本資料，亦不准複印，複製或轉變成其他形式使用。
The information contained herein is the exclusive property of WNC and shall not be distributed, reproduced, or disclosed in whole or in part without prior written permission from WNC.

## 1 General features

UMC-STD31LF is the 254-pin contacting LGA type NAD(Network Access Device) with MTK 2731R/P which is dual-core high performance ARMOR Cortec-A53 MPCoreTM operating up to 1.46GHz SOC, can provide abundant application such as eCall, telephony,OTA,remote diagnostic,mobile phone link and etc. For the worldwide market, WNC has two regional variants that have dedicated RAT supporting band designed as below

NA for North America region
EU for Europe region

### 1.1 Regional variant

| RAT\Variant | EU | NA |
|---|---|---|
| GSM/EDGE/GPRS | 900 and 1800 | 850 and 1900 |
| WCDMA | B1/B3/B8 | B2/B5 |
| LTE | B1/B3/B7/B8/B20/B28 | B2/B4/B5/B7/B12/B17/B25/B26/B66/B71* |

*B71 support from D sample

### 1.2 Performance key features

| Key Features\Variant | EU | NA |
|---|---|---|
| M/N | UMC-STD31LFE | UMC-STD31LFN |
| Modem | MTK/MT2731V/RO | MTK/MT2731V/RO |
| Power Management | MTK/MT6389V/AOAMT | MTK/MT6389V/AOAMT |
| RF IC | MTK/MT6177AW/AOC | MTK/MT6177AW/AOC |
| Primary Antenna | GSM/LTE/WCDMA transmitting and receiving | GSM/LTE/WCDMA transmitting and receiving |
| Diversity Antenna | LTE; receiving only | LTE; receiving only |
| Maximum Data Rate | LTE Category 6 | LTE Category 6 |
| LTE Downlink CA(Intra) | Support | Support |
| LTE Downlink CA(Inter) | Not Supported | Not Supported |
| LTE Uplink CA | Not Supported | Not Supported |
| GNSS L1 | Not Supported | Not Supported |
| LTE Power Class | 3 | 3 |
| MCP | NAND: 8G bits LDDR4:8G bits | NAND: 8G bits LDDR4:8G bits |

本資料為啟碁科技股份有限公司專有之財產，非經書面許可，不准透露或使用本資料，亦不准複印，複製或轉變成其他形式使用。
The information contained herein is the exclusive property of WNC and shall not be distributed, reproduced, or disclosed in whole or in part without prior written permission from WNC.

## 1.3 Interface

### 1.3.1 Signal interface

UMC-STD31LF has signal interfaces as showed as below table. Developer could use these interfaces to communicate with NAD or debugging

| Interface | Amount | Description |
|---|---|---|
| PCIE | 1 set | MT2731R:RC mode/MT2731P: EP mode |
| USB 2.0 OTG | 1 set | support the device or the host mode |
| RGMII | 1 set | Support GbE |
| Audio(analog) | 2 sets | for the analog audio interface; consisting of two audio DACs with Mono data stream and two line-out drivers |
| UART | 1 sets | 2 sets with CTS/RTS pin |
| MSDC | 1 sets | 1 set with 8-bit data lines |
| JTAG | 1 set | for the firmware upgrade and the debugging |
| SIM | 2 sets | SIM interface,Support DSDS |
| ADC | 4 pins | ADC channel with 12-bit resolution |

### 1.3.2 GPIO

| Interface | Description |
|---|---|
| GPIO(1.8V) | 37 pins |
| GPIO(3.3V) | 18 pins |

### 1.3.3 Antenna interface

| Interface | Description |
|---|---|
| Primary Antenna | 1 pin for LTE/WCDMA/GSM primary transmitting and receiving |
| Diversity Antenna | 1 pin for LTE and WCDMA diversity receiving |

### 1.3.4 Power input interface

| Interface | Description |
|---|---|
| VSYS | 2 pins. NAD main supply voltage source |
| VBUS | 1 pin. 5.0V input for USB detection(typ 5V, max:10.5V |

CONFIDENTIAL

本資料為啟碁科技股份有限公司專有之財產，非經書面許可，不准透露或使用本資料，亦不准複印，複製或轉變成其他形式使用。
The information contained herein is the exclusive property of WNC and shall not be distributed, reproduced, or disclosed in whole or in part without prior written permission from WNC.

### 1.3.5 Power output interface

| Interface | Description |
|---|---|
| VEMC_PMU | 1 pin. 3.0V output, max current 800mA. For eMMC |
| VIO33_PMU | 1 pin. 3.3V output, max current 100mA. For I/O or sensors |
| VCN33_PMU | 1 pin. 3.3V output, max current 70mA. For Connectivity |
| VIO18_PMU | 1 pin. 1.8V output, max current 200mA. For I/O or sensors |
| VCN18_PMU | 1 pin. 1.8V output, max current 450mA. For Connectivity |
| VSIM1_PMU | 1 pin. 1.8V output, max current 140mA. As SIM1 supply-feed |
| VSIM2_PMU | 1 pin. 1.8V output, max current 140mA. |

## 1.4 Operation condition

| Parameter | Minimum | Typical | Maximum | Unit |
|---|---|---|---|---|
| Storage Temperature Range | -40 | - | 85 | °C |
| 3GPP RF Performance Temperature Range | -30 | - | 70 | °C |
| Operating Temperature Range | -40 | - | 85 | °C |
| E-call Temperature Range | | | 95 | °C |
| Power Supply Voltage(VSYS) | 3.8 | 4 | 4.2 | V |
| ESD Voltage(Human Body Model) | - | - | 2000 | V |
| ESD Voltage(Charge Device Model) | - | - | 500 | V |
| Operation Humidity | 0 | - | 95 | %RH |
| Current Consumption | | | | |
| Sleep(Airplane/Flight/Suspended mode) | - | 2.11 | | mA |
| GSM standby 1.18 sec | - | 2.56 | | mA |
| WCDMA standby | - | 2.56 | | mA |
| LTE FDD Standby 2.56 sec | - | 2.7 | | mA |
| GSM talk 11-dBm; no DTX, P-GSM | - | 159.42 | | mA |
| WCDMA talk 5-dBm; IMT | - | 216.72 | | mA |
| VoLTE FDD(40-ms DRX cycle/0-dBm) | - | 280 | | mA |
| LTE Cat 6(300/50-Mbps,5-dBm, Band7) | - | 368 | | mA |

## 1.5 Mechanical specification

| Parameter | Min | Typ. | Max | Unit |
|---|---|---|---|---|
| Length | 36.7 | 36.8 | 37.05 | mm |
| Width | 41.9 | 42 | 42.25 | mm |
| Height(with shielding case) | 2.93 | 3.23 | 3.53 | mm |
| Weight(with shielding case) | 9 | 10 | 11 | G |
| Module co-planarity | 0 | - | 100 | um |

本資料為啟碁科技股份有限公司專有之財產，非經書面許可，不准透露或使用本資料，亦不准複印，複製或轉變成其他形式使用。
The information contained herein is the exclusive property of WNC and shall not be distributed, reproduced, or disclosed in whole or in part without prior written permission from WNC.

# 2 Block diagram

## 2.1 UMC-STD31LF block diagram

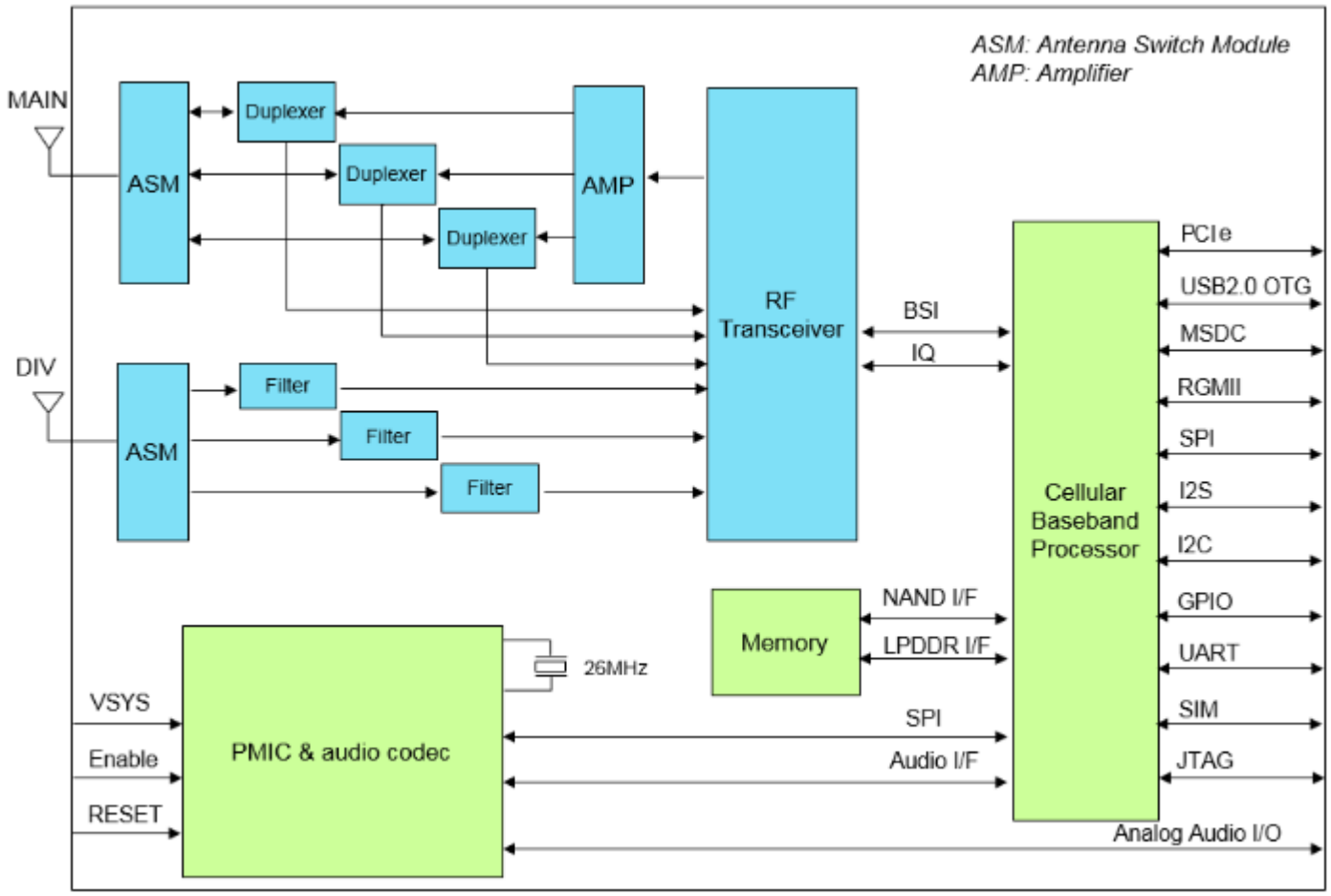


本資料為啟碁科技股份有限公司專有之財產，非經書面許可，不准透露或使用本資料，亦不准複印，複製或轉變成其他形式使用。
The information contained herein is the exclusive property of WNC and shall not be distributed, reproduced, or disclosed in whole or in part without prior written permission from WNC.

## 2.2 Software stack

Figure shows the software stack on MTK/MT2731 platform working on LINUX operation system which Kernel version is 4.14. For telephony, NAD supports not only voice calls but also SMS over CS and IMS

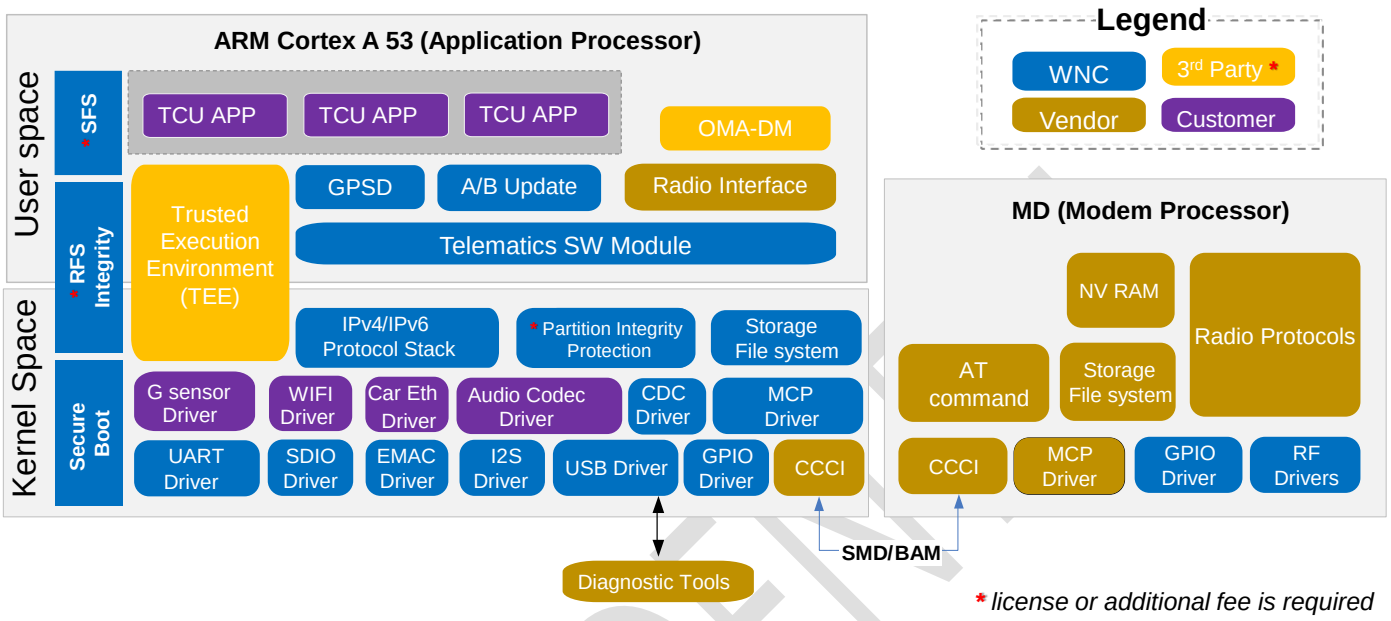


## 3 Board placement

### 3.1 Top side

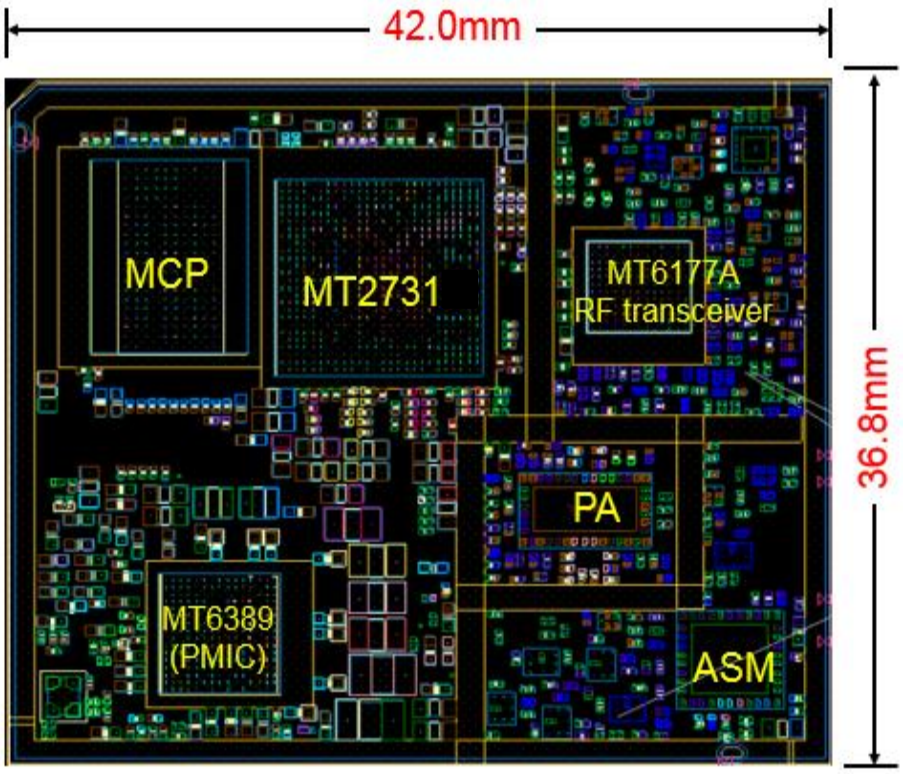


本資料為啟碁科技股份有限公司專有之財產，非經書面許可，不准透露或使用本資料，亦不准複印，複製或轉變成其他形式使用。
The information contained herein is the exclusive property of WNC and shall not be distributed, reproduced, or disclosed in whole or in part without prior written permission from WNC.

### 3.2 Bottom side

(Top to Bottom View)Round pads of LGA contacting

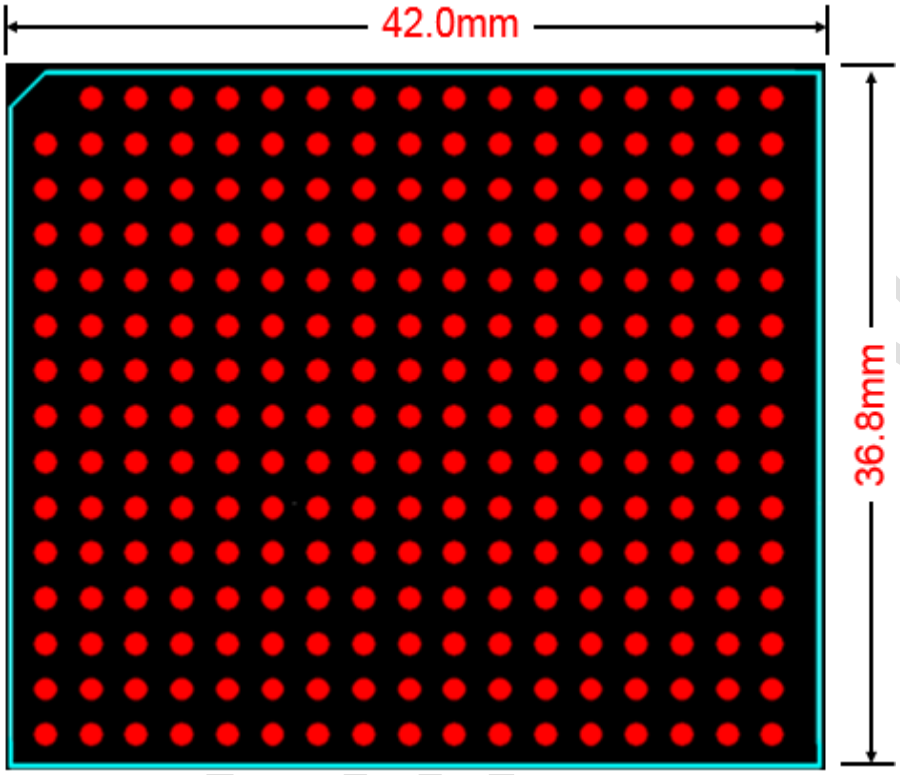


### 3.3 Pin diagram

Top to Bottom View(X-ray View)

本資料為啟碁科技股份有限公司專有之財產，非經書面許可，不准透露或使用本資料，亦不准複印，複製或轉變成其他形式使用。
The information contained herein is the exclusive property of WNC and shall not be distributed, reproduced, or disclosed in whole or in part without prior written permission from WNC.

| | 1 | 2 | 3 | 4 | 5 | 6 | 7 | 8 | 9 | 10 | 11 | 12 | 13 | 14 | 15 | 16 | 17 | |
|---|---|---|---|---|---|---|---|---|---|---|---|---|---|---|---|---|---|---|
| A | | GPIO46_1V8 | GND | SS_USB_TXP | SS_USB_TXN | SS_USB_RXN | SS_USB_RXP | GND | USB_DM_P1 | USB_DP_P1 | KPCOL0 | IDDIG | I2S0_MCK | GND | GPIO13_3V3 | GPIO1_1V8 | GPIO15_3V3 | A |
| B | MSDC0_RSTB | MSDC0_DSL | GPIO45_1V8 | GPIO44_1V8 | NC | NC | GND | USB_DM_P0 | USB_DP_P0 | GND | GPIO43_3V3 | GPIO28_1V8 | URTS2 | UCTS2 | GPIO14_3V3 | GND | GND | B |
| C | MSDC0_DAT7 | MSDC0_CLK | GND | I2S0_DI | MSDC2_CLK | MSDC2_DAT0 | MSDC2_DAT3 | MSDC2_DSL | GND | PCM_OUT | PCM_CLK | PCM_SYNC | URXD2 | UTXD2 | SPI_CLK_3V3 | GND | ANT_DRX | C |
| D | MSDC0_DAT5 | MSDC0_CMD | UTXD0 | URXD0 | MSDC2_CMD | MSDC2_DAT2 | GND | MSDC1_DAT1 | MSDC1_DAT3 | SDA0 | PCM_IN | GND | GND | GND | GPIO0_1V8 | GND | GND | D |
| E | MSDC0_DAT6 | MSDC0_DAT2 | GPIO18_1V8 | GPIO19_1V8 | MSDC2_DAT1 | TEMP_URXD | TEMP_UTXD | MSDC1_CMD | MSDC1_DAT0 | GND | SCL0 | GND | GND | GND | GND | META_MODE | GPIO8_1V8 | E |
| F | MSDC0_DAT0 | MSDC0_DAT3 | I2S0_BCK | I2S0_LRCK | I2S0_DO | AGPS_SYNC | GND | GND | MSDC1_DAT2 | MSDC1_CLK | LTE_COEX_TX_1V8 | LTE_COEX_RX_1V8 | GND | GND | GND | SPI1_A_CS1A | SPI1_A_MO | F |
| G | GND | MSDC0_DAT1 | MSDC0_DAT4 | GND | GPIO132_3V3 | GND | GND | GND | GPIO11_1V8 | GPIO10_1V8 | GND | GPIO2_1V8 | GPIO9_1V8 | GND | JTMS | JTRSTB | SPI1_A_MI | G |
| H | GPIO119_3V3 | GPIO117_3V3 | GPIO124_3V3 | GPIO129_3V3 | GPIO130_3V3 | GND | SYSRSTB | GND | GPIO12_1V8 | GPIO90_1V8 | GND | GND | GND | JTDI | JTDO | JTCK | GND | H |
| J | GPIO118_3V3 | GPIO127_3V3 | GPIO116_3V3 | GPIO128_3V3 | GPIO133_3V3 | GPIO123_3V3 | GND | GND | GPIO88_1V8 | GPIO87_1V8 | GND | GND | GND | GND | GND | GND | GND | J |
| K | VEMC_PMU | GND | GND | GPIO122_3V3 | GPIO126_3V3 | GPIO121_3V3 | GPIO131_3V3 | GND | GND | GPIO89_1V8 | GND | GND | GND | GND | GND | AUXADC_VIN2 | GND | K |
| L | GND | VIO33_PMU | VSIM1_PMU | VBUS | GPIO125_3V3 | GPIO120_3V3 | GND | GPI146_3V3 | GND | GND | GND | GND | GND | GND | GND | GND | GND | L |
| M | VCN33_PMU | VSIM2_PMU | VRTC28 | GND | GND | GND | WATCHDOG | PMIC_STATUS_B | GND | GND | GND | GND | GND | GND | GND | GND | GND | M |
| N | VIO18_PMU | AUDIO_IN2_P | GND | GND | GND | GND | SRCLKENA0 | GND | GND | SIM2_SIO | GND | UTXD1 | GND | GND | GND | GND | ANT_PTRX | N |
| P | AUDIO_IN1_N | AUDIO_IN2_N | AUDIO_OUT2_N | AUDIO_OUT2_P | GND | PMIC_ENB | PMIC_RESET_B | GND | SIM2_SCLK | SIM2_SRST | URXD1 | UCTS1 | GND | GND | GND | GND | GND | P |
| Q | AUDIO_IN1_P | AUDIO_OUT1_N | AUDIO_OUT1_P | VCN18_PMU | GND | VSYS | VSYS | GND | SIM1_SIO | SIM1_SCLK | SIM1_SRST | URTS1 | RTC_CLK | AUXADC_VIN4 | AUXADC_VIN6 | AUXADC_VIN8 | GND | Q |
| | 1 | 2 | 3 | 4 | 5 | 6 | 7 | 8 | 9 | 10 | 11 | 12 | 13 | 14 | 15 | 16 | 17 | |

本資料為啟碁科技股份有限公司專有之財產，非經書面許可，不准透露或使用本資料，亦不准複印，複製或轉變成其他形式使用。
The information contained herein is the exclusive property of WNC and shall not be distributed, reproduced, or disclosed in whole or in part without prior written permission from WNC.

## 3.4 Pin definition table

NC: No Connection
PD: Pull Down
PU: Pull Up

NOTE1 All unused pins should be assigned as “No Connection” on the application board
NOTE2 Internal pull-up/pull-up resistor of GPIO pins in MT2731
Type1 I/O：Internal resistance could be 3 options (10k-OHM, 50K-OHM, and 10K-OHM||50K-OHM) so far for GPIO30~36, GPIO59~64,GPIO110~115, GPIO134~145.
Type2 I/O：75K-OHM is a typical value (in the range of 40K-OHM~190K-OHM) for others I/O that cannot be configured to different resistance.

NOTE(*) In the specified software(Part#: 53tbc), NAD pin#L8 is no longer being a GPI pin as default and configured as ”MCU_RESET_B” to support following reset function
This pin is triggered high to close application software firstly, and then to do the reset of PMIC for rebooting NAD after the power-off/-on sequence
*GO1-GO55, Please read the table 3.5.1/3.5.2 (GO: Go through IO function)

| NAD Pin# | Symbol Name | Power Domain | Voltage | Internal Pull State | MT2731 Pin-out | GPIO | Description |
|---|---|---|---|---|---|---|---|
| A2 | PCIE_PERST_N | DVDD18 | 1.8V | PD | F22 | GPIO46 | PCIe |
| A3 | GND | | | | n/a | | |
| A4 | PCIE_LN0_TXP | AVDD18_PCIE | 1.8V | | D26 | | PCIe |
| A5 | PCIE_LN0_TXN | AVDD18_PCIE | 1.8V | | D25 | | PCIe |
| A6 | PCIE_LN0_RXN | AVDD18_PCIE | 1.8V | | G25 | | PCIe |
| A7 | PCIE_LN0_RXP | AVDD18_PCIE | 1.8V | | G26 | | PCIe |
| A8 | GND | | | | n/a | | |
| A9 | NC | | | | J25 | | |
| A10 | NC | | | | J24 | | |
| A11 | KPCOL0 | DVDD18 | 1.8V | PU | AD23 | GPIO58 | Pull this pin low to force NAD being USB Download Mode for the software upgrade |
| A12 | IDDIG | DVDD18 | 1.8V | PD | P26 | GPIO25 | ID pin of USB 2.0 OTG interface |

本資料為啟碁科技股份有限公司專有之財產，非經書面許可，不准透露或使用本資料，亦不准複印，複製或轉變成其他形式使用。
The information contained herein is the exclusive property of WNC and shall not be distributed, reproduced, or disclosed in whole or in part without prior written permission from WNC.

| | | | | | | | |
|---|---|---|---|---|---|---|---|
| A13 | GPIO24_1V8 | DVDD18 | 1.8V | PD | N26 | GPIO24 | GO1 |
| A14 | GND | | | | n/a | | |
| A15 | GPIO13_3V3 | DVDD28 | 3.3V | PD | AA24 | GPIO13 | GO2 |
| A16 | GPIO1_1V8 | DVDD18 | 1.8V | PD | M26 | GPIO1 | GO3 |
| A17 | GPIO15_3V3 | DVDD28 | 3.3V | PD | AB24 | GPIO15 | GO4 |
| B1 | MSDC0_RSTB | DVDD18 | 1.8V | PU | G3 | GPIO140 | 8-bits SDIO for eMMC |
| B2 | MSDC0_DSL | DVDD18 | 1.8V | PD | F5 | GPIO137 | 8-bits SDIO for eMMC |
| B3 | PCIE_WAKE_N | DVDD18 | 1.8V | PD | G23 | GPIO45 | PCIe |
| B4 | PCIE_CLKREQ_N | DVDD18 | 1.8V | PD | G22 | GPIO44 | PCIe |
| B5 | PCIE_CLKN | AVDD18_PCIE | 1.8V | | E24 | | PCIe |
| B6 | PCIE_CLKP | AVDD18_PCIE | 1.8V | | F24 | | PCIe |
| B7 | GND | | | | n/a | | |
| B8 | USB_DM_P0 | AVDD33_USB | 3.3V | | K26 | | USB 2.0 OTG differential pair signal |
| B9 | USB_DP_P0 | AVDD33_USB | 3.3V | | K25 | | USB 2.0 OTG differential pair signal |
| B10 | GND | | | | n/a | | |
| B11 | GPIO43_3V3 | DVDD28 | 3.3V | PD | Y24 | GPIO43 | GO5 |
| B12 | GPIO28_1V8 | DVDD18 | 1.8V | PD | P25 | GPIO28 | GO6 |
| B13 | GPIO49_3V3 | DVDD28 | 3.3V | PD | AA22 | GPIO49 | GO7 |
| B14 | GPIO47_3V3 | DVDD28 | 3.3V | PD | AA23 | GPIO47 | GO8 |
| B15 | GPIO14_3V3 | DVDD28 | 3.3V | PD | AB25 | GPIO14 | GO9 |

本資料為啟碁科技股份有限公司專有之財產，非經書面許可，不准透露或使用本資料，亦不准複印，複製或轉變成其他形式使用。
The information contained herein is the exclusive property of WNC and shall not be distributed, reproduced, or disclosed in whole or in part without prior written permission from WNC.

| | | | | | | | |
|---|---|---|---|---|---|---|---|
| B16 | GND | | | | n/a | | |
| B17 | GND | | | | n/a | | |
| C1 | MSDC0_DAT7 | DVDD18 | 1.8V | PU | J2 | GPIO136 | 8-bits SDIO for eMMC |
| C2 | MSDC0_CLK | DVDD18 | 1.8V | PD | H6 | GPIO138 | 8-bits SDIO for eMMC |
| C3 | GND | | | | n/a | | |
| C4 | GPIO22_1V8 | DVDD18 | 1.8V | PD | N25 | GPIO22 | GO16 |
| C5 | GPIO31_1V8 | DVDD18 | 1.8V | PD | R25 | GPIO31 | GO17 |
| C6 | GPIO36_1V8 | DVDD18 | 1.8V | PD | U24 | GPIO36 | GO18 |
| C7 | GPIO33_1V8 | DVDD18 | 1.8V | PD | V26 | GPIO33 | GO19 |
| C8 | GPIO30_1V8 | DVDD18 | 1.8V | PD | R24 | GPIO30 | GO20 |
| C9 | GND | | | | n/a | | |
| C10 | GPIO40_3V3 | DVDD28 | 3.3V | PU | Y25 | GPIO40 | GO10 |
| C11 | GPIO37_3V3 | DVDD28 | 3.3V | PU | Y23 | GPIO37 | GO11 |
| C12 | GPIO38_3V3 | DVDD28 | 3.3V | PU | W23 | GPIO38 | GO12 |
| C13 | GPIO48_3V3 | DVDD28 | 3.3V | PD | AC23 | GPIO48 | GO13 |
| C14 | GPIO50_3V3 | DVDD28 | 3.3V | PD | AB22 | GPIO50 | GO14 |
| C15 | GPIO7_3V3 | DVDD28 | 3.3V | PD | AC25 | GPIO7 | GO15 |
| C16 | GND | | | | n/a | | |
| C17 | ANT_DRX | | | | | | RF diversity antenna port |
| D1 | MSDC0_DAT5 | DVDD18 | 1.8V | PU | F2 | GPIO135 | 8-bits SDIO for eMMC |
| D2 | MSDC0_CMD | DVDD18 | 1.8V | PU | H5 | GPIO142 | 8-bits SDIO for eMMC |
| D3 | UTXD0(Debug) | DVDD18 | 1.8V | PU | L24 | GPIO17 | UART interface signal |

本資料為啟碁科技股份有限公司專有之財產，非經書面許可，不准透露或使用本資料，亦不准複印，複製或轉變成其他形式使用。
The information contained herein is the exclusive property of WNC and shall not be distributed, reproduced, or disclosed in whole or in part without prior written permission from WNC.

| | | | | | | | |
|---|---|---|---|---|---|---|---|
| D4 | URXD0(Debug) | DVDD18 | 1.8V | PU | L23 | GPIO16 | UART interface signal |
| D5 | GPIO32_1V8 | DVDD18 | 1.8V | PD | T24 | GPIO32 | GO24 |
| D6 | GPIO34_1V8 | DVDD18 | 1.8V | PD | V25 | GPIO34 | GO25 |
| D7 | GND | | | | n/a | | |
| D8 | GPIO62_1V8 | DVDD18 | 1.8V | PD | AC19 | GPIO62 | GO26 |
| D9 | GPIO60_1V8 | DVDD18 | 1.8V | PD | AF20 | GPIO60 | GO27 |
| D10 | GPIO41_3V3 | DVDD28 | 3.3V | PU | Y22 | GPIO41 | GO21 |
| D11 | GPIO39_3V3 | DVDD28 | 3.3V | PU | Y26 | GPIO39 | GO22 |
| D12 | GND | | | | n/a | | |
| D13 | GND | | | | n/a | | |
| D14 | GND | | | | n/a | | |
| D15 | GPIO0_1V8 | DVDD18 | 1.8V | PU | M25 | GPIO0 | GO23 |
| D16 | GND | | | | n/a | | |
| D17 | GND | | | | n/a | | |
| E1 | MSDC0_DAT6 | DVDD18 | 1.8V | PU | H1 | GPIO134 | 8-bits SDIO for eMMC |
| E2 | MSDC0_DAT2 | DVDD18 | 1.8V | PU | H2 | GPIO143 | 8-bits SDIO for eMMC |
| E3 | GPIO18_1V8 | DVDD18 | 1.8V | PD | M24 | GPIO18 | GO30 |
| E4 | GPIO19_1V8 | DVDD18 | 1.8V | PD | M23 | GPIO19 | GO31 |
| E5 | GPIO35_1V8 | DVDD18 | 1.8V | PD | U25 | GPIO35 | GO32 |
| E6 | GPIO27_1V8 | DVDD18 | 1.8V | PD | T22 | GPIO27 | GO33 |
| E7 | GPIO26_1V8 | DVDD18 | 1.8V | PD | T21 | GPIO26 | GO34 |
| E8 | GPIO59_1V8 | DVDD18 | 1.8V | PD | AD20 | GPIO59 | GO35 |
| E9 | GPIO63_1V8 | DVDD18 | 1.8V | PD | AD19 | GPIO63 | GO36 |

本資料為啟碁科技股份有限公司專有之財產，非經書面許可，不准透露或使用本資料，亦不准複印，複製或轉變成其他形式使用。
The information contained herein is the exclusive property of WNC and shall not be distributed, reproduced, or disclosed in whole or in part without prior written permission from WNC.

| | | | | | | | |
|---|---|---|---|---|---|---|---|
| E10 | GND | | | | n/a | | |
| E11 | GPIO42_3V3 | DVDD28 | 3.3V | PU | W21 | GPIO42 | GO28 |
| E12 | GND | | | | n/a | | |
| E13 | GND | | | | n/a | | |
| E14 | GND | | | | n/a | | |
| E15 | GND | | | | n/a | | |
| E16 | META_MODE | DVDD18 | 1.8V | PD | AE23 | GPIO3 | Before and after NAD power-on-booting/rebooting, pull this pin low to force NAD being META Mode for connecting META tool |
| E17 | GPIO8_1V8 | DVDD18 | 1.8V | PD | AF23 | GPIO8 | GO29 |
| F1 | MSDC0_DAT0 | DVDD18 | 1.8V | PU | F1 | GPIO141 | 8-bits SDIO for eMMC |
| F2 | MSDC0_DAT3 | DVDD18 | 1.8V | PU | F4 | GPIO139 | 8-bits SDIO for eMMC |
| F3 | GPIO20_1V8 | DVDD18 | 1.8V | PD | P23 | GPIO20 | GO40 |
| F4 | GPIO21_1V8 | DVDD18 | 1.8V | PD | N24 | GPIO21 | GO41 |
| F5 | GPIO23_1V8 | DVDD18 | 1.8V | PD | N23 | GPIO23 | GO42 |
| F6 | AGPS_SYNC | DVDD18 | 1.8V | PD | R23 | GPIO29 | AGPS interface |
| F7 | GND | | | | n/a | | |
| F8 | GND | | | | n/a | | |
| F9 | GPIO61_1V8 | DVDD18 | 1.8V | PD | AE20 | GPIO61 | GO43 |
| F10 | GPIO64_1V8 | DVDD18 | 1.8V | PD | AE19 | GPIO64 | GO37 |
| F11 | LTE_COEX_TX_1V8 | DVDD18 | 1.8V | PD | V23 | GPIO56 | Reserved interface for IDC connection of WLAN IC |
| F12 | LTE_COEX_RX_1V8 | DVDD18 | 1.8V | PD | V22 | GPIO57 | Reserved interface for IDC connection of WLAN IC |
| F13 | GND | | | | n/a | | |

本資料為啟碁科技股份有限公司專有之財產，非經書面許可，不准透露或使用本資料，亦不准複印，複製或轉變成其他形式使用。
The information contained herein is the exclusive property of WNC and shall not be distributed, reproduced, or disclosed in whole or in part without prior written permission from WNC.

| | | | | | | | |
|---|---|---|---|---|---|---|---|
| F14 | GND | | | | n/a | | |
| F15 | GND | | | | n/a | | |
| F16 | GPIO6_3V3 | DVDD28 | 3.3V | PD | AC26 | GPIO6 | GO38 |
| F17 | GPIO5_3V3 | DVDD28 | 3.3V | PD | AD25 | GPIO5 | GO39 |
| G1 | GND | | | | n/a | | |
| G2 | MSDC0_DAT1 | DVDD18 | 1.8V | PU | G2 | GPIO145 | 8-bits SDIO for eMMC |
| G3 | MSDC0_DAT4 | DVDD18 | 1.8V | PU | F3 | GPIO144 | 8-bits SDIO for eMMC |
| G4 | GND | | | | n/a | | |
| G5 | GBE_COL | DVDD28 | 3.3V | PD | L2 | GPIO132 | GbE |
| G6 | GND | | | | n/a | | |
| G7 | GND | | | | n/a | | |
| G8 | GND | | | | n/a | | |
| G9 | MCU_WU_NAD | DVDD18 | 1.8V | PD | AB2 | GPIO11 | MCU wake up NAD from sleep mode |
| G10 | GPIO10_1V8 | DVDD18 | 1.8V | PD | AC4 | GPIO10 | GO44 |
| G11 | GND | | | | n/a | | |
| G12 | GPIO2_1V8 | DVDD18 | 1.8V | PD | V21 | GPIO2 | GO45 |
| G13 | NAD_WU_MCU | DVDD18 | 1.8V | PD | AE18 | GPIO9 | NAD wake up MCU,when got SMS/Call |
| G14 | GND | | | | n/a | | |
| G15 | JTMS | DVDD18 | 1.8V | PD | AE25 | GPIO51 | JTAG debugging interface |
| G16 | JTRSTB | DVDD18 | 1.8V | PD | AC24 | GPIO55 | JTAG debugging interface |
| G17 | GPIO4_3V3 | DVDD28 | 3.3V | PD | AD26 | GPIO4 | GO46 |
| H1 | GBE_TXD0 | DVDD28 | 3.3V | PD | N5 | GPIO119 | GbE |
| H2 | GBE_TXD2 | DVDD28 | 3.3V | PD | M4 | GPIO117 | GbE |
| H3 | GBE_TXC | DVDD28 | 3.3V | PD | L4 | GPIO124 | GbE |

本資料為啟碁科技股份有限公司專有之財產，非經書面許可，不准透露或使用本資料，亦不准複印，複製或轉變成其他形式使用。
The information contained herein is the exclusive property of WNC and shall not be distributed, reproduced, or disclosed in whole or in part without prior written permission from WNC.

| | | | | | | | |
|---|---|---|---|---|---|---|---|
| H4 | GBE_MDIO | DVDD28 | 3.3V | PD | L3 | GPIO129 | GbE |
| H5 | GBE_TXER | DVDD28 | 3.3V | PD | M2 | GPIO130 | GbE |
| H6 | GND | | | | n/a | | |
| H7 | SYSRSTB | | 0 to 1.98V | | PMIC | | For internal debugging |
| H8 | GND | | | | n/a | | |
| H9 | GPIO12_1V8 | DVDD18 | 1.8V | PD | Y5 | GPIO12 | GO48 |
| H10 | GPIO90_1V8 | DVDD18 | 1.8V | PD | AE4 | GPIO90 | GO47 |
| H11 | GND | | | | n/a | | |
| H12 | GND | | | | n/a | | |
| H13 | GND | | | | n/a | | |
| H14 | JTDI | DVDD18 | 1.8V | PD | AE24 | GPIO53 | JTAG debugging interface |
| H15 | JTDO | DVDD18 | 1.8V | PD | AF24 | GPIO54 | JTAG debugging interface |
| H16 | JTCK | DVDD18 | 1.8V | PD | AD24 | GPIO52 | JTAG debugging interface |
| H17 | GND | | | | n/a | | |
| J1 | GBE_TXD1 | DVDD28 | 3.3V | PD | N4 | GPIO118 | GbE |
| J2 | GBE_TXEN | DVDD28 | 3.3V | PD | N3 | GPIO127 | GbE |
| J3 | GBE_TXD3 | DVDD28 | 3.3V | PD | M1 | GPIO116 | GbE |
| J4 | GBE_MDC | DVDD28 | 3.3V | PD | K3 | GPIO128 | GbE |
| J5 | GBE_INTR | DVDD28 | 3.3V | PD | K2 | GPIO133 | GbE |
| J6 | GBE_RXD0 | DVDD28 | 3.3V | PD | P1 | GPIO123 | GbE |
| J7 | GND | | | | n/a | | |
| J8 | GND | | | | n/a | | |
| J9 | GPIO88_1V8 | DVDD18 | 1.8V | PD | AB5 | GPIO88 | GO50 |
| J10 | GPIO87_1V8 | DVDD18 | 1.8V | PD | AB6 | GPIO87 | GO49 |
| J11 | GND | | | | n/a | | |
| J12 | GND | | | | n/a | | |

本資料為啟碁科技股份有限公司專有之財產，非經書面許可，不准透露或使用本資料，亦不准複印，複製或轉變成其他形式使用。
The information contained herein is the exclusive property of WNC and shall not be distributed, reproduced, or disclosed in whole or in part without prior written permission from WNC.

| | | | | | | | |
|---|---|---|---|---|---|---|---|
| J13 | GND | | | | n/a | | |
| J14 | GND | | | | n/a | | |
| J15 | GND | | | | n/a | | |
| J16 | GND | | | | n/a | | |
| J17 | GND | | | | n/a | | |
| K1 | VEMC_PMU | | 3.0V | | PMIC | | 3.0-Voltage source of the external eMMC; the maximum supply current is 800mA |
| K2 | GND | | | | n/a | | |
| K3 | GND | | | | n/a | | |
| K4 | GBE_RXD1 | DVDD28 | 3.3V | PD | P2 | GPIO122 | GbE |
| K5 | GBE_RXDV | DVDD28 | 3.3V | PD | P3 | GPIO126 | GbE |
| K6 | GBE_RXD2 | DVDD28 | 3.3V | PD | R2 | GPIO121 | GbE |
| K7 | GBE_RXER | DVDD28 | 3.3V | PD | R3 | GPIO131 | GbE |
| K8 | GND | | | | n/a | | |
| K9 | GND | | | | n/a | | |
| K10 | GPIO89_1V8 | DVDD18 | 1.8V | PD | AF4 | GPIO89 | GO51 |
| K11 | GND | | | | n/a | | |
| K12 | GND | | | | n/a | | |
| K13 | GND | | | | n/a | | |
| K14 | GND | | | | n/a | | |
| K15 | GND | | | | n/a | | |
| K16 | AUXADC_VIN2 | | 0 to 1.98V | | PMIC | | PMIC ADC input with 12-bit A-to-D resolution |
| K17 | GND | | | | n/a | | |
| L1 | GND | | | | n/a | | |
| L2 | VIO33_PMU | | 3.3V | | PMIC | | 3.3-Voltage output source; the maximum supply current is 100-mA |

本資料為啟碁科技股份有限公司專有之財產，非經書面許可，不准透露或使用本資料，亦不准複印，複製或轉變成其他形式使用。
The information contained herein is the exclusive property of WNC and shall not be distributed, reproduced, or disclosed in whole or in part without prior written permission from WNC.

| | | | | | | | |
|---|---|---|---|---|---|---|---|
| L3 | VSIM1_PMU | | 1.8V | | PMIC | | 1.8-Volatge source of SIM1; the maximum supply current is 140-mA |
| L4 | VBUS | | | | PMIC | | PMIC input pin for USB detection. In Sleep Mode, VBUS should be disconnected with NAD |
| L5 | GBE_RXC | DVDD28 | 3.3V | PD | P5 | GPIO125 | GbE |
| L6 | GBE_RXD3 | DVDD28 | 3.3V | PD | R4 | GPIO120 | GbE |
| L7 | GND | | | | n/a | | |
| L8 | MCU_RESET_B | DVDD28 | 3.3V | PD | T3 | GPIO146 | This pin only offers the **input** function and is not able to be configured as the output pin |
| L8* | MCU_RESET_B | DVDD28 | 3.3V | PD | T3 | GPIO146 | This pin is triggered low to close application software firstly, and then to do the reset of PMIC for rebooting NAD after the power-off/-on sequence |
| L9 | GND | | | | n/a | | |
| L10 | GND | | | | n/a | | |
| L11 | GND | | | | n/a | | |
| L12 | GND | | | | n/a | | |
| L13 | GND | | | | n/a | | |
| L14 | GND | | | | n/a | | |
| L15 | GND | | | | n/a | | |
| L16 | GND | | | | n/a | | |
| L17 | GND | | | | n/a | | |
| M1 | VCN33_PMU | | 3.3V | | PMIC | | 3.3-Voltage output source reserved for MT6630; the maximum supply current is 70-mA |
| M2 | VSIM2_PMU | | 1.8V | | PMIC | | 1.8-Volatge source of SIM2; the maximum supply current is 140-mA |

本資料為啟碁科技股份有限公司專有之財產，非經書面許可，不准透露或使用本資料，亦不准複印，複製或轉變成其他形式使用。
The information contained herein is the exclusive property of WNC and shall not be distributed, reproduced, or disclosed in whole or in part without prior written permission from WNC.

| | | | | | | | |
|---|---|---|---|---|---|---|---|
| M3 | VRTC28 | | 2.8V | | PMIC | | 2.8-Voltage source of RTC; the maximum supply current is 2-mA |
| M4 | GND | | | | n/a | | |
| M5 | GND | | | | n/a | | |
| M6 | GND | | | | n/a | | |
| M7 | WATCHDOG | DVDD18 | 1.8V | PU | AD4 | GPIO92 | WATCHDOG trigger signal generated from MT2731,Customer don't need to control it |
| M8 | PMIC_STATUS_B | | 0 to 5V | | PMIC | | When NAD system completed the booting up, PMIC will pull this pin low not only to inform MT2731 that PMIC is ready, but also as the outgoing status pin reporting NAD booting is ended.This pin would be also connected to VSYS with the external pull-up resistor of 100K-OHM |
| M9 | GND | | | | n/a | | |
| M10 | GND | | | | n/a | | |
| M11 | GND | | | | n/a | | |
| M12 | GND | | | | n/a | | |
| M13 | GND | | | | n/a | | |
| M14 | GND | | | | n/a | | |
| M15 | GND | | | | n/a | | |
| M16 | GND | | | | n/a | | |
| M17 | GND | | | | n/a | | |
| N1 | VIO18_PMU | | 1.8V | | PMIC | | 1.8V output source; the maximum supply current is 200-mA |
| N2 | AUDIO_IN2_P | | -1.5 to 1.5V | | PMIC | | Analog AUDIO Channel2 differential input pair(P/N); the minimum impedance loading at input is 7K-OHM |
| N3 | GND | | | | n/a | | |
| N4 | GND | | | | n/a | | |

本資料為啟碁科技股份有限公司專有之財產，非經書面許可，不准透露或使用本資料，亦不准複印，複製或轉變成其他形式使用。
The information contained herein is the exclusive property of WNC and shall not be distributed, reproduced, or disclosed in whole or in part without prior written permission from WNC.

| | | | | | | | |
|---|---|---|---|---|---|---|---|
| N5 | GND | | | | n/a | | |
| N6 | GND | | | | n/a | | |
| N7 | SRCLKENA0 | DVDD18 | 1.8V | PU | AA1 | GPIO104 | NAD status indicator; the state of HIGH for Normal Mode, as well as LOW for Sleep/Low Power Mode |
| N8 | GND | | | | n/a | | |
| N9 | GND | | | | n/a | | |
| N10 | SIM2_SIO | DVDD28_SIM2 | 3.3V | PU | U1 | GPIO110 | SIM2 interface signal |
| N11 | GND | | | | n/a | | |
| N12 | GPIO93_1V8 | DVDD18 | 1.8V | PD | AE3 | GPIO93 | GO52 |
| N13 | GND | | | | n/a | | |
| N14 | GND | | | | n/a | | |
| N15 | GND | | | | n/a | | |
| N16 | GND | | | | n/a | | |
| N17 | ANT_PTRX | | | | | | RF primary antenna port |
| P1 | AUDIO_IN1_N | | -1.5 to 1.5V | | PMIC | | Analog AUDIO Channel1 differential input pair(P/N); the minimum impedance loading at input is 7K-OHM |
| P2 | AUDIO_IN2_N | | -1.5 to 1.5V | | PMIC | | Analog AUDIO Channel2 differential input pair(P/N); the minimum impedance loading at input is 7K-OHM |
| P3 | AUDIO_OUT2_N | | -1.98V to 1.98V | | PMIC | | Analog AUDIO Channel2 differential output pair(P/N); the output loading is 10K-OHM w/ 1.58Vrms |
| P4 | AUDIO_OUT2_P | | -1.98V to 1.98V | | PMIC | | Analog AUDIO Channel2 differential output pair(P/N); the output loading is 10K-OHM w/ 1.58Vrms |

本資料為啟碁科技股份有限公司專有之財產，非經書面許可，不准透露或使用本資料，亦不准複印，複製或轉變成其他形式使用。
The information contained herein is the exclusive property of WNC and shall not be distributed, reproduced, or disclosed in whole or in part without prior written permission from WNC.

| | | | | | | | |
|---|---|---|---|---|---|---|---|
| P5 | GND | | | | PMIC | | |
| P6 | PMIC_ENB | | 0 to 5V | | PMIC | | Pull this pin low to power NAD on |
| P7 | PMIC_RESET_B | | 0 to 5V | | PMIC | | Hardware reset, to pull this pin low to trigger the reset of PMIC for rebooting NAD after the power-off/-on sequence |
| P8 | GND | | | | n/a | | |
| P9 | SIM2_SCLK | DVDD28_SIM2 | 3.3V | PD | U2 | GPIO112 | SIM2 interface signal |
| P10 | SIM2_SRST | DVDD28_SIM2 | 3.3V | PD | V2 | GPIO111 | SIM2 interface signal |
| P11 | GPIO94_1V8 | DVDD18 | 1.8V | PD | AF2 | GPIO94 | GO53 |
| P12 | GPIO95_1V8 | DVDD18 | 1.8V | PD | AF3 | GPIO95 | GO54 |
| P13 | GND | | | | n/a | | |
| P14 | GND | | | | n/a | | |
| P15 | GND | | | | n/a | | |
| P16 | GND | | | | n/a | | |
| P17 | GND | | | | n/a | | |
| Q1 | AUDIO_IN1_P | | -1.5 to 1.5V | | PMIC | | Analog AUDIO Channel1 differential input pair(P/N); the minimum impedance loading at input is 7K-OHM |
| Q2 | AUDIO_OUT1_N | | -1.98V to 1.98V | | PMIC | | Analog AUDIO Channel1 differential output pair(P/N); the output loading is 10K-OHM w/ 1.58Vrms |
| Q3 | AUDIO_OUT1_P | | -1.98V to 1.98V | | PMIC | | Analog AUDIO Channel1 differential output pair(P/N); the output loading is 10K-OHM w/ 1.58Vrms |

本資料為啟碁科技股份有限公司專有之財產，非經書面許可，不准透露或使用本資料，亦不准複印，複製或轉變成其他形式使用。
The information contained herein is the exclusive property of WNC and shall not be distributed, reproduced, or disclosed in whole or in part without prior written permission from WNC.

| | | | | | | | |
|---|---|---|---|---|---|---|---|
| Q4 | VCN18_PMU | | 1.8V | | PMIC | | 1.8V output source reserved for MT6630; the maximum supply current is 450-mA |
| Q5 | GND | | | | n/a | | |
| Q6 | VSYS | | 4V | | PMIC | | System supply-feed power of NAD |
| Q7 | VSYS | | 4V | | PMIC | | |
| Q8 | GND | | | | n/a | | |
| Q9 | SIM1_SIO | DVDD28_SIM1 | 3.3V | PU | U4 | GPIO113 | SIM1 interface signal |
| Q10 | SIM1_SCLK | DVDD28_SIM1 | 3.3V | PD | V4 | GPIO115 | SIM1 interface signal |
| Q11 | SIM1_SRST | DVDD28_SIM1 | 3.3V | PD | V3 | GPIO114 | SIM1 interface signal |
| Q12 | GPIO96_1V8 | DVDD18 | 1.8V | PD | AE2 | GPIO96 | GO55 |
| Q13 | RTC_CLK | | 0 to 1.98V | | PMIC | | 32.768-KHz clock signal generated from PMIC |
| Q14 | AUXADC_VIN4 | | 0 to 1.98V | | PMIC | | PMIC ADC input with 12-bit A-to-D resolution |
| Q15 | AUXADC_VIN6 | | 0 to 1.98V | | PMIC | | PMIC ADC input with 12-bit A-to-D resolution |
| Q16 | AUXADC_VIN8 | | 0 to 1.98V | | PMIC | | PMIC ADC input with 12-bit A-to-D resolution |
| Q17 | GND | | | | n/a | | |

## 3.5 GPIO table

### 3.5.1 Alternate Function

Table below shows available GPIO pins can be set into different function,customer can choose related function according to the table. Before implementing them into real design, need to confirm with WNC.

I：input IO pad. O：output IO pad. B: bidirectional IO pad(Input and output).

本資料為啟碁科技股份有限公司專有之財產，非經書面許可，不准透露或使用本資料，亦不准複印，複製或轉變成其他形式使用。
The information contained herein is the exclusive property of WNC and shall not be distributed, reproduced, or disclosed in whole or in part without prior written permission from WNC.

| Index | Symbol Name | GPIO | Power Domain | Voltage | MT2731 Pin-out | Description |
|---|---|---|---|---|---|---|
| GO1 | B:GPIO24 | EINT24 | DVDD18_IOLM | 1.8V | N26 | O:I2S0_MCK |
| GO2 | B:GPIO13 | EINT13 | DVDD28_IOTCU | 3.3V | AA24 | GPIO13_3V3/O:I2S4_LRCK/I0:SPI2_A_MI |
| GO3 | B:GPIO1 | EINT1 | DVDD18_IOLM | 1.8V | M26 | GPIO1_1V8 |
| GO4 | B:GPIO15 | EINT15 | DVDD28_IOTCU | 3.3V | AB24 | GPIO15_3V3/O:I2S4_BCK/O:SPI2_A_MO/I1:URXD5 |
| GO5 | B:GPIO43 | EINT43 | DVDD28_IOAUD | 3.3V | Y24 | GPIO43_3V3/O:I2S4_MCK/O:SPI2_A_CS2A |
| GO6 | B:GPIO28 | EINT28 | DVDD18_IOLM | 1.8V | P25 | GPIO28_1V8 |
| GO7 | B:GPIO49 | EINT49 | DVDD28_IOTCU | 3.3V | AA22 | O:URTS2/O:SPI0_A_CLK |
| GO8 | B:GPIO47 | EINT47 | DVDD28_IOTCU | 3.3V | AA23 | I1:UCTS2/O:SPI0_A_CS0A |
| GO9 | B:GPIO14 | EINT14 | DVDD28_IOTCU | 3.3V | AB25 | GPIO14_3V3/I0:I2S4_DI/O:SPI2_A_CLK/O:UTXD5 |
| GO10 | B:GPIO40 | EINT40 | DVDD28_IOAUD | 3.3V | Y25 | O:PCM1_DO0/B1:SCL2/I1:URXD5 |
| GO11 | B:GPIO37 | EINT37 | DVDD28_IOAUD | 3.3V | Y23 | B0:PCM1_CLK/B1:SDA1/O:UTXD4/O:SPI2_A_CS2B |
| GO12 | B:GPIO38 | EINT38 | DVDD28_IOAUD | 3.3V | W23 | B0:PCM1_SYNC/B1:SCL1/I1:URXD4/O:SPI2_A_CS2C |
| GO13 | B:GPIO48 | EINT48 | DVDD28_IOTCU | 3.3V | AC23 | I1:URXD2/I0:SPI0_A_MI |
| GO14 | B:GPIO50 | EINT50 | DVDD28_IOTCU | 3.3V | AB22 | O:UTXD2/O:SPI0_A_MO |
| GO15 | B:GPIO7 | EINT7 | DVDD28_IOTCU | 3.3V | AC25 | O:SPI1_A_CLK/B1:SCL4 |
| GO16 | B:GPIO22 | EINT22 | DVDD18_IOLM | 1.8V | N25 | I0:I2S0_DI/I0:PCM1_DI |
| GO17 | B:GPIO31 | EINT31 | DVDD18_IOLB | 1.8V | R25 | B1:MSDC2_CLK/O:URTS3 |
| GO18 | B:GPIO36 | EINT36 | DVDD18_IOLB | 1.8V | U24 | B1:MSDC2_DAT0/O:I2S0_DO |
| GO19 | B:GPIO33 | EINT33 | DVDD18_IOLB | 1.8V | V26 | B1:MSDC2_DAT3/B0:I2S0_BCK |

CONFIDENTIAL

本資料為啟碁科技股份有限公司專有之財產，非經書面許可，不准透露或使用本資料，亦不准複印，複製或轉變成其他形式使用。
The information contained herein is the exclusive property of WNC and shall not be distributed, reproduced, or disclosed in whole or in part without prior written permission from WNC.

| | | | | | | |
|---|---|---|---|---|---|---|
| GO20 | B:GPIO30 | EINT30 | DVDD18_IOLM | 1.8V | R24 | I0:MSDC2_DSL/I1:UCTS3 |
| GO21 | B:GPIO41 | EINT41 | DVDD28_IOAUD | 3.3V | Y22 | B1:SDA0 |
| GO22 | B:GPIO39 | EINT39 | DVDD28_IOAUD | 3.3V | Y26 | I0:PCM1_DI/B1:SDA2/O:UTXD5 |
| GO23 | B:GPIO0 | EINT0 | DVDD18_IOLM | 1.8V | M25 | GPIO0_1V8 |
| GO24 | B:GPIO32 | EINT32 | DVDD18_IOLB | 1.8V | T24 | B1:MSDC2_CMD/O:I2S0_MCK |
| GO25 | B:GPIO34 | EINT34 | DVDD18_IOLB | 1.8V | V25 | B1:MSDC2_DAT2/B0:I2S0_LRCK |
| GO26 | B:GPIO62 | EINT62 | DVDD18_IOBL | 1.8V | AC19 | B1:MSDC1_DAT1 |
| GO27 | B:GPIO60 | EINT60 | DVDD18_IOBL | 1.8V | AF20 | B1:MSDC1_DAT3 |
| GO28 | B:GPIO42 | EINT42 | DVDD28_IOAUD | 3.3V | W21 | B1:SCL0 |
| GO29 | B:GPIO8 | EINT8 | DVDD18_IOBL | 1.8V | AF23 | GPIO8_1V8 |
| GO30 | B:GPIO18 | EINT18 | DVDD18_IOLM | 1.8V | M24 | GPIO18_1V8/I1:URXD1/O:UTXD3 |
| GO31 | B:GPIO19 | EINT19 | DVDD18_IOLM | 1.8V | M23 | GPIO19_1V8/O:UTXD1/I1:URXD3 |
| GO32 | B:GPIO35 | EINT35 | DVDD18_IOLB | 1.8V | U25 | B1:MSDC2_DAT1/I0:I2S0_DI |
| GO33 | B:GPIO27 | EINT27 | DVDD18_IOLM | 1.8V | T22 | I1:URXD6 |
| GO34 | B:GPIO26 | EINT26 | DVDD18_IOLM | 1.8V | T21 | O:UTXD6 |
| GO35 | B:GPIO59 | EINT59 | DVDD18_IOBL | 1.8V | AD20 | B1:MSDC1_CMD |
| GO36 | B:GPIO63 | EINT63 | DVDD18_IOBL | 1.8V | AD19 | B1:MSDC1_DAT0 |
| GO37 | B:GPIO64 | EINT64 | DVDD18_IOBL | 1.8V | AE19 | B1:MSDC1_CLK |
| GO38 | B:GPIO6 | EINT6 | DVDD28_IOTCU | 3.3V | AC26 | O:SPI1_A_CS1A/B1:SDA4 |

CONFIDENTIAL

本資料為啟碁科技股份有限公司專有之財產，非經書面許可，不准透露或使用本資料，亦不准複印，複製或轉變成其他形式使用。
The information contained herein is the exclusive property of WNC and shall not be distributed, reproduced, or disclosed in whole or in part without prior written permission from WNC.

| | | | | | | |
|---|---|---|---|---|---|---|
| GO39 | B:GPIO5 | EINT5 | DVDD28_IOTCU | 3.3V | AD25 | O:SPI1_A_MO/B1:SCL3 |
| GO40 | B:GPIO20 | EINT20 | DVDD18_IOLM | 1.8V | P23 | B0:I2S0_BCK/B0:PCM1_SYNC |
| GO41 | B:GPIO21 | EINT21 | DVDD18_IOLM | 1.8V | N24 | B0:I2S0_LRCK/B0:PCM1_CLK |
| GO42 | B:GPIO23 | EINT23 | DVDD18_IOLM | 1.8V | N23 | O:I2S0_DO/O:PCM1_DO0 |
| GO43 | B:GPIO61 | EINT61 | DVDD18_IOBL | 1.8V | AE20 | B1:MSDC1_DAT2 |
| GO44 | B:GPIO10 | EINT10 | DVDD18_IORB | 1.8V | AC4 | GPIO10_1V8 |
| GO45 | B:GPIO2 | EINT2 | DVDD18_IOLB | 1.8V | V21 | GPIO2_1V8 |
| GO46 | B:GPIO4 | EINT4 | DVDD28_IOTCU | 3.3V | AD26 | I0:SPI1_A_MI/B1:SDA3 |
| GO47 | B:GPIO90 | EINT90 | DVDD18_IOBR | 1.8V | AE4 | GPIO90_1V8/O:PWM1/O:I2S5_DO/B1:SCL1 |
| GO48 | B:GPIO12 | EINT12 | DVDD18_IORT | 1.8V | Y5 | GPIO12_1V8 |
| GO49 | B:GPIO87 | EINT87 | DVDD18_IOBR | 1.8V | AB6 | GPIO87_1V8/O:I2S5_BCK/I1:UCTS2 |
| GO50 | B:GPIO88 | EINT88 | DVDD18_IOBR | 1.8V | AB5 | GPIO88_1V8/O:I2S5_LRCK/O:URTS2 |
| GO51 | B:GPIO89 | EINT89 | DVDD18_IOBR | 1.8V | AF4 | GPIO89_1V8/O:PWM0/O:I2S5_MCK/B1:SDA1/O:UTXD2 |
| GO52 | B:GPIO93 | EINT93 | DVDD18_IORB | 1.8V | AE3 | O:UTXD1/O:SPI1_B_CS1A |
| GO53 | B:GPIO94 | EINT94 | DVDD18_IORB | 1.8V | AF2 | I1:URXD1/O:SPI1_B_CLK |
| GO54 | B:GPIO95 | EINT95 | DVDD18_IORB | 1.8V | AF3 | I1:UCTS1/I0:SPI1_B_MI |
| GO55 | B:GPIO96 | EINT96 | DVDD18_IORB | 1.8V | AE2 | O:URTS1/O:SPI1_B_MO/ |

### 3.5.2 Wake up/De-bounce

Table below shows available GPIO pins in the default software setting and internally pulled-down in the device. 1.8V GPIO pins support the interrupt to wake NAD system up, and EINT0 to 15 also supports the hardware de-bounce to filter the mechanical bounce noise.

CONFIDENTIAL

本資料為啟碁科技股份有限公司專有之財產，非經書面許可，不准透露或使用本資料，亦不准複印，複製或轉變成其他形式使用。
The information contained herein is the exclusive property of WNC and shall not be distributed, reproduced, or disclosed in whole or in part without prior written permission from WNC.

| Index | Symbol Name | GPIO | Power Domain | Voltage | MT2731 Pin-out | Description |
|---|---|---|---|---|---|---|
| GO1 | B:GPIO24 | EINT24 | DVDD18_IOLM | 1.8V | N26 | Wake up |
| GO2 | B:GPIO13 | EINT13 | DVDD28_IOTCU | 3.3V | AA24 | Wake up/ Hardware De-bounce |
| GO3 | B:GPIO1 | EINT1 | DVDD18_IOLM | 1.8V | M26 | Wake up/ Hardware De-bounce |
| GO4 | B:GPIO15 | EINT15 | DVDD28_IOTCU | 3.3V | AB24 | Wake up/ Hardware De-bounce |
| GO5 | B:GPIO43 | EINT43 | DVDD28_IOAUD | 3.3V | Y24 | Wake up |
| GO6 | B:GPIO28 | EINT28 | DVDD18_IOLM | 1.8V | P25 | Wake up |
| GO7 | B:GPIO49 | EINT49 | DVDD28_IOTCU | 3.3V | AA22 | Wake up |
| GO8 | B:GPIO47 | EINT47 | DVDD28_IOTCU | 3.3V | AA23 | Wake up |
| GO9 | B:GPIO14 | EINT14 | DVDD28_IOTCU | 3.3V | AB25 | Wake up |
| GO10 | B:GPIO40 | EINT40 | DVDD28_IOAUD | 3.3V | Y25 | Wake up |
| GO11 | B:GPIO37 | EINT37 | DVDD28_IOAUD | 3.3V | Y23 | Wake up |
| GO12 | B:GPIO38 | EINT38 | DVDD28_IOAUD | 3.3V | W23 | Wake up |
| GO13 | B:GPIO48 | EINT48 | DVDD28_IOTCU | 3.3V | AC23 | Wake up |
| GO14 | B:GPIO50 | EINT50 | DVDD28_IOTCU | 3.3V | AB22 | Wake up |
| GO15 | B:GPIO7 | EINT7 | DVDD28_IOTCU | 3.3V | AC25 | Wake up/ Hardware De-bounce |
| GO16 | B:GPIO22 | EINT22 | DVDD18_IOLM | 1.8V | N25 | Wake up |
| GO17 | B:GPIO31 | EINT31 | DVDD18_IOLB | 1.8V | R25 | Wake up |
| GO18 | B:GPIO36 | EINT36 | DVDD18_IOLB | 1.8V | U24 | Wake up |
| GO19 | B:GPIO33 | EINT33 | DVDD18_IOLB | 1.8V | V26 | Wake up |
| GO20 | B:GPIO30 | EINT30 | DVDD18_IOLM | 1.8V | R24 | Wake up |
| GO21 | B:GPIO41 | EINT41 | DVDD28_IOAUD | 3.3V | Y22 | Wake up |
| GO22 | B:GPIO39 | EINT39 | DVDD28_IOAUD | 3.3V | Y26 | Wake up |
| GO23 | B:GPIO0 | EINT0 | DVDD18_IOLM | 1.8V | M25 | Wake up/ Hardware De-bounce |
| GO24 | B:GPIO32 | EINT32 | DVDD18_IOLB | 1.8V | T24 | Wake up |
| GO25 | B:GPIO34 | EINT34 | DVDD18_IOLB | 1.8V | V25 | Wake up |
| GO26 | B:GPIO62 | EINT62 | DVDD18_IOBL | 1.8V | AC19 | Wake up |

CONFIDENTIAL

本資料為啟碁科技股份有限公司專有之財產，非經書面許可，不准透露或使用本資料，亦不准複印，複製或轉變成其他形式使用。
The information contained herein is the exclusive property of WNC and shall not be distributed, reproduced, or disclosed in whole or in part without prior written permission from WNC.

| | | | | | | |
|---|---|---|---|---|---|---|
| GO27 | B:GPIO60 | EINT60 | DVDD18_IOBL | 1.8V | AF20 | Wake up |
| GO28 | B:GPIO42 | EINT42 | DVDD28_IOAUD | 3.3V | W21 | Wake up |
| GO29 | B:GPIO8 | EINT8 | DVDD18_IOBL | 1.8V | AF23 | Wake up/ Hardware De-bounce |
| GO30 | B:GPIO18 | EINT18 | DVDD18_IOLM | 1.8V | M24 | Wake up |
| GO31 | B:GPIO19 | EINT19 | DVDD18_IOLM | 1.8V | M23 | Wake up |
| GO32 | B:GPIO35 | EINT35 | DVDD18_IOLB | 1.8V | U25 | Wake up |
| GO33 | B:GPIO27 | EINT27 | DVDD18_IOLM | 1.8V | T22 | Wake up |
| GO34 | B:GPIO26 | EINT26 | DVDD18_IOLM | 1.8V | T21 | Wake up |
| GO35 | B:GPIO59 | EINT59 | DVDD18_IOBL | 1.8V | AD20 | Wake up |
| GO36 | B:GPIO63 | EINT63 | DVDD18_IOBL | 1.8V | AD19 | Wake up |
| GO37 | B:GPIO64 | EINT64 | DVDD18_IOBL | 1.8V | AE19 | Wake up |
| GO38 | B:GPIO6 | EINT6 | DVDD28_IOTCU | 3.3V | AC26 | Wake up |
| GO39 | B:GPIO5 | EINT5 | DVDD28_IOTCU | 3.3V | AD25 | Wake up/ Hardware De-bounce |
| GO40 | B:GPIO20 | EINT20 | DVDD18_IOLM | 1.8V | P23 | Wake up |
| GO41 | B:GPIO21 | EINT21 | DVDD18_IOLM | 1.8V | N24 | Wake up |
| GO42 | B:GPIO23 | EINT23 | DVDD18_IOLM | 1.8V | N23 | Wake up |
| GO43 | B:GPIO61 | EINT61 | DVDD18_IOBL | 1.8V | AE20 | Wake up |
| GO44 | B:GPIO10 | EINT10 | DVDD18_IORB | 1.8V | AC4 | Wake up/ Hardware De-bounce |
| GO45 | B:GPIO2 | EINT2 | DVDD18_IOLB | 1.8V | V21 | Wake up/ Hardware De-bounce |
| GO46 | B:GPIO4 | EINT4 | DVDD28_IOTCU | 3.3V | AD26 | Wake up/ Hardware De-bounce |
| GO47 | B:GPIO90 | EINT90 | DVDD18_IOBR | 1.8V | AE4 | Wake up |
| GO48 | B:GPIO12 | EINT12 | DVDD18_IORT | 1.8V | Y5 | Wake up/ Hardware De-bounce |
| GO49 | B:GPIO87 | EINT87 | DVDD18_IOBR | 1.8V | AB6 | Wake up |
| GO50 | B:GPIO88 | EINT88 | DVDD18_IOBR | 1.8V | AB5 | Wake up |

CONFIDENTIAL

本資料為啟碁科技股份有限公司專有之財產，非經書面許可，不准透露或使用本資料，亦不准複印，複製或轉變成其他形式使用。
The information contained herein is the exclusive property of WNC and shall not be distributed, reproduced, or disclosed in whole or in part without prior written permission from WNC.

| | | | | | | |
|---|---|---|---|---|---|---|
| GO51 | B:GPIO89 | EINT89 | DVDD18_IOBR | 1.8V | AF4 | Wake up |
| GO52 | B:GPIO93 | EINT93 | DVDD18_IORB | 1.8V | AE3 | Wake up |
| GO53 | B:GPIO94 | EINT94 | DVDD18_IORB | 1.8V | AF2 | Wake up |
| GO54 | B:GPIO95 | EINT95 | DVDD18_IORB | 1.8V | AF3 | Wake up |
| GO55 | B:GPIO96 | EINT96 | DVDD18_IORB | 1.8V | AE2 | Wake up |

# 4 Mechanical design

## 4.1 Shielding case design

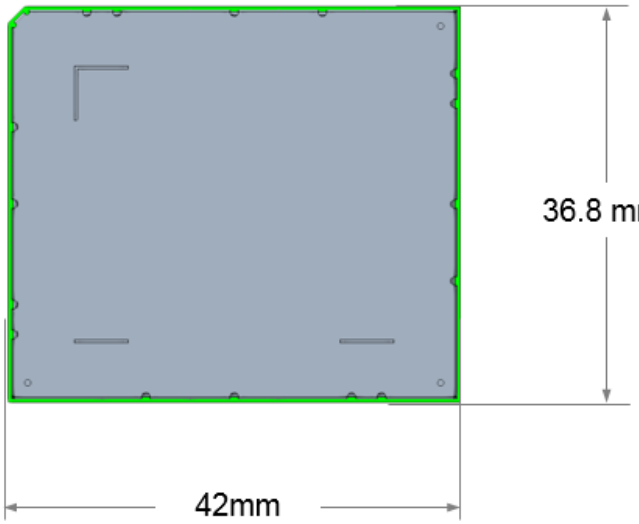


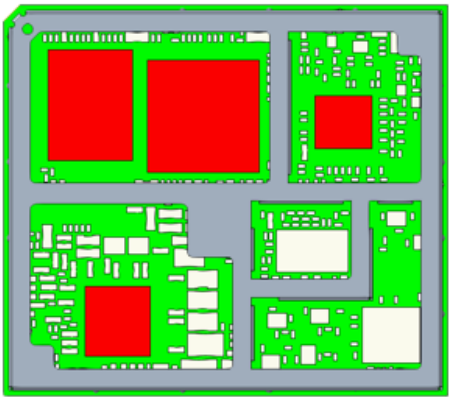

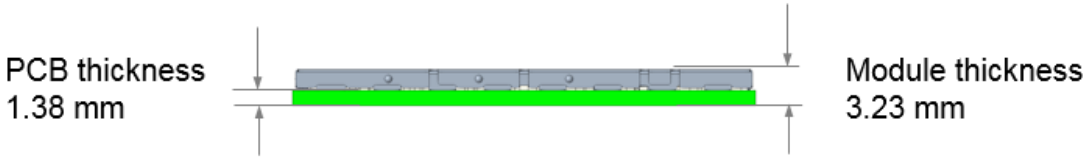


本資料為啟碁科技股份有限公司專有之財產，非經書面許可，不准透露或使用本資料，亦不准複印，複製或轉變成其他形式使用。
The information contained herein is the exclusive property of WNC and shall not be distributed, reproduced, or disclosed in whole or in part without prior written permission from WNC.

## 4.2 Label information

CONFIDENTIAL

本資料為啟碁科技股份有限公司專有之財產，非經書面許可，不准透露或使用本資料，亦不准複印，複製或轉變成其他形式使用。
The information contained herein is the exclusive property of WNC and shall not be distributed, reproduced, or disclosed in whole or in part without prior written permission from WNC.

## 4.3 NAD land pattern

1.36-MM is the original NAD bottom side copper pad diameter size. It implemented the solder mask to cover these LGA pads; thus, SMD(Solder Mask Define) round pad diameter is 1.20-MM

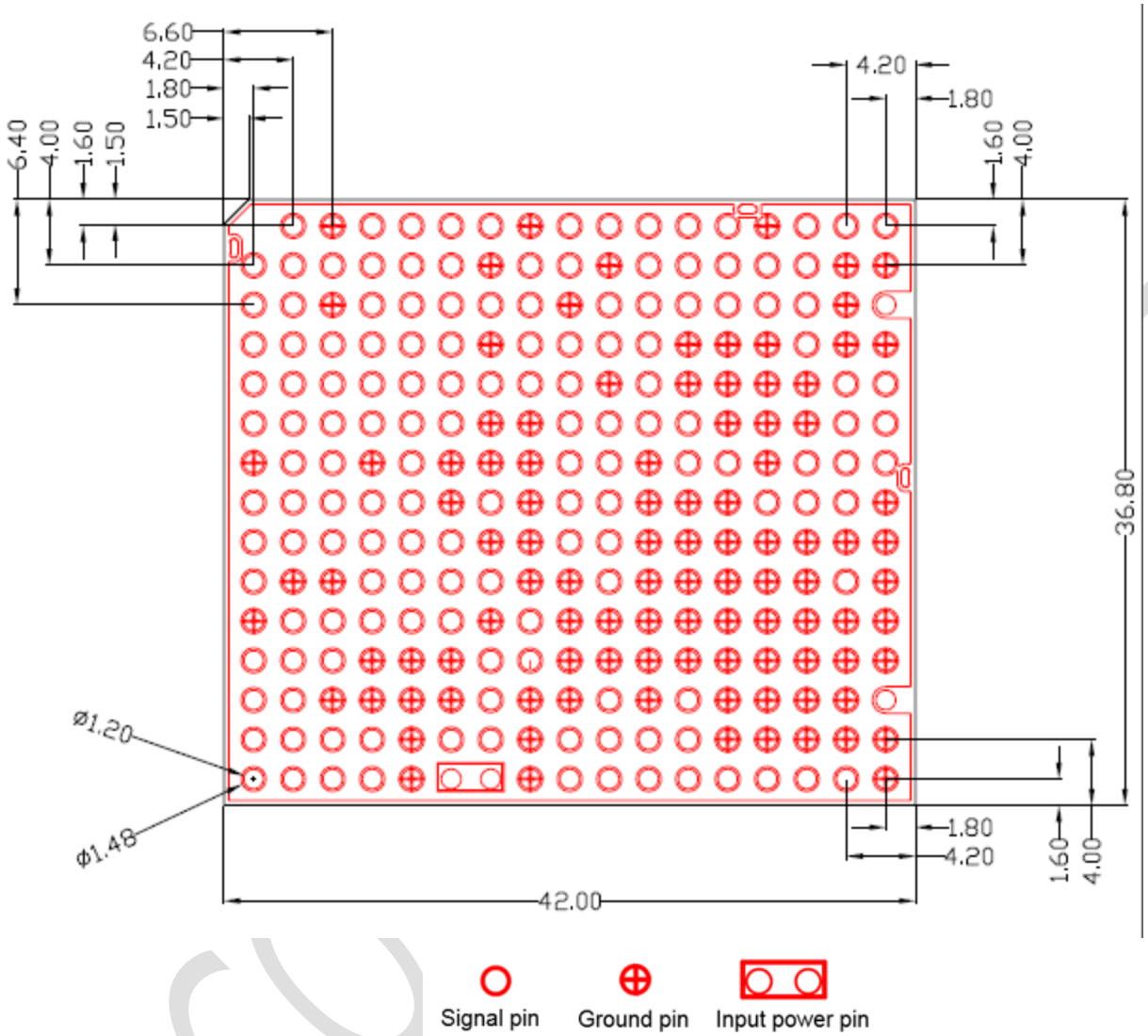


## 4.4 Stencil opening

Following chart is the recommendation for the stencil opening design
NOTE: The final design open window diagram will be updated after the reliability tests completed

本資料為啟碁科技股份有限公司專有之財產，非經書面許可，不准透露或使用本資料，亦不准複印，複製或轉變成其他形式使用。
The information contained herein is the exclusive property of WNC and shall not be distributed, reproduced, or disclosed in whole or in part without prior written permission from WNC.

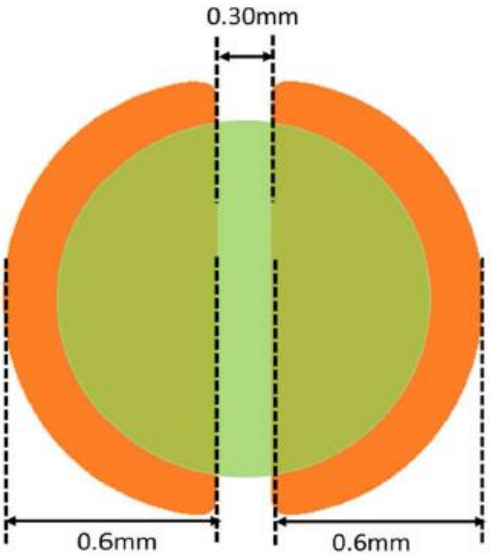


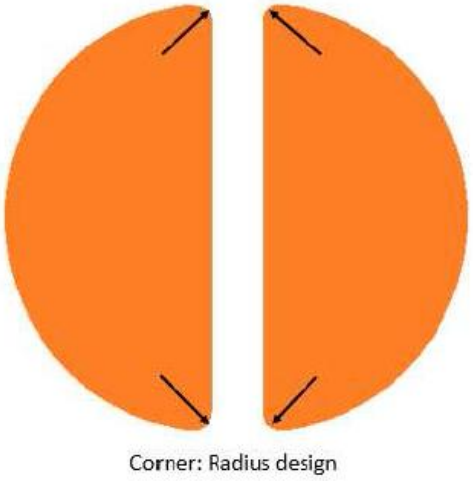


*Orange color: stencil aperture

Thickness of stencil: 0.12mm

Solder Paste Recommendation: SAC305 Alloy

## 4.5 Reflow profile

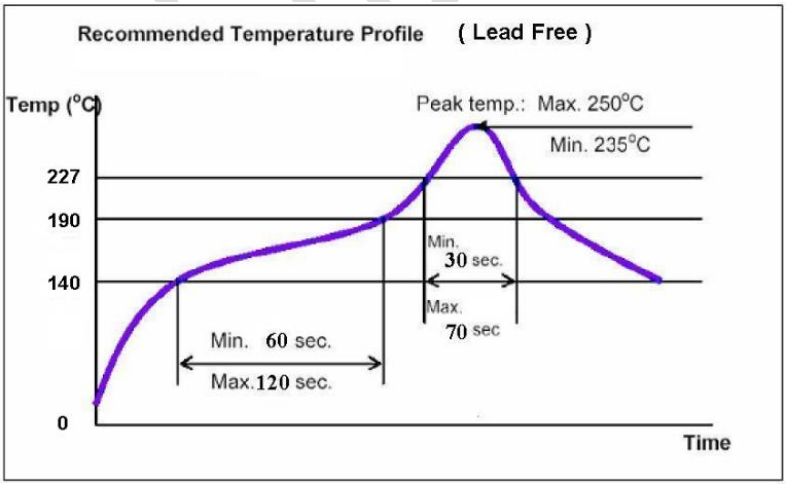


| Profile Feature | Parameters |
|---|---|
| Peak Temperature | 235 to 250°C |
| Reflow Zone(Above 227°C or 230°C) | 30 to 70 Seconds |
| Preheat Zone(140 to 190°C) | 60 to 120 Seconds |

## 4.6 Moisture sensitivity level

本資料為啟碁科技股份有限公司專有之財產，非經書面許可，不准透露或使用本資料，亦不准複印，複製或轉變成其他形式使用。
The information contained herein is the exclusive property of WNC and shall not be distributed, reproduced, or disclosed in whole or in part without prior written permission from WNC.

UMC-STD31LF complies IPC/JEDEC J-STD-020 Standard MSL 3

## 4.7 ESD

It strongly recommends Developer to place ESD suppression components on the interconnection signal traces between NAD bottom pads and the application board for preventing NAD being suffered ESD events with the voltage strength over the requirement defined in the table as below

| Specification/Requirements | Contact Discharge |
|---|---|
| Human Body Model(HBM) | 2000 Voltages |
| Charge Device Model(CDM) | 500 Voltages |

## 4.8 Packaging

Tape and reel information

A simplified sketch of UMC-STD31LF tape carrier is shown in figures below, including the proper part orientation, key dimensions, and maximum number of devices per reel

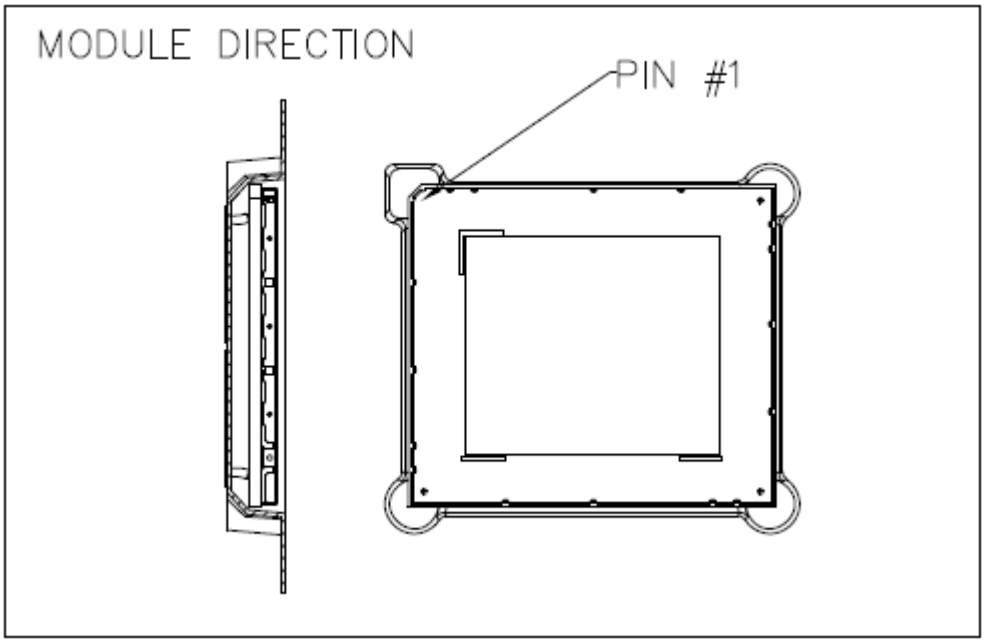


本資料為啟碁科技股份有限公司專有之財產，非經書面許可，不准透露或使用本資料，亦不准複印，複製或轉變成其他形式使用。
The information contained herein is the exclusive property of WNC and shall not be distributed, reproduced, or disclosed in whole or in part without prior written permission from WNC.

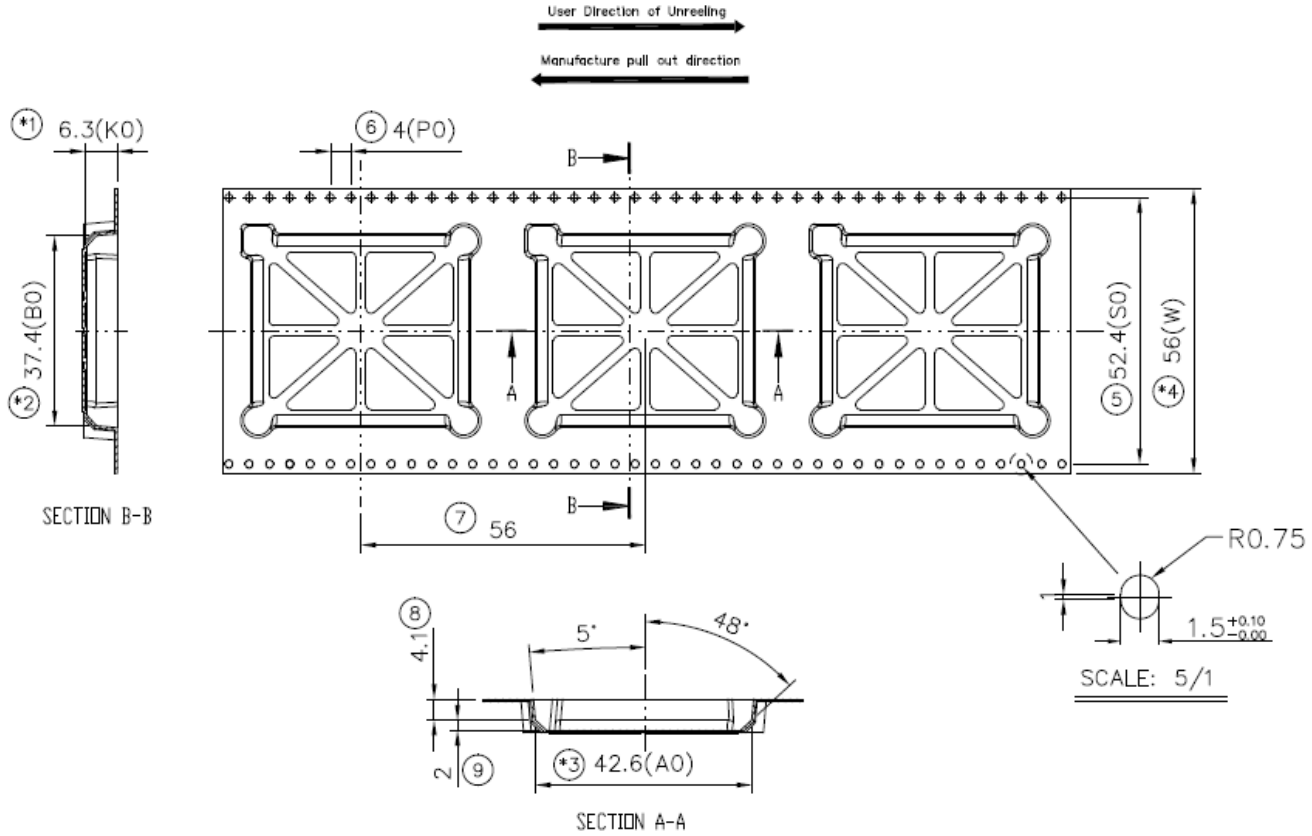
User Direction of Unreeling
Manufacture pull out direction
*1 6.3(K0)
6 4(P0)
B
*2 37.4(B0)
A
A
5 52.4(S0)
*4 56(W)
SECTION B-B
7 56
B
R0.75
1.5+0.10 -0.00
SCALE: 5/1
8 4.1
5°
48°
2
9
*3 42.6(A0)
SECTION A-A

CONFID

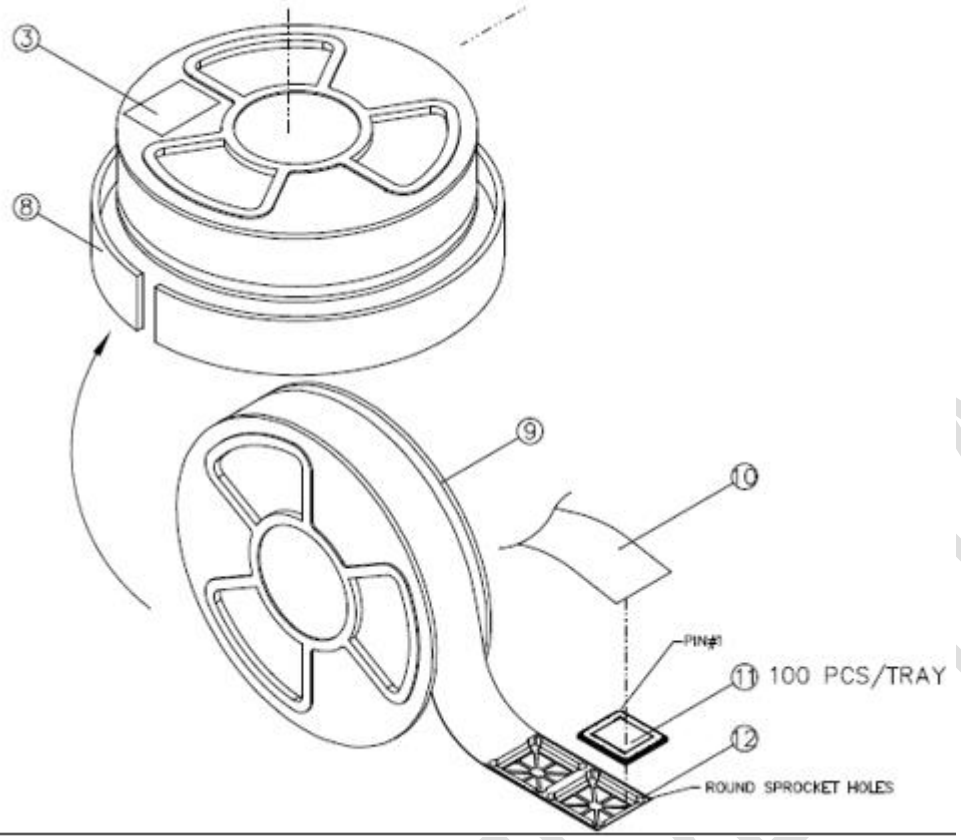


## 5 Thermal design

### 5.1 Thermal sensor

(1)There are four temperature sensors embedded in MT2731 device package. Developer could read temperature value inside MT2731 by the software command. When the package temperature reached the threshold point, MT2731 will trigger itself resetting for the over-heating protection

(2)MT2731 could get thermal information from two on board thermistors and monitor components' temperature near these two thermistor locations

CONFIDENTIAL

本資料為啟碁科技股份有限公司專有之財產，非經書面許可，不准透露或使用本資料，亦不准複印，複製或轉變成其他形式使用。
The information contained herein is the exclusive property of WNC and shall not be distributed, reproduced, or disclosed in whole or in part without prior written permission from WNC.

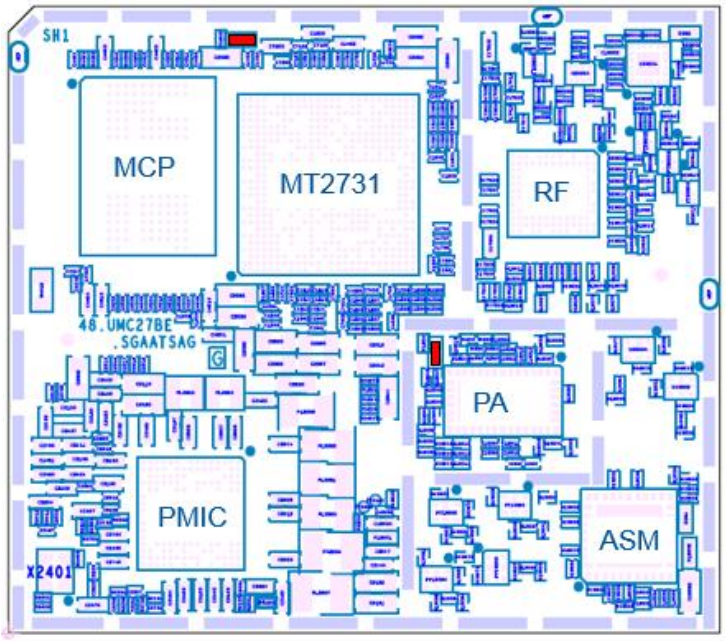


Thermistor: to detect PCB temperature

(3)Developer could connect four outgoing general purpose ADC interfaces, named as AUXADC_VIN2, AUXADC_VIN3, AUXADC_VIN4 and AUXADC_VIN5, of NAD for monitoring hotspots' temperature on the application boar

## 5.2 Software thermal mitigation

UMC-STD31LF has software approaches for the thermal mitigation. When the temperature reached the defined threshold point, LINUX kernel will control the system power by holding processors and RF power amplifier current consumption. This will make UMC-STD31LF work safely under the critical and concerned temperature condition

CONFIDENTIAL

本資料為啟碁科技股份有限公司專有之財產，非經書面許可，不准透露或使用本資料，亦不准複印，複製或轉變成其他形式使用。
The information contained herein is the exclusive property of WNC and shall not be distributed, reproduced, or disclosed in whole or in part without prior written permission from WNC.

# 6 RF specification

## 6.1 UMC-STD31LF

### 6.1.1 Maximum output power

Note(*): The minimum data in the table is following 3GPP standard

| | Specification (Band/Uplink Frequency) | Minimum | Typical | Maximum | Unit |
|---|---|---|---|---|---|
| LTE | Band1(1920 - 1980 MHz) | 20.3* | 23 | 24.5 | dBm |
| | Band2(1850 - 1910 MHz) | 20.3* | 23 | 24.5 | dBm |
| | Band3(1710 - 1785 MHz) | 20.3* | 23 | 24.5 | dBm |
| | Band4(1710 - 1755 MHz) | 20.3* | 23 | 24.5 | dBm |
| | Band5(824 - 849 MHz) | 20.3* | 23 | 24.5 | dBm |
| | Band7(2500 - 2570 MHz) | 20.3* | 23 | 24.4 | dBm |
| | Band8(880 - 915 MHz) | 20.3* | 23 | 24.5 | dBm |
| | Band12(699 - 716 MHz) | 20.3* | 23 | 24.5 | dBm |
| | Band17(704 - 716 MHz) | 20.3* | 23 | 24.5 | dBm |
| | Band20(832 – 862 MHz) | 20.3* | 23 | 24.5 | dBm |
| | Band25(1850 - 1915 MHz) | 20.3* | 23 | 24.5 | dBm |
| | Band26(814 - 849 MHz) | 20.3* | 23 | 24.5 | dBm |
| | Band28(703 - 748 MHz) | 20.3* | 23 | 24.5 | dBm |
| | Band66(1710 - 1780 MHz) | 20.3* | 23 | 24.5 | dBm |
| | Band71(663 - 698MHz) | 20.3* | 23 | 24.5 | dBm |
| WCDMA | Band1(1920 - 1980 MHz) | 21.3* | 24 | 25.5 | dBm |
| | Band2(1850 - 1910 MHz) | 21.3* | 24 | 25.5 | dBm |
| | Band3(1710 - 1785 MHz) | 21.3* | 24 | 25.5 | dBm |
| | Band5(824 - 849 MHz) | 21.3* | 24 | 25.5 | dBm |
| | Band8(880 - 915 MHz) | 21.3* | 24 | 25.5 | dBm |
| GSM (GMSK) | 850(824 - 849 MHz) | 31 | 33 | 35 | dBm |
| | 900(880 - 915 MHz) | 31 | 33 | 35 | dBm |
| | 1800(1710 - 1785 MHz) | 28 | 30 | 32 | dBm |
| | 1900(1850 - 1910 MHz) | 28 | 30 | 32 | dBm |
| GSM (8-PSK) | 850(824 - 849 MHz) | 25 | 27 | 29 | dBm |
| | 900(880 - 915 MHz) | 25 | 27 | 29 | dBm |
| | 1800(1710 - 1785 MHz) | 24 | 26 | 28 | dBm |
| | 1900(1850 - 1910 MHz) | 24 | 26 | 28 | dBm |

### 6.1.2 Sensitivity limit

本資料為啟碁科技股份有限公司專有之財產，非經書面許可，不准透露或使用本資料，亦不准複印，複製或轉變成其他形式使用。
The information contained herein is the exclusive property of WNC and shall not be distributed, reproduced, or disclosed in whole or in part without prior written permission from WNC.

| | Specification (Band/Downlink Frequency) | Minimum | Typical | Unit |
|---|---|---|---|---|
| LTE | Band1(2110 - 2170 MHz) | -96.3 | -97.8 | dBm |
| 10-MHz BW | Band2(1930 - 1990 MHz) | -94.3 | -95.8 | dBm |
| QPSK | Band3(1805 - 1880 MHz) | -93.3 | -94.8 | dBm |
| | Band4(2110 - 2155 MHz) | -96.3 | -97.8 | dBm |
| | Band5(869 - 894 MHz) | -94.3 | -95.8 | dBm |
| | Band7(2620 - 2690 MHz) | -94.3 | -95.8 | dBm |
| | Band8(925 - 960 MHz) | -93.3 | -94.8 | dBm |
| | Band12(729 - 746 MHz) | -93.3 | -94.8 | dBm |
| | Band17(734 - 746 MHz) | -93.3 | -94.8 | dBm |
| | Band20(791 – 821 MHz) | -93.3 | -94.8 | dBm |
| | Band25(1930 - 1995 MHz) | -92.8 | -94.3 | dBm |
| | Band26(859 - 894 MHz) | -93.8 | -95.3 | dBm |
| | Band28(758 - 803 MHz) | -94.8 | -96.3 | dBm |
| | Band66(2110 - 2200 MHz) | -95.8 | -97.3 | dBm |
| | Band71(617 - 652 MHz) | -94.2 | -95.7 | dBm |
| WCDMA | Band1(2110 - 2170 MHz) | -106.7 | -108 | dBm |
| | Band2(1930 - 1990 MHz) | -104.7 | -106 | dBm |
| | Band3(1805 - 1880 MHz) | -103.7 | -105 | dBm |
| | Band5(869 - 894 MHz) | -104.7 | -106 | dBm |
| | Band8(925 - 960 MHz) | -103.7 | -105 | dBm |
| GSM | 850(869 - 894 MHz) | -102 | -104 | dBm |
| | 900(925 - 960 MHz) | -102 | -104 | dBm |
| | 1800(1805 - 1880 MHz) | -102 | -104 | dBm |
| | 1900(1930 - 1990 MHz) | -102 | -104 | dBm |

## 7 Evaluation Kit

WNC provides EVK built with UMC-STD31LF EU PoC. User could use this EVK to verify basic functions or develop applications on MT2731 platform. Following is EVK block diagram

CONFIDENTIAL

本資料為啟碁科技股份有限公司專有之財產，非經書面許可，不准透露或使用本資料，亦不准複印，複製或轉變成其他形式使用。
The information contained herein is the exclusive property of WNC and shall not be distributed, reproduced, or disclosed in whole or in part without prior written permission from WNC.

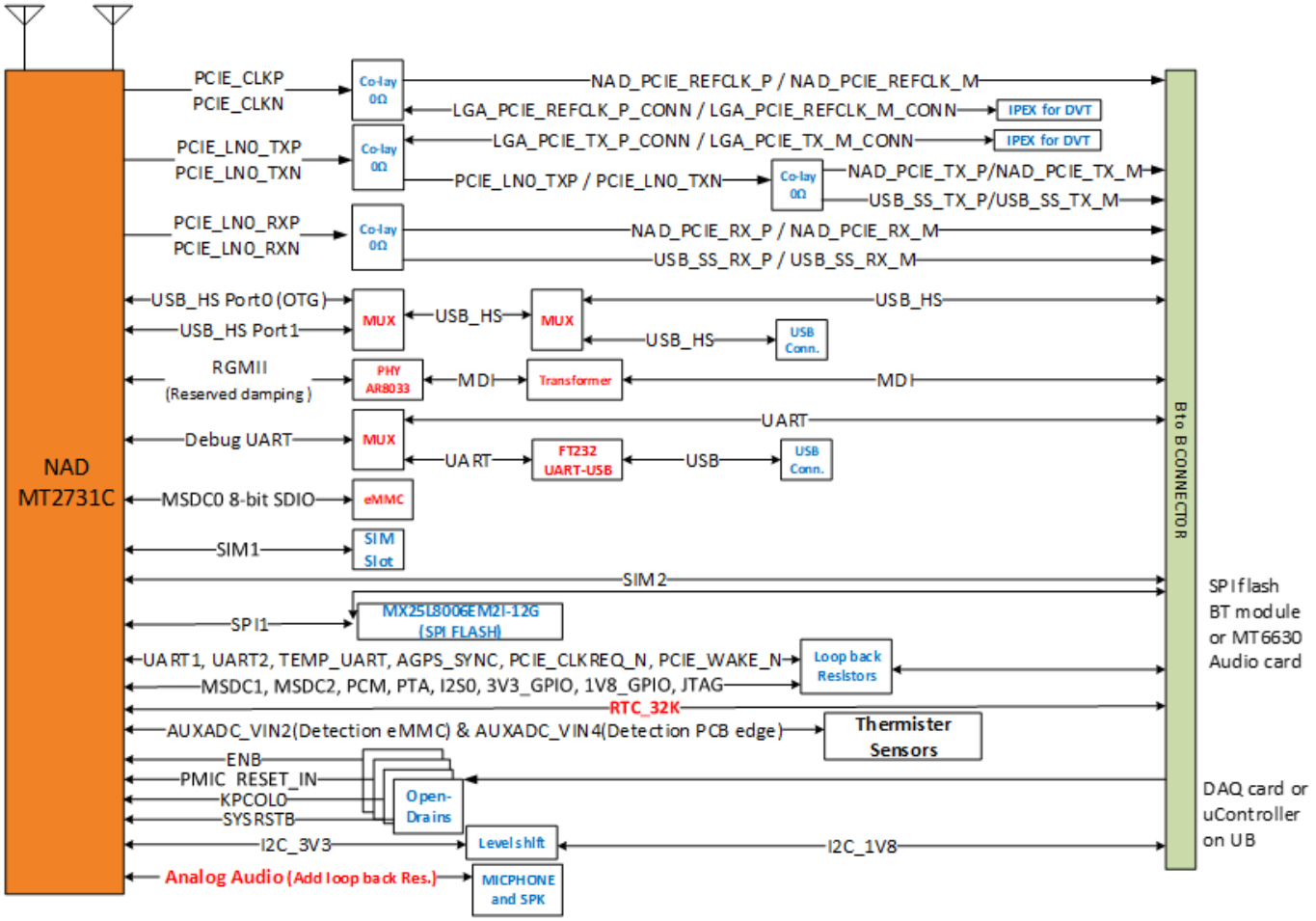


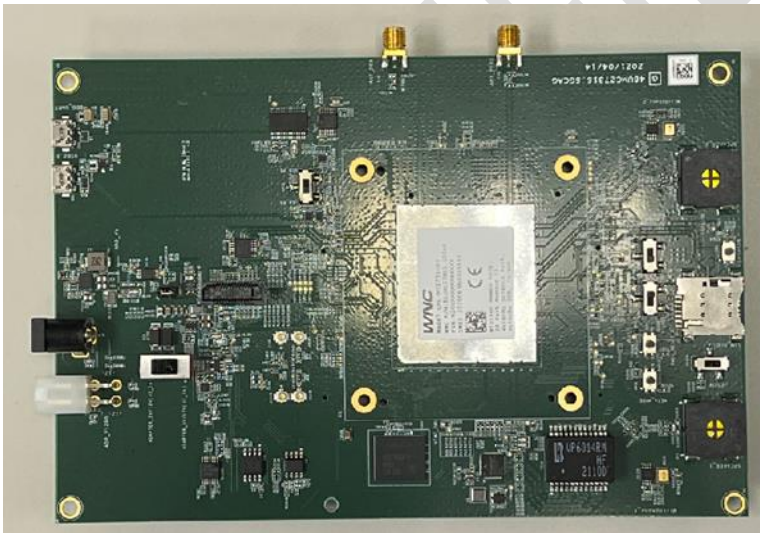

本資料為啟碁科技股份有限公司專有之財產，非經書面許可，不准透露或使用本資料，亦不准複印，複製或轉變成其他形式使用。
The information contained herein is the exclusive property of WNC and shall not be distributed, reproduced, or disclosed in whole or in part without prior written permission from WNC.

## 8 Design application notes

This section describes how to connect UMC-STD31LF NAD to the circuitry on the application board, and notes that system developers should pay attention to in their design stage

### 8.1 Power trace

On VSYS power traces from the application board to UMC-STD31LF, to place the de-coupling capacitors, 10-uF or 22-uF, near by the input of NAD as close as possible. Recommended width of VSYS trace is at least wider than 80-mil

### 8.2 Power ON/OFF and Reset

#### 8.2.1 Power ON

After supplying VSYS, to pull PMIC_ENB LOW to power NAD on

#### 8.2.2 Power OFF

When NAD is working under the operation mode, pull PMIC_ENB HIGH to power NAD off. Powering off sequence requires at least 140-ms

#### 8.2.3 Reset

(1) To pull PMIC_RESET_B LOW at least 200-ms for rebooting NAD the with completed power sequence
(2) Alternative approach is pulling SYSRSTB LOW to reset NAD without resetting the power ON/OFF sequence. This is only for the debugging

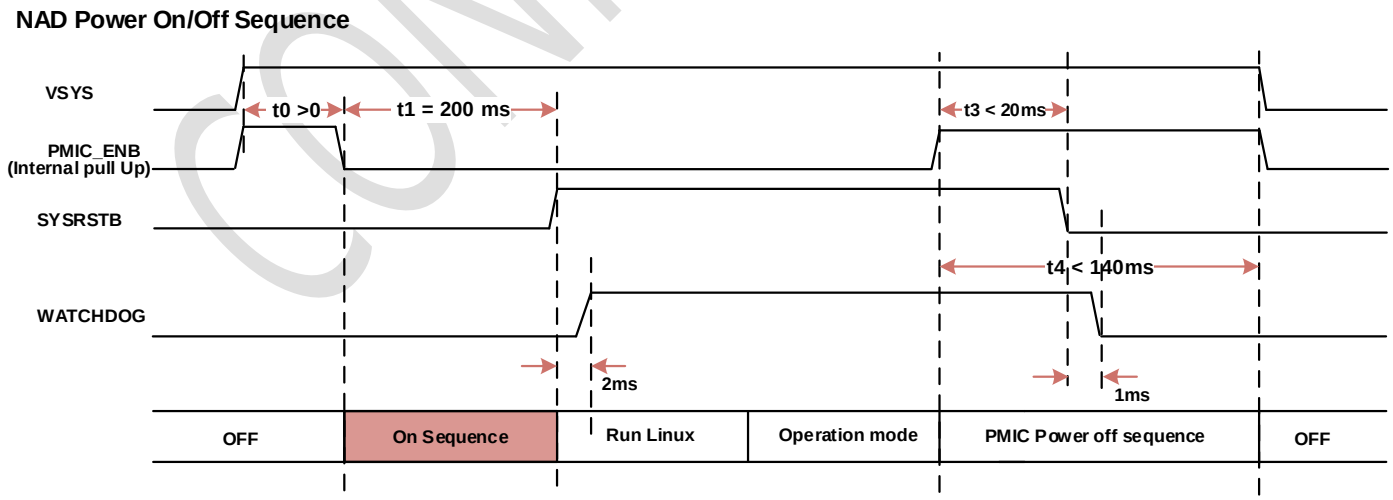


| NAD Pad# | NAD Pad Name | Pin Function Description |
|---|---|---|

CONFIDENTIAL

本資料為啟碁科技股份有限公司專有之財產，非經書面許可，不准透露或使用本資料，亦不准複印，複製或轉變成其他形式使用。
The information contained herein is the exclusive property of WNC and shall not be distributed, reproduced, or disclosed in whole or in part without prior written permission from WNC.

| | | |
|---|---|---|
| Q6/Q7 | VSYS | System supply-feed power of NAD |
| P6 | PMIC_ENB | Pull this pin low to power NAD on |
| P7 | PMIC_RESET_B | Pull this pin low to trigger the reset of PMIC |
| H7 | SYSRSTB | Pull this pin low to reset NAD without resetting the power ON/OFF sequence of PMIC |

### 8.3 USB2.0

WNC enable only 1 USB2.0 port for customer ,If customer want to use extra USB port, please contact with WNC .

### 8.4 USB2.0 OTG

The total routing length of HS-USB signal traces should be less than 7500-mil and designed with 90-OHM line impedance on the application board, and the difference length of differential pair signals shall be kept within 40-mil

| NAD Pad# | NAD Pad Name | Pin Function Description |
|---|---|---|
| B8 | USB_DM_P0 | USB 2.0 OTG differential pair signal |
| B9 | USB_DP_P0 | USB 2.0 OTG differential pair signal |
| A12 | IDDIG | ID pin of USB 2.0 OTG interface |
| L4 | VBUS | Ex-VBUS detect signal |

(support host mode & device mode)

### 8.5 I2C

I2C is internally pulled-up by 3.3V with 4.7K-OHM resistor. Push-pull is recommended for high speed mode. Open-drain is recommended for standard, fast and fast plus mode

| NAD Pad# | Pin Function Description | GPIO Name | I/O Type |
|---|---|---|---|
| E11 | SCL0 | GPIO42 | Push-pull / Open-drain |
| D10 | SDA0 | GPIO41 | Push-pull / Open-drain |

### 8.6 RGMII

Signal voltage level is required 3.3-Volatge,trace length <6000mil(Ch loading~15pf),CLK:guarding by GND,DATA:guarding by GND,trace difference <700mil,trace width/trace is 1W/1W.

Ethernet interface can be configured as MII or RMII or RGMII interface. Below list shows the different configuration for different interfaces. Default setting is RGMII interface. User can follow this list to configure pin to implement MII or RMII.

| LGA PAD No | LGA PAD name | MII | RMII | RGMII |
|---|---|---|---|---|

CONFIDENTIAL

本資料為啟碁科技股份有限公司專有之財產，非經書面許可，不准透露或使用本資料，亦不准複印，複製或轉變成其他形式使用。
The information contained herein is the exclusive property of WNC and shall not be distributed, reproduced, or disclosed in whole or in part without prior written permission from WNC.

| | | | | |
|---|---|---|---|---|
| H3 | GBE_TXC | TX_CLK(I) | CLK_REF(I) | GTXC(O) |
| H1 | GBE_TXD0 | TXD0(O) | TXD0(O) | TXD0(O) |
| J1 | GBE_TXD1 | TXD1(O) | TXD1(O) | TXD1(O) |
| H2 | GBE_TXD2 | TXD2(O) | | TXD2(O) |
| J3 | GBE_TXD3 | TXD3(O) | | TXD3(O) |
| H5 | EINT130 (GBE_TXER) | TX_ER(O) | | |
| J2 | TX_CTL (GBE_TXEN) | TX_EN(O) | TX_EN(O) | TX_CTL(O) |
| L5 | GBE_RXC | RX_CLK(I) | CLK_REF(I) | RX_CLK(I) |
| J6 | GBE_RXD0 | RXD0(I) | RXDO(I) | RXD0(I) |
| K4 | GBE_RXD1 | RXD1(I) | RXD1(I) | RXD1(I) |
| K6 | GBE_RXD2 | RXD2(I) | | RXD2(I) |
| L6 | GBE_RXD3 | RXD3(I) | | RXD3(I) |
| K7 | EINT131 (GBE_RXER) | RX_ER(I) | RX_ER(I) | |
| K5 | RX_CTL (GBE_RXDV) | RX_DV(I) | CRS_DV(I) | RX_CTL(I) |
| G5 | EINT132 (GBE_COL) | COL(I) | | |
| J5 | GBE_INTR | INTR/CRS(I) | INTR/CRS(I) | INTR/CRS(I) |
| J4 | GBE_MDC | MDC(O) | MDC(O) | MDC(O) |
| H4 | GBE_MDIO | MDIO(I/O) | MDIO(I/O) | MDIO(I/O) |

## 8.7 MSDC

### 8.7.1 Layout

The total routing length of eMMC signal traces should be less than 1000-mil and the difference length of MSDC signals shall be kept within 10-mil on the application board. Developer could use VEMC_PMU and VIO18_PMU as the power supply of eMMC device

### 8.7.2 MSDC interface

MSDC0 has the independent power domain and is dedicated for eMMC device on the application board.

| Interface | Function | Standard |
|---|---|---|
| MSDC0 | eMMC | eMMC 5.0 |

## 8.8 SIM

### 8.8.1 Layout

VSIM1_PMU/VSIM2_PMU is the power supply-feed for SIM1/SIM2 on the application board, and able to be configured as 1.8- or 3.3-Volatge level; the default setting is 1.8-Volatge. Both SIM1_SCLK and SIM2_SCLK is recommended to be shielded by the grounding

## 8.9 RF antenna port

CONFIDENTIAL

本資料為啟碁科技股份有限公司專有之財產，非經書面許可，不准透露或使用本資料，亦不准複印，複製或轉變成其他形式使用。
The information contained herein is the exclusive property of WNC and shall not be distributed, reproduced, or disclosed in whole or in part without prior written permission from WNC.

Preventing the coplanar grounding being quite close 50-OHM RF transmission lines shall be considered by Developer when you do RF trace design connected to RF antenna pads of UMC-STD31LF on the application board. It is better to have the keep-out gap which is 3 to 5 times of top layer RF trace width between these RF lines and the grounding
Meanwhile, it is also important to reserve the pi-matching circuit design close to NAD antenna out pads as possible
Avoid making RF layout trace of the primary antenna port cross the diversity antenna trace, and then this would cause the poor antenna isolation to impact RF performance of the application board

### 8.9.1 Antenna detection

Following concept schematic diagram is a design example to build the antenna detection circuit by using NAD AUXADC pin of AUXADC_VIN2 for monitoring NAD ANT_PTRX connection status with the external passive antenna shunted with a grounded inductor. In this diagram

DC block: to play the role of isolating the detection signal with Antenna matching possibly consisted of the grounded matching elements
RF block: to prevent RF signals being fed into the antenna detection circuitry
GPIO resistor: to limit the current draw when the external antenna is connected

Connected Case: NAD EINT pin would continuously send out the detection signal of the static high state; if the external antenna is well-attached with the application board, the software reading value of AUXADC_VIN2 is kept as static zero-Voltage

Disconnected Case: If any broken events happened on RF path between the external antenna and NAD ANT_PTRX, AUXADC_VIN2 would read a high state voltage level generated by NAD EINT port

CONFIDENTIAL

本資料為啟碁科技股份有限公司專有之財產，非經書面許可，不准透露或使用本資料，亦不准複印，複製或轉變成其他形式使用。
The information contained herein is the exclusive property of WNC and shall not be distributed, reproduced, or disclosed in whole or in part without prior written permission from WNC.

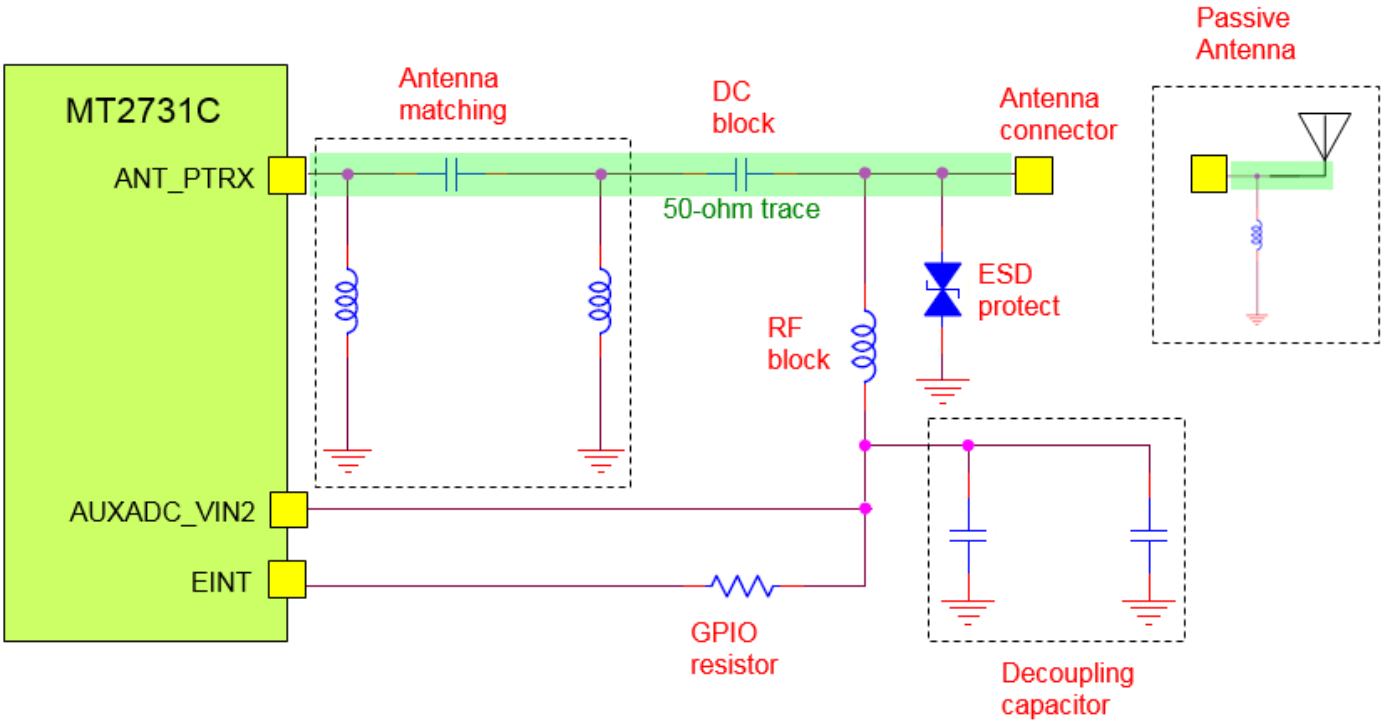


## 8.10 KPCOL0

Pull KPCOL0 LOW to force NAD being USB Download Mode for user updating NAD software

## 8.11 IDDIG

This pin is used as USB 2.0 OTG ID pin

## 8.12 WATCHDOG

WATCHDOG is a 1.8V level signal generated from MT2731 and then received by PMIC. In normal cases, MT2731 keeps WATCHDOG as the high state; in case of the low state event happened, a NAD resetting reaction steps would be performed between MT2731 and PMIC and defined as below

(1) If MT2731 is malfunctioning, WATCHDOG would become the low state, as well as WDTRSTB_IN of PMIC. Then, PMIC starts itself reset
(2) After the reset of PMIC is finished, PMIC sent RESETB of the low state to SYSRSTB of MT2731. Then, MT2731 also starts itself reset procedure

本資料為啟碁科技股份有限公司專有之財產，非經書面許可，不准透露或使用本資料，亦不准複印，複製或轉變成其他形式使用。
The information contained herein is the exclusive property of WNC and shall not be distributed, reproduced, or disclosed in whole or in part without prior written permission from WNC.

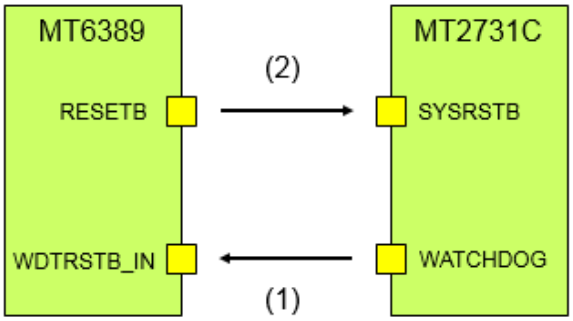


*Note:This function work automatic internally, customer don't need to do anything to control it.

### 8.13 SRCLKENA0

NAD status indicator generated from MT2731; the state of high(1.8V) for Normal Mode, as well as low(0-Voltage) for Sleep/Low Power Mode

### 8.14 RTC_CLK

32.768-KHz clock signal generated from PMIC is able to be the synchronized signal source for other functional blocks on the application board

### 8.15 Thermal

It is recommended to reserve contact ground area as broad as possible on TCU. By widening contact ground area, the heat generated by module will be dissipated more efficiently. Green rectangular area is reference area for ground contact

CONFIDENTIAL

本資料為啟碁科技股份有限公司專有之財產，非經書面許可，不准透露或使用本資料，亦不准複印，複製或轉變成其他形式使用。
The information contained herein is the exclusive property of WNC and shall not be distributed, reproduced, or disclosed in whole or in part without prior written permission from WNC.

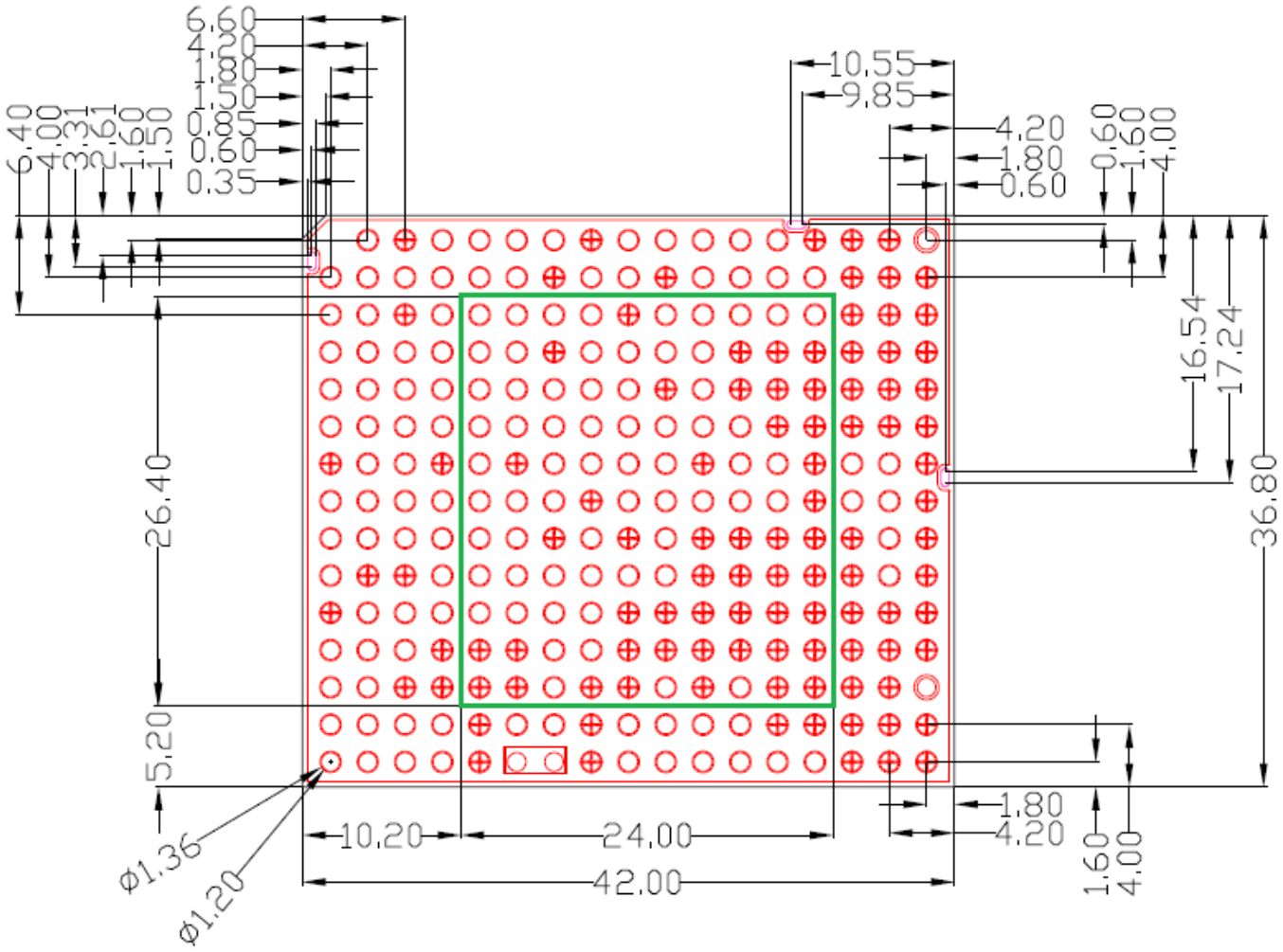


## 9 Abbreviation

| Acronym | Definition |
|---|---|
| ADC | Analog Digital Converter |
| CAT | Category |
| CHN | China |
| codec | Compress Decompress |
| CS | Circuit Switch |
| DC | Direct Current |
| DL | Down Link |
| DMIPS | Dhrystone Million Instructions executed Per Second |
| e-call | Emergency Call |

本資料為啟碁科技股份有限公司專有之財產，非經書面許可，不准透露或使用本資料，亦不准複印，複製或轉變成其他形式使用。
The information contained herein is the exclusive property of WNC and shall not be distributed, reproduced, or disclosed in whole or in part without prior written permission from WNC.

| | |
|---|---|
| EDGE | Enhanced Data Rate for GSM Evolution |
| EINT | External Interrupt Input |
| eMMC | Embedded Multi Media Card |
| ESD | Electro Static Discharge |
| EU | Europe |
| GMII | Gigabit Media Independent Interface |
| GND | Ground |
| GPIO | General Purpose Input/Output |
| GPRS | General Packet Radio Service |
| GSM | Global System for Mobile Communications |
| I/O | Input / Output |
| I2C | Inter-integrated circuit |
| I2S | Inter-IC sound |
| IMS | IP Multimedia Subsystem |
| IP | Internet Protocol |
| JTAG | Joint Test Action Group |
| LPDDR | Low Power Double Data Rate |
| LTE | Long Term Evolution |
| Mbps | Megabit per second |
| MCP | Multi-Chip Package |
| MII | Media Independent Interface |
| mil | 1/1000 inch |
| MSDC | Mass Storage Device Class |
| MT6630 | MTK chip has Bluetooth, WLAN, GNSS function |
| NA | North America |
| NAD | Networking Access Device |
| OSS | Open Source Software |
| OTG | On The Go |
| PCB | Printed Circuit Board |

CONFIDENTIAL

本資料為啟碁科技股份有限公司專有之財產，非經書面許可，不准透露或使用本資料，亦不准複印，複製或轉變成其他形式使用。
The information contained herein is the exclusive property of WNC and shall not be distributed, reproduced, or disclosed in whole or in part without prior written permission from WNC.

| | |
|---|---|
| PCIe | Peripheral Component Interconnect Express |
| PCM | Pulse Code Modulation |
| PD | Pull Down |
| PMIC | Power management integrated circuit |
| PU | Pull Up |
| RF | Radio Frequency |
| RFFE | RF Front End |
| RGMII | Reduced Gigabit Media Independent Interface |
| ROW | Rest Of World |
| RTC | Real Time Clock |
| RX | Receive |
| SDIO | Secure Digital Input/Output |
| SIM | Subscriber Identification Module |
| SKU | Stock Keeping Unit |
| SPI | Serial Peripheral interface |
| TX | Transmit |
| UART | Universal Asynchronous Receiver and Transmitter |
| UIM | User identity module |
| UL | Up Link |
| UMTS | Universal mobile telecommunications system |
| USB | Universal Serial Bus |
| WCDMA | Wideband Code Division Multiple Access |

CONFIDENTIAL

本資料為啟碁科技股份有限公司專有之財產，非經書面許可，不准透露或使用本資料，亦不准複印，複製或轉變成其他形式使用。
The information contained herein is the exclusive property of WNC and shall not be distributed, reproduced, or disclosed in whole or in part without prior written permission from WNC.

## 10. Warning statement

### Federal Communication Commission Interference Statement:

This device complies with Part 15 of the FCC Rules. Operation is subject to the following two conditions: (1) This device may not cause harmful interference, and (2) this device must accept any interference received, including interference that may cause undesired operation.

This equipment has been tested and found to comply with the limits for a Class B digital device, pursuant to Part 15 of the FCC Rules. These limits are designed to provide reasonable protection against harmful interference in a residential installation. This equipment generates, uses and can radiate radio frequency energy and, if not installed and used in accordance with the instructions, may cause harmful interference to radio communications. However, there is no guarantee that interference will not occur in a particular installation. If this equipment does cause harmful interference to radio or television reception, which can be determined by turning the equipment off and on, the user is encouraged to try to correct the interference by one of the following measures:

- Reorient or relocate the receiving antenna.
- Increase the separation between the equipment and receiver.
- Connect the equipment into an outlet on a circuit different from that to which the receiver is connected.
- Consult the dealer or an experienced radio/TV technician for help.

FCC Caution: Any changes or modifications not expressly approved by the party responsible for compliance could void the user's authority to operate this equipment.

This transmitter must not be co-located or operating in conjunction with any other antenna or transmitter.

**Radiation Exposure Statement:**

This equipment complies with FCC radiation exposure limits set forth for an uncontrolled environment. This equipment should be installed and operated with minimum distance 22cm between the radiator & your body.

CONFIDENTIAL

本資料為啟碁科技股份有限公司專有之財產，非經書面許可，不准透露或使用本資料，亦不准複印，複製或轉變成其他形式使用。
The information contained herein is the exclusive property of WNC and shall not be distributed, reproduced, or disclosed in whole or in part without prior written permission from WNC.

**This module is intended for OEM integrators only. Per FCC KDB 996369 D03 OEM Manual v01 guidance, the following conditions must be strictly followed when using this certified module:**

**KDB 996369 D03 OEM Manual v01 rule sections:**

2.2 List of applicable FCC rules

This module has been tested for compliance to FCC Part 27, 22, 24, 90

2.3 Summarize the specific operational use conditions

The module is tested for standalone mobile RF exposure use condition. Any other usage conditions such as co-location with other transmitter(s) or being used in a portable condition will need a separate reassessment through a class II permissive change application or new certification.

2.4 Limited module procedures

Not applicable.

2.5 Trace antenna designs

Refer to "Operational Description Antenna trace"
Please contact the module supplier

2.6 RF exposure considerations

This equipment complies with FCC mobile radiation exposure limits set forth for an uncontrolled environment. This equipment should be installed and operated with a minimum distance of 22cm between the radiator & your body. If the module is installed in a portable host, a separate SAR evaluation is required to confirm compliance with relevant FCC portable RF exposure rules.

2.7 Antennas

The following antennas have been certified for use with this module; antennas of the same type with equal or lower gain may also be used with this module. The antenna must be installed such that 22 cm can be maintained between the antenna and users.

| | |
|---|---|
| Antenna Type | Dipole |
| Antenna connector | SMA |

2.8 Label and compliance information

The final end product must be labeled in a visible area with the following:
"Contains FCC ID: NKRUMC-STD31LFN".
The grantee's FCC ID can be used only when all FCC compliance requirements are met.

2.9 Information on test modes and additional testing requirements

This transmitter is tested in a standalone mobile RF exposure condition and any co-located or simultaneous transmission with other transmitter(s) or portable use will require a separate class II permissive change re-evaluation or new certification.

2.10 Additional testing, Part 15 Subpart B disclaimer

This transmitter module is tested as a subsystem and its certification does not cover the FCC Part 15 Subpart B (unintentional radiator) rule requirement applicable to the final host. The final host will still need to be reassessed for compliance to this portion of rule requirements if applicable.

As long as all conditions above are met, further transmitter test will not be required. However, the OEM integrator is still responsible for testing their end-product for any additional compliance requirements required with this module installed.

CONFIDENTIAL

本資料為啟碁科技股份有限公司專有之財產，非經書面許可，不准透露或使用本資料，亦不准複印，複製或轉變成其他形式使用。
The information contained herein is the exclusive property of WNC and shall not be distributed, reproduced, or disclosed in whole or in part without prior written permission from WNC.

**IMPORTANT NOTE:**

In the event that these conditions can not be met (for example certain laptop configurations or co-location with another transmitter), then the FCC authorization is no longer considered valid and the FCC ID can not be used on the final product. In these circumstances, the OEM integrator will be responsible for re-evaluating the end product (including the transmitter) and obtaining a separate FCC authorization.

**Manual Information To the End User**

The OEM integrator has to be aware not to provide information to the end user regarding how to install or remove this RF module in the user's manual of the end product which integrates this module.
The end user manual shall include all required regulatory information/warning as show in this manual.

**OEM/Host manufacturer responsibilities**

OEM/Host manufacturers are ultimately responsible for the compliance of the Host and Module. The final product must be reassessed against all the essential requirements of the FCC rule such as FCC Part 15 Subpart B before it can be placed on the US market. This includes reassessing the transmitter module for compliance with the Radio and EMF essential requirements of the FCC rules. This module must not be incorporated into any other device or system without retesting for compliance as multi-radio and combined equipment

## Industry Canada statement:

This device complies with ISED's licence-exempt RSSs. Operation is subject to the following two conditions: (1) This device may not cause harmful interference, and (2) this device must accept any interference received, including interference that may cause undesired operation.

Le présent appareil est conforme aux CNR d' ISED applicables aux appareils radio exempts de licence. L'exploitation est autorisée aux deux conditions suivantes : (1) le dispositif ne doit pas produire de brouillage préjudiciable, et (2) ce dispositif doit accepter tout brouillage reçu, y compris un brouillage susceptible de provoquer un fonctionnement indésirable.

### Radiation Exposure Statement:

This equipment complies with ISED radiation exposure limits set forth for an uncontrolled environment. This equipment should be installed and operated with greater than 32cm between the radiator & your body.

### Déclaration d'exposition aux radiations:

Cet équipement est conforme aux limites d'exposition aux rayonnements ISED établies pour un environnement non contrôlé. Cet équipement doit être installé et utilisé à plus de 32 cm entre le radiateur et votre corps.

**This device is intended only for OEM integrators under the following conditions:**

1) The antenna must be installed and operated with greater than 32 cm between the antenna and users
2) The transmitter module may not be co-located with any other transmitter or antenna.
3) Module approval valid only when the module is installed in the tested host or compatible series of host which have similar RF exposure characteristic with equal or larger antenna separation distance.

As long as 3 conditions above are met, further transmitter test will not be required. However, the OEM integrator is still responsible for testing their end-product for any additional compliance requirements required with this module installed.

CONFIDENTIAL

本資料為啟碁科技股份有限公司專有之財產，非經書面許可，不准透露或使用本資料，亦不准複印，複製或轉變成其他形式使用。
The information contained herein is the exclusive property of WNC and shall not be distributed, reproduced, or disclosed in whole or in part without prior written permission from WNC.

Cet appareil est conçu uniquement pour les intégrateurs OEM dans les conditions suivantes:
1) L'antenne doit être installé et exploité avec plus de 32 cm entre l'antenne et les utilisateurs
2) Le module émetteur peut ne pas être coïmplanté avec un autre émetteur ou antenne.
3) Approbation du Module valable que lorsque le module est installé dans l'hôte testé ou de la série de l'hôte compatible qui ont même caractéristique de l'exposition aux RF avec la distance égale ou supérieure séparation antenne.

Tant que les 3 conditions ci-dessus sont remplies, des essais supplémentaires sur l'émetteur ne seront pas nécessaires. Toutefois, l'intégrateur OEM est toujours responsable des essais sur son produit final pour toutes exigences de conformité supplémentaires requis pour ce module installé.

**IMPORTANT NOTE:**

In the event that these conditions can not be met (for example certain laptop configurations or co-location with another transmitter), then the Canada authorization is no longer considered valid and the IC ID can not be used on the final product. In these circumstances, the OEM integrator will be responsible for re-evaluating the end product (including the transmitter) and obtaining a separate Canada authorization.

**NOTE IMPORTANTE:**

Dans le cas où ces conditions ne peuvent être satisfaites (par exemple pour certaines configurations d'ordinateur portable ou de certaines co-localisation avec un autre émetteur), l'autorisation du Canada n'est plus considéré comme valide et l'ID IC ne peut pas être utilisé sur le produit final. Dans ces circonstances, l'intégrateur OEM sera chargé de réévaluer le produit final (y compris l'émetteur) et l'obtention d'une autorisation distincte au Canada.

**End Product Labeling**

This transmitter module is authorized only for use in device where the antenna may be installed and operated with greater than 32cm between the antenna and users. The final end product must be labeled in a visible area with the following: “Contains IC: 4441A-UMCSTD31LFN”.

**Plaque signalétique du produit final**

Ce module émetteur est autorisé uniquement pour une utilisation dans un appareil où l’antenne peut être installée et utilisée à plus de 32 cm entre l’antenne et les utilisateurs. Le produit final doit être étiqueté dans un endroit visible avec l'inscription suivante: "Contient des IC: 4441A-UMCSTD31LFN ".

**Manual Information To the End User**

The OEM integrator has to be aware not to provide information to the end user regarding how to install or remove this RF module in the user’s manual of the end product which integrates this module.
The end user manual shall include all required regulatory information/warning as show in this manual.

**Manuel d'information à l'utilisateur final**

L'intégrateur OEM doit être conscient de ne pas fournir des informations à l'utilisateur final quant à la façon d'installer ou de supprimer ce module RF dans le manuel de l'utilisateur du produit final qui intègre ce module. Le manuel de l'utilisateur final doit inclure toutes les informations réglementaires requises et avertissements comme indiqué dans ce manuel

**DETACHABLE ANTENNA USAGE**

This radio transmitter [IC: 4441A-UMCSTD31LFN] has been approved by Innovation, Science and Economic

CONFIDENTIAL

本資料為啟碁科技股份有限公司專有之財產，非經書面許可，不准透露或使用本資料，亦不准複印，複製或轉變成其他形式使用。
The information contained herein is the exclusive property of WNC and shall not be distributed, reproduced, or disclosed in whole or in part without prior written permission from WNC.

Development Canada to operate with the antenna types listed below, with the maximum permissible gain indicated. Antenna types not included in this list that have a gain greater than the maximum gain indicated for any type listed are strictly prohibited for use with this device.

Le présent émetteur radio [IC: 4441A-UMCSTD31LFN] a été approuvé par Innovation, Sciences et Développement économique Canada pour fonctionner avec les types d'antenne énumérés ci-dessous et ayant un gain admissible maximal. Les types d'antenne non inclus dans cette liste, et dont le gain est supérieur au gain maximal indiqué pour tout type figurant sur la liste, sont strictement interdits pour l'exploitation de l'émetteur.

| Manufacturer | Antenna connector | Antenna Type | MaxGain (dBi) | Impedance (Ω) |
|---|---|---|---|---|
| WNC | SMA | Dipole | 2.15 | 50 |

CONFIDENTIAL

本資料為啟碁科技股份有限公司專有之財產，非經書面許可，不准透露或使用本資料，亦不准複印，複製或轉變成其他形式使用。
The information contained herein is the exclusive property of WNC and shall not be distributed, reproduced, or disclosed in whole or in part without prior written permission from WNC.