FCC ID: NL58000RF

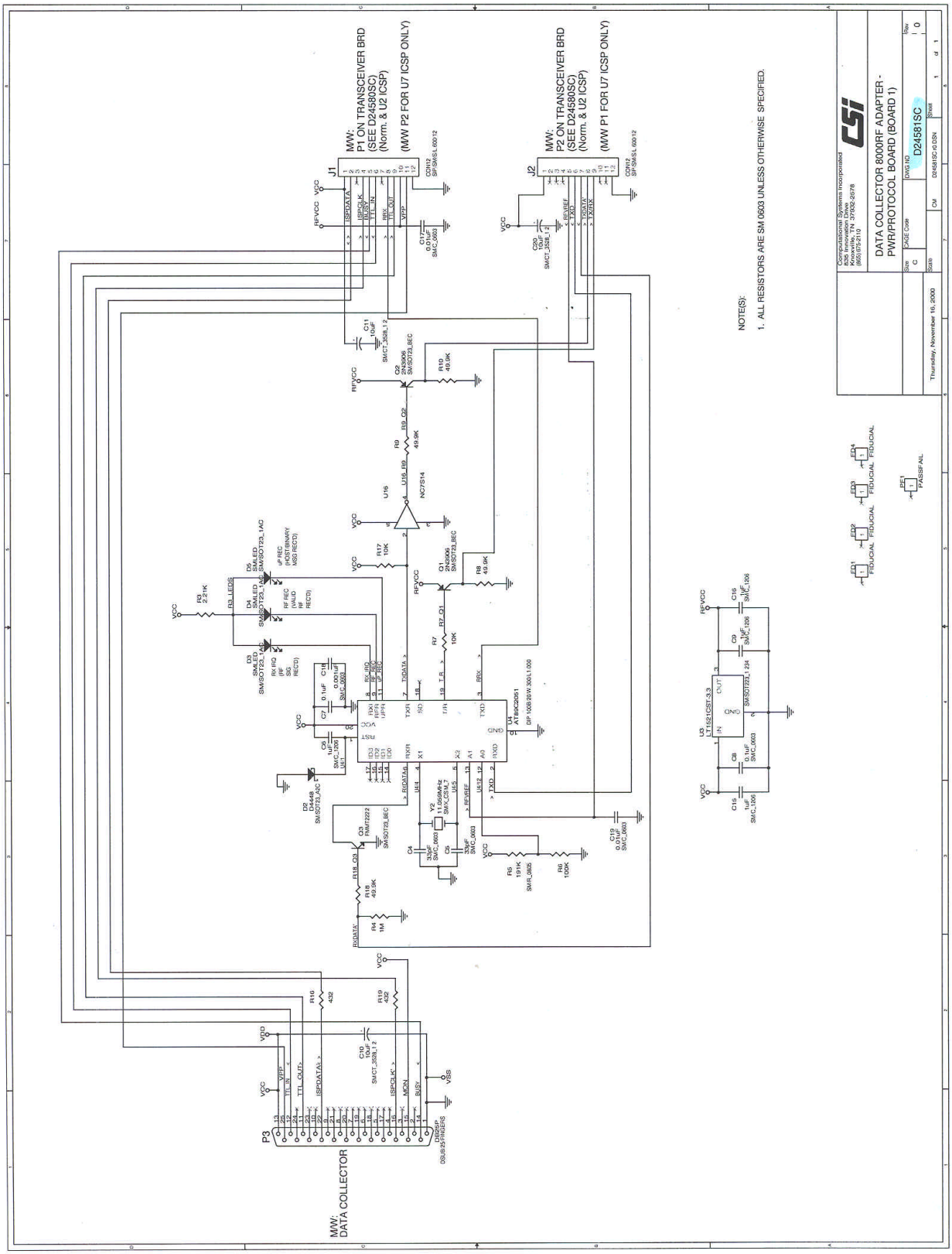

FCC ID: NL58000RF

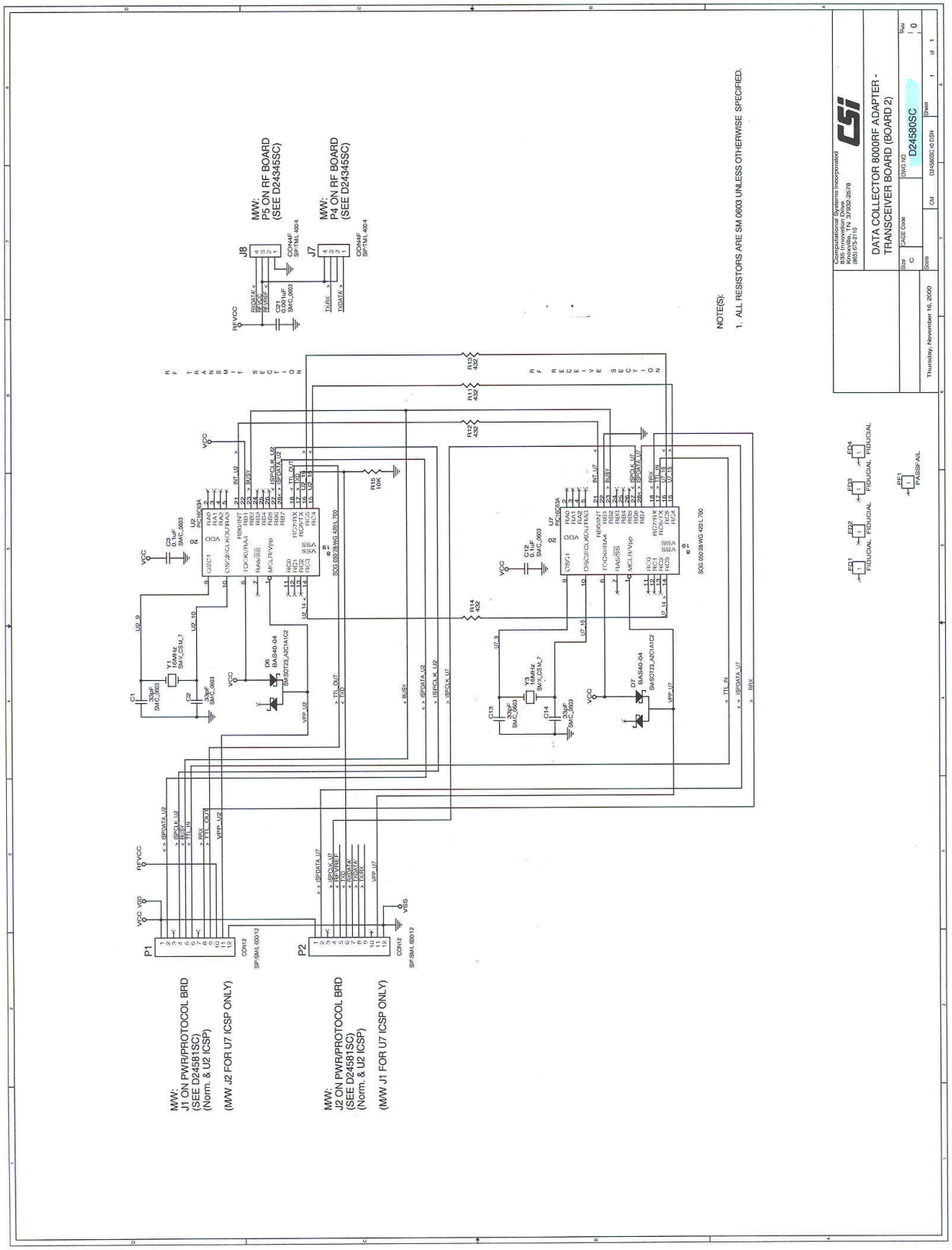

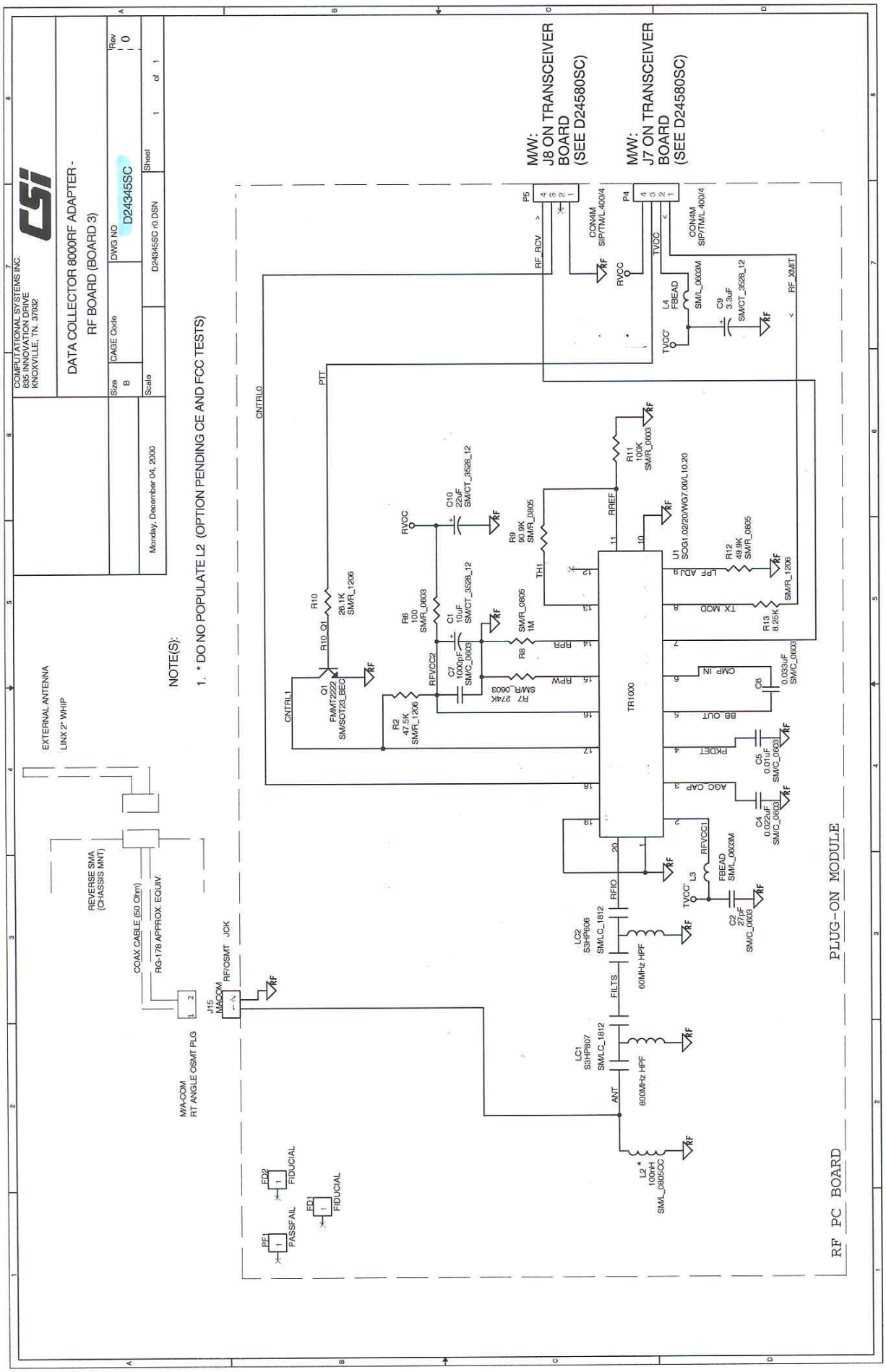
COMPUTATIONAL SYSTEMS INC.
835 INNOVATION DRIVE
KNOXVILLE, TN. 37932
DATA COLLECTOR 8000RF ADAPTER -
RF BOARD (BOARD 3)
D24345SC
Monday, December 04, 2000
NOTE(S):
1. * DO NO POPULATE L2 (OPTION PENDING CE AND FCC TESTS)
MW: J8 ON TRANSCEIVER BOARD (SEE D24580SC)
MW: J7 ON TRANSCEIVER BOARD (SEE D24580SC)
EXTERNAL ANTENNA
LINX 2" WHIP
REVERSE SMA (CHASSIS MNT)
COAX CABLE (50 Ohm)
RG-178 APPROX. EQUIV.
MA-COM RT ANGLE OSMT PLG
TR1000
PLUG-ON MODULE
RF PC BOARD