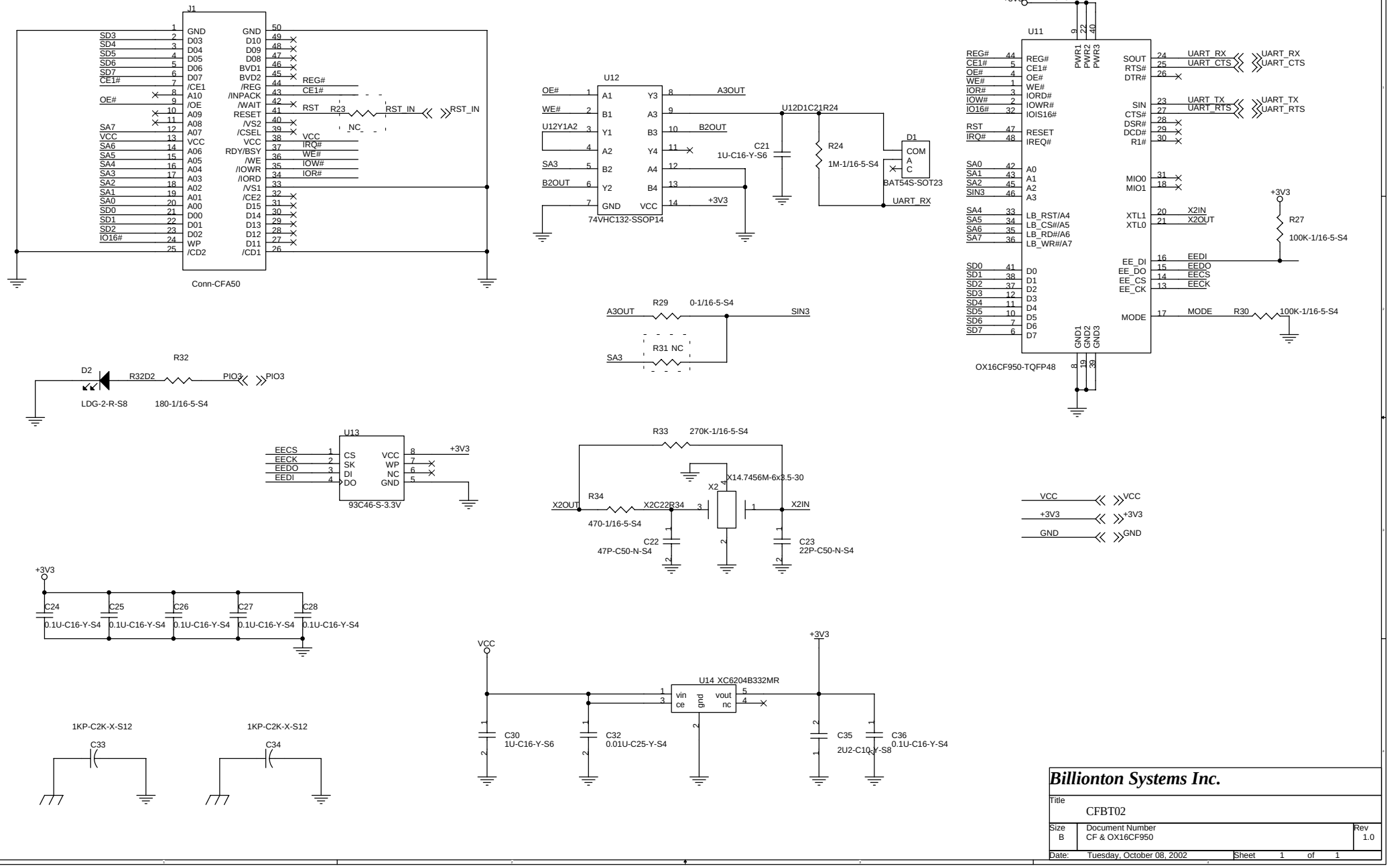


**Billionton Systems Inc.**

| | | |
|---|---|---|
| Title: CFBT02 | | |
| Size: B | Document Number: CF & OX16CF950 | Rev: 1.0 |
| Date: Tuesday, October 08, 2002 | Sheet 1 of 1 | |

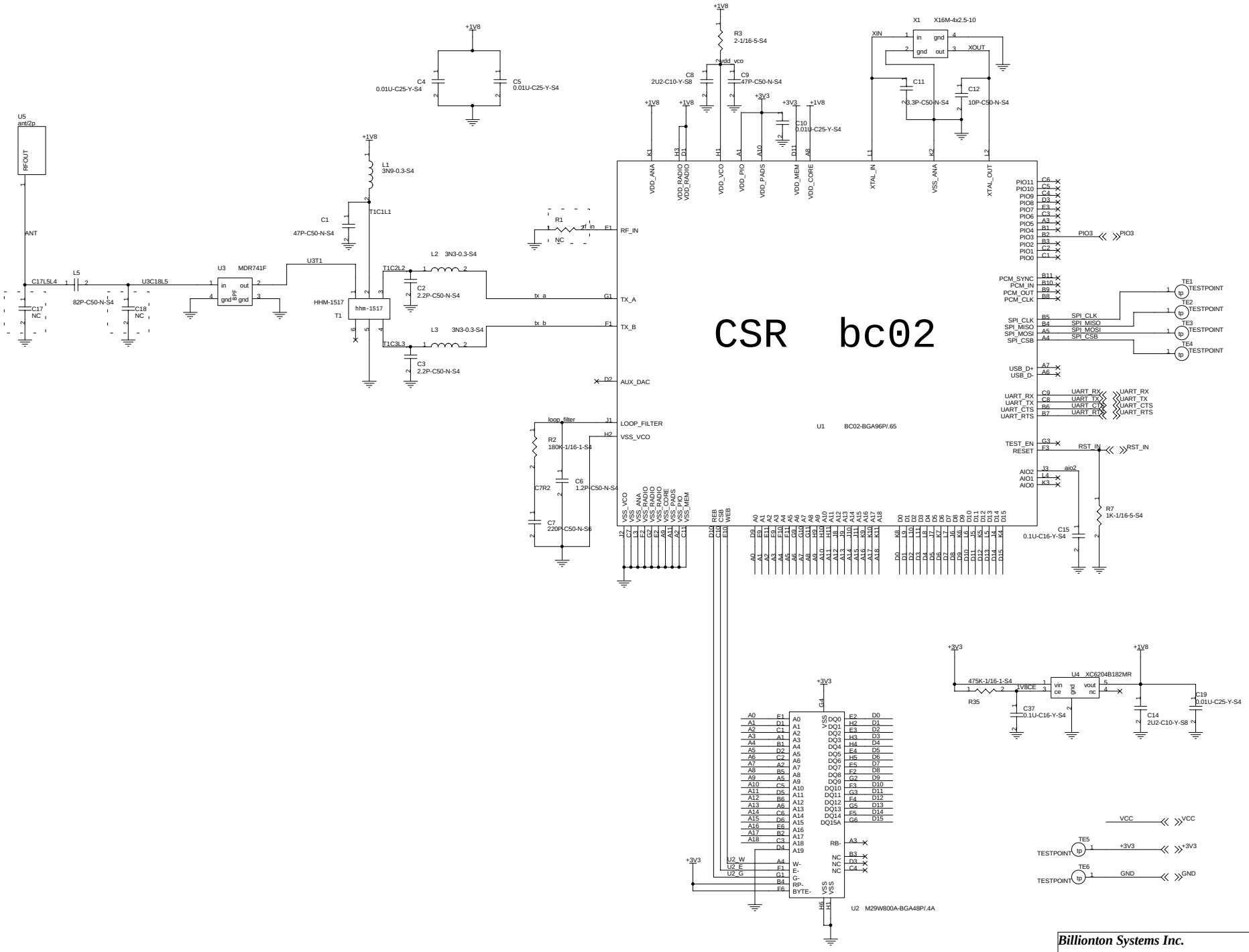


**Billionton Systems Inc.**

| | | |
|---|---|---|
| Title: CFBT02 | | |
| Size: C | Document Number: CF & OX16CF950 | Rev: 1.0 |
| Date: Tuesday, October 08, 2002 | Sheet 1 of 2 | |