SAMSUNG
WISENET

Digital Color Camera

User Manual

SNC-79440BWN

CAUTION : Changes or modifications not expressly approved by the party responsible for compliance could void the user's authority to operate the equipment.

NOTE : This equipment has been tested and found to comply with the limits for a Class A digital device, pursuant to part 15 of the FCC Rules. These limits are designed to provide reasonable protection against harmful interference when the equipment is operated in a commercial environment. This equipment generates, uses and can radiate radio frequency energy and, if not installed and used in accordance with the instruction manual, may cause harmful interference to radio communications. Operation of this equipment in a residential area is likely to cause harmful interference in which case the user will be required to correct the interference at their own expense.

User Manual

Copyright

©2017 Hanwha Techwin Co., Ltd. All rights reserved.

Trademark

Each of trademarks herein is registered. The name of this product and other trademarks mentioned in this manual are the registered trademark of their respective company.

Restriction

Copyright of this document is reserved. Under no circumstances, this document shall be reproduced, distributed or changed, partially or wholly, without formal authorization.

Disclaimer

Hanwha Techwin makes the best to verify the integrity and correctness of the contents in this document, but no formal guarantee shall be provided. Use of this document and the subsequent results shall be entirely on the user's own responsibility. Hanwha Techwin reserves the right to change the contents of this document without prior notice.

❖ **Design and specifications are subject to change without prior notice.**

PART NAMES AND FUNCTIONS

Equipped with the IR LED lights and the illumination sensor, the camera enables you to monitor at all times, day and night. The camera is suitable for both indoor and ourtdoor use.

Do not fully expose the camera to rain. The camera must be installed under a shelter to avoid exposure to excessive rain or moisture.

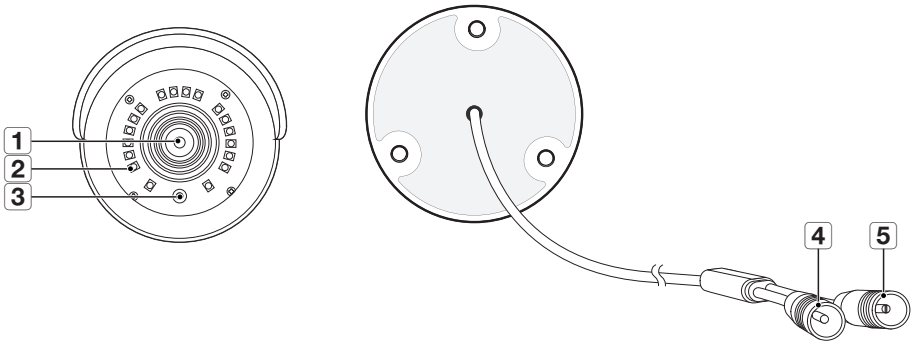

Name	Description
1 Lens	3.6mm focal length enables you to monitor at a wider field of view
2 IR LED	Infrared LED lights are controlled by the illumination sensor.
3 Illumination Sensor	Detects incoming light to control the IR LED.
4 Pairing Button	Click to do pairing manually.
5 Power Cable	Use to power the camera.

PRECAUTIONS

Ensure you read out the following instructions before installing the camera:

- Select an area (ceiling or wall) that can withstand 5 times the camera weight
- Stuck-in or peeled-off cables can cause damage to the product or a fire.
- For safety purposes, keep anyone else away from the installation site.
  And put aside personal belongings from the site, just in case.

INSTALLING THE CAMERA

The camera can be installed on the wall, ceiling, shelf or a desired position using the provided mounting bracket.

1. Choose an installation site that can sufficiently support the weight of the camera to be installed.
2. Adhere the installation template onto the ceiling and use it as installation locating tool. "Please refer to Page15 (Quick Guide)"

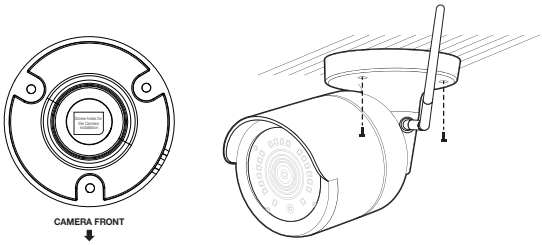

3. Attach the camera mount to the wall using the supplied screws.
4. Adjust the direction of the camera to the desired direction, and tighten the bracket.
5. Adjust camera angle as needed.

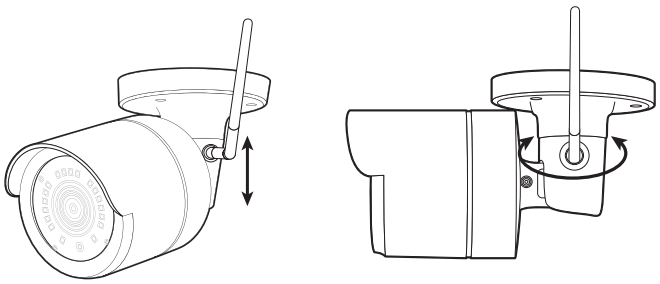

6. Connect the camera cable to the camera.
   Take caution when installing the camera outdoors because the cable connectors may be wet with moisture or pile up with impurities.
   Although the camera is IP66 rated, direct exposure to water or moisture may cause problem such as condensation.

PROTECTION OF CABLE FROM WATER

If this product is mounted outdoor, water leakage may occur at gap between cables. As shown below, butyl rubber (available on the market) shall be used to protect from water.

1. Connect power supply and BNC power source.
2. Cover black sheath of the cable (Zone A), and ensure half of butyl rubber can cover the cable joint.

- Poor water protection at the cable sheath may cause water leakage. Make sure to wrap tightly.
- The water-proof butyl rubber is made of rubber that expands to twice the original length.
- If you do not use cable joint, it must be covered with water-proof tape.

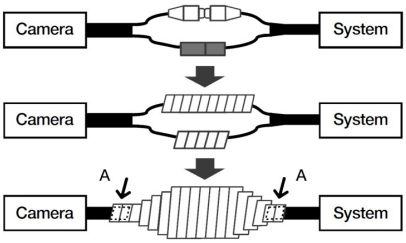

CONNECTING THE NVR

Use a 12V 0.5A power adpator to power each wireless camera. There is no need to connect cameras to NVR as it is wireless AIO.

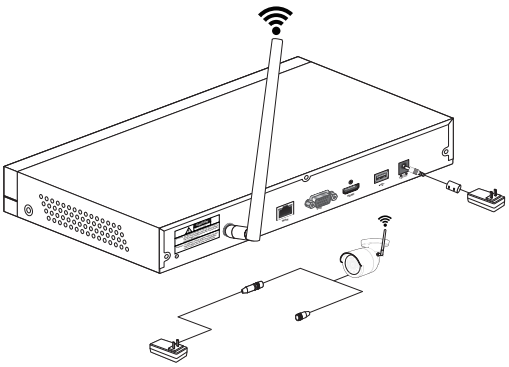

SPECIFICATIONS

CAMERA MODEL: SNC-79440BWN

Item	Details
Video	
Imaging Device	2M CMOS (1/2.9")
Effective Pixels	1,920(H)x1,080(v)
Scanning System	Progressive
Synchronization	Internal
Horizontal Resolution	1080P
Min. Illumination	0 Lux (IR LED ON)
Camera Output	RJ45
Lens	
Focal Length	3.6mm
Max. Aperture Ratio	F2.1
Angular Field of View	Diagonal : 105°
Operational	
Shutter Mode	Auto
Gain Control	Auto
White Balance	Auto
Wide Dynamic Range	D-WDR
Contrast Enhancement	Auto
Digital Noise Reduction	3DNR
Flickerless	Manual(50Hz/60Hz optional)
Day & Night	TRUE D/N, Auto
IR Distance	82ft(Total Darkness)/130ft(Ambient Lighting)
Environmental	
Operating Temperature / Humidity	-30°C ~ +50°C (-22°F ~ +122°F) / Less than 90% RH ※ Startup : -10°C ~ +50°C
Ingress Protection	IP66

Item		Details
Electrical		
Input Voltage		12V/500mA DC Adaptor
Power Consumption		5.4W(IR LEDS ON)
Mechanical / Package information		
Color / Material		White / Metal
Dimension (Ø x D)		Ø69.3 x D147.2mm (2.73" x 5.79")
Weight		0.34kg prox.
Accessory	Printed material	Quick guide
	Bracket	one body (assembled)
	Screw	3 EA (per camera)
	Anchor	3 EA (per camera)
	Hex key	1 EA (per camera)
	Power Adaptor	12V 0.5A 1 EA (per camera)
	Cable (65ft)	4EA 65ft power Cable

DIMENSION

CAMERA

Unit: mm (inch)

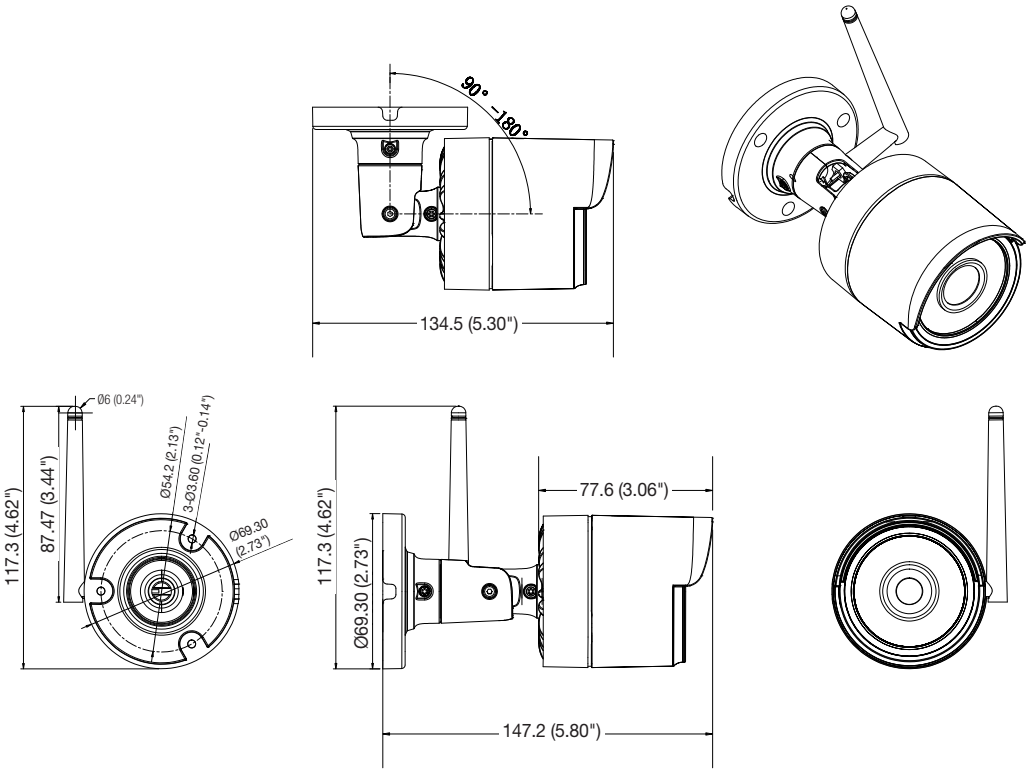

FCC Compliance Statement

This device complies with part 15 of the FCC rules. Operation is subject to the following two conditions: (1) This device may not cause harmful interference, and (2) this device must accept any interference received, including interference that may cause undesired operation.

FCC Interference Statement

This equipment has been tested and found to comply with the limits for a Class B digital device, pursuant to part 15 of the FCC Rules. These limits are designed to provide reasonable protection against harmful interference in a residential installation. This equipment generates, uses and can radiate radio frequency energy and, if not installed and used in accordance with the instructions, may cause harmful interference to radio communications. However, there is no guarantee that interference will not occur in a particular installation. If this equipment does cause harmful interference to radio or television reception, which can be determined by turning the equipment off and on, the user is encouraged to correct the interference by one of the following measures:

• Reorient or relocate the receiving antenna.

• Increase the separation between the equipment and receiver.

• Connect the equipment into an outlet on a circuit different from which the receiver is connected.
• Consult the dealer or an experienced radio/TV technician for help.

FCC Caution

Any changes or modifications not expressly approved by the party responsible for compliance could void the user's authority to operate this equipment. This transmitter must not be co-located or operating in conjunction with any other antenna or transmitter.

FCC Radiation Exposure Statement

This equipment complies with FCC radiation exposure limits set forth for an uncontrolled environment. This equipment should be installed and operated with minimum distance 20 cm between the radiator and your body. This transmitter must not be co-located or operating in conjunction with any other antenna or transmitter.

IEEE 802.11b or 802.11g operation of this product in the USA is firmware-limited to channels 1 through 11.

Industry Canada Statement

This device complies with RSS-247 of the Industry Canada Rules. Operation is subject to the following two conditions: (1) This device may not cause harmful interference, and (2) this device must accept any interference received, including interference that may cause undesired operation. Ce dispositif est conforme à la norme CNR-247 d'Industrie Canada applicable aux appareils radio exempts de licence. Son fonctionnement est sujet aux deux conditions suivantes: (1) le dispositif ne doit pas produire de brouillage préjudiciable, et (2) ce dispositif doit accepter tout brouillage reçu, y compris un brouillage susceptible de provoquer un fonctionnement indésirable.

Industry Canada Radiation Exposure Statement

This equipment complies with IC radiation exposure limits set forth for an uncontrolled environment. This equipment should be installed and operated with minimum distance 20 cm between the radiator & your body.

Déclaration d'exposition aux radiations

Cet équipement est conforme aux limites d'exposition aux rayonnements IC établies pour un environnement non con trôlé. Cet équipement doit être installé et utilisé avec un minimum de 20 cm de distance entre la source de rayonnement et votre corps.

Antennas Statement

This radio transmitter (identify the device by certification number or model number if Category II) has been approved by Industry Canada to operate with the antenna types listed below with the maximum permissible gain indicated. Antenna types not included in this list, having a gain greater than the maximum gain indicated for that type, are strictly prohibited for use with this device.

Le present emetteur radio (identifier le dispositif par son numero de certification ou son numero de modele s'il fait partie du materiel de categorie II) a ete approuve par Industrie Canada pour fonctionner avec les types d'antenne enumeres ci-dessous et ayant un gain admissible maximal. Les types d'antenne non inclus dans cette liste, et dont le gain est superieur au gain maximal indique, sont strictement interdits pour l'exploitation de l'emetteur.

Antenna List

No.	Model	Type	Gain[dBi]	Impedance
1	YH2400-SMAJ-108	Dipole antenna (Reversed SMA Jack type)	1.87	50

Hanwha Techwin cares for the environment at all product manufacturing stages, and is taking measures to provide customers with more environmentally friendly products.
The Eco mark represents Hanwha Techwin's devotion to creating environmentally friendly products, and indicates that the product satisfies the EU RoHS Directive.

Correct Disposal of This Product (Waste Electrical & Electronic Equipment)

(Applicable in the European Union and other European countries with separate collection systems)

This marking on the product, accessories or literature indicates that the product and its electronic accessories (e.g. charger, headset, USB cable) should not be disposed of with other household waste at the end of their working life. To prevent possible harm to the environment or human health from uncontrolled waste disposal, please separate these items from other types of waste and recycle them responsibly to promote the sustainable reuse of material resources.
Household users should contact either the retailer where they purchased this product, or their local government office, for details of where and how they can take these items for environmentally safe recycling.
Business users should contact their supplier and check the terms and conditions of the purchase contract. This product and its electronic accessories should not be mixed with other commercial wastes for disposal.

Correct disposal of batteries in this product

(Applicable in the European Union and other European countries with separate battery return systems.)

This marking on the battery, manual or packaging indicates that the batteries in this product should not be disposed of with other household waste at the end of their working life. Where marked, the chemical symbols Hg, Cd or Pb indicate that the battery contains mercury, cadmium or lead above the reference levels in EC Directive 2006/66. If batteries are not properly disposed of, these substances can cause harm to human health or the environment.
To protect natural resources and to promote material reuse, please separate batteries from other types of waste and recycle them through your local, free battery return system.

Head Office
6, Pangyo-ro 319 beon-gil, Bundang-gu, Seongnam-si,
Gyeonggi-do, 463-400 Rep. of KOREA
Tel : +82.70.7147.8753 Fax : +82.31.8018.3740
www.hanwha-security.com

Hanwha Techwin America
500 Frank W. Burr Blvd. Suite 43 Teaneck, NJ 07666
Toll Free +1.877.213.1222 Direct +1.201.325.6920
Fax +1.201.373.0124
www.hanwha-security.com

Hanwha Techwin Europe
Heriot House, Heriot Road, Chertsey, Surrey, KT16 9DT, United Kingdom
Tel +44.1932.57.8100 Fax +44.1932.57.8101
www.hanwha-security.eu

Hanwha
Techwin