WISENET

1080p Wireless IR Camera

User Manual

SNC-79447BW

CE

5M AHD Analog Bullet Camera
User Manual

Copyright

©2019 Hanwha Techwin Co., Ltd. All rights reserved.

Trademark

Each of trademarks herein is registered. The name of this product and other trademarks mentioned in this manual are the registered trademark of their respective company.

Restriction

Copyright of this document is reserved. Under no circumstances, this document shall be reproduced, distributed or changed, partially or wholly, without formal authorization.

Disclaimer

Hanwha Techwin makes the best to verify the integrity and correctness of the contents in this document, but no formal guarantee shall be provided. Use of this document and the subsequent results shall be entirely on the user's own responsibility. Hanwha Techwin reserves the right to change the contents of this document without prior notice.

❖ **Design and specifications are subject to change without prior notice.**

IMPORTANT SAFETY INSTRUCTIONS

1. Read these instructions.
2. Keep these instructions.
3. Heed all warnings.
4. Follow all instructions.
5. Do not use this apparatus near water.
6. Clean the contaminated area on the product surface with a soft, dry cloth or a damp cloth.
   (Do not use a detergent or cosmetic products that contain alcohol, solvents or surfactants or oil constituents as they may deform or cause damage to the product.)
7. Do not block any ventilation openings, Install in accordance with the manufacturer's instructions.
8. Do not install near any heat sources such as radiators, heat registers, stoves, or other apparatus (including amplifiers) that produce heat.
9. Do not defeat the safety purpose of the polarized or grounding-type plug. A polarized plug has two blades with one wider than the other. A grounding type plug has two blades and a third grounding prong. The wide blade or the third prong are provided for your safety. If the provided plug does not fit into your outlet, consult an electrician for replacement of the obsolete outlet.
10. Protect the power cord from being walked on or pinched particularly at plugs, convenience receptacles, and the point where they exit from the apparatus.
11. Only use attachments/ accessories specified by the manufacturer.
12. Use only with the cart, stand, tripod, bracket, or table specified by the manufacturer, or sold with the apparatus. When a cart is used, use caution when moving the cart/ apparatus combination to avoid injury from tip-over.

13. Unplug this apparatus during lighting storms or when unused for long periods of time.
14. Refer all servicing to qualified service personnel. Servicing is required when the apparatus has been damaged in any way, such as power-supply cord or plug is damaged, liquid has been spilled or objects have fallen into the apparatus, the apparatus has been exposed to rain or moisture, does not operate normally, or has been dropped.

overview

SAFETY PRECAUTIONS

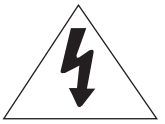

CAUTION

RISK OF ELECTRIC SHOCK.
DO NOT OPEN

CAUTION : TO REDUCE THE RISK OF ELECTRIC SHOCK, DO NOT REMOVE COVER (OR BACK) NO USER SERVICEABLE PARTS INSIDE. REFER SERVICING TO QUALIFIED SERVICE PERSONNEL.

This symbol indicates that dangerous voltage consisting a risk of electric shock is present within this unit.

This exclamation point symbol is intended to alert the user to the presence of important operating and maintenance (servicing) instructions in the literature accompanying the appliance.

WARNING

- To reduce the risk of fire or electric shock, do not expose this appliance to rain or moisture.
- To prevent injury, this apparatus must be securely attached to the floor/wall in accordance with the installation instructions.

WARNING

1. Be sure to use only the standard adapter that is specified in the specification sheet.
   Using any other adapter could cause fire, electrical shock, or damage to the product.
2. Incorrectly connecting the power supply or replacing battery may cause explosion, fire, electric shock, or damage to the product.
3. Do not connect multiple cameras to a single adapter. Exceeding the capacity may cause abnormal heat generation or fire.
4. Securely plug the power cord into the power receptacle. Insecure connection may cause fire.
5. When installing the camera, fasten it securely and firmly. The fall of camera may cause personal injury.
6. Do not place conductive objects (e.g. screwdrivers, coins, metal parts, etc.) or containers filled with water on top of the camera. Doing so may cause personal injury due to fire, electric shock, or falling objects.
7. Do not install the unit in humid, dusty, or sooty locations. Doing so may cause fire or electric shock.
8. If any unusual smells or smoke come from the unit, stop using the product. In such case, immediately disconnect the power source and contact the service center. Continued use in such a condition may cause fire or electric shock.
9. If this product fails to operate normally, contact the nearest service center. Never disassemble or modify this product in any way. (Hanwha Techwin is not liable for problems caused by unauthorized modifications or attempted repair.)
10. When cleaning, do not spray water directly onto parts of the product. Doing so may cause fire or electric shock.

CAUTION

1. Do not drop objects on the product or apply strong shock to it. Keep away from a location subject to excessive vibration or magnetic interference.
2. Do not install in a location subject to high temperature, low temperature, or high humidity. Doing so may cause fire or electric shock.
3. If you want to relocate the already installed product, be sure to turn off the power and then move or reinstall it.
4. Remove the power plug from the outlet when then there is a lightning. Neglecting to do so may cause fire or damage to the product.
5. Keep out of direct sunlight and heat radiation sources. It may cause fire.
6. Install it in a place with good ventilation.
7. Avoid aiming the camera directly towards extremely bright objects such as sun, as this may damage the CMOS image sensor.
8. Apparatus shall not be exposed to dripping or splashing and no objects filled with liquids, such as vases, shall be placed on the apparatus.
9. The Mains plug is used as a disconnect device and shall stay readily operable at any time.
10. Do not expose the camera to radioactivity. Radioactivity exposure may damage the CMOS.

Apparatus shall not be exposed to dripping or splashing and no objects filled with liquids, such as vases, shall be placed on the apparatus

CONTENTS

OVERVIEW 3

3 Important Safety Instructions
4 Safety Precautions
6 Contents
7 Part Names and Functions

INSTALLATION 8

8 Precautions
8 Installing the camera
9 Protection of Cable from Water
9 Connecting the NVR

APPENDIX 10

10 Product Specification
11 Product Overview

PART NAMES AND FUNCTIONS

Equipped with the IR LED lights and the illumination sensor, the camera enables you to monitor at all times, day and night. The camera is suitable for both indoor and ourtdoor use.

Do not fully expose the camera to rain. The camera must be installed under a shelter to avoid exposure to excessive rain or moisture.

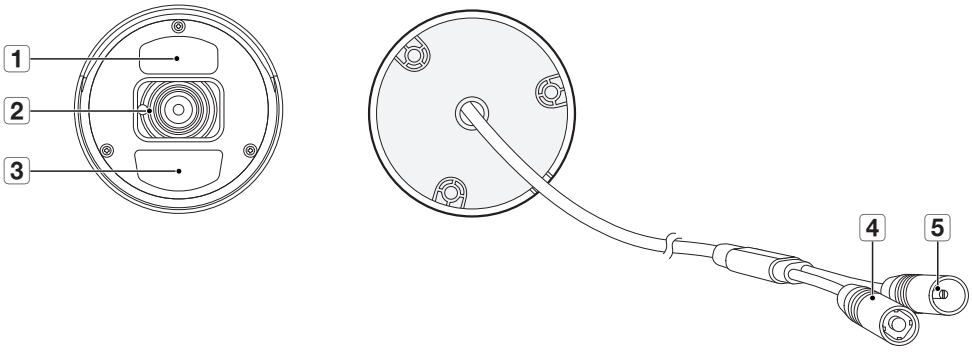

Name	Description
1 White-Light Illuminator	야간에 더욱 선명한 이미지를 얻기 위해 사용합니다.
2 Lens	4mm focal length enables you to monitor at a wider field of view
3 Illumination Sensor	Detects incoming light to control the IR LED.
4 Pairing Button	Click to do pairing manually.
5 Power Cable	Use to power the camera.

installation

PRECAUTIONS

Ensure you read out the following instructions before installing the camera:

- Select an area (ceiling or wall) that can withstand 5 times the camera weight
- Stuck-in or peeled-off cables can cause damage to the product or a fire.
- For safety purposes, keep anyone else away from the installation site.
  And put aside personal belongings from the site, just in case.

INSTALLING THE CAMERA

The camera can be installed on the wall, ceiling, shelf or a desired position using the provided mounting bracket.

1. Choose an installation site that can sufficiently support the weight of the camera to be installed.
2. Adhere the installation template onto the ceiling and use it as installation locating tool. “Please refer to Page 19 (Quick Guide)”

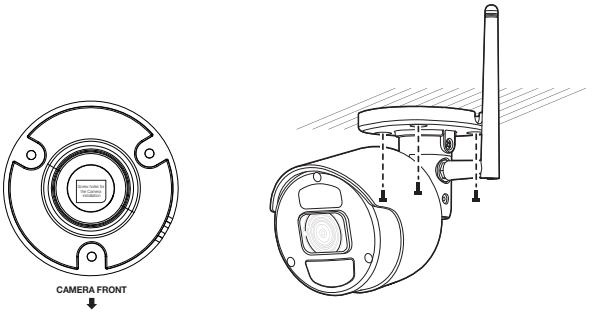

3. Attach the camera mount to the wall using the supplied screws.
4. Adjust the direction of the camera to the desired direction, and tighten the bracket.
5. Adjust camera angle as needed.

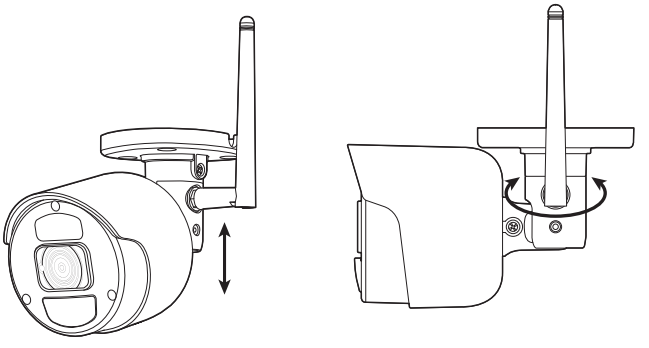

6. Connect the camera cable to the camera.
   Take caution when installing the camera outdoors because the cable connectors may be wet with moisture or pile up with impurities.
   Although the camera is IP66 rated, direct exposure to water or moisture may cause problem such as condensation.

PROTECTION OF CABLE FROM WATER

If this product is mounted outdoor, water leakage may occur at gap between cables. As shown below, butyl rubber (available on the market) shall be used to protect from water.

1. Connect power supply and BNC power source.
2. Cover black sheath of the cable (Zone A), and ensure half of butyl rubber can cover the cable joint.

- Poor water protection at the cable sheath may cause water leakage. Make sure to wrap tightly.
- The water-proof butyl rubber is made of rubber that expands to twice the original length.
- If you do not use cable joint, it must be covered with water-proof tape.

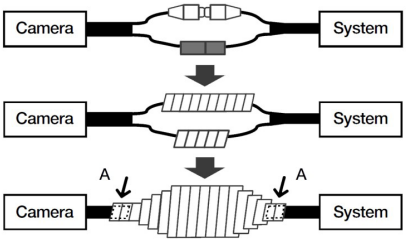

CONNECTING THE NVR

Use a 12V 0.5A power adpator to power each wireless camera. There is no need to connect cameras to NVR as it is wireless AIO.

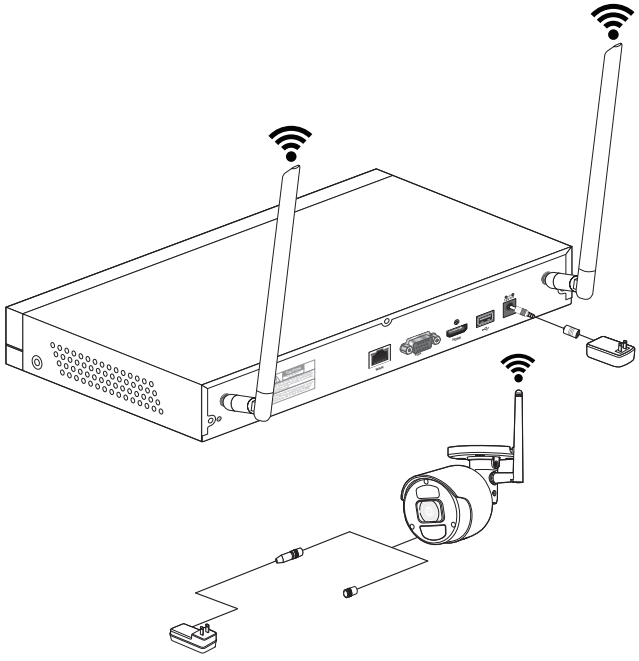

appendix

PRODUCT SPECIFICATION

Item		Details
Video		
Imaging Device		2M CMOS
Sensor		SP2309
Effective Pixels		1920x1080p (2MP)
Scanning System		Progressive
Horizontal Resolution		1080P
Min. Illumination		0 Lux (IR LED ON)
Camera Output		Wireless transmission
Lens		
Focal Length		4 mm
Max. Aperture Ratio		F2.4
Angular Field of View		D : 105°
Operational		
Shutter Mode		Auto
Gain Control		Auto
White Balance		Auto
Wide Dynamic Range		D-WDR
Digital Noise Reduction		3DNR
Day & Night		TRUE D/N, Auto
Night Distance		40ft
Transmission Distance		Max. 300 m(Empty No interference distance)
White LED Distance		7 m
PIR Distance		7 m
Environmental		
Operating Temperature / Humidity		-30°C ~ +50°C (+14°F ~ +122°F) / Less than 90% RH ※ Startup : -10°C ~ +50°C
Ingress Protection		IP66
Electrical		
Input Voltage		DC 12V 500mA
Power Consumption		5.4W(IR LEDS ON)
Mechanical / Package information		
Color / Material		White / Plastic
Mechanical design	Design	(TBD)
	Dimension (Ø x D)	Ø69.3 x D147.2mm (2.73" x 5.79")
	Weight	0.34kg

PRODUCT OVERVIEW

unit : mm(inch)

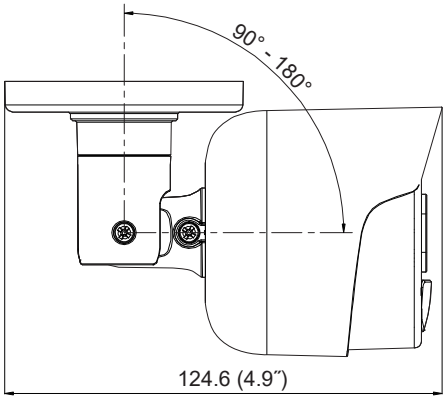

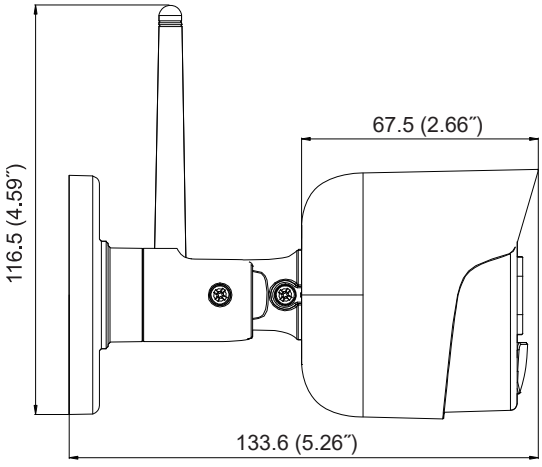

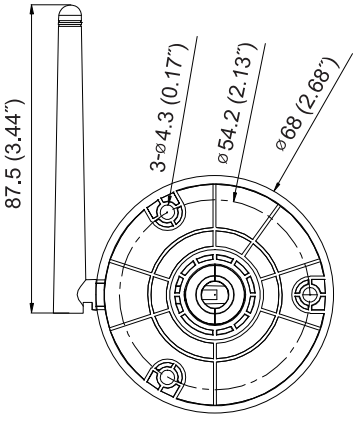

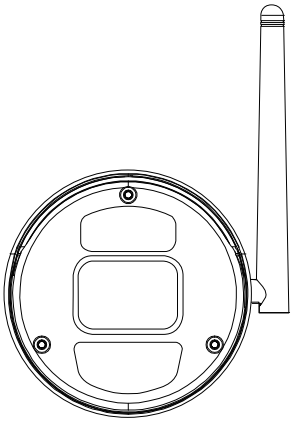

Any changes or modifications in construction of this device which are not expressly approved by the party responsible for compliance could void the user's authority to operate the equipment.

This device complies with part 15 of the FCC Rules. Operation is subject to the following two conditions: (1) This device may not cause harmful interference, and (2) this device must accept any interference received, including interference that may cause undesired operation.

This equipment has been tested and found to comply with the limits for a Class A digital device, pursuant to part 15 of the FCC Rules. These limits are designed to provide reasonable protection against harmful interference when the equipment is operated in a commercial environment.
This equipment generates, uses, and can radiate radio frequency energy and, if not installed and used in accordance with the instruction manual, may cause harmful interference to radio communications. Operation of this equipment in a residential area is likely to cause harmful interference in which case the user will be required to correct the interference at his own expense.

eco
RoHS compliant

Hanwha Techwin cares for the environment at all product manufacturing stages, and is taking measures to provide customers with more environmentally friendly products.
The Eco mark represents Hanwha Techwin's devotion to creating environmentally friendly products, and indicates that the product satisfies the EU RoHS Directive.

Correct Disposal of This Product (Waste Electrical & Electronic Equipment)

(Applicable in the European Union and other European countries with separate collection systems)

This marking on the product, accessories or literature indicates that the product and its electronic accessories (e.g. charger, headset, USB cable) should not be disposed of with other household waste at the end of their working life. To prevent possible harm to the environment or human health from uncontrolled waste disposal, please separate these items from other types of waste and recycle them responsibly to promote the sustainable reuse of material resources.
Household users should contact either the retailer where they purchased this product, or their local government office, for details of where and how they can take these items for environmentally safe recycling.
Business users should contact their supplier and check the terms and conditions of the purchase contract. This product and its electronic accessories should not be mixed with other commercial wastes for disposal.

Correct disposal of batteries in this product

(Applicable in the European Union and other European countries with separate battery return systems.)

This marking on the battery, manual or packaging indicates that the batteries in this product should not be disposed of with other household waste at the end of their working life. Where marked, the chemical symbols Hg, Cd or Pb indicate that the battery contains mercury, cadmium or lead above the reference levels in EC Directive 2006/66. If batteries are not properly disposed of, these substances can cause harm to human health or the environment.
To protect natural resources and to promote material reuse, please separate batteries from other types of waste and recycle them through your local, free battery return system.

FCC / Industry Canada RF Exposure Statement

-For NVR

This device must not be co-located or operation in conjunction with any other antenna or transmitter except complying with IC multi-transmitter requirements.

-For camera

This equipment complies with FCC / IC radiation exposure limits set forth for an uncontrolled environment. This equipment should be installed and operated with minimum distance 20cm between the radiator and your body.

-Pour la NVR

Ce dispositif ne doit pas etre situe a proximite ou a l'exploitation en conjunction avec une autre antenne ou emetteur, sauf conforme aux exigences IC multi-emetteur.

-Pour la camera

Cet équipement est conforme aux limites d'exposition aux rayonnements FCC / IC établies pour un environnement non contrôlé. Cet équipement doit être installé et utilisé avec un minimum de 20cm de distance entre la source de rayonnement et votre corps.

This device contains licence-exempt transmitter(s)/receiver(s) that comply with Innovation, Science and Economic Development Canada's licence-exempt RSS(s). Operation is subject to the following two conditions:
(1) This device may not cause interference.
(2) This device must accept any interference, including interference that may cause undesired operation of the device.

Le présent appareil est conforme aux CNR d'Industrie Canada applicables aux appareils radio exempts de licence. L'exploitation est autorisée aux deux conditions suivantes :
(1) l'appareil ne doit pas produire de brouillage
(2) l'utilisateur de l'appareil doit accepter tout brouillage radioélectrique subi, même si le brouillage est susceptible d'en compromettre le fonctionnement.

This radio transmitter 21482-SNC79447BW has been approved by Innovation, Science and Economic Development Canada to operate with the antenna types listed below, with the maximum permissible gain indicated. Antenna types not included in this list that have a gain greater than the maximum gain indicated for any type listed are strictly prohibited for use with this device.

Le présent émetteur radio 21482-SNC79447BW a été approuvé par Innovation, Sciences et Développement économique Canada pour fonctionner avec les types d'antenne énumérés ci-dessous et ayant un gain admissible maximal. Les types d'antenne non inclus dans cette liste, et dont le gain est supérieur au gain maximal indiqué pour tout type figurant sur la liste, sont strictement interdits pour l'exploitation de l'émetteur.

Antenna Information	Informations sur l'antenne
Antenna name : 2.4G SMA Antenna	Nom de l'antenne: 2.4G SMA Antenna
Frequency Range : 2400 ~2485 MHz	Gamme de fréquence: 2400 ~ 2485 MHz
Impedance : 50 (Ω)	Impédance: 50 (Ω)
Gain(dBi) : 2.55 dBi	Gain (dBi): 2,55 dBi
Connector Type : SMA	Type de connecteur: SMA
Polarization : Linear,Vertical	Polarisation: linéaire, verticale

Head Office
6, Pangyo-ro 319 beon-gil, Bundang-gu, Seongnam-si,
Gyeonggi-do, 463-400 Rep. of KOREA
Tel : +82.1588.5772 Fax : +82.31.8018.3740
www.wisenetlife.com

Hanwha Techwin America
500 Frank W. Burr Blvd. Suite 43 Teaneck, NJ 07666
Tel +1.844 WISENET (844.947.3638)
E-mail : cs@wisenetlife.com
www.wisenetlife.com

Hanwha Techwin Europe
Heriot House, Heriot Road, Chertsey, Surrey, KT16 9DT, United Kingdom
Tel : 00800.8010.8022 / +31.(0)13.5792.790
www.hanwha-security.eu

Hanwha
Techwin