Link CX-24

Pt-Pt Wireless 24GHz Microwave Radio

45 Mbps Full Duplex Ethernet or DS3 Throughput

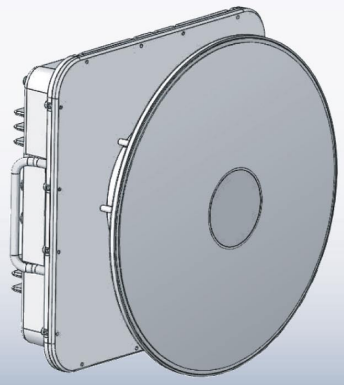

User's Manual

Version 1.0 MNL-500224-001 February 2004

8000 Lee Highway,
Falls Church VA 22042
Tel: (703) 205-0600 Fax: (703) 205-0610
Sales: 1-888-297-9090

www.ydi.com

990 Almanor Avenue
Sunnyvale, CA 94085
Tel: (408) 617-8150 Fax: (408) 617-8151
Sales: 1-800-664-7060

This document applies to the YDI Wireless (YDI) release of the Link CX-24 product line and to all subsequent versions and releases of the hardware or software unless otherwise indicated in a new version or an update package for this edition. The products described in this document are products of YDI Wireless or its licensers.

YDI Wireless reserves the right to make changes to any products described herein at any time without notice. YDI Wireless does not assume any responsibility or liability arising out of the application or use of any product described herein, except as expressly agreed to in writing by YDI Wireless, nor does the purchase or use of a product from YDI Wireless convey a license under any patent rights, copyrights, trademark rights, or any other of the intellectual property rights of YDI Wireless or third parties.

Use, duplication, or disclosure by the U.S. Government is subject to restrictions of FAR 52.227-14 (g) (2) (6/87) and FAR 52.227-19 (6/87), or DFAR 252.227-7015 (b) (6/95) and DFAR 227.7202-3 (a).

The software described in this document is furnished under a license agreement or nondisclosure agreement. The software may be used or copied only in accordance with the terms of the agreement. It is a violation of YDI Wireless proprietary rights to copy the software on any medium except as specifically allowed in the license or nondisclosure agreement.

The Link CX-24 product line is covered by one or more of the following United States Patents: No. 5,577,029, No. 5,654,968, No. 5,682,403, No. 5,721,735, No. 5,734,699, No. 5,734,979, No. 5,761,195, No. 5,781,582, No. 5,818,824, No. 5,842,138, No. 5,887,256, No. 5,953,651, No. 5,957,464, No. 5,999,813, No. 6,070,071, No. 6,078,823, No. 6,081,716, No. 6,101,400, No. 6,169,907, No. 6,173,177, No. 6,212,395, No. 6,269,255, No. USP D 391,967, No. USP D 391,968, No. USP D 397,693.

Changes or modifications not expressly approved by YDI Wireless in writing can void the user's authority to operate this equipment.

IMPORTANT OPERATING NOTICE

This device is to be exclusively used for fixed point-to-point operation with directional antennas.

PROFESSIONAL INSTALLATION REQUIRED

The Link CX-24 must be installed as a system by experienced antenna installation professionals who are familiar with Radio Frequency (RF) issues such as gains and losses, as well as local building and safety codes. Failure to do so will void the product warranty and may expose the end user to excessive RF hazard.

Regulations regarding maximum antenna gains, power output and maximum permissible exposure vary from country to country. It is the responsibility of the end user to operate within the limits of these regulations and to ensure that the professional installers who install this device are aware of these regulations. All antennas are intended to be installed outdoors.

MICROWAVE RADIO RADIATION WARNING

When installed properly, the Link CX-24 radio equipment complies with the limits for human exposure to radio frequency (RF) fields adopted by the Federal Communications Commission (FCC). All YDI Wireless microwave radio equipment is designed so that under normal working conditions, microwave radiation directly from the radio is negligible when compared with the permissible limit of continuous daily exposure recommended in the United States by ANSI/IEEE C95.1-1991 (R1997), Safety Levels with Respect to Human Exposure to Radio Frequency Electromagnetic Fields, 3 kHz to 300 GHz.

Microwave signal levels that give rise to hazardous radiation levels can exist within transmitter power amplifiers, associated RF multiplexers, and antenna systems. Never look into the front of an open RF connection or RF antenna as eyes are particularly vulnerable to radiation. Do not disconnect RF coaxial connectors, open microwave units, or break down any microwave screening while the radio equipment is operating.

FCC NOTICE

This device complies with part 15 of the FCC rules. Operation is subject to the following two conditions:

1. *This device may not cause harmful interference, and*
2. *This device must accept any interference received, including interference that may cause undesired operation.*

** Note: The manufacturer is not responsible for any radio or TV interference caused by unauthorized modifications to this equipment. Such modifications could void the user's authority to operate the equipment.*

These products are labeled with one of the following FCC ID numbers:

FCC ID: NM5-CX-DS3-ETH-24

© 2004 YDI Wireless. *All Rights Reserved. No part or parts of this document may be reproduced, translated, stored in any electronic retrieval system or transmitted, in any form or by any means, electronic, mechanical, photocopied, recorded or otherwise, without the prior written permission of YDI Wireless.*

TABLE OF CONTENTS

Section 1 Overview 1
1.1 Description 1
1.2 Regulatory Information 1
1.3 Products 1
1.4 Applications 2
1.5 System Overview 2
1.6 Features 4
1.7 Link CX-24 Basic Structure 4
1.8 Typical Applications 11
1.9 Specifications 11

Section 2 Installation 12
2.1 Introduction 12
2.2 Planning a Link CX-24 Network 12
2.3 Site Planning 13
2.4 Planning Element and Network Management Ethernet Links 14
2.5 Planning DS-3 Links 15
2.6 Power Planning 15
2.7 Transmit Power Planning 15
2.8 Radio Link Planning 16
2.9 Before Installing 18
2.10 Initial Configuration 21
2.11 Mounting the Link CX-24 30
2.13 Completing the Link CX-24 Installation 33
2.14 Aligning the Antenna 35
2.15 Acceptance Testing 37
2.16 Final Link CX-24 Configuration 40
2.17 Updating the Link CX-24 Software 41

Section 3 Monitoring and Trend Analysis 43
3.1 Built-In Web Server Interface 43
3.2 SNMP Network and Element Management Systems 43

Section 4 Troubleshooting the Link CX-24 45
4.1 Troubleshooting Tables 45
4.2 Using the Link CX-24 LEDs 45
4.3 Using RSSI 45
4.4 Using a Web Browser 46
4.5 Customer Support Services 46

Appendix A - Interface Cable Pinouts 47

Appendix B - Technical Specifications 49

Appendix C - Using the Web-Based GUI User Interface 52
C-1 Web Browser Requirements 52
C-2 Connecting A Web Browser 52
C-3 Accessing the Link CX-24 Web Pages 52
C-4 Link CX-24 Web Pages 52

Appendix D - Grounding and Lightning Protection **58**
D-1 Overview 58
D-2 Grounding 58
D-3 Lightning Protection 59

Appendix E - Enterprise MIBs and Traps **61**
E-1 Enterprise MIBs 61
E-2 Enterprise Traps 79

Bibliography **80**

FIGURES

Figure 1.1 – Link CX-24 Power Supply 2

Figure 1.2 – Typical Radio Link Configurations 3

Figure 1.3 – Link CX-24 Star Network 3

Figure 1.4 – Link CX-24 Interface Connectors and Indicators 5

Figure 1.5 – Integral Antenna and Link CX-24 Radio 7

Figure 2.1 – Preventing Multi-path Fading from Ground-Level Surfaces 13

Figure 2.2 – Typical EMS/NMS Ethernet Connections 15

Figure 2.3 – Link CX-24 Orderable Parts 20

Figure 2.4a – Link CX-24 Configuration Setup 22

Figure 2.4b – Link CX-24 Positive-Ground Power Connections 23

Figure 2.4c – Link CX-24 Negative-Ground Power Connections 23

Figure 2.5 – Typical DS-3 Link CX-24 Monitor Web Page 24

Figure 2.6 – Typical Ethernet Link CX-24 Monitor Web Page 25

Figure 2.7 – Typical DS-3 Link CX-24 Commission Radio Web Page 25

Figure 2.8 – Typical Ethernet Link CX-24 Commission Radio Web Page 26

Figure 2.9 – Typical DS-3 Link CX-24 Commission Manager Web Page 27

Figure 2.10 – Typical Ethernet Link CX-24 Commission Manager Web Page 28

Figure 2.11 – Typical Link CX-24 DS-3 Test Web Page 29

Figure 2.12 – Link CX-24 Mounting Components 30

Figure 2.13 – Setting the Link CX-24 Polarization – Vertical Polarization Shown 31

Figure 2.14 – Detail Showing Assembly of Pole Mounting Bracket to Unit (Vertical Polarization) 32

Figure 2.15 – Attaching the Link CX-24 Unit to the Pole 33

Figure 2.16 – Connecting an Earth Ground to the Link CX-24 34

Figure 2.17 – Final Line-of-Sight Adjustment and Signal Optimization 36

Figure 2.18 – Typical DS-3 Update Software Web Page 41

Figure 2.19 – Typical Ethernet Update Software Web Page 41

Figure C.1 – Link CX-24 Login Window (all models) 52

Figure C.2 – Link CX-24 DS-3 Monitor Web Page 53

Figure C.3 – Link CX-24 DS-3 Commission Radio Web Page 53

Figure C.4 – Link CX-24 DS-3 Commission Manager Web Page 54

Figure C.5 – Link CX-24 DS-3 Test Web Page 55

Figure C.6 – Link CX-24 DS-3 Update Software Web Page 55

Figure C.7 – Link CX-24 Ethernet Monitor Web Page 56

Figure C.8 – Link CX-24 Ethernet Commission Radio Web Page 56

Figure C.9 – Link CX-24 Ethernet Commission Manager Web Page 57

Figure C.10 – Link CX-24 Ethernet Test Web Page 57

Figure C.11 – Link CX-24 Ethernet Update Software Web Page 57

TABLES

Table 1.1 – Link CX-24 Models 4

Table 1.2 – Link CX-24 Interface Connectors and Indicators 6

Table 2.1 – Maximum Power Output by Model Configuration 16

Table 2.2 – Radio Link Planning Worksheet 16

Table 2.2 – Radio Link Planning Worksheet (continued) 17

Table 2.2 – Radio Link Planning Worksheet (continued) 18

Table 2.3 – Link CX-24 Radio Orderable Parts 20

Table 2.4 – Required Installation Tools 21

Table 2.5 – Physical Installation Checklist 37

Table 2.6 – Electrical Connection Checklist 38

Table 2.7 – DS-3 Internal Circuit and Radio Link Checklist 39

Table 2.8 – Ethernet Internal Circuit and Radio Link Checklist 39

Table 4.1 – Symptoms and Probable Causes 45

Table 4.2 – LEDs and Alarm Indication Modes 45

Table A.1 – DS-3 Data Cables 47

Table A.2 – 10/100 Ethernet Data or Control Cable 47

Table A.3 – DC Power Cable 47

Table A.4 – 10/100 Ethernet Crossover Cable 48

Table A.5 – RS-232 CLI Craft PC Cable 48

Table B.1 – Link CX-24 DS-3 or Ethernet Version (24 GHz) 49

Table B.1 – Link CX-24 DS-3 or Ethernet Version (24GHz) (continued) 50

Table B.2 – Integral Reflector Antenna 51

Section 1
Overview

1.1 Description

This manual is intended for the technical personnel who will install and operate the Link CX-24. Such personnel are typically experienced and skilled technicians familiar with on site, physical installation and connection of equipment, including maintenance work. It is also intended for system administration personnel performing initial configuration and subsequent system reconfiguration, as well as current system maintenance activities.

1.2 Regulatory Information

1.2.1 FCC Compliance

The Link CX-24 is FCC certified for use in the 24 GHz unlicensed band in the United States.

24GHz (24.05-24.250 GHz)
When deployed in an area regulated by the FCC, Link CX-24 radios operate under the FCC Part 15.249 band regulations for intentional radiators in a point-to-point configuration. The Link CX-24 radios are equipped with an integral antenna.

1.2.2 Other Regulation Compliance

Other countries have varying RF licensing and operating requirements, and it is imperative that operators and professional installers ensure that the Link CX-24 is configured and installed per regional regulations.

1.3 Products

The Link CX-24 product is a cost-effective, all-outdoor, pole-mounted, high-capacity, line-of-sight (LOS) digital radio transmission system, operating in the license-exempt 24.05-24.250 GHz (24GHz) frequency band. The Link CX-24 can be used for the following applications: point-to-point or building-to-building, WLL (wireless local loop), backup solutions, temporary links, and mesh cellular backhaul.

- The Link CX-24 DS-3 and 10/100 versions conform to the FCC (Federal Communications Commission) Part 15.249 It operates at up to 0 dBm average transmit power, and is intended for medium-distance use.

The Link CX-24 provides either a standard DS-3 (44.736 Mbps) interface adhering to Bellcore GR-499-CORE (DSX-3) standards, or provide two Ethernet 10/100Base-T interfaces adhering to IEEE 802.3 standards, with a combined nominal line rate of 45 Mbps.

Each Link CX-24 is powered by a 110/220 VAC to 48 VDC power supply (see Figure 1.1).

Figure 1.1 – Link CX-24 Power Supply

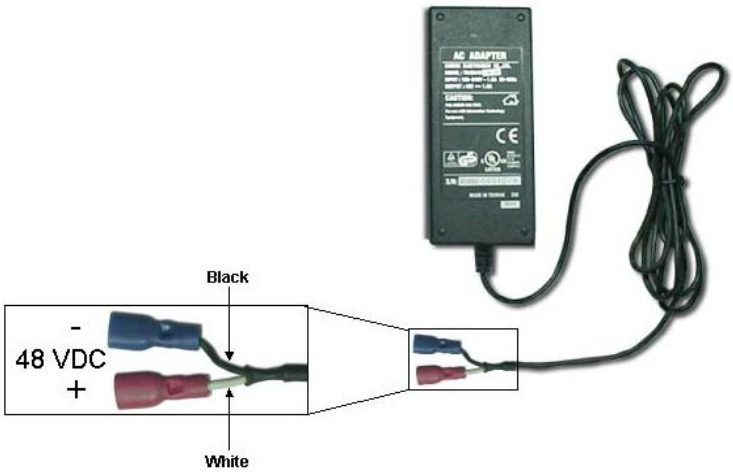

1.4 Applications

The Link CX-24 product line is designed to serve the following communications markets:

- Internet Access and Backhaul Systems: Used by Internet Service Providers (ISPs).
- Private Networks: Wireless Bridged LANs and WANs.
- PCS/PCN and Cellular Networks: High-speed links between base stations.
- Wireless Local Loop Networks: Fixed wireless, used by Local Exchange Carriers (LECs).
- Business Bypass or Local Exchange Bypass: Provided by Competitive Access Providers (CAPs) and Competitive Local Exchange Carriers (CLECs).

1.5 System Overview

Each Link CX-24 consists of a Link CX-24 radio, with integral antenna as shown in Figure 1.2, along with external power and data cabling. In a typical installation, the Link CX-24 radio with integral antenna is mounted outdoors, usually on a tower or building.

See Figure 1.2. A radio system, or link, contains two Link CX-24 radios with integral antenna, installed at each end of the link, separated by a line of sight transmission path. Frequency band, terrain, actual line-of-sight and environmental conditions influence the range of operation and path performance.

The Link CX-24 carries one full-duplex DS-3, or Ethernet channel, and is powered by a 48-watt external 48 VDC power supply.

Figure 1.2 – Typical Radio Link Configurations

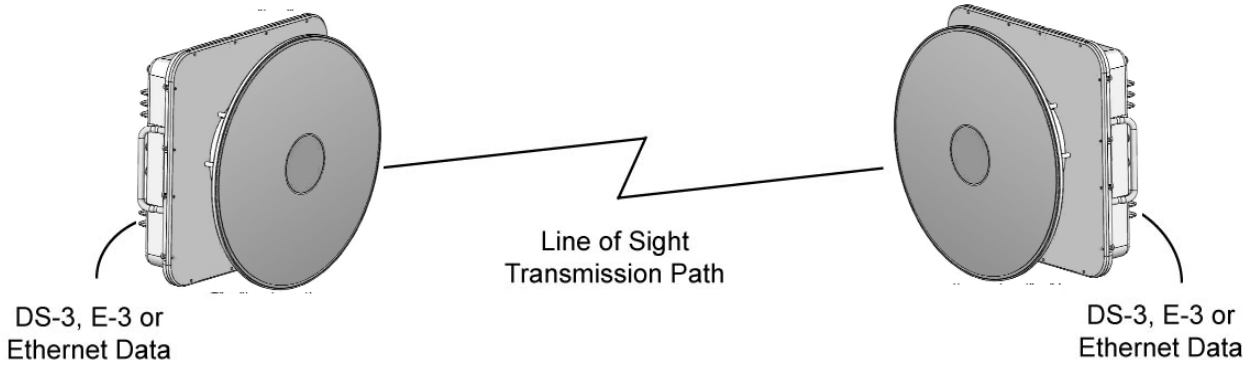

Because the Link CX-24 offers both high and low channels in a single band, and can be installed with horizontal or vertical polarization, up to four Link CX-24 radios can be mounted at each hub, or node, to form part of a star or mesh network. See Figure 1.3.

Figure 1.3 – Link CX-24 Star Network

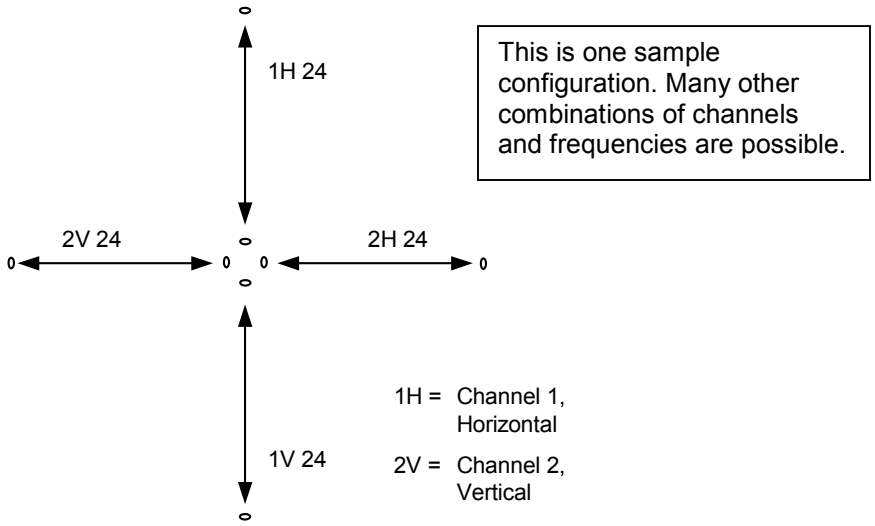

1.6 Features

The Link CX-24 offers the following features:

- Robust all-outdoor enclosure.
- Integral antenna.
- Sturdy radio mounting systems for quick, accurate and reliable integral antenna alignment.
- Operates in the license-exempt 24.05-24.250GHz (24GHz) band.
- Full-duplex transmission:
- DS-3 (DSX-3, per Bellcore GR-499-CORE)
- Ethernet 10/100Base-T (per IEEE 802.3)
- Easy configuration, installation, operation, and maintenance.
- Integral web server for configuring, operating, and monitoring using an HTML-based web browser GUI.
- Ethernet interface used with NMSs (Network Management Systems) or EMSs (Element Management Systems) using SNMP (Simple Network Management Protocol) traps. Supports MIB-II (Management Information Base II) and YDI Wireless enterprise MIB.
- ATPC (Automatic Transmit Power Control).
- Self Test, BER test mode, RF and digital loop-backs.
- Reed Salomon Forward Error Correction (FEC).
- Operating and backup software versions contained in Link CX-24 memory, operator-selectable.

1.7 Link CX-24 Basic Structure

1.7.1 Radio Links

Each radio link includes two Link CX-24 terminals. Each terminal consists of a Link CX-24 radio with an integral 12" diameter reflector antenna. Generally, the Link CX-24 terminals are mounted outdoors on a tower or building.

1.7.2 Data Stream

The DS-3 or Ethernet data signals enter the Link CX-24 and are modulated into the RF data stream. The RF radio signal radiates from the local antenna and propagates to the remote antenna. At the remote terminal, the received signal is demodulated and de-multiplexed, separating the payload data and the overhead management data.

1.7.3 Link CX-24 Models

The Link CX-24 is manufactured in two configurations, namely versions with DS-3 or Ethernet carried over the 24GHz link.

Link CX-24 models are described in Table 1.1.

Table 1.1 – Link CX-24 Models

Model	Transmit Band	Frequency Band	Link Carries	Antenna
CX-DS3-24-LO CX-DS3-24-HI	High Low	24.05-24.250 GHz	DS-3	Integral 12" reflector
CX-ETH-24-LO CX-ETH-24-HI	High Low	24.05-24.250 GHz	Ethernet (45 Mbps)	Integral 12" reflector

1.7.4 Mounting and Antenna Alignment

To ensure proper mounting and antenna alignment, YDI sells a mounting bracket designed for use with the Link CX-24. The single bracket mounts one Link CX-24. The bracket is designed to provide rugged mounting for the Link CX-24, while allowing fine adjustment for antenna alignment.

1.7.5 Interface Connectors and Indicators

See Figure 1.4 for a view of the Link CX-24 external connectors and indicators. The Link CX-24 connectors and indicators are described in Table 1.2.

Figure 1.4 – Link CX-24 Interface Connectors and Indicators

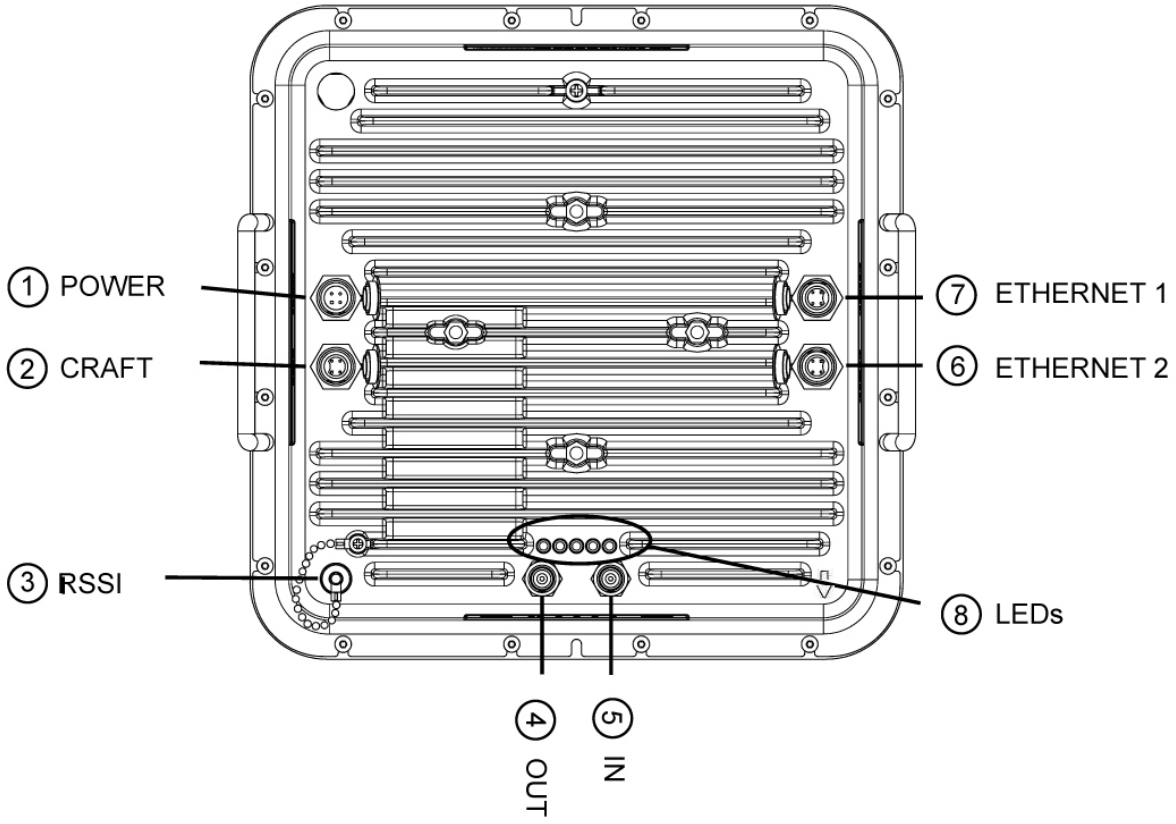

Table 1.2 – Link CX-24 Interface Connectors and Indicators

No.	Name	Component	Description	From	Note
1	POWER	Male 4-Pin Circular Connector	Power input plug	Power Supply	Accepts ±21 to ±60 VDC
2	CRAFT	Female 4-Pin Circular Connector	RS-232 receptacle	Asynchronous laptop port	1200 to 115,200 baud, used only for tech support troubleshooting
3	RSSI	Female BNC Connector	Receive Signal Level Indicator	Voltmeter	Verifies RF signal strength, used to align antenna
4	OUT	Female TNC Connector	DS-3 data from the radio link	DS-3 data equipment	--
5	IN	Female TNC Connector	DS-3 data to the radio link	DS-3 data equipment	--
6	ETHERNET 2	Female 4-Pin Circular Connector	10/100Base-T transmit and receive receptacle	Ethernet equipment	For Ethernet data or link to SNMP or Web manager, or use to daisy-chain Ethernet port to next Link CX-24 in cascade
7	ETHERNET 1	Female 4-Pin Circular Connector	10/100Base-T transmit and receive receptacle	Ethernet equipment	(Same as ETHERNET 2)
8	PWR/LCL ALM	Green LED	Power/Local Alarm Status	--	ON = Power OK, no alarm, Flashing = Local alarm, OFF = Power off.
	RF LINK	Green LED	Radio Link Status		ON = Rcv. OK, OFF = Link Alarm.
	DATA	Green LED	DS-3 Status		ON = OK (no LOS), OFF = LOS.
	ENET 2	Green LED	Ethernet Status		ON = OK, Flashing = data, OFF = No conn.
	ENET 1	Green LED	Ethernet Status		ON = OK, Flashing = data, OFF = No conn.

Note: For connector pin-outs, refer to Appendix A.

1.7.6 Cables

To ensure longevity in an outdoor environment, YDI sells various cables designed for use with the Link CX-24.YDI offers the following weather-resistant cables:

- DS-3, Ethernet data cables and the power cables are offered in 25 m (82 ft.), 50 m (164 ft.), and 100 m (328 ft.) lengths.
- A 6 m (19.7 ft.) Ethernet cable is available to route the Ethernet signal between two Link CX-24 in the same location, or when you are configuring the Link CX-24 from a Craft PC.
- A 6 m (19.7 ft.) RS-232 4-pin Circular-to-DB9 Craft cable is available to connect a Craft PC to a Link CX-24 for future CLI applications.

All of the cables described above include weather-resistant connectors.

1.7.7 Integral Antenna

The integral antenna is a 12" diameter reflector antenna mounted directly on the Link CX-24 radio chassis, as shown in Figure 1.5. All RF connections between the integral antenna and the Link CX-24 radio are made internally, eliminating the need for external coaxial cabling. Because the integral antenna is sealed onto the Link CX-24 chassis, the Link CX-24 and integral antenna are mounted as a unit, and share the same environmental protection. An arrow on the connector side of the Link CX-24 chassis indicates the antenna polarization (either vertical or horizontal).

Figure 1.5 – Integral Antenna and Link CX-24 Radio

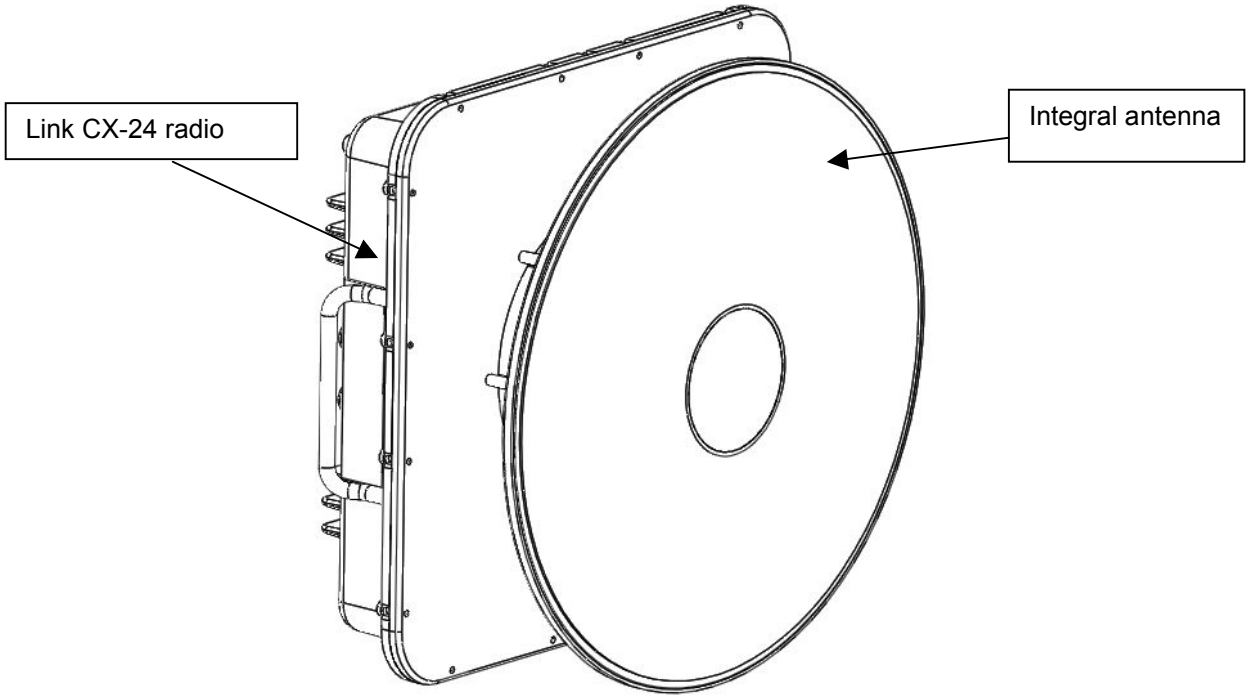

1.7.8 Configuration, Operation, and Monitoring

The Link CX-24 and radio link are configured, operated and monitored through one of five user interfaces. The five interfaces are:

- A built-in web server GUI hosted by the Link CX-24, which can be accessed by any local or remote computer equipped with a web browser. This is the interface most operators will use to interact with the Link CX-24. The web browser can access the Link CX-24 built-in web server through either the ETHERNET 1 or ETHERNET 2 port.
  Note that the ETHERNET 1 and ETHERNET 2 ports are functionally equivalent, and that they are both served by an onboard Ethernet controller. The controller automatically switches polarity on the transmit and receive pairs when they are reversed, eliminating the need for crossover cables.
- SNMP traps, which communicate with MIB-II compliant NMSs (Network Management Systems) and EMSs (Element Management Systems). This interface is used by operators who want real-time notification of radio problems. The Link CX-24 sends SNMP traps to NMSs and EMSs over Ethernet links through either the ETHERNET 1 or ETHERNET 2 port.
- An ASCII command line interface, accessible through the RS-232 Craft port, or through the ETHERNET 1 or ETHERNET 2 port using telnet. This interface is primarily used by YDI technical support personnel when performing detailed troubleshooting.
- The RSSI port, providing a DC voltage level proportionate to the received RF signal level, and allowing installers to use a DC voltmeter to fine-tune antenna alignment. This interface is primarily used during installation, but the current RSSI measurement is also available via the Link CX-24 built-in web server or via SNMP polls.
- Five LEDs that provide visual alarm status. They verify proper operation of the Ethernet ports, DS3 ports, and radio link, and indicate proper power input and radio operation. These LEDs are usually used during installation to provide a quick product verification.

1.7.9 SNMP

The Link CX-24 radio supports SNMP network management. SNMP is a protocol that defines the method of communicating with and controlling network devices.

Devices that support the SNMP protocol can be queried for their status and other device information. Some devices allow changing device settings or configurations using SNMP commands. The device settings and other device data are available as variables. They are defined in the standard Management Information Base (MIB) file, provided by the device manufacturer. The SNMP manager uses a database to hold lists of variables that can be accessed for each device on the network. The device data can be displayed in tables, graphs, or saved in a file.

1.7.10 Link CX-24 Network Management Architecture

Link CX-24 software network management is comprised of two main items:

- SNMP based Network Management System (NMS) application in the network management workstation.
- SNMP agent in the Link CX-24.

The workstation manages all Link CX-24 assigned unique IP addresses. The workstation also provides a graphical display of the network objects showing the status, performance, and configuration parameters of each Link CX-24 radio.

The SNMP local agent is a standard MIB-II compliant software module that resides in each Link CX-24. The agent collects information from different Link CX-24 components as defined in the Management Information Base (MIB) structure. The Link CX-24 incorporates both standard and private MIBs.

Different Link CX-24s are distinguished by their customer-assigned IP addresses. The Web browser

communicates with the Link CX-24 using TCP/IP (Transmission Control Protocol/Internet Protocol) and HTTP (Hyper Text Transfer Protocol).

The NMS data transfer between the manager and the agents is accomplished using either polling or trapping techniques.

Polling
The NMS polls each Link CX-24 SNMP agent at specific intervals. These are set according to user requirements during SNMP NMS configuration.

Traps
The Link CX-24 agent sends an SNMP trap to the manager whenever a predefined event occurs. Groups of traps can be defined according to their level of severity. The operator can choose to enable or disable any traps or group of traps according to their level of severity (and his or her own security level). Traps can be logged using any standard SNMP manager.

1.7.11 NMS Connectivity

The NMS workstation can access any Link CX-24 using its IP address. The NMS workstation can connect to each Link CX-24 using any of the following methods:

- 10/100 Base-T Ethernet – accessing Link CX-24s via a LAN through hubs, switches or routers.
- Cascading Ethernet links transport NMS information between collocated Link CX-24s. This is done by daisy-chaining the ETHERNET 1 and ETHERNET 2 ports between Link CX-24 radios using straight-pinned or crossover Ethernet cables.

1.7.12 Web-Based GUI Access Security

Access to the Web-based GUI (graphical user interface) is limited by username and password, which is available at different levels of security as follows:

- User – Read only privilege.
- Administrator – Read/partial write privilege. The administrator cannot cause a radio link to reset by changing critical parameters.
- Supervisor – Full read/write privilege.

1.7.13 GUI Functions

The Web-based GUI monitors and controls the main functions of the Link CX-24. These functions are listed below and detailed in the following sections:

- Configuration management
- Status and fault management
- Test activation and monitoring
- Software downloading
- Performance monitoring

Refer to Appendix C for Link CX-24 GUI operating instructions.

Configuration Management
The NMS software can be used to configure the parameters of the Link CX-24 radio, although this is normally done using a web browser GUI. This includes the setup of templates with predetermined default values, relating to both the parameters of common element types and the validation of parameter values. It also includes saving and loading configuration files for individual Link CX-24 radios.

The NMS also controls the uploading and downloading of individual parameter values, and complete configuration setups.

Parameter configuration is terminal-oriented. Every configuration session deals with the Link CX-24 as accessed by its particular IP address. Some of the parameters, such as RF channel number, link ID, etc. affect the Link CX-24s on both ends of the radio link. Special care should be taken to activate the new parameter values consistently on both ends of the radio link.

Status and Fault Management
Status and fault management involve a selective display of failures alerting the user to take actions according to a decision making tree.

Some status indications and alarms may report conditions that pertain to both ends of the radio link. These ends are commonly referred to as local and remote.

Note that the 'local' system is the Link CX-24 you are logged into, and the 'remote' Link CX-24 is the one at the far end of the radio link. Thus, when you are logged into the far end Link CX-24 on a radio link that terminates at your current physical location, the far end Link CX-24 is 'local' and the near end Link CX-24 is 'remote'.

Test Activation and Monitoring
Following is a brief description of the tests that can be invoked and monitored by the Web based NMS.

Loop-backs
The loop-backs are incorporated into the radio to assist in detecting equipment/component/cable failure during both installation and normal operations. Loop-backs are user initiated. The Link CX-24 DS-3 and versions support RF and various interface loop-backs. (Note that loop-backs are not supported on the Link CX-24 Ethernet versions, as any loop-back could result in an immediate data storm. Instead, YDI recommends that customers use external equipment to Ping (use Packet Internet Groper) to test their Ethernet paths.

BER Test
The following Bit Error Rate (BER) test is provided by the DS-3 and Link CX-24 versions:

- Pseudo random signal generator - capable of inserting a standard test signal for BER measurements, and local- and remote-end loop-back functions.
- BER measurements of radio link performance under normal operating conditions.

Software Downloading
The Web-based user interface enables off-line operation and SNMP updates of files. Alternatively, when on-line, configuration can be updated from the NMS to the Link CX-24 agent. Another way to upgrade multiple Link CX-24s is to use FTP (File Transfer Protocol).

Note that the Link CX-24 can hold two software loads in memory, which facilitates upgrading and reverting to a previous software version.

Some factory default software settings are always retained at the Link CX-24 to safeguard against complete failure of communications caused by equipment restart.

Performance Monitoring
Each Link CX-24 gathers various statistics regarding radio link performance. The Web based user interface can retrieve and analyze these statistics upon demand. In addition, the Web based user interface manager processes its own general statistical data, based on the information that is received. Current BER, Receive Signal Strength Indicator (RSSI), and other performance monitors are available for the radio link.

The Web-based user interface is designed to easily interface with optional graph management software packages for sophisticated performance presentation.

1.8 Typical Applications

Link CX-24 gives the user great flexibility in setting up point-to-point radio links on a very cost effective basis, because it avoids unnecessary outlays in expensive leased lines or fiber optic land-based lines. Low cost of ownership makes return on investment (ROI) attractive compared to leased lines.

Link CX-24 advantages over copper/fiber alternatives include: short installation time, easy maintenance using NMS software, independence of competing PTTs, avoiding the need to secure normal right-of-way and/or physical installation permits, and ability to re-deploy in order to meet changing needs.

The simplicity of the Link CX-24 installation makes it easy for the user to implement Link CX-24 in a variety of applications. It also means that the user can conveniently move a previously installed Link CX-24 to a new location to meet the requirements of a changing system. Link CX-24 enables seamless future software upgradability, protecting customer investment, reducing logistics, spare parts and product stocking. The following sections briefly describe typical applications.

1.8.1 Internet (ISP)

The appetite for higher Internet access speeds requires faster ISP access and backhaul and ISP connections to businesses. The Link CX-24 radio is perfectly suitable for both backbone and direct end-user connectivity.

1.8.2 Private Network Wireless Bridged LANs and WANs

Link CX-24 radios are also used to provide communications links for private networks. For companies requiring frequent communications into areas without extensive telecommunications infrastructure or in areas where the cost of local access is high, installing and maintaining a Link CX-24 radio network can be very cost effective. Typical users of private networks include: government agencies such as land management, municipal agencies, and universities; large utilities such as oil, gas, and electric concerns; and companies with widely deployed assets such as railroads and timber resource managers.

1.8.3 PCS/PCN and Cellular Networks

Cellular operators mainly use Link CX-24 radio links for Base Transceiver Station (BTS) interconnections, BTS to Base Station Controller (BSC), and BSC to BSC interconnections.

1.8.4 Wireless Local Loop Networks and Local Exchange Bypass

Wireless systems in emerging markets were originally deployed to provide premium services to a mobile subscriber base. However, middle and lower income countries have driven mobile network providers into a new business - the substitution of wireless service for fixed service, so-called fixed wireless networks, providing a cost-effective solution in situations where no wireless infrastructure exists. Wireless local loop (last mile) networks are implemented mostly by Local Exchange Carriers (LECs).

Alternative carriers, such as Competitive Access Providers (CAPs) and Competitive Local Exchange Carriers (CLECs) use radio links to establish standard telecommunications links between their customers' sites and their own backbone networks. This way CAPs and CLECs provide their customers with cost-effective local area telephone service and cheaper long distance services.

1.8.5 Business Bypass and Local Exchange Bypass

The Link CX-24 radio is a perfect solution for Business Bypass and Local Exchange Bypass applications.

1.9 Specifications

Refer to Appendix B for Link CX-24 specifications.

Section 2
Installation

Safety Warning

CAUTION

This antenna/transmitter device must be fixed-mounted on outdoor permanent structures with a separation distance of at least 2 meters (6.56 feet) from all persons. Users and installers must adhere to the antenna installation instructions and transmitter operating conditions in order to comply with the FCC's RF exposure requirements.

2.1 Introduction

The Link CX-24 is intended for professional installation only. However, this manual is also designed for personnel who plan, operate and administer the Link CX-24 communication system. Please review the entire manual before powering up or deploying any Link CX-24.

Note: It is strongly recommended that you configure and test the units prior to deploying them in the field. Set up a "mini-network" that resembles your actual configuration as close as possible. By using such a mock-up, troubleshooting potential problems will be much easier than if you already installed the equipment in the field. Read through this entire Section 2 to understand how to install the hardware.

2.2 Planning a Link CX-24 Network

As described in Section 1.8, the Link CX-24 can be used to support a number of applications. However, the most common configuration is a point-to-point network. Point-to-point configurations (Figure 1.1) are easiest to plan and implement, as the radio links merely transmit industry-standard formatted data from one location to another.

Generally, the common points to consider when planning a Link CX-24 network are:

Line of Sight: Unlike some frequency bands, the Link CX-24 radios must be within line of sight of each other. That is, the far-end antenna must be visible from the near-end antenna. If there are trees, buildings, mountains, or other obstructions between the two antennas, the Link CX-24s on each end of the radio link will be unable to communicate with each other. Make sure the Link CX-24 radios used in each radio link are within line of sight of each other. Refer also to the Fresnel Zone Clearance section that follows.

Fresnel Zone Clearance: There must be sufficient open space around the direct line of sight to minimize interference with the radio beam. At a minimum, 60% of the first Fresnel zone of the path should be clear. Even with clear line-of-sight, objects still may be near enough to the transmission path to cause problems. Obviously, objects that stand directly in the transmission path obstruct the beam, causing a drop in signal strength at the receiving end; in addition, objects and reflective surfaces that are in near proximity to the path can cause signal interference and attenuation of the received signal.

Fresnel zones define the amount of clearance required for obstacles. These zones are series of concentric ellipsoid surfaces that surround the straight-line path between the two antennas. The first Fresnel zone is defined as the surface containing every point for which the distance from the transmitter to any reflection point on the surface and then on to the receiver is one-half wavelength longer than the

direct signal path. The Fresnel zone surrounds the direct signal path, so it affects objects to the side of the path as well as objects directly in the path.

For a calculation of the Fresnel Clearance Zone, please refer to:

http://www.ydi.com/calculation/fresnel-zone.php.

Multipath Fading: See Figure 2.1. Because a Link CX-24 terminal typically transmits its strongest signals in a cone-shaped pattern, some of the signal may be reflected from a nearby building, from water under the signal path, or from other RF reflectors. This reflected signal can then be received by the far-end Link CX-24 and superimposed on the main signal, usually degrading the signal strength. To avoid multi-path fading, YDI recommends that you install the Link CX-24 antenna on the back, rather than the front, of buildings to avoid multi-path fading from water or other ground-level surfaces, and that you plan radio links away from nearby buildings.

Figure 2.1 – Preventing Multi-path Fading from Ground-Level Surfaces

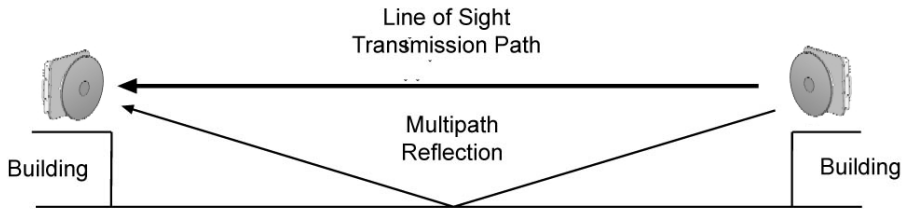

A. Link CXs Mounted on Front of Builing Experience Multipath Fading

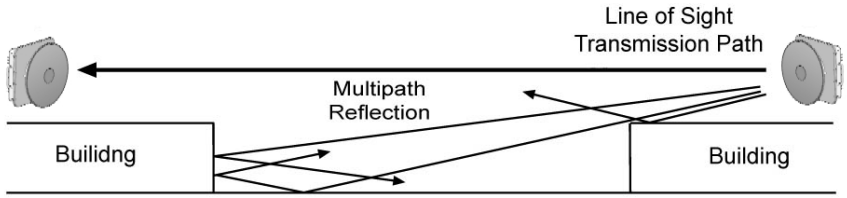

B. Link CXs Mounted on Back of Building Eliminate Multipath Fading

External Interference: Because the Link CX-24 operates in an unlicensed band, YDI strongly recommends that you use a spectrum analyzer at both ends of planned radio links, with the receiving antenna as close to the proposed Link CX-24 antenna mounting spot as possible. Use a polarized antenna, and scan for both horizontally- and vertically-polarized interfering radiation. If you find external interference in either of the two (High or Low) bands, configure the Link CX-24 for the least-impacted band. Refer to Table 2.2 for the High and Low bands for the Link CX-24 radio.

2.3 Site Planning

Each proposed Link CX-24 terminal site requires a site survey and plan for the following:

Power: The Link CX-24 radio requires a +/-21 to +/-60 VDC power source. Make sure required power supply is available before installing the Link CX-24.

Mounting Point: The Link CX-24 is usually mounted on a vertical mast or pole mounted on a building or a tower. The Link CX-24 mounting bracket can accommodate a 4.5 to 7.6cm (1.75" to 3" OD) diameter mast or pole.

Grounding and Lightning Protection: The Link CX-24 radio requires adequate grounding and lightning

protection. If the mounting point described above provides adequate lightning protection, the Link CX-24 radio will still need a good earth ground to a bare-metal earth ground. Refer to Appendix D for detailed grounding and lightning protection recommendations.

Cable Routing: The Link CX-24 DS-3, and/or Ethernet data cables connect associated external equipment to the Link CX-24 radio. Before installation, procure cable ties and/or standoffs to route and to create service loops for these cables.

Physical Security: The Link CX-24 radio is typically mounted high enough to prevent casual tampering. The Link CX-24 radio is further protected by anti-tampering chassis screws that prevent most casual attempts to open the chassis.

2.4 Planning Element and Network Management Ethernet Links

2.4.1 Links From the EMS or NMS to the Link CX-24

The Link CX-24 communicates with SNMP-based Element Management Systems and Network Management Systems over Ethernet communication links. Because the Link CX-24 contains two independent switched Ethernet ports, one Link CX-24 can be connected directly to an Ethernet switch or router, and collocated Link CX-24s can be cascaded. Figure 2.2 shows some common arrangements for the EMS and/or NMS Ethernet links.

The cable run from the Ethernet switch or router to the Link CX-24 must be 100 m (328 ft.) or less, and can be straight-through or crossover, because the Link CX-24 Ethernet ports automatically detect the transmit and receive pairs and switch them if necessary. YDI sells 25 m (82 ft.), 50 m (14 ft.), and 100 m (328 ft.) Ethernet cables with the correct connectors for these links, as described in Section 1.7.6. Alternatively, when Link CX-24s are to be cascaded as shown in Figure 2.2 (B), YDI sells a 6 m (20 ft.) Ethernet cable with the correct connectors for the Link CX-24-to-Link CX-24 links, as described in Section 1.7.6. Note that the EMS or NMS must be within eight or fewer Ethernet hops of the Link CX-24 for proper communications.

2.4.2 Links Between Link CX-24s

As shown in Figure 2.2, the near end Link CX-24 automatically sets up an Ethernet connection to the Link CX-24 at the far end of each radio system, or link. In Ethernet models, the in-band Ethernet connection uses the payload data Ethernet link, while in DS-3 models the Ethernet connection is out-of-band, and does not interfere with the DS-3 payload data. Because the Link CX-24-to-Link CX-24 Ethernet connection cannot be turned off, make sure you do not connect both ends of the Link CX-24-to-Link CX-24 to the Ethernet. This will help prevent Ethernet loops and potential data storms.

Figure 2.2 – Typical EMS/NMS Ethernet Connections

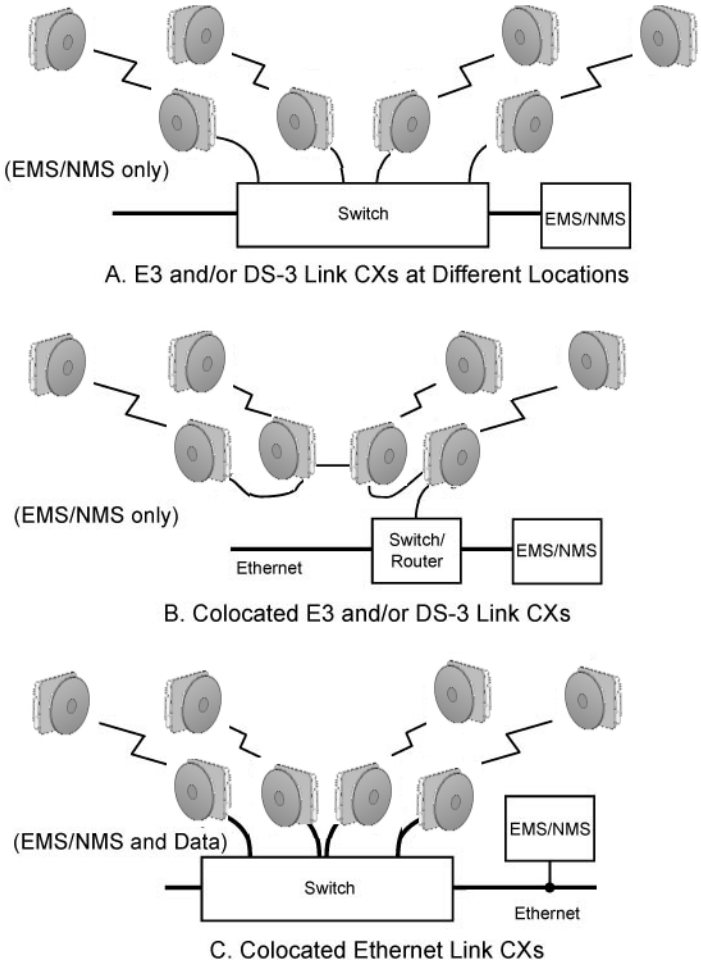

2.5 Planning DS-3 Links

The Link CX-24 DS-3 version uses paired 75 Ohm cables with male TNC connectors for the transmit and receive data from external DS-3 equipment. YDI sells 25 m (82 ft.), 50 m (14 ft.), and 100 m (328 ft.) DS-3 cables with the correct connectors for these links, as described in Section 1.7.6.

2.6 Power Planning

YDI sells 25 m (82 ft.), 50 m (14 ft.), and 100 m (328 ft.) power cables with the correct connectors for Link CX-24 power, as described in Section 1.7.6.

2.7 Transmit Power Planning

The Link CX-24 normally uses a manually-set output power level. When Automatic Transmit Power Control (ATPC) is enabled, the far-end Link CX-24 terminal provides feedback to the near-end Link CX-24 to set the transmit power to the lowest level required for clear data transmission.

Transmit power can be attenuated by 40 dB for initial configuration and interference isolation. Also, a maximum transmit power level can be set (whether or not ATPC is enabled) between –30 dBm and 0 dBm to prevent interference with other RF receivers.

2.7.1 Maximum Link CX-24 Power Output

The Link CX-24 can be ordered in two different configurations. Table 2.1 shows the maximum power output for each case.

Table 2.1 – Maximum Power Output by Model Configuration

Model	Frequency Band	Link Carries	Antenna	Max Tx Power
CX-DS3-24-HI CX-DS3-24-LO	24.05-24.250GHz -- Per FCC Regulations	DS-3 (45 Mbps)	Integral	0 dBm +34.5 dBi = +34.5 dBm Average EIRP
CX-ETH-24-HI CX-ETH-24-LO	24.05-24.250GHz -- Per FCC Regulations	Ethernet (45 Mbps)	Integral	0 dBm +34.5 dBi = +34.5 dBm Average EIRP

2.7.2 Calculating the Required Transmit Power

The Link CX-24 will normally use the maximum transmit power listed in Table 2.1, but may need to be attenuated when there are other receivers beyond the remote Link CX-24 terminal (for instance, in a mesh network). In this case, the professional installer must use the free-space calculation to determine the actual Maximum Transmit Power to prevent interference.

2.8 Radio Link Planning

As described in Section 1.7, each radio link requires a Link CX-24 at each end of the link. Before you start installing the Link CX-24s, make a copy of Table 2.2 and fill in the information for both ends of the radio link:

Table 2.2 – Radio Link Planning Worksheet

	Link CX-24 1 - High	Link CX-24 2 - Low
Information Common to Both Link CX-24 Radios		
Radio Link Name:		
Radio Link Information:		
Radio Link Polarization (pick one, must be the same for both):	HORIZONTAL	VERTICAL
Radio Link Payload (as ordered, must be the same for both):	DS-3	Ethernet
Information Unique to Each Link CX-24 Radio		
Model Number (see Link CX-24 Label & Table 1.1)	CX- _ _ _ -24- _ _ (high band)	CX- _ _ _ -24- _ _ (low band)

Table 2.2 – Radio Link Planning Worksheet (continued)

	Link CX-24 - High Band	**Link CX-24 - Low Band**
Radio Link Channel and Band Center Frequency (pick one pair, each end of the radio link must be different)	Channel 1 High Band, Tx– 24.212GHz/ Rx– 24.072GHz (default)	Channel 1 Low Band, Tx– 24.072GHz/ Rx– 24.212GHz
	Channel 2 High Band, Tx– 24.228GHz/ Rx– 24.088GHz	Channel 2 Low Band, Tx– 24.088GHz/ Rx– 24.228GHz
Transmit Attenuation (default = Disabled)	Enabled Disabled	Enabled Disabled
Maximum Transmit Power (refer to Section 2.7)	__ dBm	__ dBm
Automatic Tx Power Control (refer to Section 2.7)	Enabled Disabled	Enabled Disabled
IP Address (must be different, obtain from IP network planner)	_ _ _ . _ _ _ . _ _ _ . _ _ _	_ _ _ . _ _ _ . _ _ _ . _ _ _
Subnet Mask (obtain from IP network planner)	_ _ _ . _ _ _ . _ _ _ . _ _ _	_ _ _ . _ _ _ . _ _ _ . _ _ _
Default Gateway (obtain from IP network planner)	_ _ _ . _ _ _ . _ _ _ . _ _ _	_ _ _ . _ _ _ . _ _ _ . _ _ _
RSSI Alarm Level (default = -70 dBm)	- __ dBm	- __ dBm
Alarm on Loss of DS-3 or Ethernet Input Signal	Enabled Disabled	Enabled Disabled
Login Name (up to 19 printable ASCII characters) Note that the login name is case-sensitive.		
Login Password (8 – 19 printable ASCII characters) Note that the password is case-sensitive.		
Allow Login From IP Addresses (don't forget Craft PC)	Any (default) –OR- _ _ _ . _ _ _ . _ _ _ . _ _ _ _ _ _ . _ _ _ . _ _ _ . _ _ _	Any (default) –OR- _ _ _ . _ _ _ . _ _ _ . _ _ _ _ _ _ . _ _ _ . _ _ _ . _ _ _

Table 2.2 – Radio Link Planning Worksheet (continued)

	Link CX-24 - High Band	**Link CX-24 - Low Band**
SNMP Trap Community (default = public, up to 19 ASCII characters starting with an alpha character, including numbers and - _ .)		
Send SNMP Traps to	_ _ _ . _ _ _ . _ _ _ . _ _ _ _ _ _ . _ _ _ . _ _ _ . _ _ _ _ _ _ . _ _ _ . _ _ _ . _ _ _	_ _ _ . _ _ _ . _ _ _ . _ _ _ _ _ _ . _ _ _ . _ _ _ . _ _ _ _ _ _ . _ _ _ . _ _ _ . _ _ _
Read/Write Community (default = public, up to 19 ASCII characters starting with an alpha character, including numbers and - _ .)		
Allow Read/Write Access From	Any (default) -OR- _ _ _ . _ _ _ . _ _ _ . _ _ _ _ _ _ . _ _ _ . _ _ _ . _ _ _ _ _ _ . _ _ _ . _ _ _ . _ _ _	Any (default) -OR- _ _ _ . _ _ _ . _ _ _ . _ _ _ _ _ _ . _ _ _ . _ _ _ . _ _ _ _ _ _ . _ _ _ . _ _ _ . _ _ _
Read-Only Community (default = public, up to 19 ASCII characters starting with an alpha character, including numbers and - _ .)		
Allow Read-Only Access From	Any (default) -OR- _ _ _ . _ _ _ . _ _ _ . _ _ _	Any (default) -OR- _ _ _ . _ _ _ . _ _ _ . _ _ _
System Name (optional, up to 255 ASCII characters)		
System Contact Information (optional, up to 255 ASCII characters)		
System Location (optional, up to 255 ASCII characters)		

2.9 Before Installing

2.9.1 General Guidelines

The installation, maintenance, or removal of antenna systems requires qualified, experienced personnel. Link CX-24 installation instructions have been written for such personnel.

Since Link CX-24 is easy to install, a previously installed Link CX-24 can be conveniently moved to a new location. Re-deployment allows the user to meet the requirements of a changing system with minimal effort and expense. Thus, installation personnel should assume that the activities described in this chapter are not one-time procedures but will have to be repeated from time to time.

This manual assumes that the site power and grounding have already been installed. This manual also assumes that the antenna mounting pole is in place before installing the Link CX-24. When installing and aligning a Link CX-24 radio or associated radio link, the user should always have on hand the required tools, test equipment and any other required miscellaneous installation devices and materials.

YDI disclaims any liability or responsibility for the results of improper or unsafe installation practices.
This device is to be exclusively used for fixed point-to-point operation with directional antennas.
Before you continue with this installation, make sure you have a filled-out copy of the Radio Link Planning Worksheet found in Section 2.8.

Note: The Link CX-24 electronics have been designed to be maintenance free, and the outdoor components are very rugged. However, because of continued exposure to weather, it is recommended that qualified personnel inspect antenna systems once a year to verify proper installation, maintenance, and condition of equipment.

2.9.2 Equipment and Unpacking

Each Link CX-24 radio is shipped with the Link CX-24 User's Manual and mounting hardware. Unpack each box and examine the exterior of each unit for any visible damage. If visible damage is detected, immediately contact your sales representative or YDI Customer Support.

2.9.3 Packing Lists and Orderable Parts

Each packing carton is accompanied by a packing list. Verify the contents of the carton against the packing list. Regardless of the packing list parts described here, the shipped packing list is binding. Note the warranty sticker on the Link CX-24. The Link CX-24 radio is sealed at the factory. Tampering with these seals voids the warranty.

See Table 2.3 for a high-level description of the orderable parts, and see Figure 2.3 for a picture of the orderable Link CX-24 parts.

YDI suggests that the user retain at least one (1) of each packing carton with all its packing materials. In the event that it is necessary to return a unit, the user will have the required packing material for safe shipment.

Table 2.3 – Link CX-24 Radio Orderable Parts

Item	Description	Remarks
1	Link CX-24 Radio, Integral Antenna	
2	Link CX-24 Mounting Bracket	
3A	Two each DS-3 Payload Data Cables (see Table A.1), One 10/100 Ethernet Control Cable (see Table A.2), and One DC Power Cable (see Table A.3)	All available in 82 ft (25 m), 164 ft (50 m), or 328 ft (100 m)
3B	Two each 10/100 Ethernet Payload and Control Cables (see Table A.2), and One Power Cable (see Table A.3)	All available in 82 ft (25 m), 164 ft (50 m), or 328 ft (100 m)
4	Link CX-24 to-Link CX-24 10/100 Ethernet Crossover Cable (see Table A.4)	20 ft (6 m)
5	Optional RS-232 CLI Craft PC 4-pin Circular-to-DB9 Cable (see Table A.6)	20 ft (6 m)
6A	Optional Transtector Lightning Arrestor Kit used at the cable entry to the Power, DS-3 and 10/100 Ethernet Equipment Structure	
6B	Optional Transtector Lightning Arrestor Kit used at the cable entry to the Power and 10/100 Ethernet Equipment Structure	
7	Power Supply, 110/220 VAC to 48 VDC	

Figure 2.3 – Link CX-24 Orderable Parts

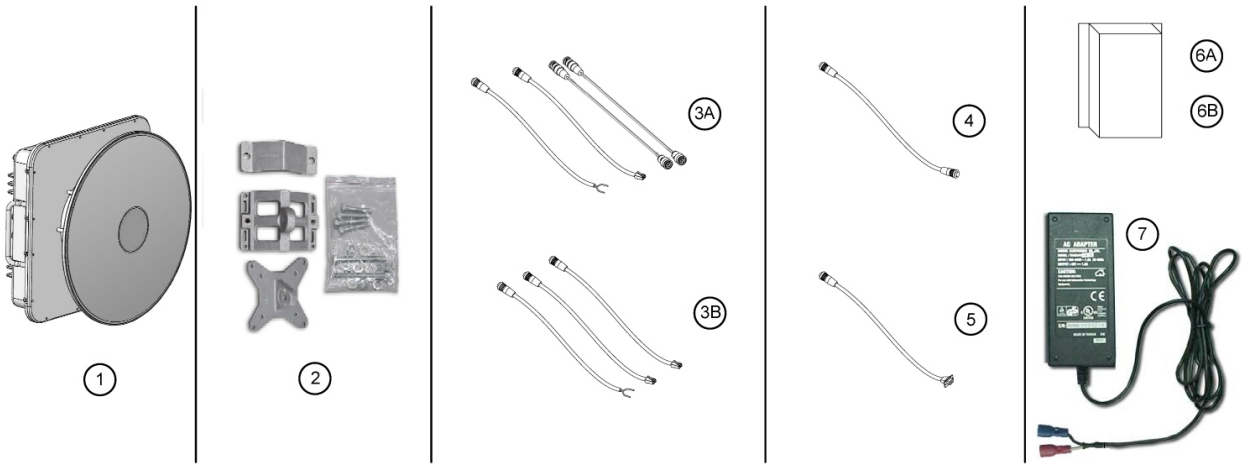

2.9.4 Installation Tools and Materials

Tools
The user should have at least the following tools on hand before installing the Link CX-24 radio:

Table 2.4 – Required Installation Tools

Tools	Purpose
8 mm and 13 mm torque wrench	Tighten the pole mount assembly to the pole and tighten the alignment lockdown bolts
Optical aid or compass (optional)	For coarse antenna azimuth alignment
Vertical level (optional)	For coarse antenna elevation alignment
Hand-held voltmeter, including cable with BNC adapter	Fine-tune the antenna alignment
Large Flat-Blade Screwdriver	Tighten the steel band clamps, when required

Materials
Refer to Section 2.9.3 and collect the following materials:

For DS-3 models:
- DS-3 coaxial cables to the Link CX-24.
- Ethernet data interface cable to the Link CX-24.

For Ethernet models:
- Ethernet data interface cables to the Link CX-24.

For all models:
- Power cable to the Link CX-24.
- Optional RS-232 cable to Craft PC command line interface. (Future option.)
- Standoffs and/or tie wraps (or similar) for fastening cables.
- Vinyl (or equivalent) electrical tape.
- Butyl rubber amalgamating connector sealing tape.
- Customer-supplied solid wire or tape (not braided) grounding wire.
- Lightning arrestors.

2.10 Initial Configuration

YDI strongly recommends that the installer configure the Link CX-24 at a depot or on-site before it is mounted in its final location. This section includes instructions on how to configure the Link CX-24 before it is installed.

2.10.1 Connecting a Craft PC to the Link CX-24

Note: For faster configuration, make sure you have a filled-out copy of the Radio Link Planning Worksheet from Section 2.8 before continuing with the rest of this section.

The equipment used to configure the Link CX-24 is a Craft PC with 10/100 Ethernet port and cable, equipped with any current web browser and Adobe Acrobat Reader software. Figure 2.4a shows how to connect the Craft PC and power to the Link CX-24 for initial configuration.

Perform the following steps:
1 If necessary, use the instructions provided with your Craft PC operating system to change the Craft PC Ethernet address to 10.0.0.1.

2 Turn off power to the Craft PC to prevent damage to the Ethernet port receive circuitry.

3 Using the factory-supplied Ethernet cable, connect an Ethernet-port equipped Craft PC to the Link CX-24 as shown in Figure 2.4a.

4 MAKE SURE the antenna is pointing away from your work area before you apply power to the Link CX-24.

5 Using the factory-supplied power cable, connect the power supply to the Link CX-24 as shown in Figure 2.4b for a positive-ground system, or Figure 2.4c for a negative-ground system. Notice that regardless of the polarity of the ground, the white wire of the power cable that goes to the Link CX-24 must be plugged to the black wire of the power supply cable, and the red wire of the power cable that goes to the Link CX-24 must be plugged to the white wire of the power supply cable. See also Table A.6 for cable and connector pinouts.

6 Turn on power to the Craft PC and verify that the Ethernet port is active. Note that the Link CX-24 Ethernet switch will auto-detect transmit and receive pairs, and you should detect an Ethernet connection within a few seconds of port activation.

The Link CX-24 is now powered on and transmitting RF, and the Craft PC is now ready to log onto the Link CX-24 internal web main page.

Figure 2.4a – Link CX-24 Configuration Setup

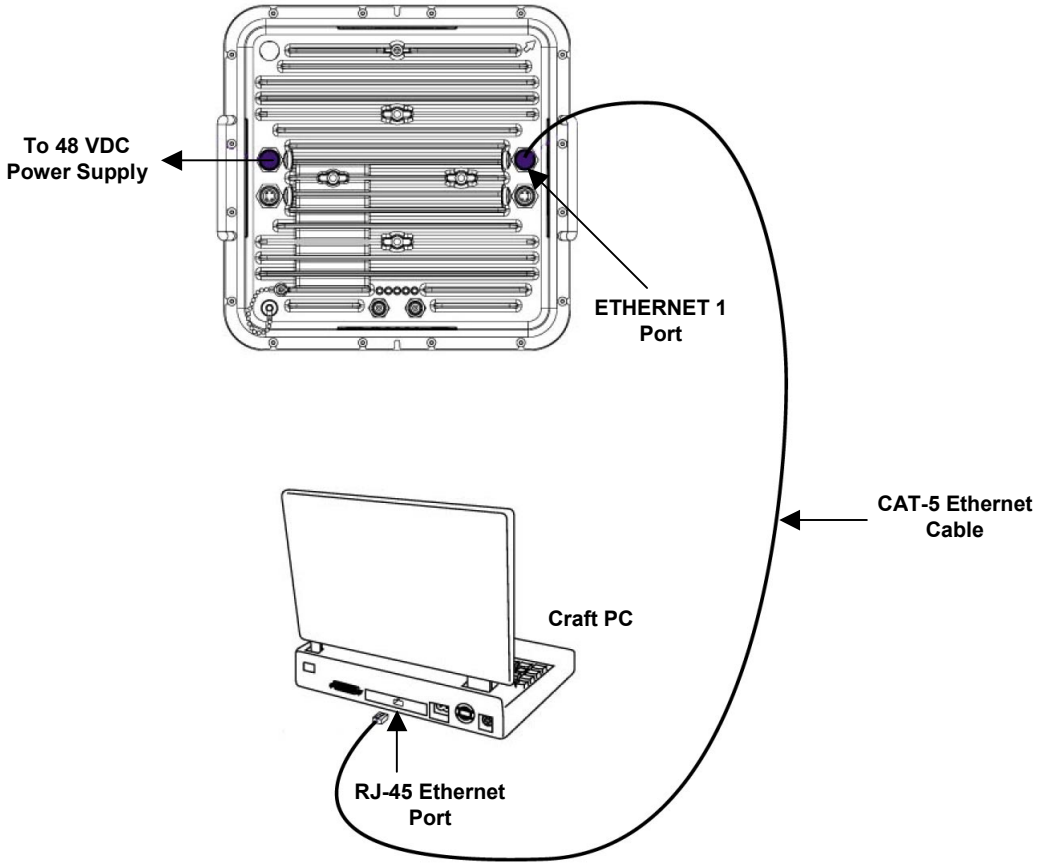

Figure 2.4b – Link CX-24 Positive-Ground Power Connections

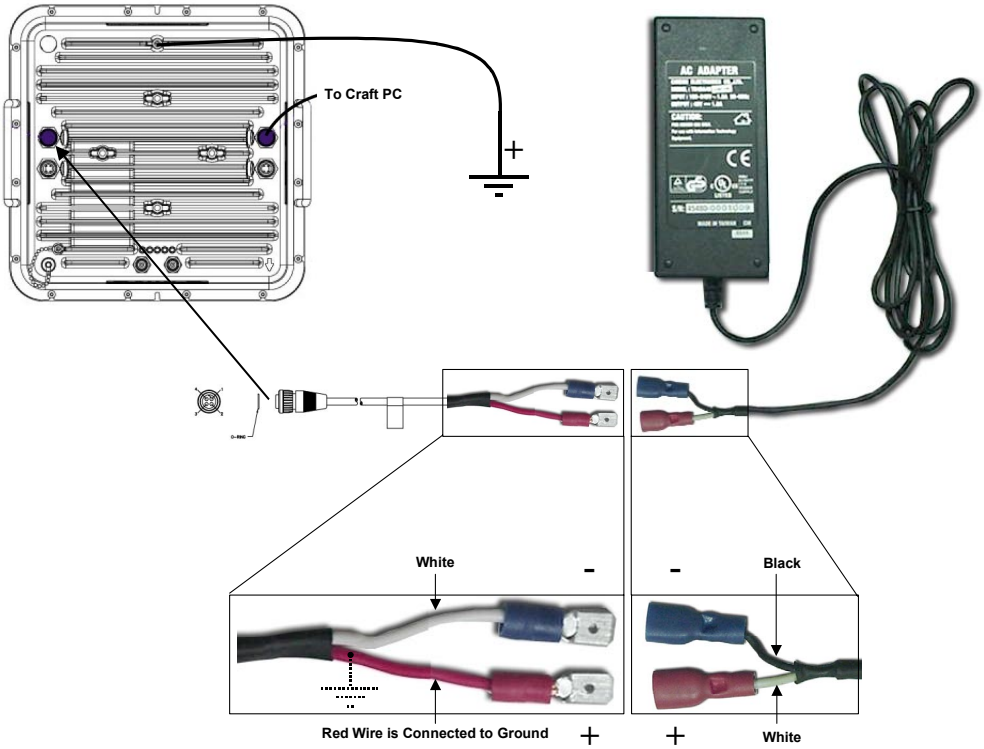

Figure 2.4c – Link CX-24 Negative-Ground Power Connections

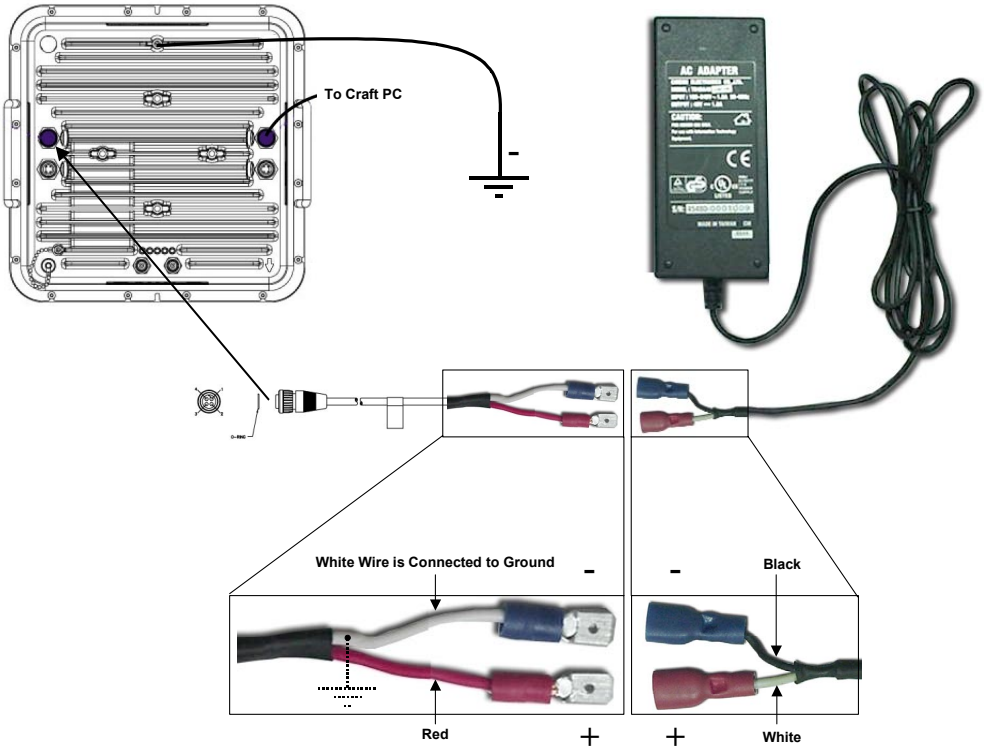

2.10.2 Logging In to the Link CX-24 Built-In Web Server

After you have connected and powered up the Link CX-24 and the Craft PC as described in Section 2.10.1, use the web browser on the Craft PC to log into the Link CX-24 built-in web server as follows:

7 Launch the web browser per the manufacturer's instructions.

8 Open the web page at Ethernet address http://10.0.0.2/ (transmit low models) or http://10.0.0.3/ (transmit high models) in the web browser. If the web browser Ethernet address has been changed, use the replacement Ethernet address instead of http://10.0.0.x/.

9 If the Link CX-24 has not been configured for a login and password, continue with Step 11. If the Link CX-24 has already been configured for a login and password, enter both and continue with Step 11.

10 The web browser displays the Monitor Page, similar to the samples shown in Figure 2.5 or Figure 2.6. Note that the values shown for each of the parameters will vary, depending on the state of the Link CX-24.

Figure 2.5 shows a typical DS-3 Link CX-24 Monitor page, while Figure 2.6 shows a typical Ethernet Link CX-24 Monitor page.

Figure 2.5 – Typical DS-3 Link CX-24 Monitor Web Page

Monitor
Test
Update Software
Commission Radio
Commission Manager

RSSI		-56 dBm	
BER		< 10^{-8}	
Tx Power		-5 dBm	
		Radio Link Status	
RSSI		Normal	
Receiver Overload		Normal	
BER		Normal	
Demodulator Lock		Normal	
		Hardware Status	
Tx Power		Normal	
Tx Synthesizer Lock		Normal	
Rx Synthesizer Lock		Normal	
		DS-3 Input Status	
DS-3 Input		**Alarm**	
Test Mode		Normal	
Radio Channel		2: Tx 24088 MHz, Rx 24228 MHz	
Tx Attenuation		Disable	
Maximum Tx Power		-5 dBm	
Automatic Tx Power Control		Disable	
Remote Radio IP Address		10.0.0.3	
RSSI Alarm Level		-80 dBm	
Alarm on Loss of DS-3 Input		Enable	
IP Address		10.0.0.2	
Subnet Mask		255.0.0.0	
Default Gateway		10.0.0.1	
	Model	**Revision**	**Serial Number**
Unit	100748-202	4	DC000306
PCB	100471-500	5	058F7F
Software		CXDS300_24.0E13	

Figure 2.6 – Typical Ethernet Link CX-24 Monitor Web Page

Monitor
Test
Update Software
Commission Radio
Commission Manager

RSSI		-56 dBm	
BER		< 10^{-8}	
Tx Power		-5 dBm	
		Radio Link Status	
RSSI		Normal	
Receiver Overload		Normal	
BER		Normal	
Demodulator Lock		Normal	
		Hardware Status	
Tx Power		Normal	
Tx Synthesizer Lock		Normal	
Rx Synthesizer Lock		Normal	
		Ethernet Input Status	
Ethernet Input		Normal	
Test Mode		Normal	
Radio Channel		2: Tx 24088 MHz, Rx 24228 MHz	
Tx Attenuation		Disable	
Maximum Tx Power		-5 dBm	
Automatic Tx Power Control		Disable	
Remote Radio IP Address		10.0.0.3	
RSSI Alarm Level		-80 dBm	
Alarm on Loss of Ethernet Input		Enable	
IP Address		10.0.0.2	
Subnet Mask		255.0.0.0	
Default Gateway		10.0.0.1	
	Model	**Revision**	**Serial Number**
Unit	100748-202	4	DC000306
PCB	100471-500	5	058F7F
Software		CX4500_24.0E13	

11 On the Monitor page, select the link for the Commission Radio page. The web browser displays the Commission Radio page, similar to the samples shown in Figure 2.7 and Figure 2.8.

Figure 2.7 shows a typical DS-3 Link CX-24 Commission Radio page, while Figure 2.8 shows a typical Ethernet Link CX-24 Commission Radio page.

Figure 2.7 – Typical DS-3 Link CX-24 Commission Radio Web Page

Monitor
Test
Update Software
Commission Radio
Commission Manager

Radio Channel	2: Tx 24088 MHz, Rx 24228 MHz
Tx Attenuation	Disable
Maximum Tx Power	-5 dBm
Automatic Tx Power Control	Disable
Remote Radio IP Address	10.0.0.3
RSSI Alarm Level	-80 dBm
Alarm on Loss of DS-3 Input	Enable

Submit Changes

Figure 2.8 – Typical Ethernet Link CX-24 Commission Radio Web Page

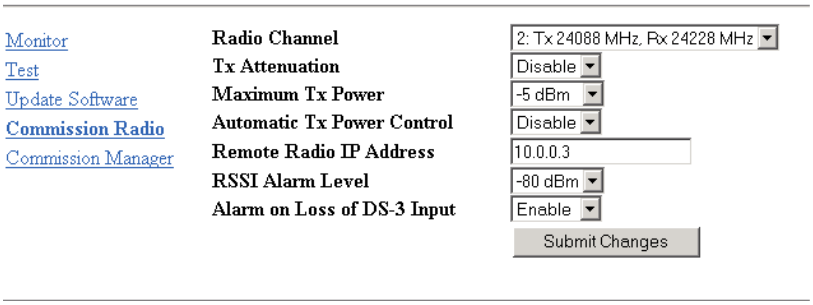

Note: The Link CX-24 is shipped with Tx Attenuation disabled. Make sure this setting remains unchanged until the rest of the Link CX-24 configuration steps are completed.

12 Using the data entered on the filled-out copy of the Radio Link Planning Worksheet from Chapter Three, select the planned configuration choices available on this page, except the final Tx Attenuation and the Automatic Tx Power Control values. Enable the Tx Attenuation and disable the Automatic Tx Power Control for now.

13 Click Submit Changes to upload changes to the Link CX-24.

14 On the Commission Radio page, select the link for the Commission Interfaces page. The web browser displays the Commission Manager Interfaces page, similar to the samples shown in Figure 2.9 and Figure 2.10.

Figure 2.9 shows a typical DS-3 Link CX-24 Commission Manager page, while Figure 2.10 shows a typical Ethernet Link CX-24 Commission Manager page.

15 Using the data entered on the filled-out copy of the Radio Link Planning Worksheet from Section 2.8, select the planned configuration choices available on this page.

16 Click Submit Changes to upload changes to the Link CX-24.

If you are commissioning a DS-3 Link CX-24, continue with Step 17. If you are commissioning an Ethernet Link CX-24, continue with Step 21.

Figure 2.9 – Typical DS-3 Link CX-24 Commission Manager Web Page

Monitor
Test
Update Software
Commission Radio
Commission Manager

IP Address	10.0.0.2
Subnet Mask	255.0.0.0
Default Gateway	10.0.0.1
Login Name	root
Login Password	**********
Repeat Password	**********
Allow login	◉ from any IP address ○ from IP addresses in this list
Trap Community	
send Traps to	
Read-Write Community	
allow Read-Write access	◉ from any IP address ○ from IP addresses in this list
Read-Only Community	public
allow Read-Only access	◉ from any IP address ○ from IP addresses in this list
System Name	Link CX 24GHz
System Contact	(System Administrator)
System Location	(System Location)

Submit Changes

Figure 2.10 – Typical Ethernet Link CX-24 Commission Manager Web Page

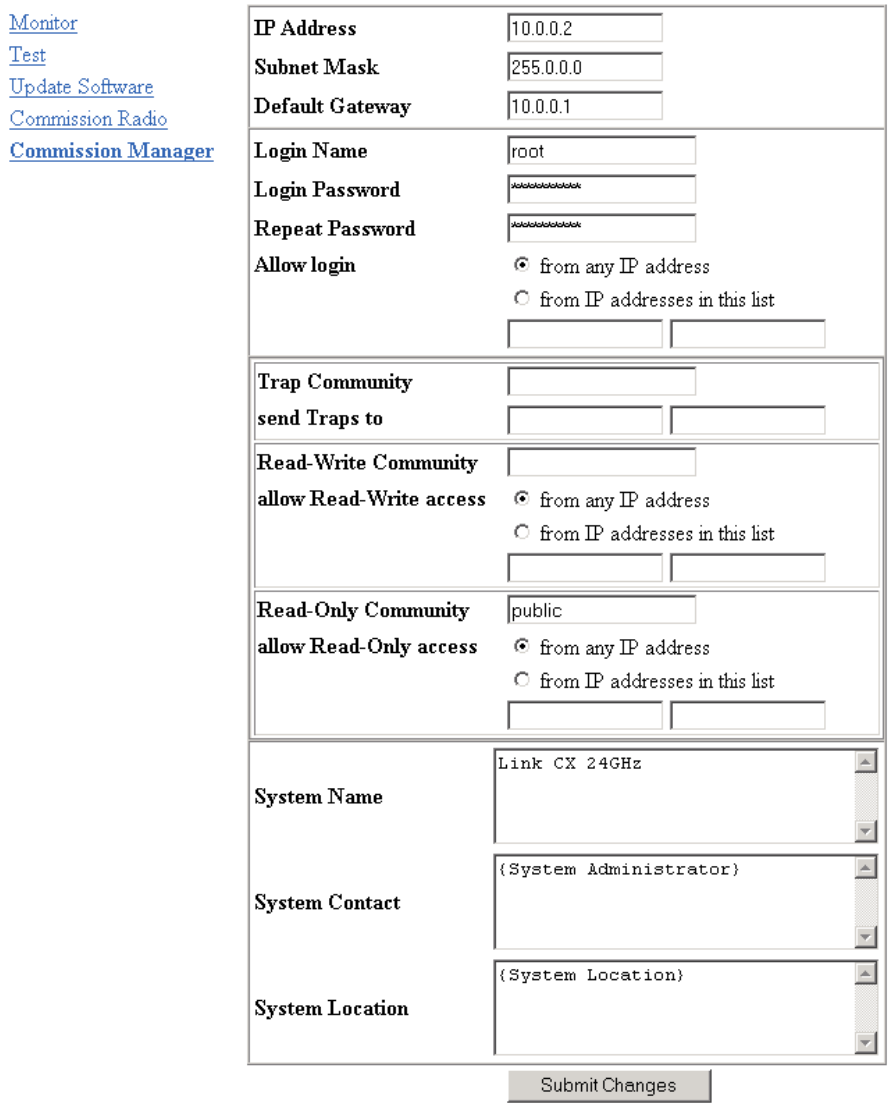

2.10.3 Testing a DS-3 Link CX-24

17 On the Commission Manager Interfaces page, select the link for the Test page. The web browser displays the Test page, similar to the sample shown in Figure 2.11.

18 On the Test page, select the BERT + Radio Loop-back test, and select One Minute. Select Start Test to verify the internal Link CX-24 circuitry before installation. When the BERT + Radio Loop-back test is complete, the Link CX-24 has been configured, and the internal signal generation, transmit, receive, and detecting circuitry of the Link CX-24 has been tested.

19 On the Test page, select the link for the Commission Radio page. The web browser again displays the Commission Radio page, similar to the sample shown in Figure 2.7.

20 Continue with Step 25.

Figure 2.11 – Typical Link CX-24 DS-3 Test Web Page

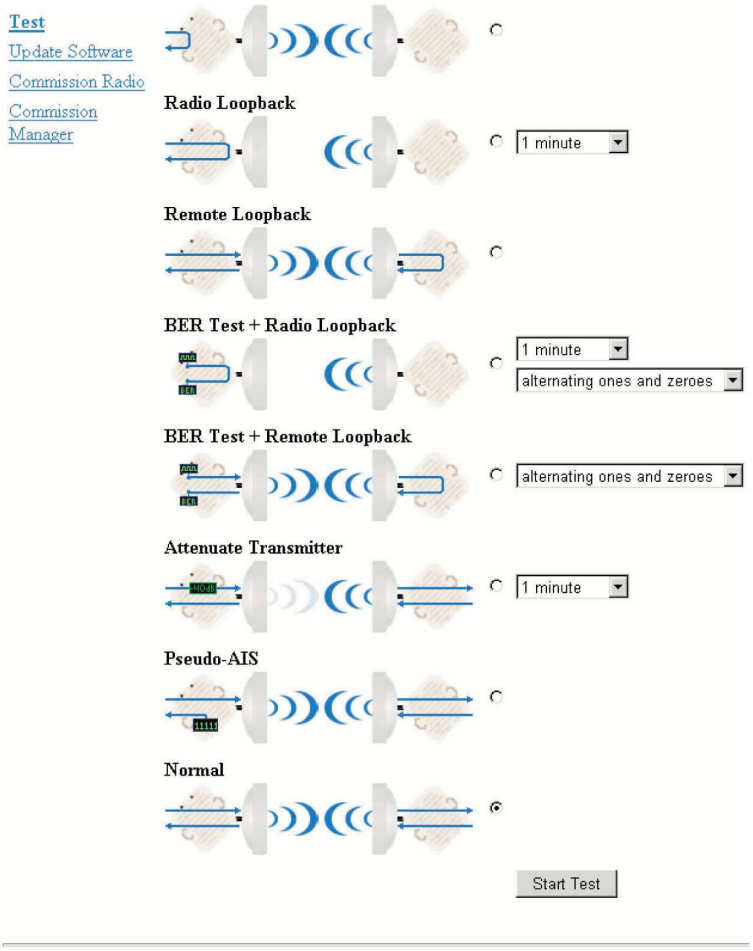

2.10.4 Testing an Ethernet Link CX-24

21 Connect an external Ethernet device to the ETHERNET 1 or 2 port on the Link CX-24.

22 Use the external Ethernet device to Ping the Link CX-24 at the local Ethernet address configured in Step 12. Verify that the Link CX-24 responds to the Ping. When the Ping test is complete, the Link CX-24 has been configured, and the internal Ethernet circuitry of the Link CX-24 has been tested.

23 Disconnect the external Ethernet device from the Link CX-24.

24 Continue with Step 25.

Note: Do not stand within 2 m (79 in.) of the front of the antenna for prolonged periods during Link CX-24 operation to avoid harmful RF radiation.

25 On the Commission Radio page, set the Tx Attenuation to disabled. This causes the Link CX-24 to transmit at the level set by the Maximum Transmit Power parameter.

26 Disconnect power from the Link CX-24 to prepare it for mounting in its final location.

27 Disconnect the Craft PC from the Link CX-24.

After completing this section, the Link CX-24 radio is configured and partially tested, and is ready to install as described in Section 2.11.

2.11 Mounting the Link CX-24

The Link CX-24 radio is a sealed unit that installs on a pole.

Notes: A pole is not supplied with the Link CX-24 and should be in place before attempting installation.

The body performing the installation is the responsible for preventing any contact or induction with mains lines at any voltage.

All connectors must be properly water-proofed with all-weather electrical tape such as Permagum, or equivalent. **Do not use Silicon glue**.

2.11.1 Installing the Link CX-24 Adapter Bracket

The Link CX-24 unit is installed by using an "X"-shaped adaptor bracket that is secured to the pole with a pole mounting bracket and a pole clamp. Figure 2.12 shows the components provided to mount the Link CX-24 unit.

Figure 2.12 – Link CX-24 Mounting Components

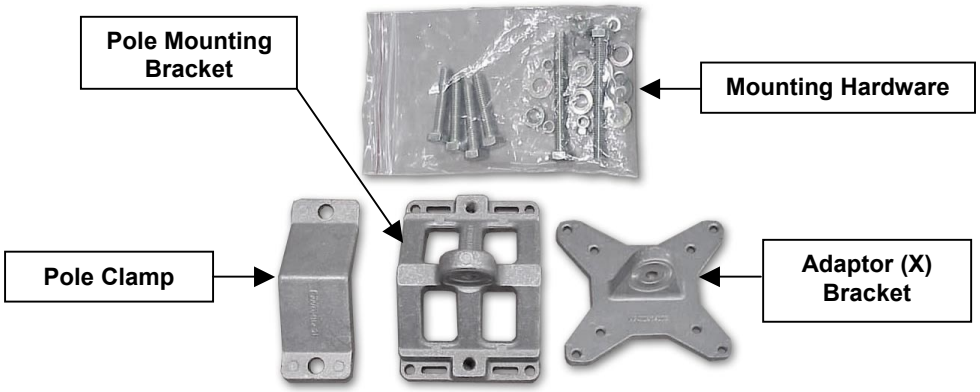

28 Select the Link CX-24 Polarization

Since the Link CX-24 is equipped with an integral antenna, how the adapter bracket (X) is mounted to the unit determines whether it is horizontally or vertically polarized. The Link CX-24 mounting brackets are designed to preserve the selected polarization until the ODU is removed from its adapter bracket (X).

The Link CX-24 ODU has a polarization label on the back. It is an arrow indicating the antenna polarization of the unit. See Figure 2.13. When attaching the adapter bracket (X) to the ODU for vertical polarization ensure that the brackets serrated edge lies in a vertical pointing in the same direction as the polarization arrow on the ODU. See Figure 2.14. For horizontal polarization the ODU should be rotated through 90 degrees while keeping the adapter bracket (X) orientation fixed.

Note: Both ends of the radio link must be identically polarized. The planned polarization is available from the filled-out copy of the Radio Link Planning Worksheet from Section 2.8.

Figure 2.13 – Setting the Link CX-24 Polarization – Vertical Polarization Shown

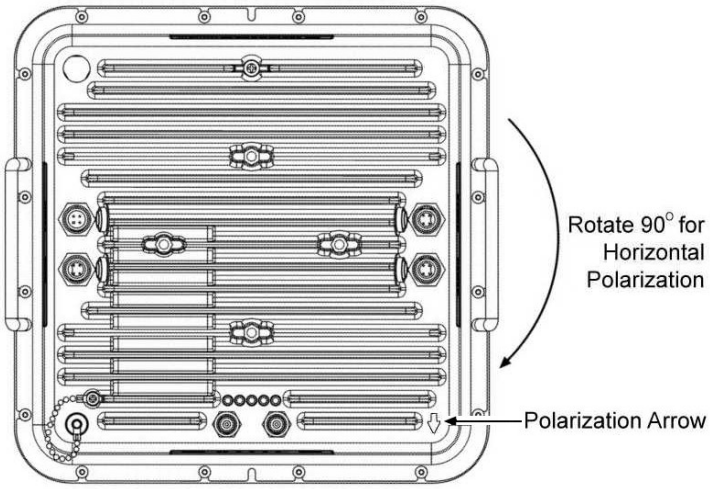

29 Install the pole-mount bracket as described below

a) Fit the adaptor bracket (X) to the back of the Link CX-24 unit noting polarization requirements as discussed above, by aligning the four mounting studs on the back of the unit with the adaptor bracket holes and securing to the unit using four M5 nuts, flat washers, and lock washers, as shown in Figure 2.14. Tighten hardware (four places). Torque to 5.7N-m (4.2 lb-ft). Note the position of the serrated edge of bracket (X).

b) Attach the pole-mounting bracket (A) to adaptor bracket (X) by using one M8 x 40L bolt, flat washers, lock washer, and nut, as shown in Fig 2.14. Do not tighten at this stage.

IMPORTANT: Ensure that the serrated edges on both brackets, (A) and (X), are facing each other.

Figure 2.14 – Detail Showing Assembly of Pole Mounting Bracket to Unit (Vertical Polarization)

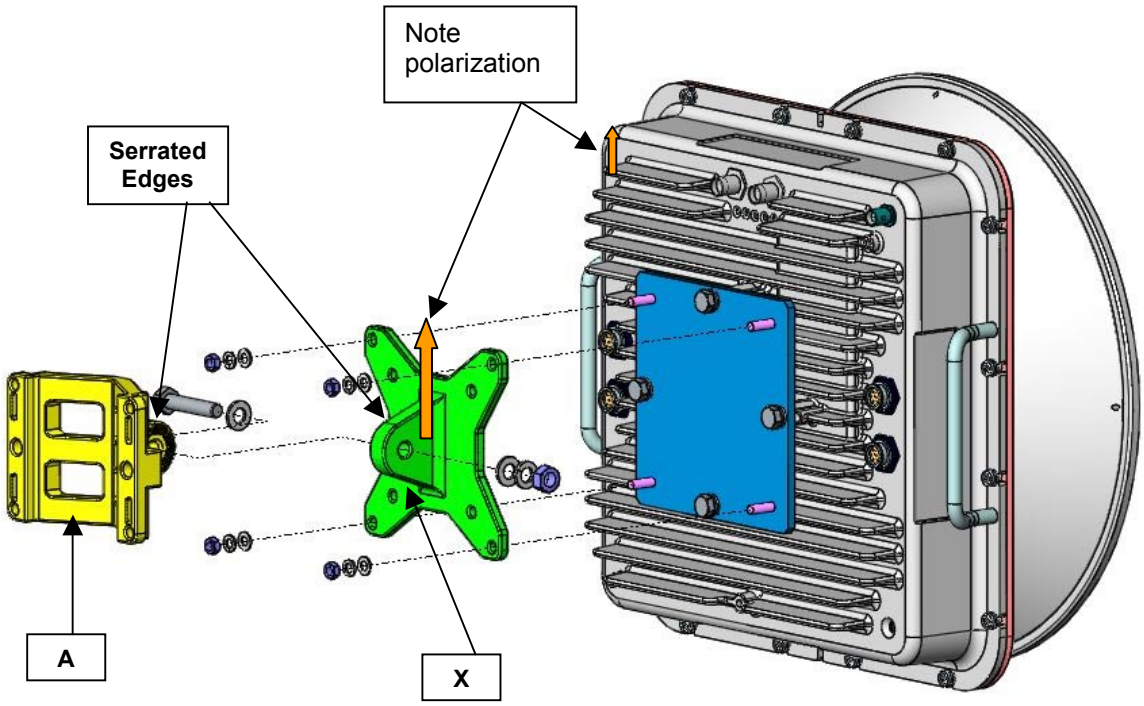

2.11.2 Attaching the Link CX-24 to the Pole

30 Attach the Link CX-24 to the pole as described below:

a) Fasten the Link CX-24 unit to the pole using pole clamp (B) and two M8 x 70 bolts, lock washer, and flat washer, as shown in Fig 2.15. It may be necessary to use two M8 x 40L bolts if you are fastening the Link CX-24 to a 1.75" diameter pole. Do not tighten at this stage. The pole-mounting bracket (A) will accept pole diameters between 1.75" to 3" OD. The Link CX-24 unit can be mounted to larger pole diameters by discarding pole clamp (B) and replacing it with metal straps (not included) fastened through slots located on the pole-mounting bracket (A).
b) Finger-tighten the two bolts on the clamp (B). The Link CX-24 mounting bracket assembly should be able to pivot around the pole and elevate up and down, allowing fine azimuth and elevation alignment. Use a compass or optical aid to coarsely align the assembly between the far-end antenna locations

Figure 2.15 – Attaching the Link CX-24 Unit to the Pole

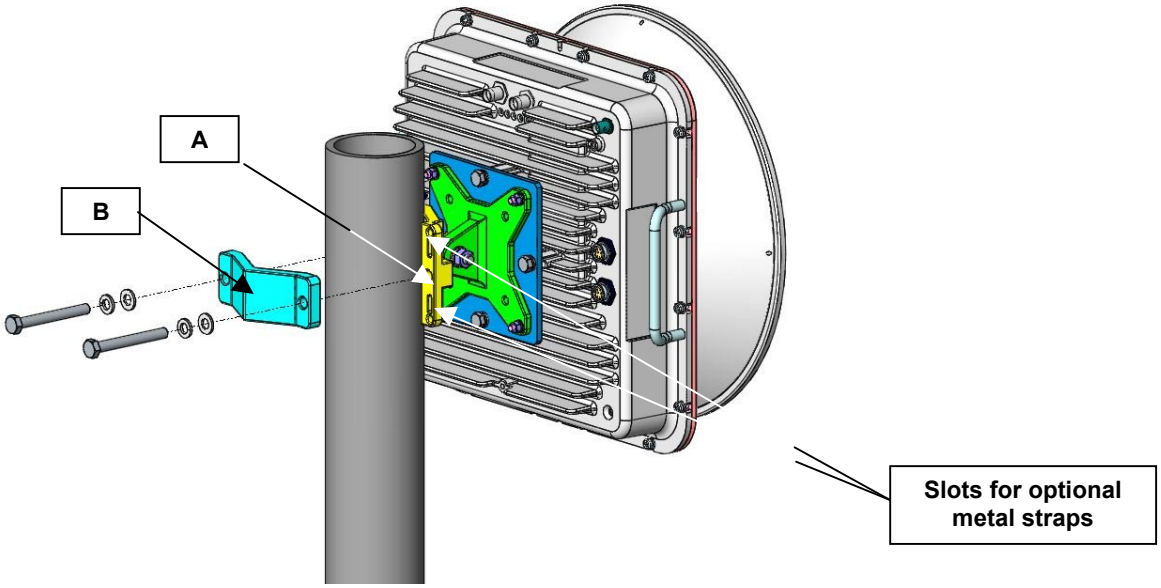

2.13 Completing the Link CX-24 Installation

The Link CX-24 is now mounted on the pole, and coarse-aligned with the far-end antenna. Continue with the following steps to complete the Link CX-24 installation.

2.13.1 Mounting the Lightning Arrestor

31 Install a lightning arrestor according to the manufacturer's instructions, and according to the guidelines in Appendix D to lessen the chance of damage from lightning strikes.

Note: YDI strongly recommends that you use a lightning arrestor, such as the Transtector Lightning Arrestor Kit, at the cable entry to the power, DS-3 and/or Ethernet equipment structure.

2.13.2 Routing the Data and Power Cables from the Lightning Arrestor

32 Route cables from the lightning arrestor through the cable entry to the power, DS-3 and/ or Ethernet equipment. Leave a minimum of 38 cm (15 inches) of service loop in the cables where they attach to the lightning arrestor. Avoid tight bends during cable routing and fastening.

33 Connect the power, DS-3 and/or Ethernet cables to the power, DS-3 and/or Ethernet equipment and the lightning arrestor.

34 Route power, DS-3 and/or Ethernet cables from the lightning arrestor to the Link CX-24. Using cable ties and/or standoffs, fasten these cables to the structure at 3 m (10 ft.) intervals. Leave a minimum of 38 cm (15 inches) of service loop in the cables where they attach to the Link CX-24 and the lightning arrestor. Avoid tight bends during cable routing and fastening.

The Link CX-24 has two Ethernet ports, and includes and internal Ethernet switch. However, typical Ethernet hubs and switches do not have spanning tree capability. MAKE SURE that you make only ONE Ethernet connection from a hub or switch to the Link CX-24 to prevent broadcast storms.

35 Connect the power, DS-3 and/or Ethernet cables to the lightning arrestor. When you apply power to

the Link CX-24, it starts transmitting.

36 Connect the power, DS-3 and/or Ethernet cables to the Link CX-24. See Figure 1.3 and Table 1.2 for the locations and descriptions of the Link CX-24 connectors.

37 Check the LEDs for proper operation. See Figure 1.3 and Table 4.2 for the locations and descriptions of the Link CX-24 LEDs:
- When power is properly applied to the Link CX-24, the PWR/LCL ALARM LED will be on.
- Because the radio link has not yet been established, the RF LINK LED should be off.
- When the DS-3 equipment is or is not transmitting data to the Link CX-24, the DATA LED should be on or off, respectively.
- When the Ethernet equipment is transmitting data to the Link CX-24, the ENET 1 and/or ENET 2 LEDs should be on or flashing. When the Ethernet equipment is not transmitting data to the Link CX-24, the ENET 1 and/or ENET 2 LEDs should be off or flashing as local data is received.

If any of these conditions is not true, troubleshoot the associated equipment and cables.

2.13.3 Grounding the Link CX-24

The Link CX-24 has a grounding lug. Make sure it is connected to a good earth ground using the guidelines in Appendix D.

38 Following the guidelines in Appendix D, connect a customer-supplied solid wire or tape (not braided) grounding wire to the grounding lug on the back of the Link CX-24. See Figure 2.16 for the grounding lug location. Connect the other end of this cable to a proper grounding point.

Figure 2.16 – Connecting an Earth Ground to the Link CX-24

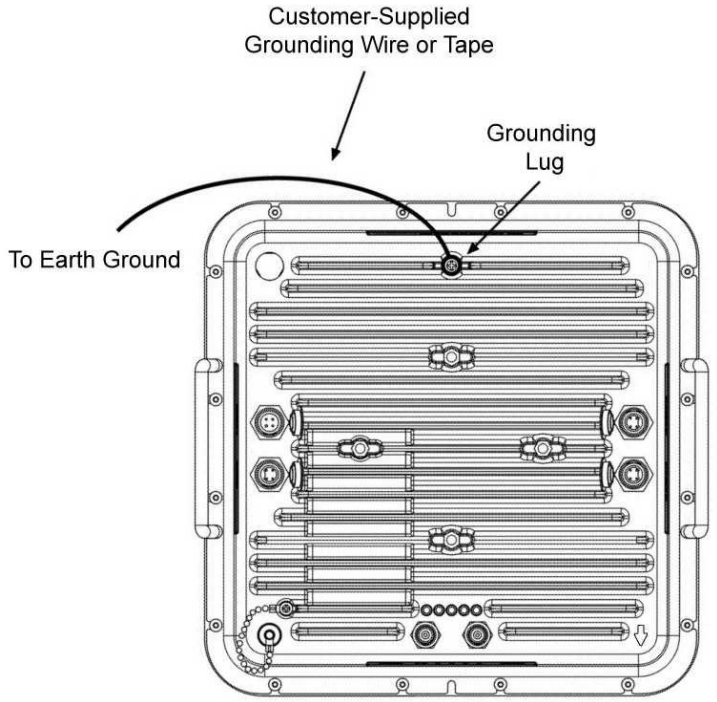

2.13.4 Sealing the Data and Power Cable Connectors

The cables that are terminated outdoors must be sealed at each exposed end to prevent moisture

incursion and damage. For all exposed connectors, including those between an external antenna and the Link CX-24, perform the following:

39 Wrap each connector with vinyl or plastic electrical tape.

40 Wrap the vinyl or plastic electrical tape with butyl rubber amalgamating tape to prevent moisture from permeating the connector.

41 Wrap the butyl rubber amalgamating tape with vinyl or plastic electrical tape.

Continue with Section 2.14 to fine tune the antenna's azimuth and elevation.

2.14 Aligning the Antenna

This section includes steps used to fine-tune the antenna alignment using RSSI as measured using a voltmeter. This part of the installation procedure is most easily accomplished with installers at each end of the radio link who are in communication with one another.

Notes: i) Failure to follow this antenna alignment procedure may damage your equipment and may render the radio unusable. Read through the entire procedure before attempting adjustment. Contact YDI with any questions.

ii) When you apply power to the Link CX-24, it starts transmitting. Do not stand within 2 m (79 in.) of the front of the antenna during Link CX-24 operation to avoid harmful RF radiation.

2.14.1 Adjustable Azimuth/Elevation Mount

Perform Steps 42 through 49 on the local radio. Then, repeat these steps for the remote radio. See Figure 2.17.

42 Remove the cap from the BNC connector of the remote radio. Attach the hand-held voltmeter and BNC test lead to the test point.

43 Fine Azimuth Alignment -- Rotate the Link CX-24 mounting bracket on the pole until the proper azimuth alignment is achieved. It is advised that, in order to ensure the true maximum, you should adjust through the maximum RSSI reading until the reading clearly drops and continues to drop to lower level side-lobes. Adjust back until the maximum is again attained. Expected voltage is more than +1 VDC. The adjustment should be slowly tuned through the peak, and reset at the absolute maximum before tightening.

44 Fine Elevation Alignment -- Rotate the Link CX-24 mounting bracket until the proper elevation alignment is achieved. It is advised that, in order to ensure the true maximum, you should adjust through the maximum RSSI reading until the reading clearly drops and continues to drop to lower level side-lobes. Adjust back until the maximum is again attained. Expected voltage is more than +1 VDC. The adjustment should be slowly tuned through the peak, and reset at the absolute maximum before tightening the bolts.

45 Tighten the two Azimuth adjustment bolts while observing the RSSI reading to ensure the azimuth alignment does not change while tightening. Torque the two M8 galvanized hex bolts to 24 N-m (17.7 lb-ft).

46 Tighten the Elevation adjustment bolt while observing the RSSI reading to ensure the elevation alignment does not change while tightening. Torque the M8 galvanized hex bolt to 24 N-m (17.7 lb-ft).

CAUTION: It is possible to obtain a false peak RSSI reading from the signal of a side-lobe. Up to three different side-lobes on either side of the main lobe may give false peak alignment readings.

For this reason, it is important that a wide sweep in both azimuth and elevation is made in order to identify these false peak RSSI readings so to zero in on the true peak alignment reading due to the main antenna beam.

Figure 2.17 – Final Line-of-Sight Adjustment and Signal Optimization

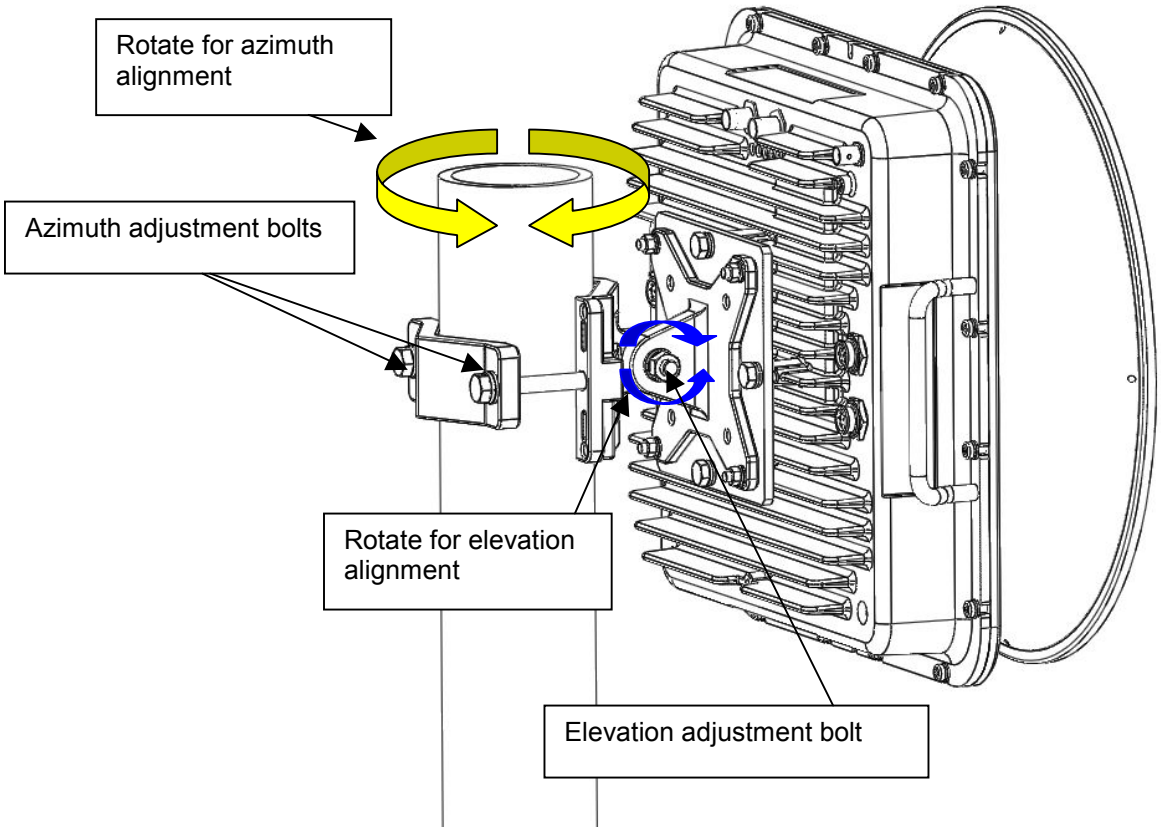

Note: Alignment for each antenna should be alternated at least twice before confirming the final setting.

47 Disconnect the hand-held voltmeter and BNC test lead from the RSSI port.

48 Rotate the RSSI port cap about 90 degrees to seal the Link CX-24 case.

49 Recheck the Link CX-24 LEDs. See Figure 1.3 and Table 4.2 for the locations and descriptions of the Link CX-24 LEDs.
- When power is properly applied to the Link CX-24, the PWR/LCL ALARM LED will be on.
- Because the radio link has been established, the RF LINK LED should be on.
- When the DS-3 equipment is or is not transmitting data to the Link CX-24, the DATA LED should be on or off, respectively.
- When the Ethernet equipment is transmitting data to the Link CX-24, the ENET 1 and/or ENET 2 LEDs should be on or flashing. When the Ethernet equipment is not transmitting data to the Link CX-24, the ENET 1 and/or ENET 2 LEDs should be off.

If any of these conditions is not true, troubleshoot the associated equipment and cables.

The Link CX-24 is now mounted and aligned. Continue with Section 2.15 for acceptance tests.

2.15 Acceptance Testing

This section describes the tests used to verify that the Link CX-24 data input circuitry, near-end Link CX-24 radio, radio link, and far-end Link CX-24 radio are installed properly and operating correctly.

50 Verify that the physical installation is correct. Use Table 2.5 to sign off the individual checks.

Table 2.5 – Physical Installation Checklist

Checklist Item	Verified	Inspector	Date
Is the mounting pipe securely connected to the mounting structure?			
Is the Link CX-24 securely connected to the mounting pipe?			
Is the lightning protection above the Link CX-24 properly grounded?			
Is the Link CX-24 properly grounded?			
Is the lightning arrestor at the entry to the equipment enclosure properly grounded?			
Is all cabling to the Link CX-24 properly routed (no sharp bends and properly attached)?			
Are all exposed connectors properly sealed against moisture?			
Are all unused connectors capped off or otherwise sealed against moisture?			
Is the antenna polarization correct (as indicated on the back of the unit)?			

51 Verify that the electrical connections are correct. Use Table 2.6 to sign off the individual checks.