Appendix A. SAR Plots of System Verification

The plots for system verification with largest deviation for each SAR system combination are shown as follows.

Test Laboratory: Bureau Veritas ADT SAR/HAC Testing Lab Date: 2014/01/03

System Check_H750_140103

DUT: Dipole 750 MHz; Type: D750V3; SN: 1013

Communication System: CW; Frequency: 750 MHz;Duty Cycle: 1:1
Medium: H750_0103 Medium parameters used: f = 750 MHz; σ = 0.906 S/m; ε_r = 41.293; ρ = 1000 kg/m^3
Ambient Temperature：21.6 ℃； Liquid Temperature：20.8 ℃

DASY5 Configuration:
- Probe: EX3DV4 - SN3864; ConvF(10.41, 10.41, 10.41); Calibrated: 2013/07/31;
- Sensor-Surface: 2mm (Mechanical Surface Detection)
- Electronics: DAE4 Sn1277; Calibrated: 2013/07/26
- Phantom: SAM Phantom_Front; Type: SAM V4.0; Serial: TP 1485
- Measurement SW: DASY52, Version 52.8 (4); SEMCAD X Version 14.6.8 (7028)

Pin=250mW/Area Scan (61x81x1): Interpolated grid: dx=1.500 mm, dy=1.500 mm
Maximum value of SAR (interpolated) = 2.86 W/kg

Pin=250mW/Zoom Scan (5x5x7)/Cube 0: Measurement grid: dx=8mm, dy=8mm, dz=5mm
Reference Value = 57.025 V/m; Power Drift = -0.01 dB
Peak SAR (extrapolated) = 3.36 W/kg
SAR(1 g) = 2.26 W/kg; SAR(10 g) = 1.5 W/kg
Maximum value of SAR (measured) = 2.86 W/kg

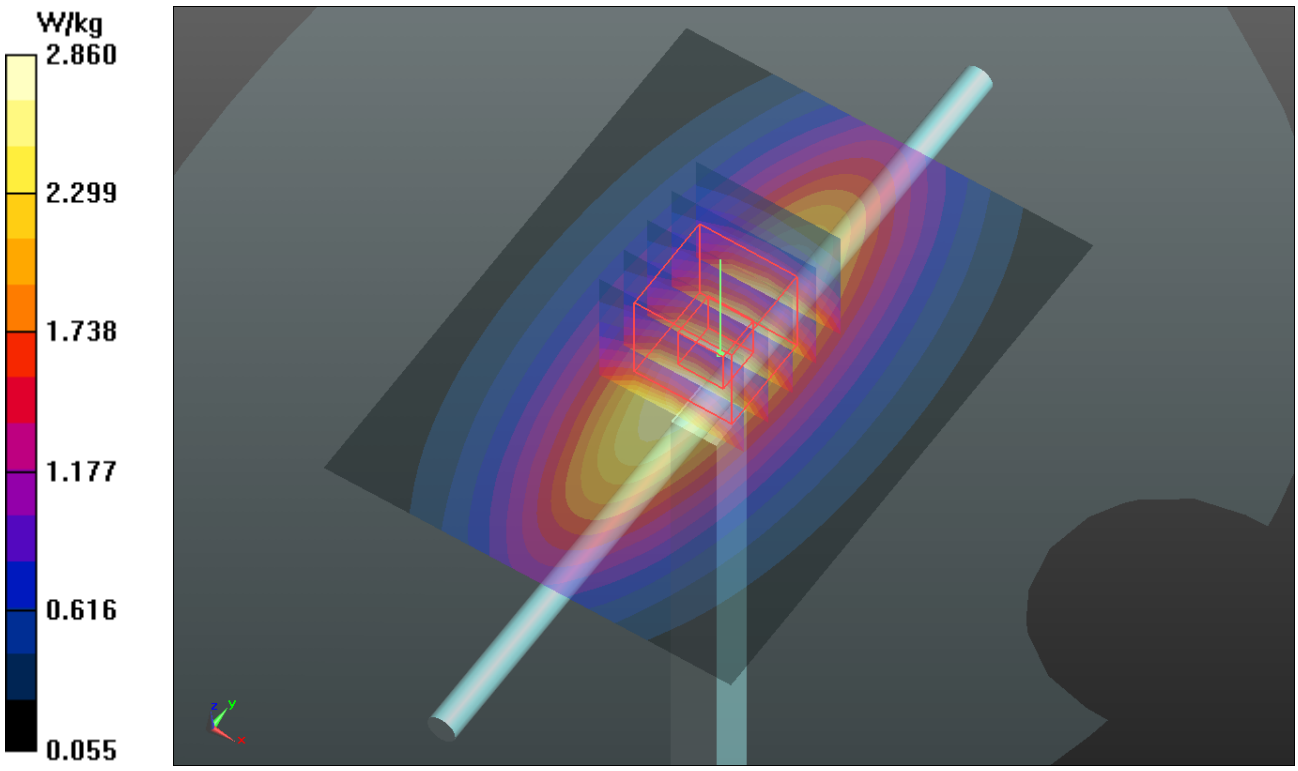

Test Laboratory: Bureau Veritas ADT SAR/HAC Testing Lab Date: 2014/01/03

System Check_H835_140103

DUT: Dipole 835 MHz; Type: D835V2; SN: 4d121

Communication System: CW; Frequency: 835 MHz;Duty Cycle: 1:1
Medium: H835_0103 Medium parameters used: f = 835 MHz; σ = 0.889 S/m; ε_r = 42.896; ρ = 1000 kg/m^3
Ambient Temperature：21.6 ℃； Liquid Temperature：20.8 ℃

DASY5 Configuration:
- Probe: EX3DV4 - SN3864; ConvF(9.96, 9.96, 9.96); Calibrated: 2013/07/31;
- Sensor-Surface: 2mm (Mechanical Surface Detection)
- Electronics: DAE4 Sn1277; Calibrated: 2013/07/26
- Phantom: SAM Phantom_Front; Type: SAM V4.0; Serial: TP 1485
- Measurement SW: DASY52, Version 52.8 (4); SEMCAD X Version 14.6.8 (7028)

Pin=250mW/Area Scan (61x81x1): Interpolated grid: dx=1.500 mm, dy=1.500 mm
Maximum value of SAR (interpolated) = 2.96 W/kg

Pin=250mW/Zoom Scan (5x5x7)/Cube 0: Measurement grid: dx=8mm, dy=8mm, dz=5mm
Reference Value = 58.657 V/m; Power Drift = 0.06 dB
Peak SAR (extrapolated) = 3.58 W/kg
SAR(1 g) = 2.38 W/kg; SAR(10 g) = 1.56 W/kg
Maximum value of SAR (measured) = 3.03 W/kg

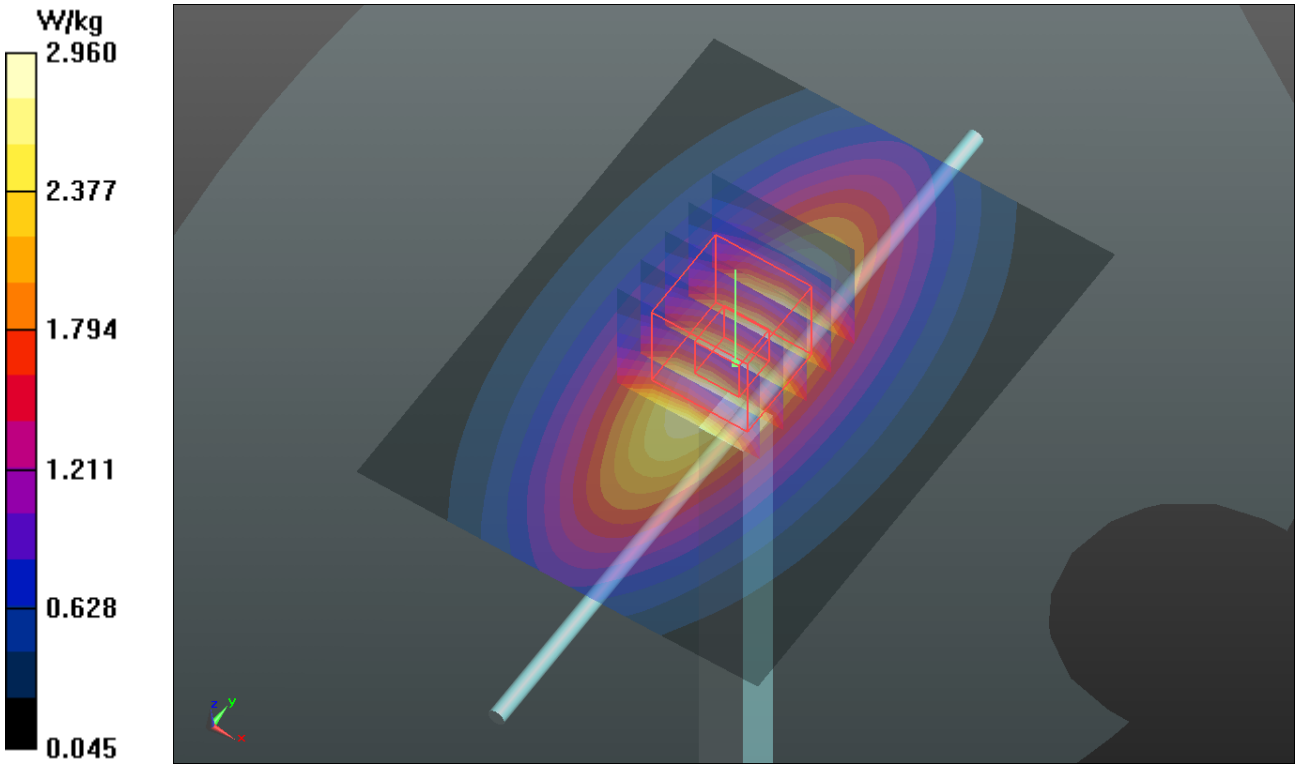

System Check_H1750_140103

DUT: Dipole 1750 MHz; Type: D1750V2; SN: 1055

Communication System: CW; Frequency: 1750 MHz;Duty Cycle: 1:1
Medium: H1750_0103 Medium parameters used: f = 1750 MHz; σ = 1.356 S/m; ε_r = 40.578; ρ = 1000 kg/m^3
Ambient Temperature：21.8 ℃； Liquid Temperature：20.9 ℃

DASY5 Configuration:
- Probe: EX3DV4 - SN3864; ConvF(8.49, 8.49, 8.49); Calibrated: 2013/07/31;
- Sensor-Surface: 2mm (Mechanical Surface Detection)
- Electronics: DAE4 Sn1277; Calibrated: 2013/07/26
- Phantom: SAM Phantom_Left; Type: SAM V4.0; Serial: TP 1652
- Measurement SW: DASY52, Version 52.8 (4); SEMCAD X Version 14.6.8 (7028)

Pin=250mW/Area Scan (61x61x1): Interpolated grid: dx=1.500 mm, dy=1.500 mm
Maximum value of SAR (interpolated) = 13.0 W/kg

Pin=250mW/Zoom Scan (5x5x7)/Cube 0: Measurement grid: dx=8mm, dy=8mm, dz=5mm
Reference Value = 97.607 V/m; Power Drift = -0.03 dB
Peak SAR (extrapolated) = 15.6 W/kg
SAR(1 g) = 8.69 W/kg; SAR(10 g) = 4.62 W/kg
Maximum value of SAR (measured) = 12.3 W/kg

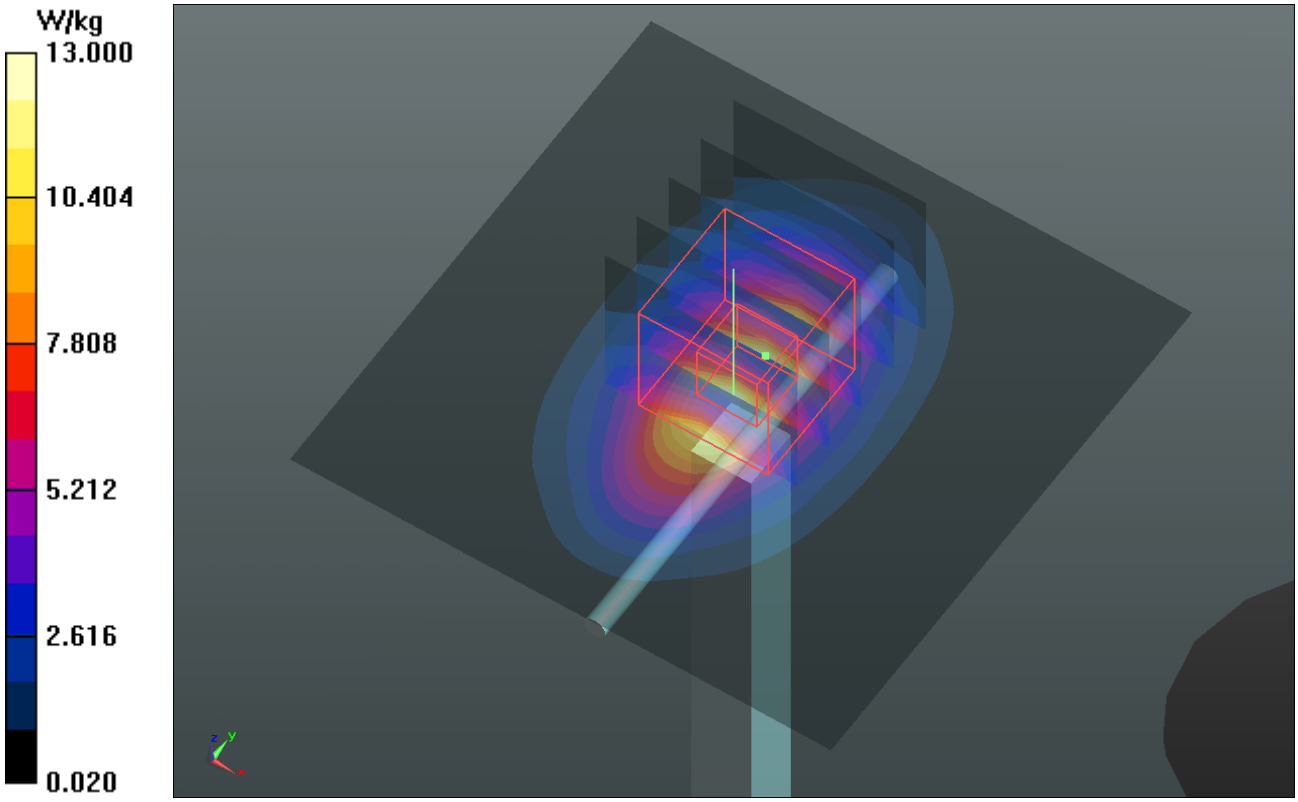

Test Laboratory: Bureau Veritas ADT SAR/HAC Testing Lab Date: 2014/01/02

System Check_H1900_140102

DUT: Dipole 1900 MHz; Type: D1900V2; SN: 5d036

Communication System: CW; Frequency: 1900 MHz;Duty Cycle: 1:1
Medium: H1900_0102 Medium parameters used: f = 1900 MHz; σ = 1.43 S/m; ε_r = 40.37; ρ = 1000 kg/m^3
Ambient Temperature：21.7 ℃； Liquid Temperature：20.7 ℃

DASY5 Configuration:
- Probe: EX3DV4 - SN3864; ConvF(8.2, 8.2, 8.2); Calibrated: 2013/07/31;
- Sensor-Surface: 2mm (Mechanical Surface Detection)
- Electronics: DAE4 Sn1277; Calibrated: 2013/07/26
- Phantom: SAM Phantom_Left; Type: SAM V4.0; Serial: TP 1652
- Measurement SW: DASY52, Version 52.8 (4); SEMCAD X Version 14.6.8 (7028)

Pin=250mW/Area Scan (61x61x1): Interpolated grid: dx=1.500 mm, dy=1.500 mm
Maximum value of SAR (interpolated) = 13.8 W/kg

Pin=250mW/Zoom Scan (5x5x7)/Cube 0: Measurement grid: dx=8mm, dy=8mm, dz=5mm
Reference Value = 99.757 V/m; Power Drift = 0.15 dB
Peak SAR (extrapolated) = 18.9 W/kg
SAR(1 g) = 9.77 W/kg; SAR(10 g) = 4.91 W/kg
Maximum value of SAR (measured) = 14.4 W/kg

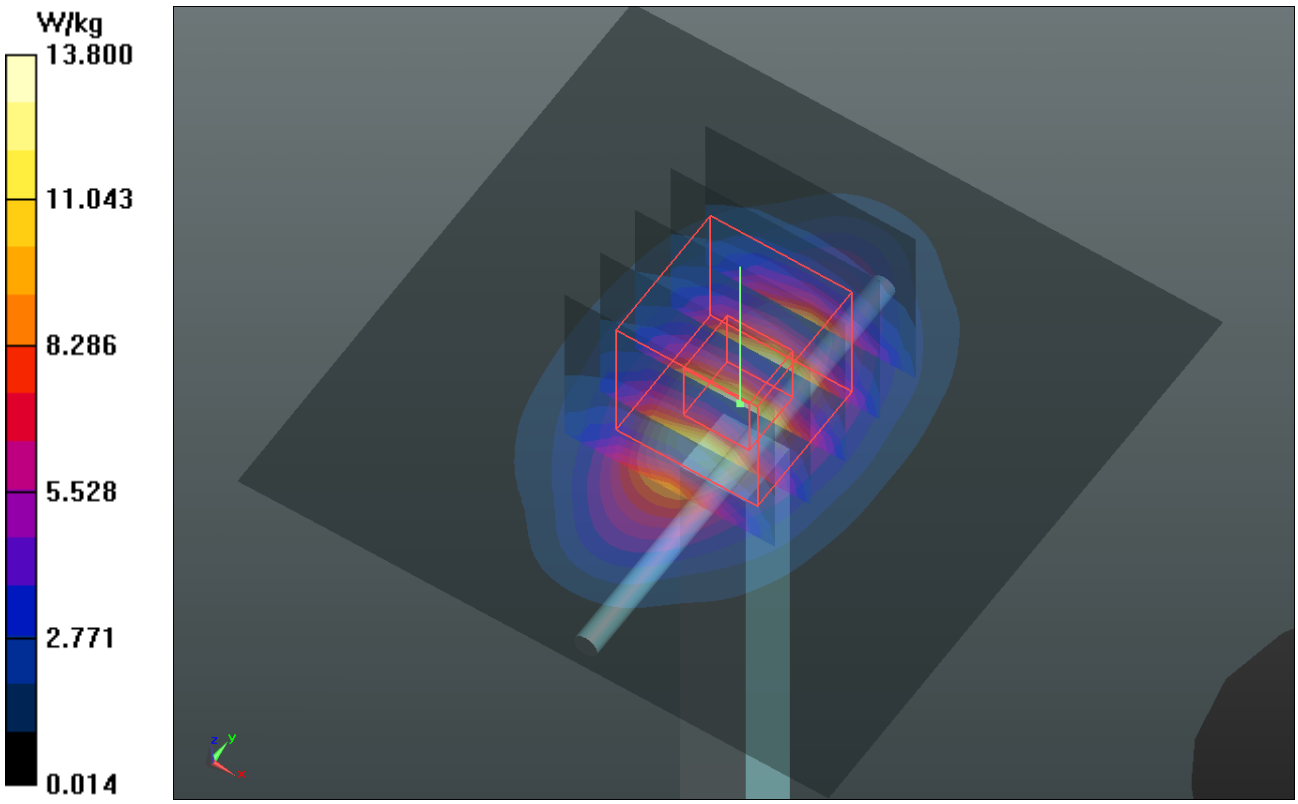

Test Laboratory: Bureau Veritas ADT SAR/HAC Testing Lab Date: 2014/01/04

System Check_H2450_140104

DUT: Dipole 2450 MHz; Type: D2450V2; SN: 737

Communication System: CW; Frequency: 2450 MHz;Duty Cycle: 1:1
Medium: H2450_0104 Medium parameters used: f = 2450 MHz; σ = 1.824 S/m; ε_r = 38.856; ρ = 1000 kg/m^3
Ambient Temperature：21.7 ℃； Liquid Temperature：21.1 ℃

DASY5 Configuration:
- Probe: EX3DV4 - SN3864; ConvF(7.47, 7.47, 7.47); Calibrated: 2013/07/31;
- Sensor-Surface: 2mm (Mechanical Surface Detection)
- Electronics: DAE4 Sn1277; Calibrated: 2013/07/26
- Phantom: SAM Phantom_Left; Type: SAM V4.0; Serial: TP 1652
- Measurement SW: DASY52, Version 52.8 (4); SEMCAD X Version 14.6.8 (7028)

Pin=250mW/Area Scan (81x81x1): Interpolated grid: dx=1.200 mm, dy=1.200 mm
Maximum value of SAR (interpolated) = 19.5 W/kg

Pin=250mW/Zoom Scan (7x7x7)/Cube 0: Measurement grid: dx=5mm, dy=5mm, dz=5mm
Reference Value = 105.0 V/m; Power Drift = -0.06 dB
Peak SAR (extrapolated) = 26.8 W/kg
SAR(1 g) = 12.5 W/kg; SAR(10 g) = 5.68 W/kg
Maximum value of SAR (measured) = 19.4 W/kg

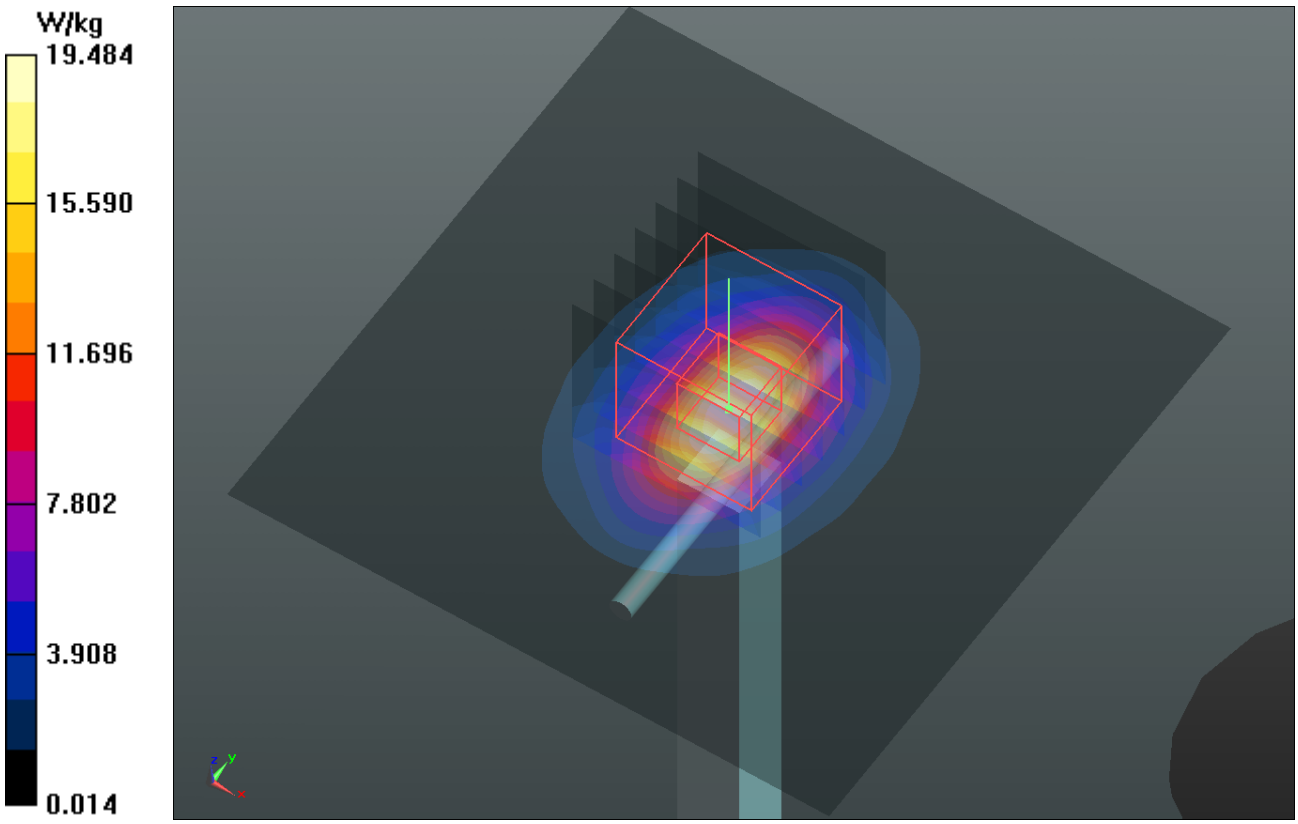

Test Laboratory: Bureau Veritas ADT SAR/HAC Testing Lab Date: 2014/01/09

System Check_H2600_140109

DUT: Dipole 2600 MHz; Type: D2600V2; SN: 1020

Communication System: CW; Frequency: 2600 MHz;Duty Cycle: 1:1
Medium: H2600_0109 Medium parameters used: f = 2600 MHz; σ = 2.049 S/m; ε_r = 37.739; ρ = 1000 kg/m^3
Ambient Temperature：21.9 ℃； Liquid Temperature：21.6 ℃

DASY5 Configuration:
- Probe: EX3DV4 - SN3864; ConvF(7.26, 7.26, 7.26); Calibrated: 2013/07/31;
- Sensor-Surface: 2mm (Mechanical Surface Detection)
- Electronics: DAE4 Sn1277; Calibrated: 2013/07/26
- Phantom: SAM Phantom_Front; Type: SAM V4.0; Serial: TP 1485
- Measurement SW: DASY52, Version 52.8 (4); SEMCAD X Version 14.6.8 (7028)

Pin=250mW/Area Scan (81x81x1): Interpolated grid: dx=1.200 mm, dy=1.200 mm
Maximum value of SAR (interpolated) = 21.3 W/kg

Pin=250mW/Zoom Scan (7x7x7)/Cube 0: Measurement grid: dx=5mm, dy=5mm, dz=5mm
Reference Value = 103.1 V/m; Power Drift = 0.02 dB
Peak SAR (extrapolated) = 29.1 W/kg
SAR(1 g) = 14.2 W/kg; SAR(10 g) = 6.77 W/kg
Maximum value of SAR (measured) = 21.4 W/kg

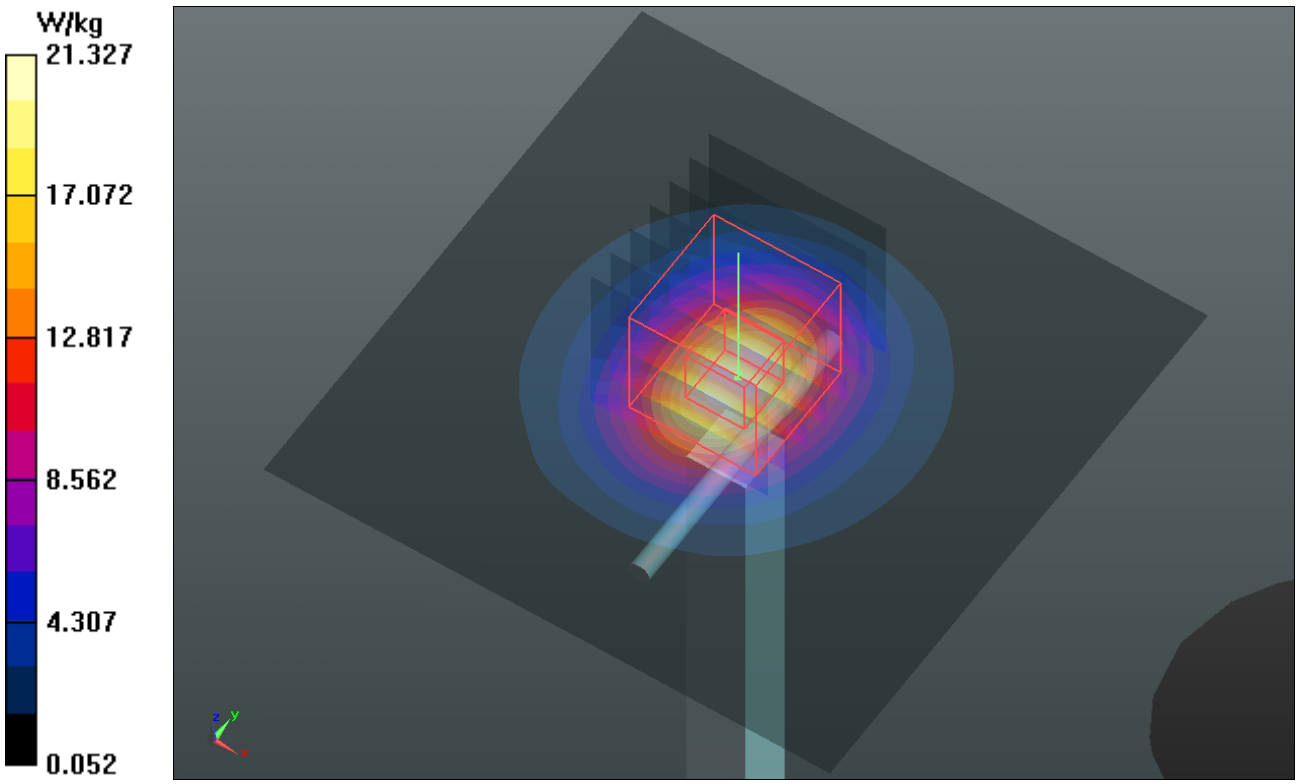

Test Laboratory: Bureau Veritas ADT SAR/HAC Testing Lab Date: 2014/01/05

System Check_H5200_140105

DUT: Dipole 5 GHz; Type: D5GHzV2; SN: 1018

Communication System: CW; Frequency: 5200 MHz;Duty Cycle: 1:1
Medium: H5G_0105 Medium parameters used: f = 5200 MHz; σ = 4.788 S/m; ε_r = 35.428; ρ = 1000 kg/m^3
Ambient Temperature：21.5 ℃； Liquid Temperature：21.1 ℃

DASY5 Configuration:
- Probe: EX3DV4 - SN3864; ConvF(5.33, 5.33, 5.33); Calibrated: 2013/07/31;
- Sensor-Surface: 2mm (Mechanical Surface Detection)
- Electronics: DAE4 Sn1277; Calibrated: 2013/07/26
- Phantom: SAM Phantom_Front; Type: SAM V4.0; Serial: TP 1485
- Measurement SW: DASY52, Version 52.8 (4); SEMCAD X Version 14.6.8 (7028)

Pin=100mW/Area Scan (91x91x1): Interpolated grid: dx=1.000 mm, dy=1.000 mm
Maximum value of SAR (interpolated) = 15.4 W/kg

Pin=100mW/Zoom Scan (7x7x12)/Cube 0: Measurement grid: dx=4mm, dy=4mm, dz=2mm
Reference Value = 57.582 V/m; Power Drift = 0.08 dB
Peak SAR (extrapolated) = 32.8 W/kg
SAR(1 g) = 7.42 W/kg; SAR(10 g) = 2.09 W/kg
Maximum value of SAR (measured) = 15.6 W/kg

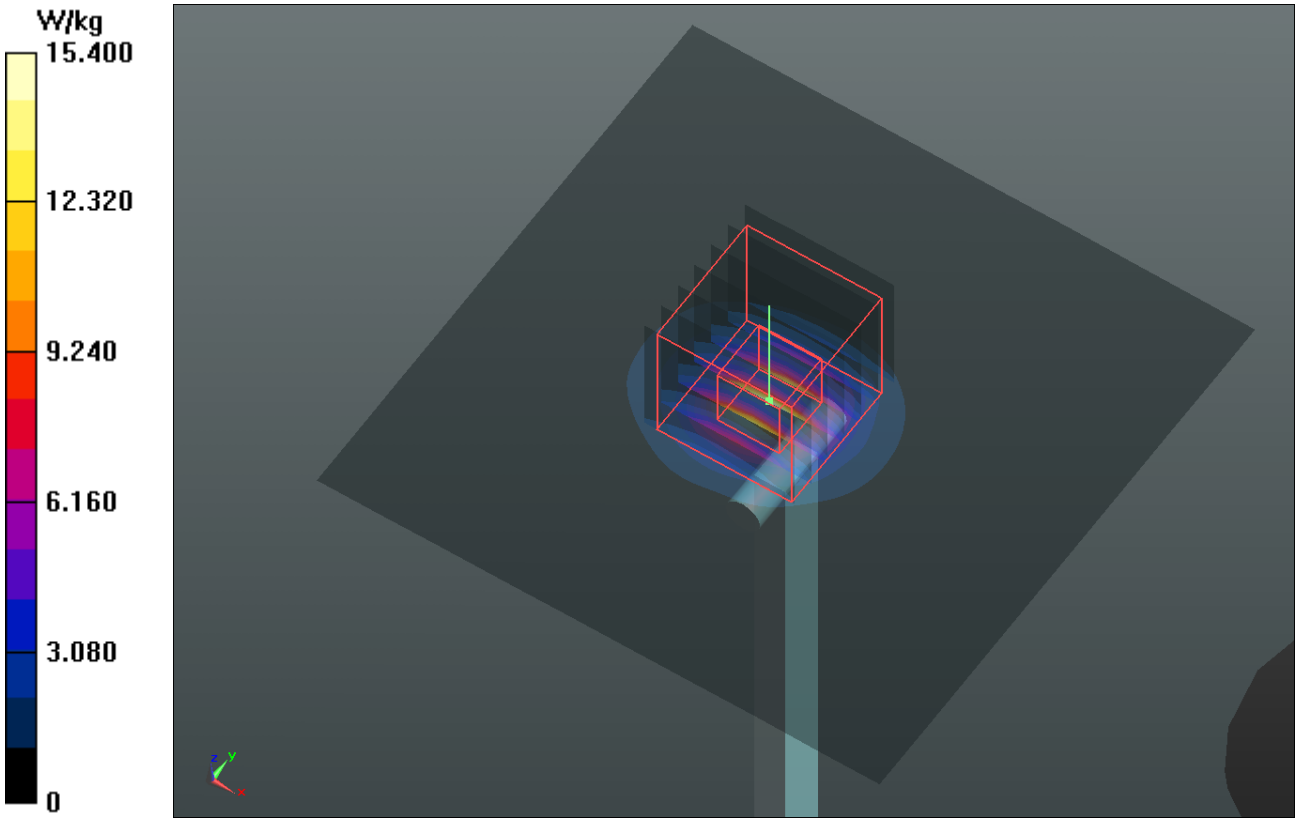

System Check_H5300_140106

DUT: Dipole 5 GHz; Type: D5GHzV2; SN: 1018

Communication System: CW; Frequency: 5300 MHz;Duty Cycle: 1:1
Medium: H5G_0106 Medium parameters used: f = 5300 MHz; σ = 4.97 S/m; ε_r = 35.931; ρ = 1000 kg/m^3
Ambient Temperature：21.2 ℃； Liquid Temperature：20.5 ℃

DASY5 Configuration:
- Probe: EX3DV4 - SN3864; ConvF(5.13, 5.13, 5.13); Calibrated: 2013/07/31;
- Sensor-Surface: 2mm (Mechanical Surface Detection)
- Electronics: DAE4 Sn1277; Calibrated: 2013/07/26
- Phantom: SAM Phantom_Left; Type: SAM V4.0; Serial: TP 1652
- Measurement SW: DASY52, Version 52.8 (4); SEMCAD X Version 14.6.8 (7028)

Pin=100mW/Area Scan (91x91x1): Interpolated grid: dx=1.000 mm, dy=1.000 mm
Maximum value of SAR (interpolated) = 17.1 W/kg

Pin=100mW/Zoom Scan (7x7x12)/Cube 0: Measurement grid: dx=4mm, dy=4mm, dz=2mm
Reference Value = 61.330 V/m; Power Drift = 0.03 dB
Peak SAR (extrapolated) = 35.1 W/kg
SAR(1 g) = 8.31 W/kg; SAR(10 g) = 2.34 W/kg
Maximum value of SAR (measured) = 17.2 W/kg

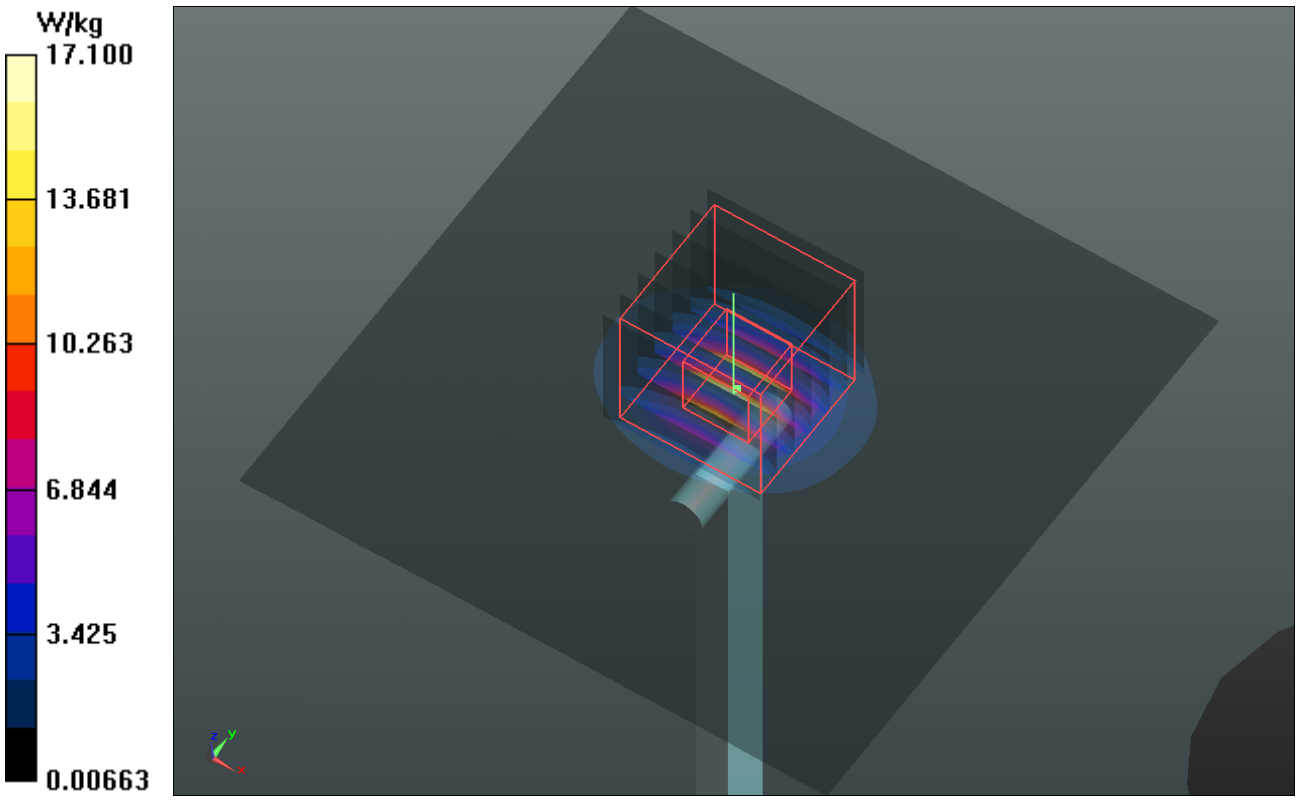

System Check_H5600_140106

DUT: Dipole 5 GHz; Type: D5GHzV2; SN: 1018

Communication System: CW; Frequency: 5600 MHz;Duty Cycle: 1:1
Medium: H5G_0106 Medium parameters used: f = 5600 MHz; σ = 5.302 S/m; ε_r = 35.397; ρ = 1000 kg/m^3
Ambient Temperature：21.2 ℃； Liquid Temperature：20.5 ℃

DASY5 Configuration:
- Probe: EX3DV4 - SN3864; ConvF(4.78, 4.78, 4.78); Calibrated: 2013/07/31;
- Sensor-Surface: 2mm (Mechanical Surface Detection)
- Electronics: DAE4 Sn1277; Calibrated: 2013/07/26
- Phantom: SAM Phantom_Left; Type: SAM V4.0; Serial: TP 1652
- Measurement SW: DASY52, Version 52.8 (4); SEMCAD X Version 14.6.8 (7028)

Pin=100mW/Area Scan (91x91x1): Interpolated grid: dx=1.000 mm, dy=1.000 mm
Maximum value of SAR (interpolated) = 18.5 W/kg

Pin=100mW/Zoom Scan (7x7x12)/Cube 0: Measurement grid: dx=4mm, dy=4mm, dz=2mm
Reference Value = 63.715 V/m; Power Drift = -0.03 dB
Peak SAR (extrapolated) = 37.8 W/kg
SAR(1 g) = 8.75 W/kg; SAR(10 g) = 2.48 W/kg
Maximum value of SAR (measured) = 18.7 W/kg

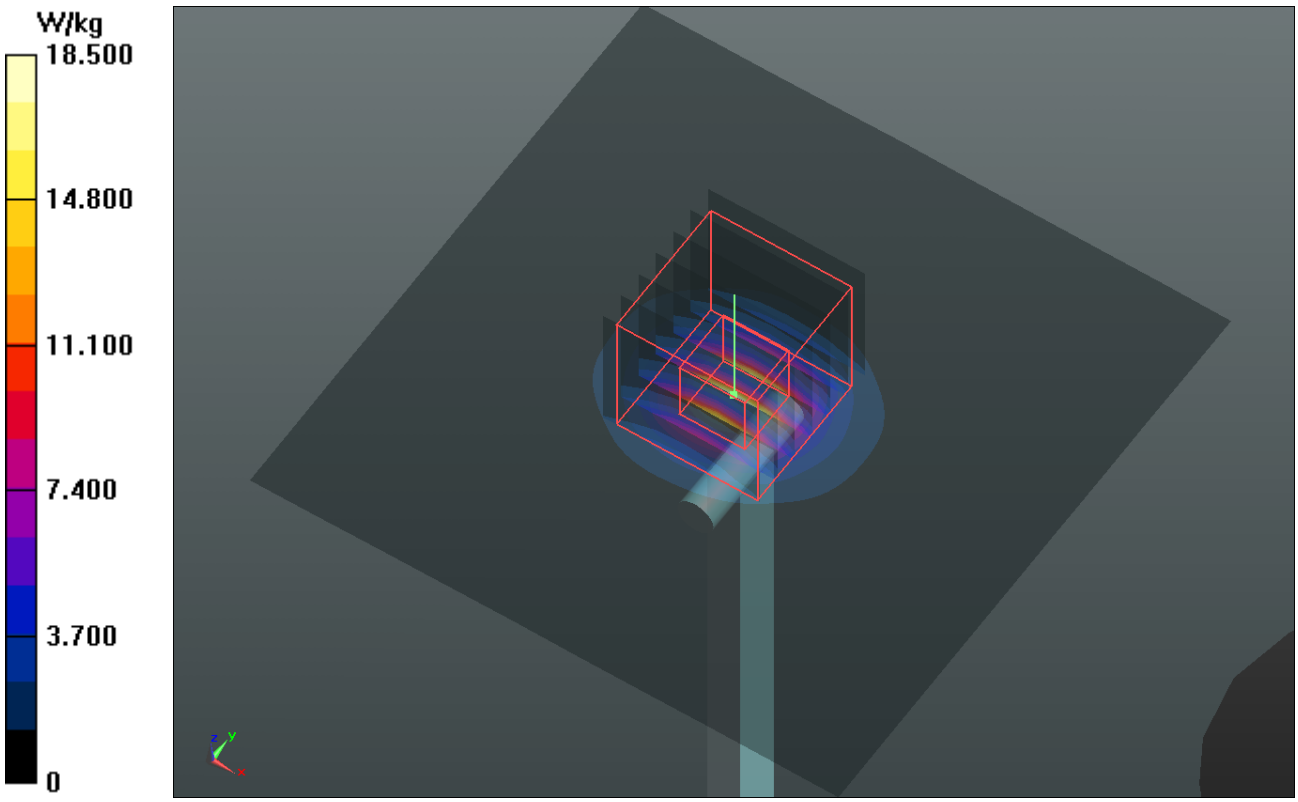

System Check_H5800_140106

DUT: Dipole 5 GHz; Type: D5GHzV2; SN: 1018

Communication System: CW; Frequency: 5800 MHz;Duty Cycle: 1:1
Medium: H5G_0106 Medium parameters used: f = 5800 MHz; σ = 5.524 S/m; ε_r = 35.045; ρ = 1000 kg/m^3
Ambient Temperature：21.2 ℃； Liquid Temperature：20.5 ℃

DASY5 Configuration:
- Probe: EX3DV4 - SN3864; ConvF(4.67, 4.67, 4.67); Calibrated: 2013/07/31;
- Sensor-Surface: 2mm (Mechanical Surface Detection)
- Electronics: DAE4 Sn1277; Calibrated: 2013/07/26
- Phantom: SAM Phantom_Left; Type: SAM V4.0; Serial: TP 1652
- Measurement SW: DASY52, Version 52.8 (4); SEMCAD X Version 14.6.8 (7028)

Pin=100mW/Area Scan (91x91x1): Interpolated grid: dx=1.000 mm, dy=1.000 mm
Maximum value of SAR (interpolated) = 15.8 W/kg

Pin=100mW/Zoom Scan (7x7x12)/Cube 0: Measurement grid: dx=4mm, dy=4mm, dz=2mm
Reference Value = 56.047 V/m; Power Drift = 0.05 dB
Peak SAR (extrapolated) = 33.8 W/kg
SAR(1 g) = 7.37 W/kg; SAR(10 g) = 2.09 W/kg
Maximum value of SAR (measured) = 15.7 W/kg

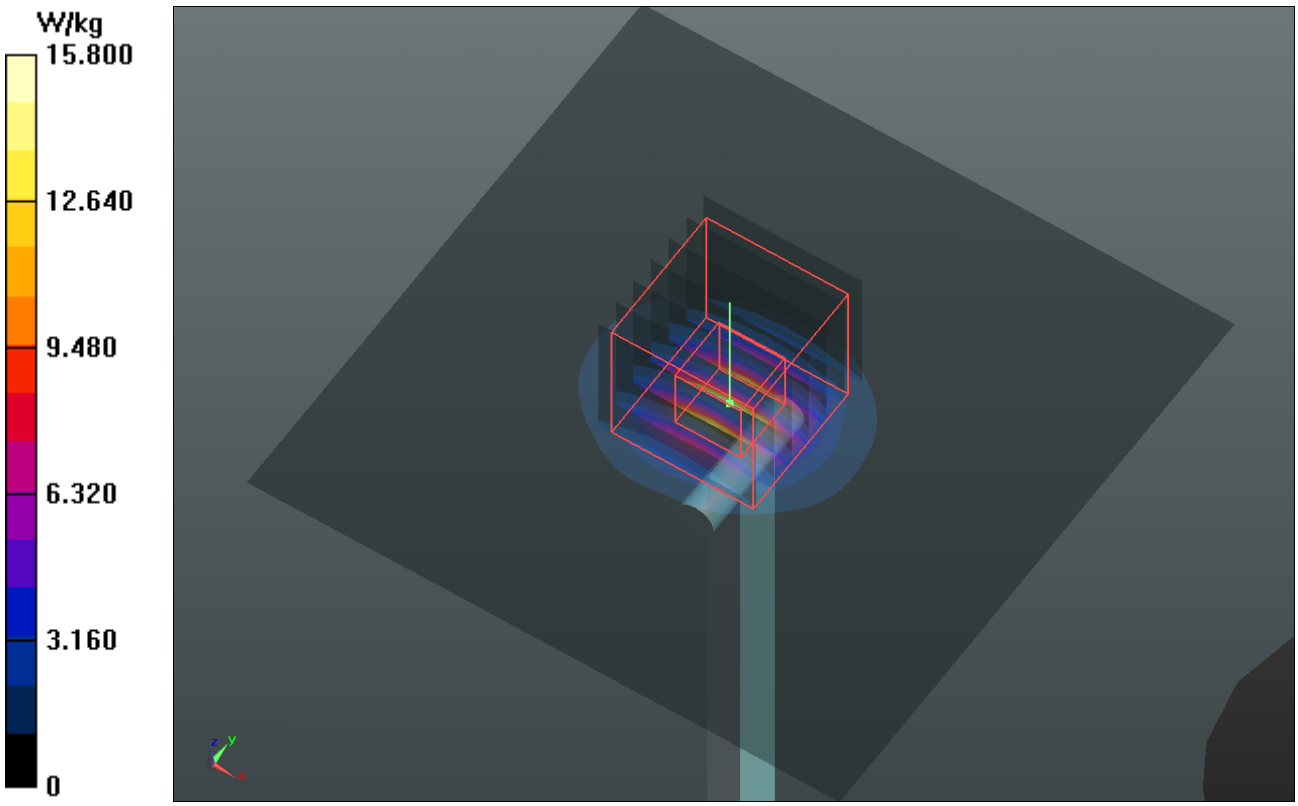

Test Laboratory: Bureau Veritas ADT SAR/HAC Testing Lab Date: 2013/12/26

System Check_B750_131226

DUT: Dipole 750 MHz; Type: D750V3; SN: 1013

Communication System: CW; Frequency: 750 MHz;Duty Cycle: 1:1
Medium: B750_1226 Medium parameters used: f = 750 MHz; σ = 0.969 S/m; ε_r = 55.526; ρ = 1000 kg/m^3
Ambient Temperature：21.5 ℃； Liquid Temperature：20.7 ℃

DASY5 Configuration:
- Probe: EX3DV4 - SN3864; ConvF(10.15, 10.15, 10.15); Calibrated: 2013/07/31;
- Sensor-Surface: 2mm (Mechanical Surface Detection)
- Electronics: DAE4 Sn1277; Calibrated: 2013/07/26
- Phantom: SAM Phantom_Left; Type: SAM V4.0; Serial: TP 1652
- Measurement SW: DASY52, Version 52.8 (4); SEMCAD X Version 14.6.8 (7028)

Pin=250mW/Area Scan (61x81x1): Interpolated grid: dx=1.500 mm, dy=1.500 mm
Maximum value of SAR (interpolated) = 2.82 W/kg

Pin=250mW/Zoom Scan (5x5x7)/Cube 0: Measurement grid: dx=8mm, dy=8mm, dz=5mm
Reference Value = 54.707 V/m; Power Drift = 0.09 dB
Peak SAR (extrapolated) = 3.35 W/kg
SAR(1 g) = 2.29 W/kg; SAR(10 g) = 1.54 W/kg
Maximum value of SAR (measured) = 2.87 W/kg

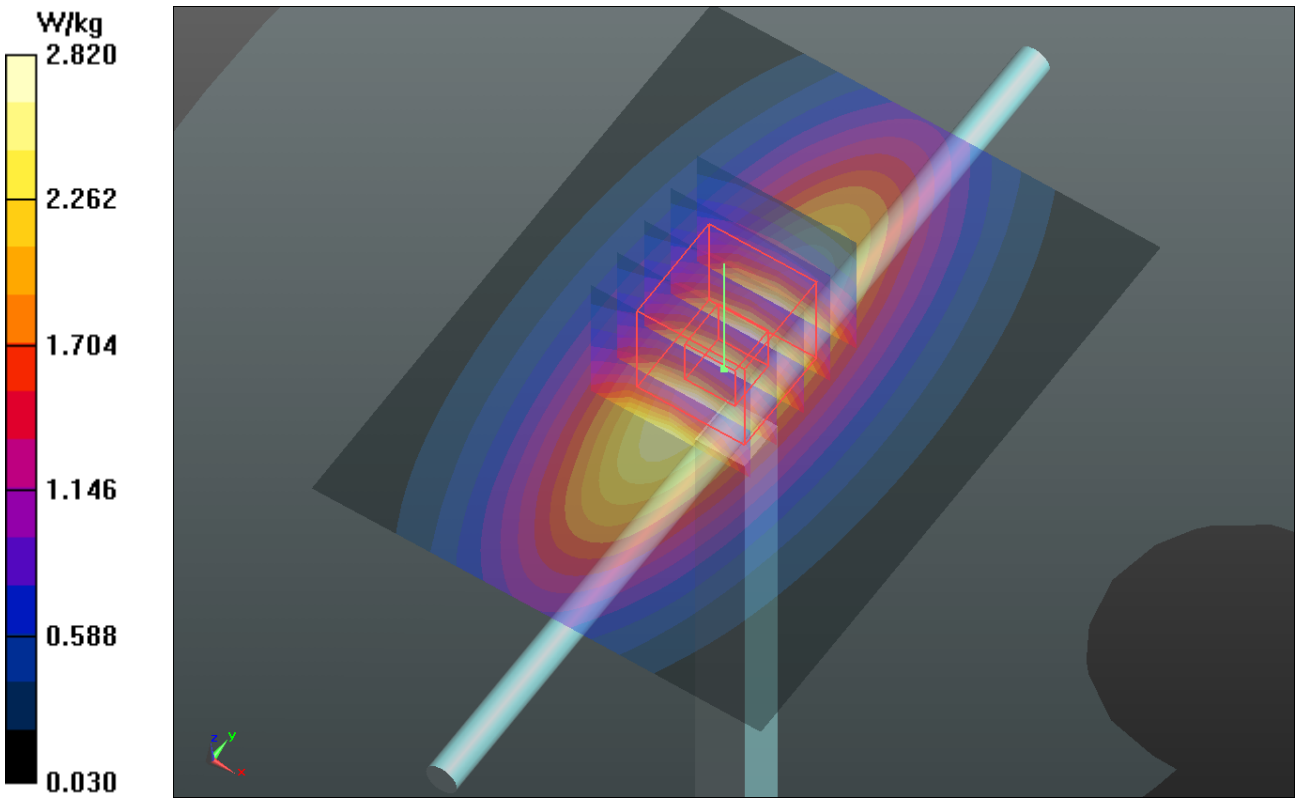

Test Laboratory: Bureau Veritas ADT SAR/HAC Testing Lab Date: 2013/12/26

System Check_B835_131226

DUT: Dipole 835 MHz; Type: D835V2; SN: 4d121

Communication System: CW; Frequency: 835 MHz;Duty Cycle: 1:1
Medium: B835_1226 Medium parameters used: f = 835 MHz; σ = 0.998 S/m; ε_r = 56.679; ρ = 1000 kg/m^3
Ambient Temperature：21.5 ℃； Liquid Temperature：20.7 ℃

DASY5 Configuration:
- Probe: EX3DV4 - SN3864; ConvF(10.14, 10.14, 10.14); Calibrated: 2013/07/31;
- Sensor-Surface: 2mm (Mechanical Surface Detection)
- Electronics: DAE4 Sn1277; Calibrated: 2013/07/26
- Phantom: SAM Phantom_Left; Type: SAM V4.0; Serial: TP 1652
- Measurement SW: DASY52, Version 52.8 (4); SEMCAD X Version 14.6.8 (7028)

Pin=250mW/Area Scan (61x81x1): Interpolated grid: dx=1.500 mm, dy=1.500 mm
Maximum value of SAR (interpolated) = 3.10 W/kg

Pin=250mW/Zoom Scan (5x5x7)/Cube 0: Measurement grid: dx=8mm, dy=8mm, dz=5mm
Reference Value = 56.327 V/m; Power Drift = 0.07 dB
Peak SAR (extrapolated) = 3.65 W/kg
SAR(1 g) = 2.48 W/kg; SAR(10 g) = 1.64 W/kg
Maximum value of SAR (measured) = 3.13 W/kg

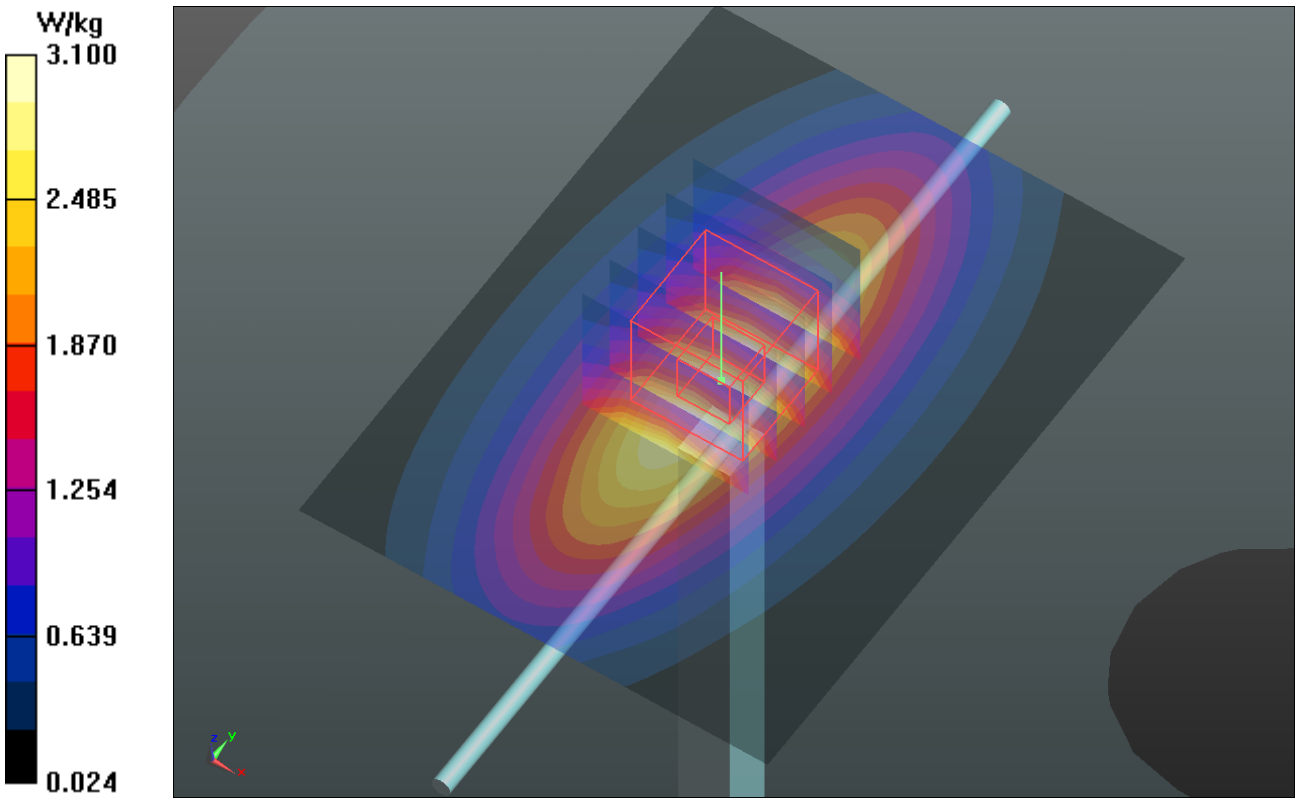

System Check_B1750_131227

DUT: Dipole 1750 MHz; Type: D1750V2; SN: 1055

Communication System: CW; Frequency: 1750 MHz;Duty Cycle: 1:1
Medium: B1750_1227 Medium parameters used: f = 1750 MHz; σ = 1.487 S/m; ε_r = 52.082; ρ = 1000 kg/m^3
Ambient Temperature：21.3 ℃； Liquid Temperature：21.0 ℃

DASY5 Configuration:
- Probe: EX3DV4 - SN3864; ConvF(8.1, 8.1, 8.1); Calibrated: 2013/07/31;
- Sensor-Surface: 2mm (Mechanical Surface Detection)
- Electronics: DAE4 Sn1277; Calibrated: 2013/07/26
- Phantom: SAM Phantom_Front; Type: SAM V4.0; Serial: TP 1485
- Measurement SW: DASY52, Version 52.8 (4); SEMCAD X Version 14.6.8 (7028)

Pin=250mW/Area Scan (61x61x1): Interpolated grid: dx=1.500 mm, dy=1.500 mm
Maximum value of SAR (interpolated) = 13.1 W/kg

Pin=250mW/Zoom Scan (5x5x7)/Cube 0: Measurement grid: dx=8mm, dy=8mm, dz=5mm
Reference Value = 95.471 V/m; Power Drift = -0.07 dB
Peak SAR (extrapolated) = 16.2 W/kg
SAR(1 g) = 9.31 W/kg; SAR(10 g) = 5.02 W/kg
Maximum value of SAR (measured) = 13.1 W/kg

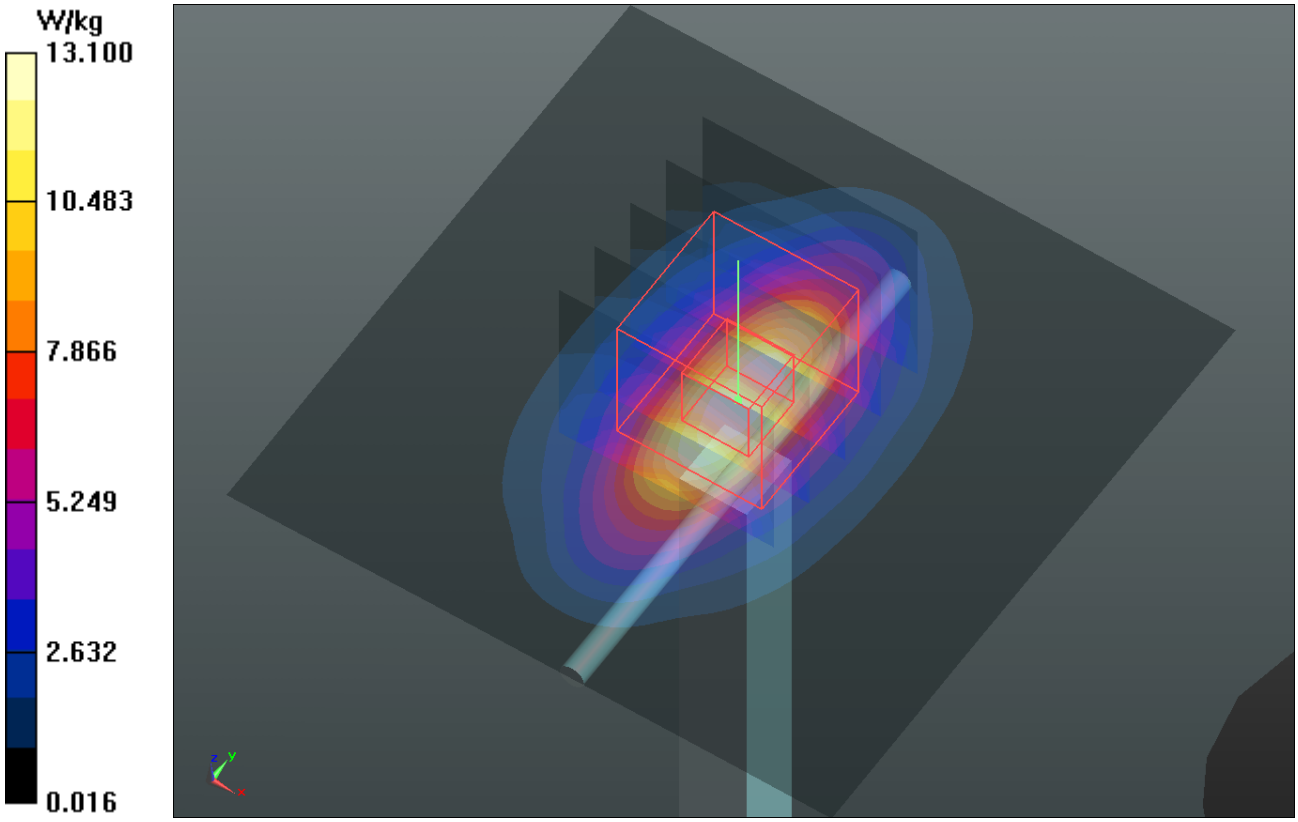

System Check_B1750_140103

DUT: Dipole 1750 MHz; Type: D1750V2; SN: 1055

Communication System: CW; Frequency: 1750 MHz;Duty Cycle: 1:1
Medium: B1750_0103 Medium parameters used: f = 1750 MHz; σ = 1.499 S/m; ε_r = 52.347; ρ = 1000 kg/m^3
Ambient Temperature：21.5 ℃； Liquid Temperature：20.9 ℃

DASY5 Configuration:
- Probe: EX3DV4 - SN3864; ConvF(8.1, 8.1, 8.1); Calibrated: 2013/07/31;
- Sensor-Surface: 2mm (Mechanical Surface Detection)
- Electronics: DAE4 Sn1277; Calibrated: 2013/07/26
- Phantom: SAM Phantom_Left; Type: SAM V4.0; Serial: TP 1652
- Measurement SW: DASY52, Version 52.8 (4); SEMCAD X Version 14.6.8 (7028)

Pin=250mW/Area Scan (61x61x1): Interpolated grid: dx=1.500 mm, dy=1.500 mm
Maximum value of SAR (interpolated) = 13.0 W/kg

Pin=250mW/Zoom Scan (5x5x7)/Cube 0: Measurement grid: dx=8mm, dy=8mm, dz=5mm
Reference Value = 95.050 V/m; Power Drift = -0.09 dB
Peak SAR (extrapolated) = 16.1 W/kg
SAR(1 g) = 9.27 W/kg; SAR(10 g) = 5 W/kg
Maximum value of SAR (measured) = 13.0 W/kg

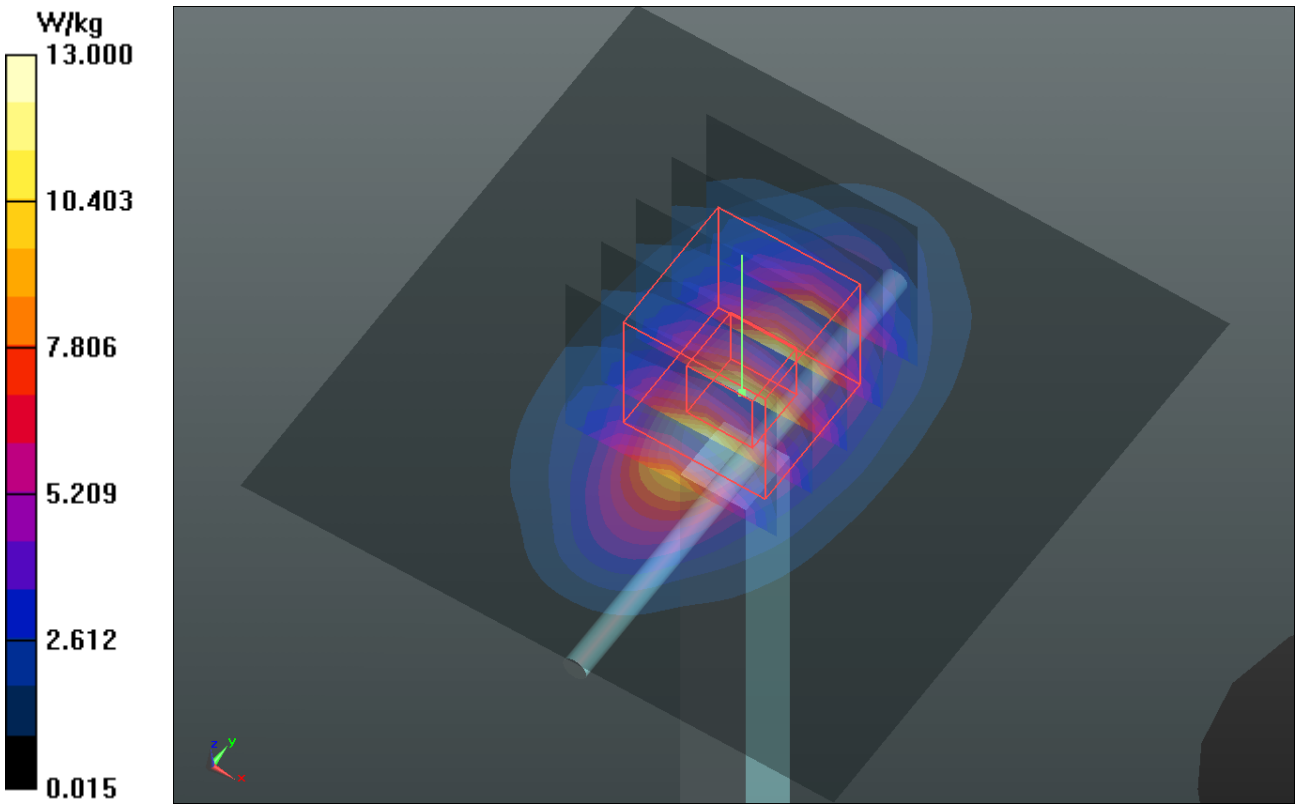

Test Laboratory: Bureau Veritas ADT SAR/HAC Testing Lab Date: 2013/12/27

System Check_B1900_131227

DUT: Dipole 1900 MHz; Type: D1900V2; SN: 5d036

Communication System: CW; Frequency: 1900 MHz;Duty Cycle: 1:1
Medium: B1900_1227 Medium parameters used: f = 1900 MHz; σ = 1.56 S/m; ε_r = 53.444; ρ = 1000 kg/m^3
Ambient Temperature：21.3 ℃； Liquid Temperature：21.0 ℃

DASY5 Configuration:
- Probe: EX3DV4 - SN3864; ConvF(7.87, 7.87, 7.87); Calibrated: 2013/07/31;
- Sensor-Surface: 2mm (Mechanical Surface Detection)
- Electronics: DAE4 Sn1277; Calibrated: 2013/07/26
- Phantom: SAM Phantom_Front; Type: SAM V4.0; Serial: TP 1485
- Measurement SW: DASY52, Version 52.8 (4); SEMCAD X Version 14.6.8 (7028)

Pin=250mW/Area Scan (61x61x1): Interpolated grid: dx=1.500 mm, dy=1.500 mm
Maximum value of SAR (interpolated) = 13.7 W/kg

Pin=250mW/Zoom Scan (5x5x7)/Cube 0: Measurement grid: dx=8mm, dy=8mm, dz=5mm
Reference Value = 95.595 V/m; Power Drift = -0.06 dB
Peak SAR (extrapolated) = 17.3 W/kg
SAR(1 g) = 9.61 W/kg; SAR(10 g) = 4.98 W/kg
Maximum value of SAR (measured) = 13.8 W/kg

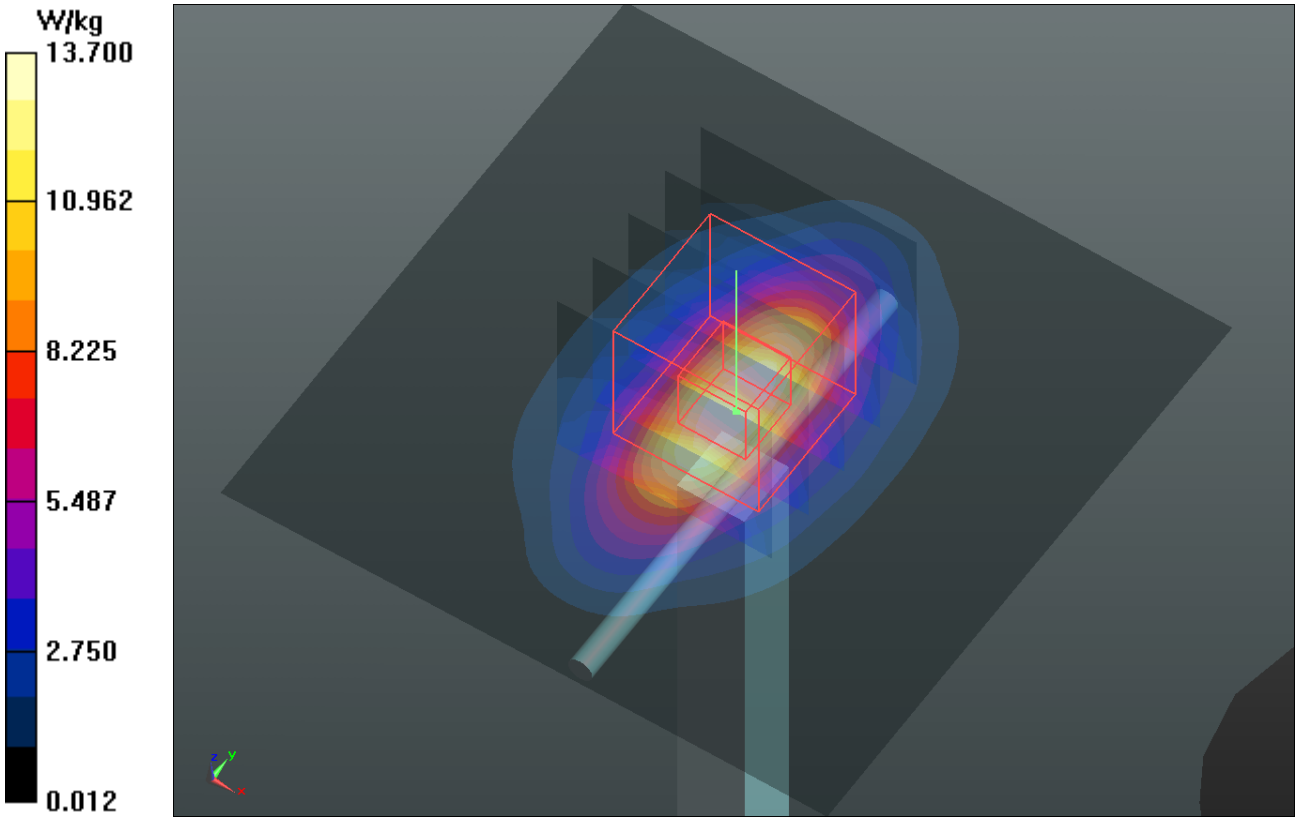

System Check_B2450_140103

DUT: Dipole 2450 MHz; Type: D2450V2; SN: 737

Communication System: CW; Frequency: 2450 MHz;Duty Cycle: 1:1
Medium: B2450_0103 Medium parameters used: f = 2450 MHz; σ = 1.972 S/m; ε_r = 51.404; ρ = 1000 kg/m^3
Ambient Temperature：21.6 ℃； Liquid Temperature：20.8 ℃

DASY5 Configuration:
- Probe: EX3DV4 - SN3864; ConvF(7.4, 7.4, 7.4); Calibrated: 2013/07/31;
- Sensor-Surface: 2mm (Mechanical Surface Detection)
- Electronics: DAE4 Sn1277; Calibrated: 2013/07/26
- Phantom: SAM Phantom_Front; Type: SAM V4.0; Serial: TP 1485
- Measurement SW: DASY52, Version 52.8 (4); SEMCAD X Version 14.6.8 (7028)

Pin=250mW/Area Scan (81x81x1): Interpolated grid: dx=1.200 mm, dy=1.200 mm
Maximum value of SAR (interpolated) = 20.3 W/kg

Pin=250mW/Zoom Scan (7x7x7)/Cube 0: Measurement grid: dx=5mm, dy=5mm, dz=5mm
Reference Value = 101.8 V/m; Power Drift = -0.01 dB
Peak SAR (extrapolated) = 27.6 W/kg
SAR(1 g) = 13.1 W/kg; SAR(10 g) = 6.04 W/kg
Maximum value of SAR (measured) = 20.3 W/kg

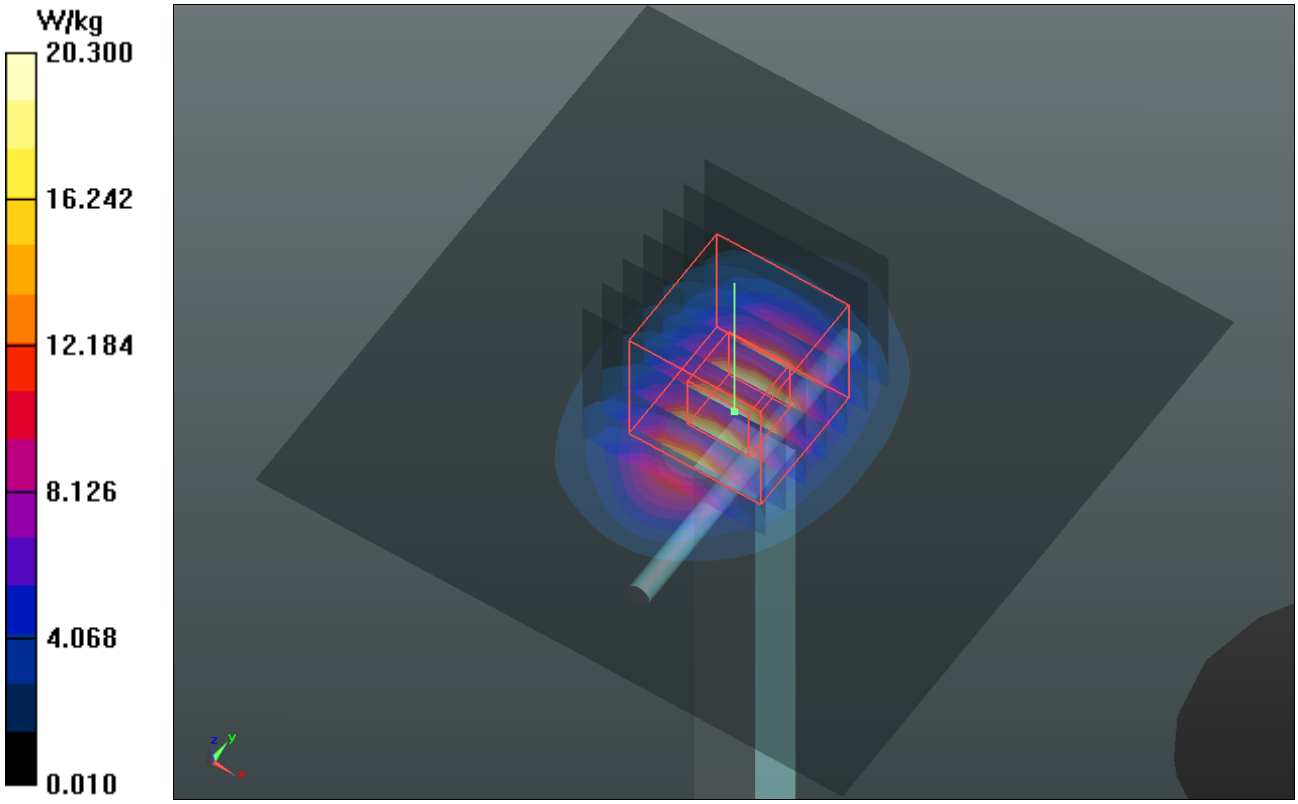

Test Laboratory: Bureau Veritas ADT SAR/HAC Testing Lab Date: 2014/01/03

System Check_B2600_140103

DUT: Dipole 2600 MHz; Type: D2600V2; SN: 1020

Communication System: CW; Frequency: 2600 MHz;Duty Cycle: 1:1
Medium: B2600_0103 Medium parameters used: f = 2600 MHz; σ = 2.192 S/m; ε_r = 52.097; ρ = 1000 kg/m^3
Ambient Temperature：21.6 ℃； Liquid Temperature：20.8 ℃

DASY5 Configuration:
- Probe: EX3DV4 - SN3864; ConvF(7.26, 7.26, 7.26); Calibrated: 2013/07/31;
- Sensor-Surface: 2mm (Mechanical Surface Detection)
- Electronics: DAE4 Sn1277; Calibrated: 2013/07/26
- Phantom: SAM Phantom_Front; Type: SAM V4.0; Serial: TP 1485
- Measurement SW: DASY52, Version 52.8 (4); SEMCAD X Version 14.6.8 (7028)

Pin=250mW/Area Scan (81x81x1): Interpolated grid: dx=1.200 mm, dy=1.200 mm
Maximum value of SAR (interpolated) = 21.9 W/kg

Pin=250mW/Zoom Scan (7x7x7)/Cube 0: Measurement grid: dx=5mm, dy=5mm, dz=5mm
Reference Value = 98.567 V/m; Power Drift = 0.02 dB
Peak SAR (extrapolated) = 29.9 W/kg
SAR(1 g) = 13.7 W/kg; SAR(10 g) = 6.09 W/kg
Maximum value of SAR (measured) = 21.5 W/kg

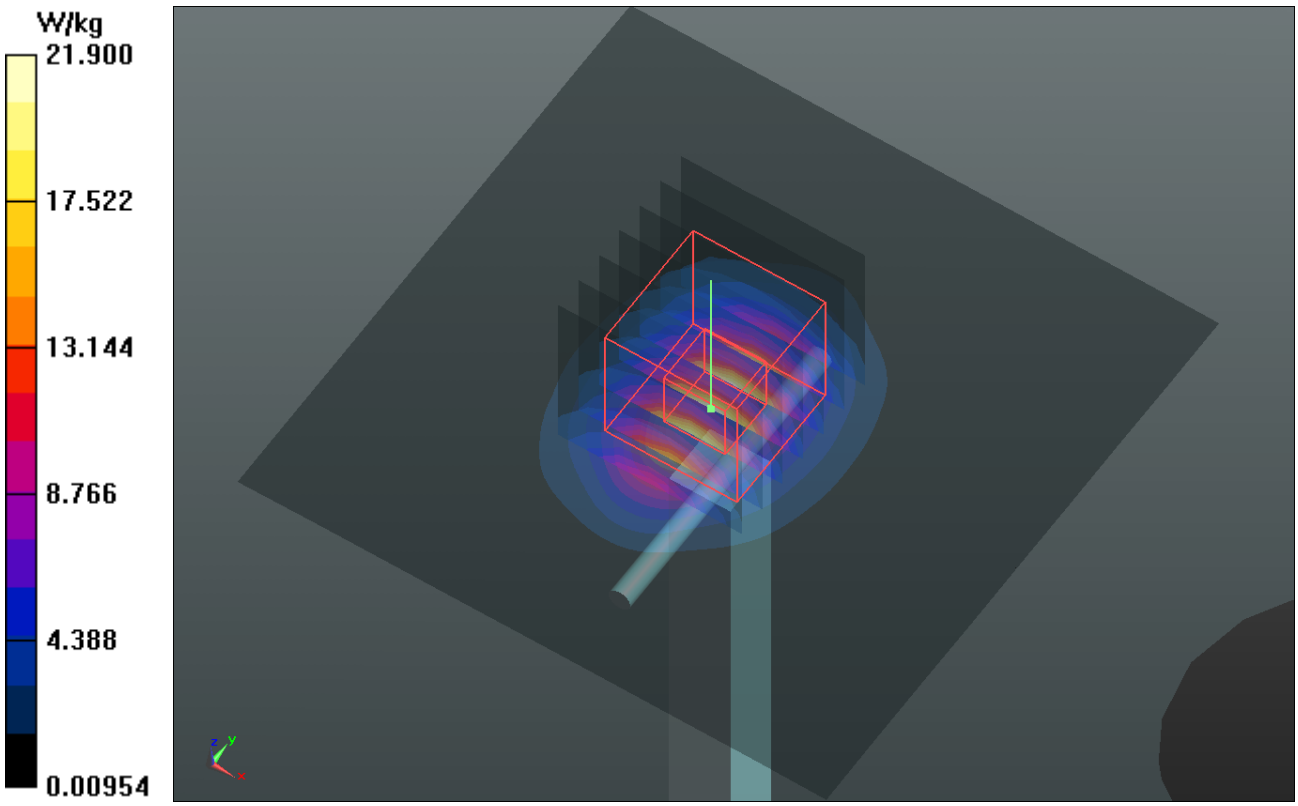

Test Laboratory: Bureau Veritas ADT SAR/HAC Testing Lab Date: 2014/01/07

System Check_B5200_140107

DUT: Dipole 5 GHz; Type: D5GHzV2; SN: 1018

Communication System: CW; Frequency: 5200 MHz;Duty Cycle: 1:1
Medium: B5G_0107 Medium parameters used: f = 5200 MHz; σ = 5.395 S/m; ε_r = 47.744; ρ = 1000 kg/m^3
Ambient Temperature：21.8 ℃； Liquid Temperature：21.4 ℃

DASY5 Configuration:
- Probe: EX3DV4 - SN3864; ConvF(4.49, 4.49, 4.49); Calibrated: 2013/07/31;
- Sensor-Surface: 2mm (Mechanical Surface Detection)
- Electronics: DAE4 Sn1277; Calibrated: 2013/07/26
- Phantom: Flat Phantom ELI4.0; Type: QDOVA001BA; Serial: SN:1204
- Measurement SW: DASY52, Version 52.8 (4); SEMCAD X Version 14.6.8 (7028)

Pin=100mW/Area Scan (91x91x1): Interpolated grid: dx=1.000 mm, dy=1.000 mm
Maximum value of SAR (interpolated) = 15.4 W/kg

Pin=100mW/Zoom Scan (7x7x12)/Cube 0: Measurement grid: dx=4mm, dy=4mm, dz=2mm
Reference Value = 55.366 V/m; Power Drift = 0.08 dB
Peak SAR (extrapolated) = 31.2 W/kg
SAR(1 g) = 7.4 W/kg; SAR(10 g) = 2.08 W/kg
Maximum value of SAR (measured) = 15.4 W/kg

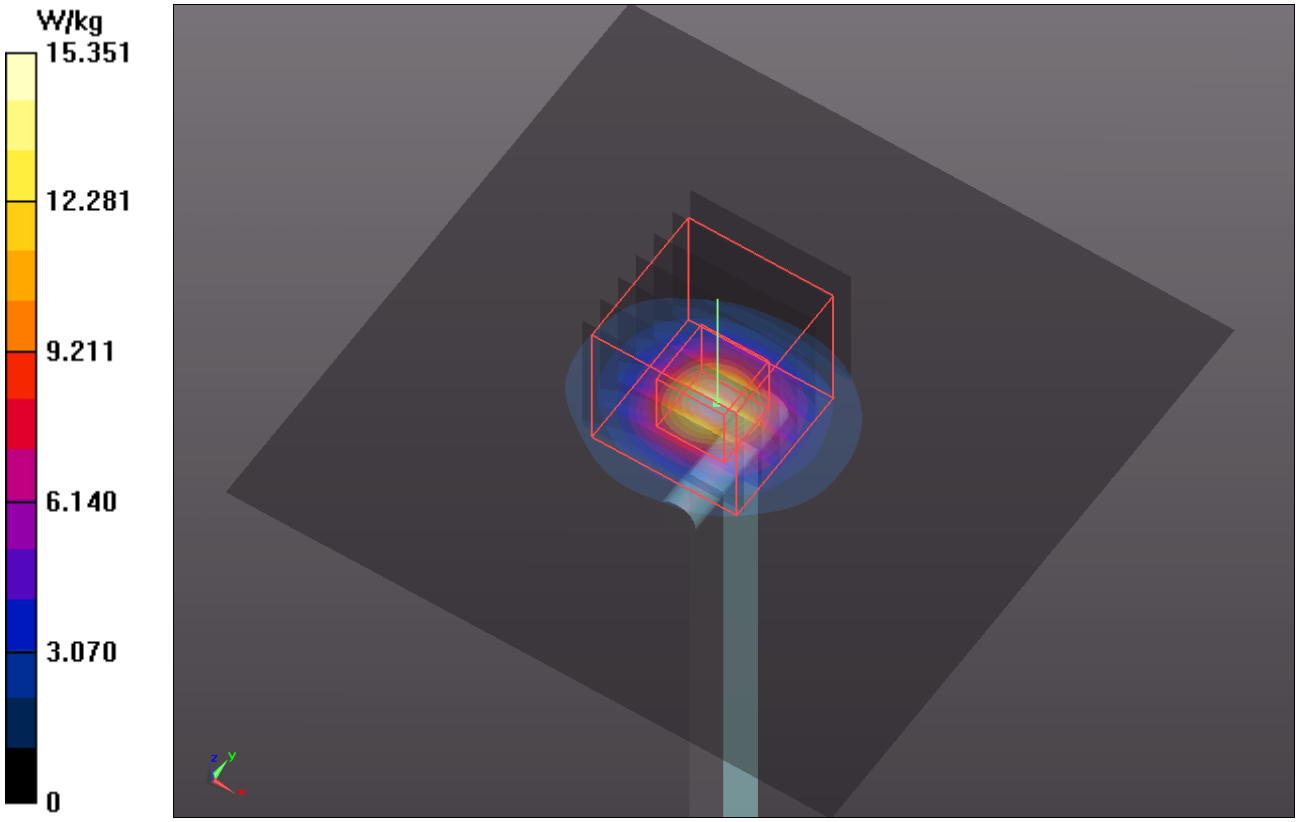

Test Laboratory: Bureau Veritas ADT SAR/HAC Testing Lab Date: 2014/01/07

System Check_B5300_140107

DUT: Dipole 5 GHz; Type: D5GHzV2; SN: 1018

Communication System: CW; Frequency: 5300 MHz;Duty Cycle: 1:1
Medium: B5G_0107 Medium parameters used: f = 5300 MHz; σ = 5.537 S/m; ε_r = 47.539; ρ = 1000 kg/m^3
Ambient Temperature：21.8 ℃； Liquid Temperature：21.4 ℃

DASY5 Configuration:
- Probe: EX3DV4 - SN3864; ConvF(4.01, 4.01, 4.01); Calibrated: 2013/07/31;
- Sensor-Surface: 2mm (Mechanical Surface Detection)
- Electronics: DAE4 Sn1277; Calibrated: 2013/07/26
- Phantom: Flat Phantom ELI4.0; Type: QDOVA001BA; Serial: SN:1204
- Measurement SW: DASY52, Version 52.8 (4); SEMCAD X Version 14.6.8 (7028)

Pin=100mW/Area Scan (91x91x1): Interpolated grid: dx=1.000 mm, dy=1.000 mm
Maximum value of SAR (interpolated) = 14.8 W/kg

Pin=100mW/Zoom Scan (7x7x12)/Cube 0: Measurement grid: dx=4mm, dy=4mm, dz=2mm
Reference Value = 55.644 V/m; Power Drift = 0.01 dB
Peak SAR (extrapolated) = 28.9 W/kg
SAR(1 g) = 7 W/kg; SAR(10 g) = 1.98 W/kg
Maximum value of SAR (measured) = 14.5 W/kg

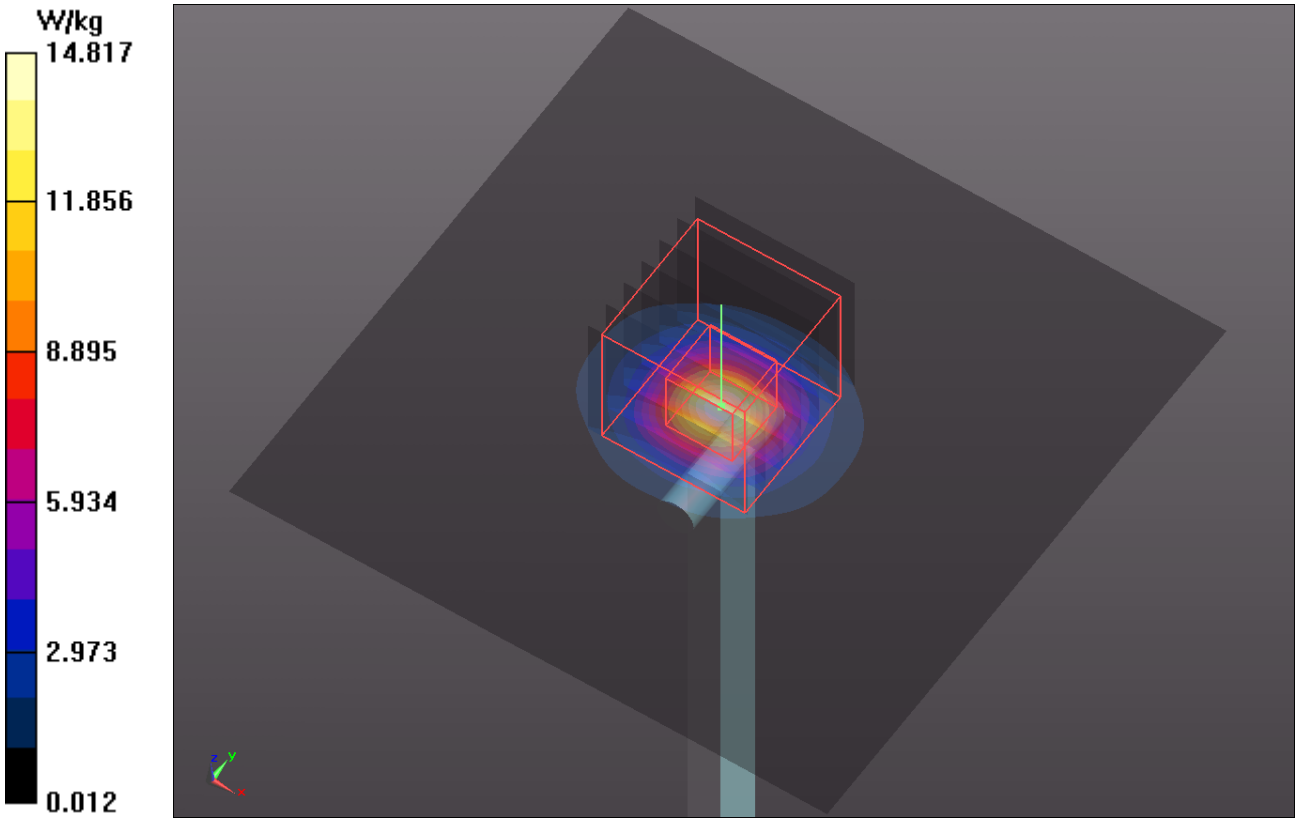

System Check_B5600_140107

DUT: Dipole 5 GHz; Type: D5GHzV2; SN: 1018

Communication System: CW; Frequency: 5600 MHz;Duty Cycle: 1:1
Medium: B5G_0107 Medium parameters used: f = 5600 MHz; σ = 5.958 S/m; ε_r = 46.934; ρ = 1000 kg/m^3
Ambient Temperature：21.8 ℃； Liquid Temperature：21.4 ℃

DASY5 Configuration:
- Probe: EX3DV4 - SN3864; ConvF(3.69, 3.69, 3.69); Calibrated: 2013/07/31;
- Sensor-Surface: 2mm (Mechanical Surface Detection)
- Electronics: DAE4 Sn1277; Calibrated: 2013/07/26
- Phantom: Flat Phantom ELI4.0; Type: QDOVA001BA; Serial: SN:1204
- Measurement SW: DASY52, Version 52.8 (4); SEMCAD X Version 14.6.8 (7028)

Pin=100mW/Area Scan (91x91x1): Interpolated grid: dx=1.000 mm, dy=1.000 mm
Maximum value of SAR (interpolated) = 18.8 W/kg

Pin=100mW/Zoom Scan (7x7x12)/Cube 0: Measurement grid: dx=4mm, dy=4mm, dz=2mm
Reference Value = 59.278 V/m; Power Drift = 0.10 dB
Peak SAR (extrapolated) = 35.0 W/kg
SAR(1 g) = 8.52 W/kg; SAR(10 g) = 2.41 W/kg
Maximum value of SAR (measured) = 17.9 W/kg

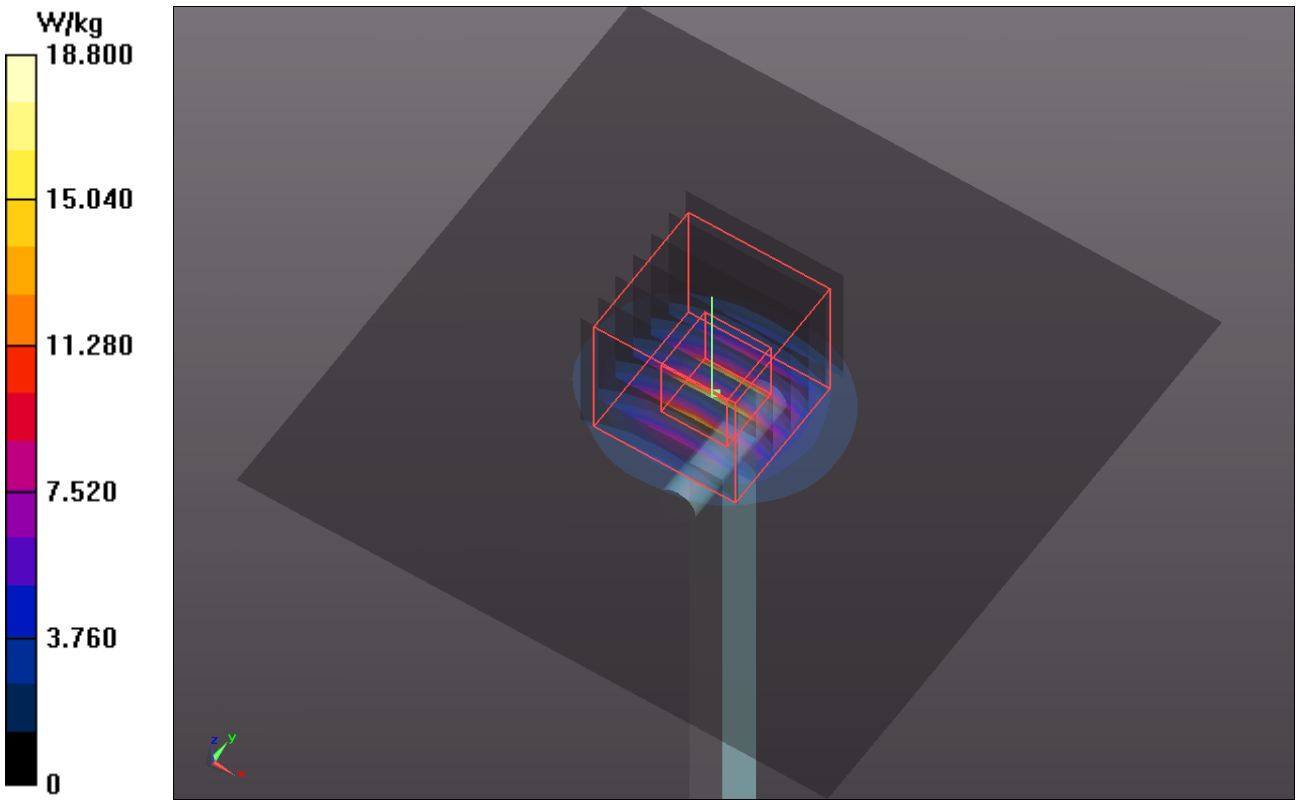

System Check_B5800_140107

DUT: Dipole 5 GHz; Type: D5GHzV2; SN: 1018

Communication System: CW; Frequency: 5800 MHz;Duty Cycle: 1:1
Medium: B5G_0107 Medium parameters used: f = 5800 MHz; σ = 6.235 S/m; ε_r = 46.547; ρ = 1000 kg/m^3
Ambient Temperature：21.8 ℃； Liquid Temperature：21.4 ℃

DASY5 Configuration:
- Probe: EX3DV4 - SN3864; ConvF(3.93, 3.93, 3.93); Calibrated: 2013/07/31;
- Sensor-Surface: 2mm (Mechanical Surface Detection)
- Electronics: DAE4 Sn1277; Calibrated: 2013/07/26
- Phantom: Flat Phantom ELI4.0; Type: QDOVA001BA; Serial: SN:1204
- Measurement SW: DASY52, Version 52.8 (4); SEMCAD X Version 14.6.8 (7028)

Pin=100mW/Area Scan (91x91x1): Interpolated grid: dx=1.000 mm, dy=1.000 mm
Maximum value of SAR (interpolated) = 17.1 W/kg
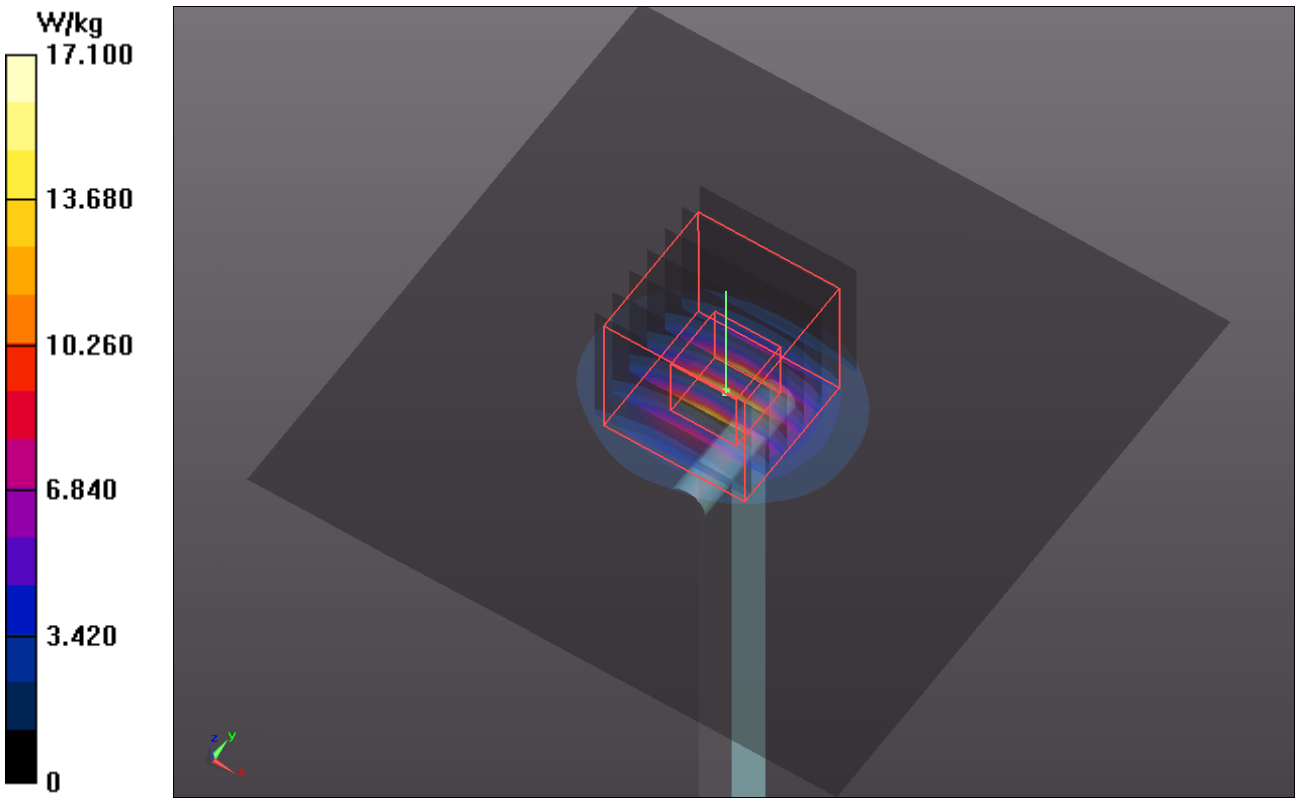
Pin=100mW/Zoom Scan (7x7x12)/Cube 0: Measurement grid: dx=4mm, dy=4mm, dz=2mm
Reference Value = 56.614 V/m; Power Drift = 0.00 dB
Peak SAR (extrapolated) = 33.1 W/kg
SAR(1 g) = 7.78 W/kg; SAR(10 g) = 2.19 W/kg
Maximum value of SAR (measured) = 16.7 W/kg