VIVE

2QD4100

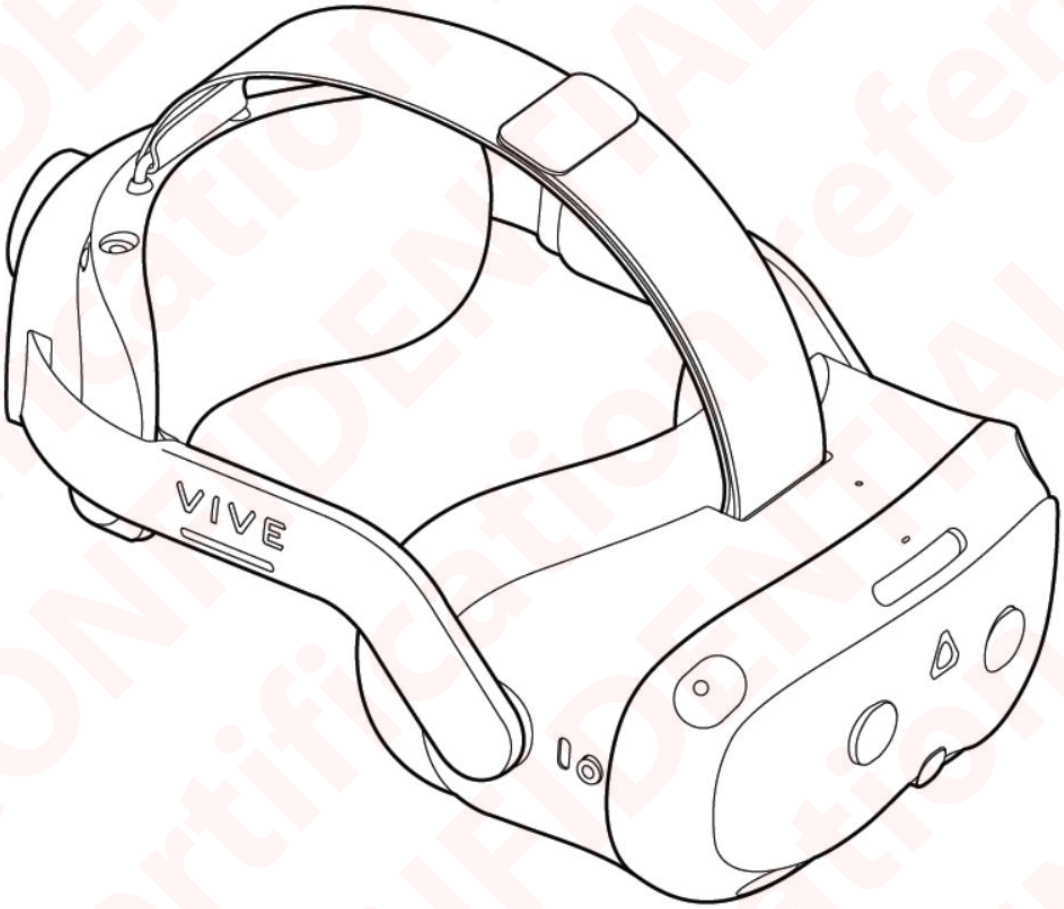

For Certification reference only
HTC CONFIDENTIAL

What's inside the box?

Main component	Accessories
2QD4100	• Headset • Top strap (attached) • Face cushion (attached) • Back pad (attached) • Battery • AC adapter • Gasket spacer
Controllers (x2)	• Splitter cable (charging only)

Components

Top and outside view

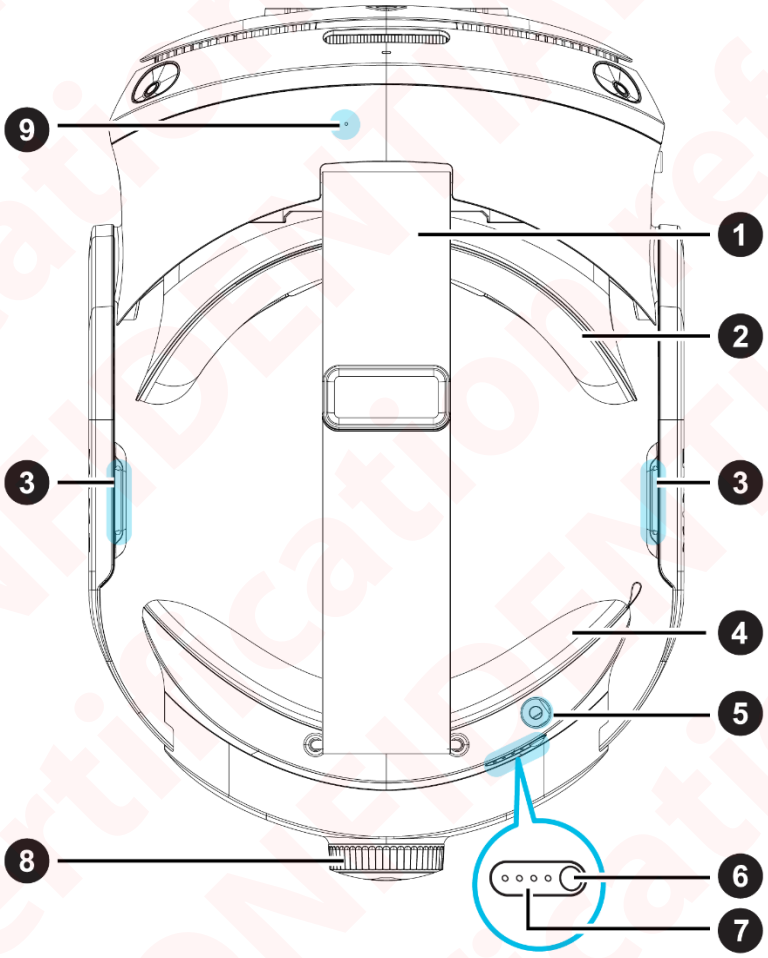

1.	Headset strap
2.	Face cushion and frame
3.	Built-in speaker
4.	Back pad
5.	Charging port
6.	Power button
7.	Battery LEDs
8.	Adjustment dial
9.	Microphone

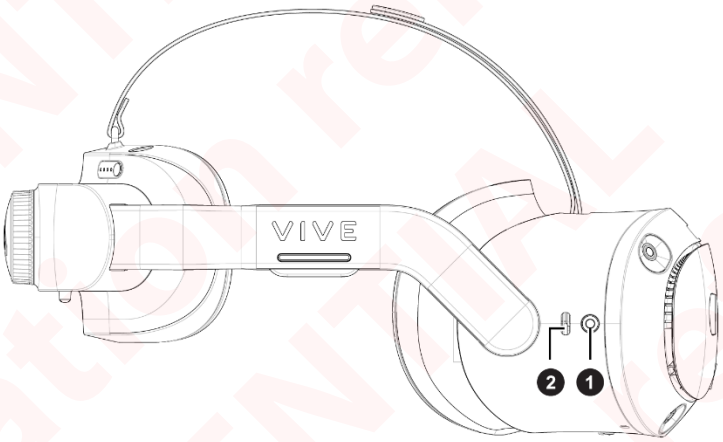

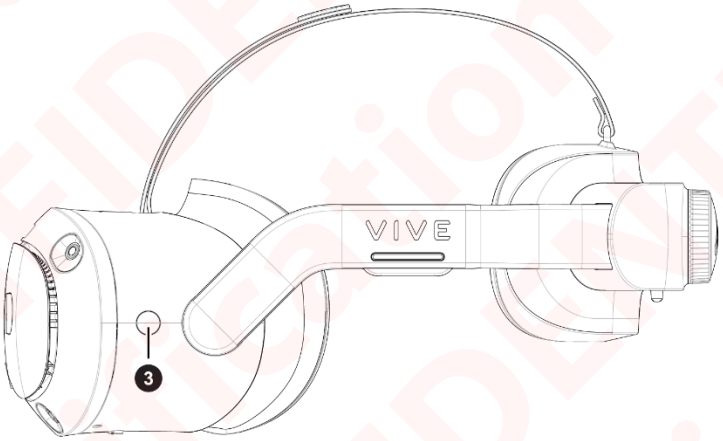

1.	3.5mm audio jack
2.	USB Type-C® port
3.	Headset button

For Certification reference only
HTC CONFIDENTIAL

Bottom and inside view

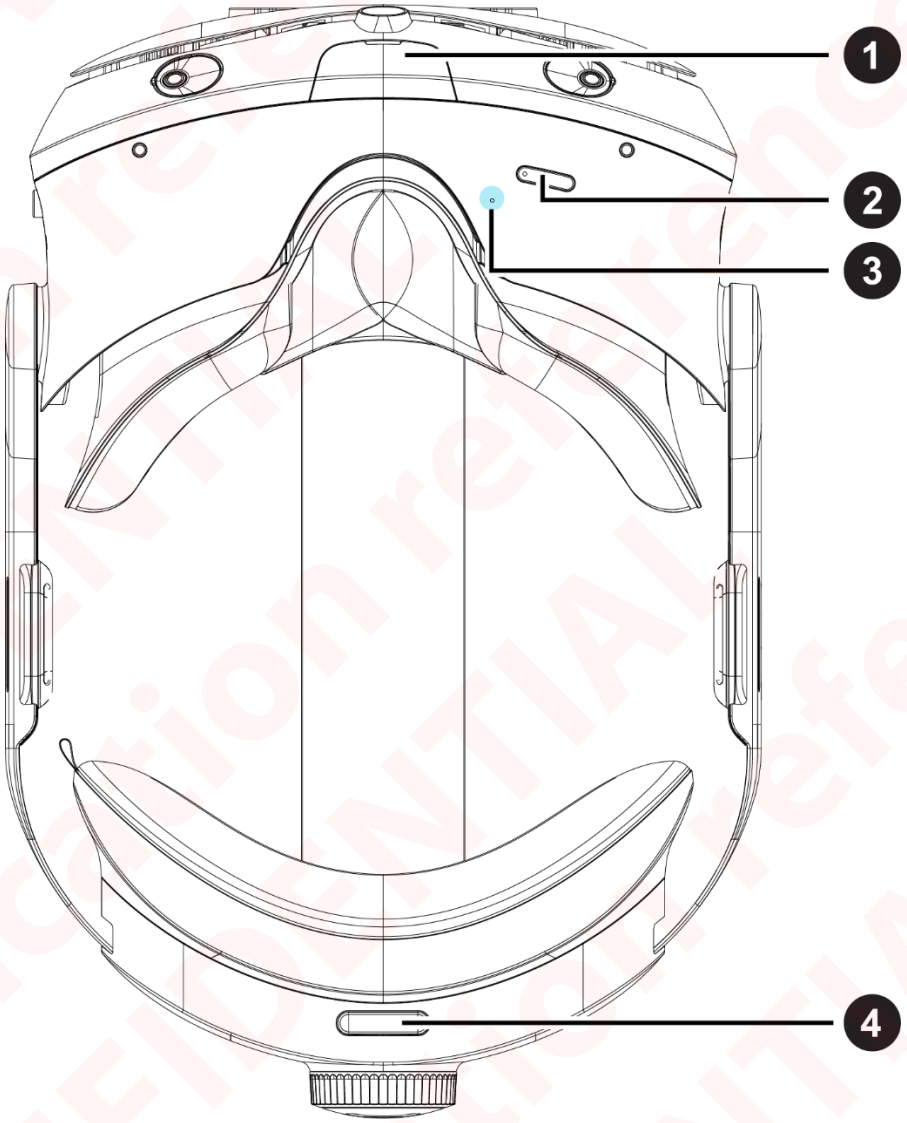

1.	USB Type-C® port (remove cover)
2.	Volume control
3.	Microphone
4.	Quick adjustment button

For Certification reference ONLY CONFIDENTIAL

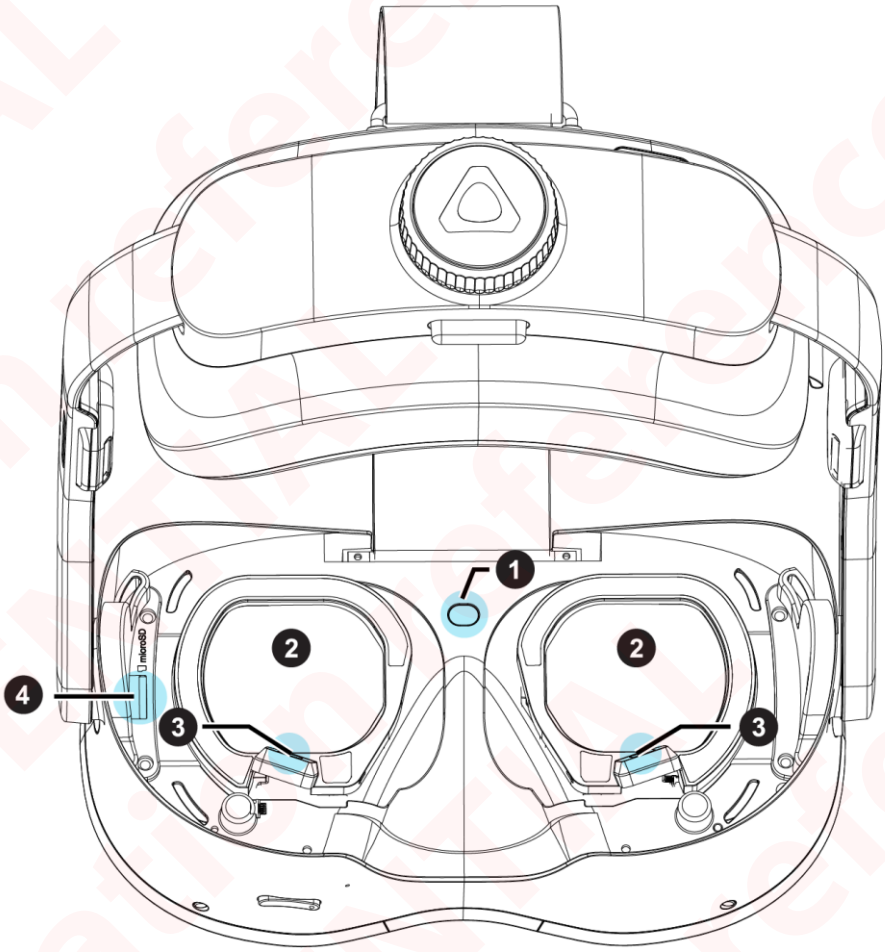

1.	Proximity sensor
2.	Lens
3.	Eye tracking cameras
4.	Micro SD card slot

For Certification reference only
HTC CONFIDENTIAL

Front view

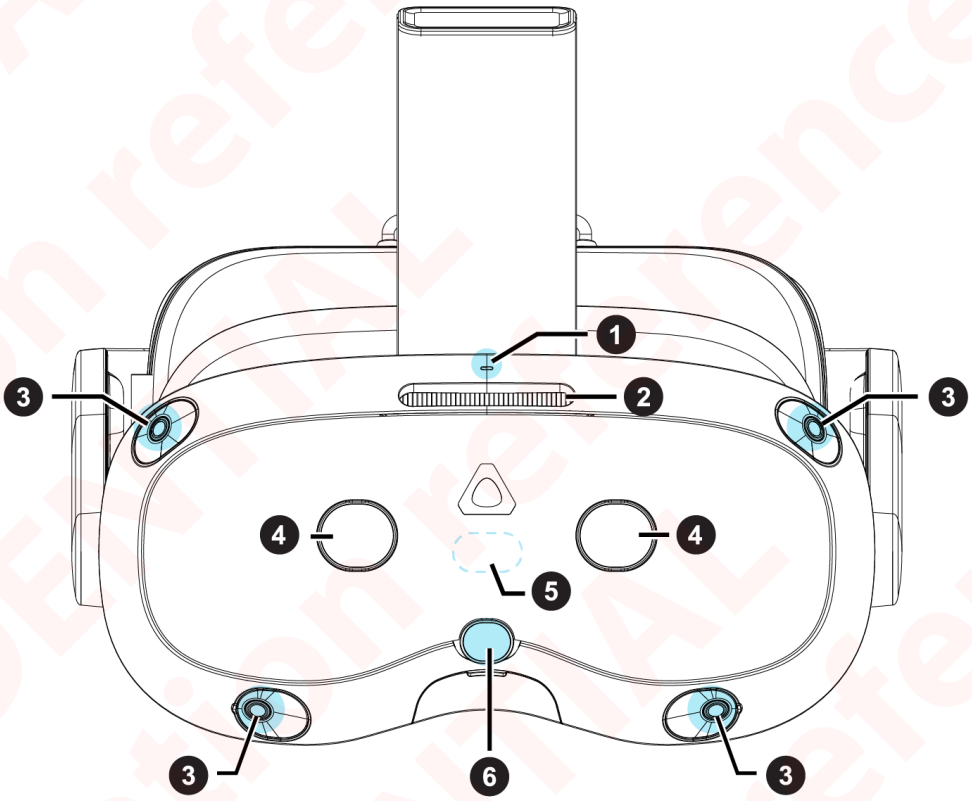

1.	Headset status LED
2.	Vent
3.	Tracking Cameras (x4)
4.	Passthrough cameras (x2)
5.	Flooded IR LED
6.	Depth sensor

For Certification reference only
HTC CONFIDENTIAL

Controller

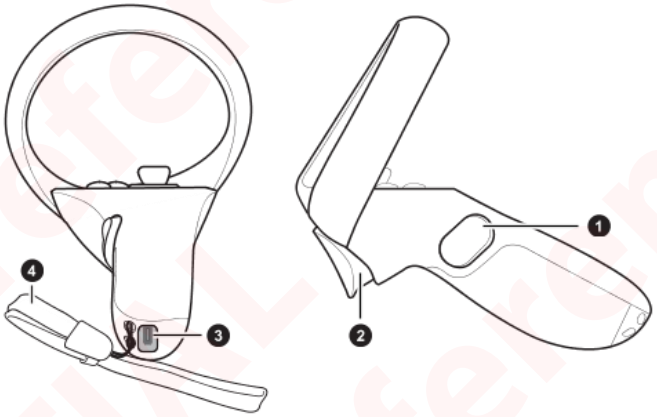

1.	Grip button
2.	Trigger
3.	USB Type-C charging port
4.	Lanyard

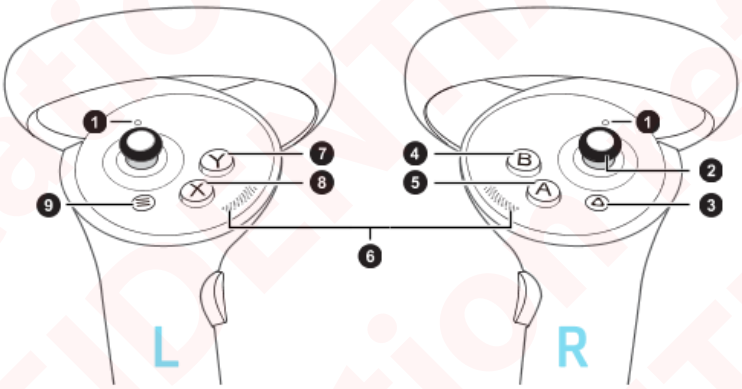

1.	Controller LED
2.	Thumbstick
3.	VIVE button
4.	B button
5.	A button
6.	Thumb rest
7.	Y button
8.	X button
9.	Menu button

Charging the headset

You can charge the headset with the AC adapter. Use power adapter with specification input : 12V / 2.5A.

Charge the headset by connecting the AC adapter to a power outlet, and then connecting it to the headset. Charging the headset while in use is not recommended.

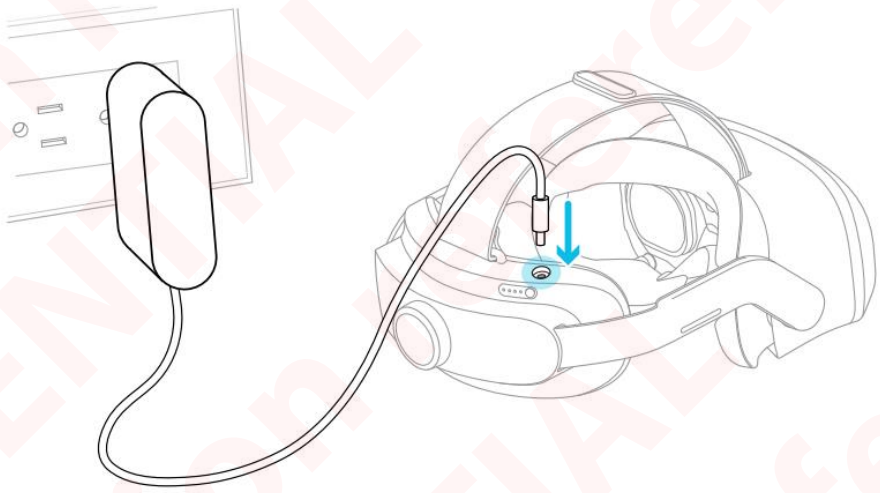

You can charge the battery separately with the same adapter and port.

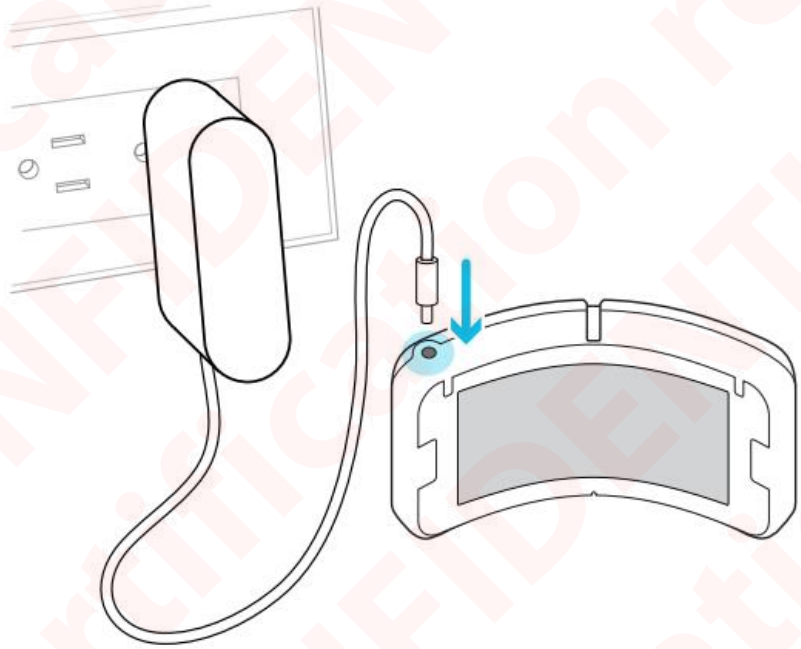

For Certification reference only
HTC CONFIDENTIAL

You can check the battery level by pressing the Power button on the back of the headset.

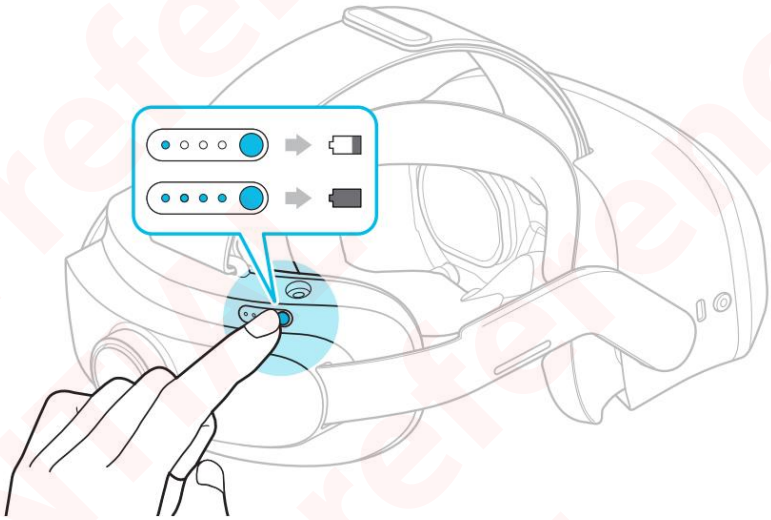

Inserting a storage card

You can set up multiple headsets quickly by using microSD™. You can also save videos on microSD cards and play them on the headset.

To insert a microSD card:

1. Remove the face cushion to reveal the microSD card slot.
2. Insert the microSD card into the card slot with the gold contacts facing away from the lenses. Gently push until it clicks into place. Press the card again to eject.

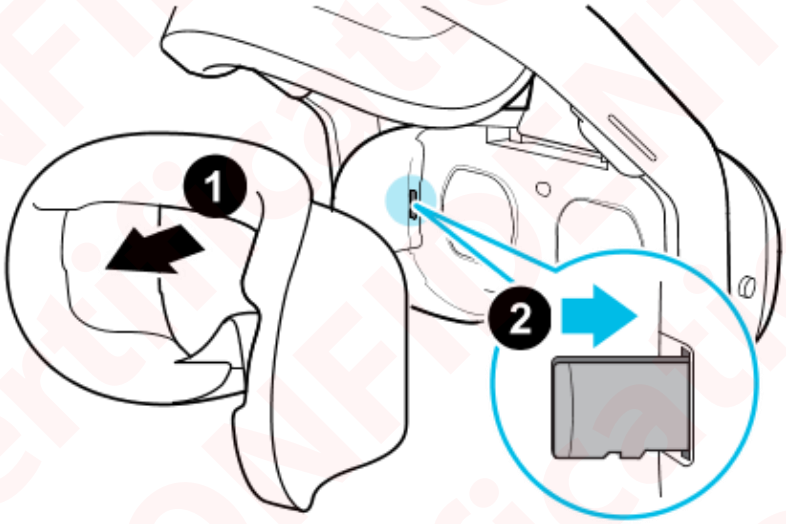

Connecting to a Wi-Fi network

2QD4100 allows you connect to 2.4 GHz and 5 GHz Wi-Fi networks.

2QD4100 also supports the Wi-Fi 6E standard. 2QD4100 can be connected to 6 GHz wireless networks in regions where the headset is certified to use Wi-Fi 6E.

Note:

- Currently, 2QD4100 can only use Wi-Fi 6E in select regions. Because Wi-Fi 6E is still a new standard, availability and channels will be dependent on local legislation in your country.
- Before 2QD4100 can detect 6 GHz wireless networks, you need to connect the headset to a 2.4 GHz or 5 GHz network first. You can then scan for 6 GHz networks to connect to.

Here's how to connect the headset to a Wi-Fi network:

1. Go to **Settings**, and then select **Connectivity** > **Wi-Fi (2.4/5 GHz)**.

   Nearby 2.4 GHz and 5 GHz Wi-Fi networks will be listed.

2. Select the Wi-Fi network to connect to.

3. Enter your login credentials, configure your network settings, and then select **Connect**.

Your selected network will then connect. Your previous network will remain saved, so you can easily reconnect to it later.

For Certification reference only
FTC CONFIDENTIAL

Pairing Bluetooth devices

You can pair Bluetooth devices such as headphones, keyboards, and other accessories with your headset.

Make sure your Bluetooth device is nearby and in pairing mode. Here's how to pair your Bluetooth device with the headset:

1. From Home, select **Settings**.
2. Select **Connectivity**.
3. Select **Bluetooth**.
4. Turn on **Bluetooth** and then select **Pair new device**.
5. Select the Bluetooth device you want to pair with your headset.
6. If your device uses a PIN or code, type the PIN or verify the code.

Tip: Paired devices will be listed on the **Bluetooth** screen.

- To disconnect a device, select the device name and then select **Disconnect**.
- To unpair a selected device, select **Forget**.

For Certification reference only
HTC CONFIDENTIAL