CETECOM ICT Services GmbH

Untertuerkheimer Str. 6-10, 66117 Saarbruecken, Germany Phone: +49 (0) 681 598-0 Fax: -9075
SAR-Laboratory Phone: +49 (0) 681 598-8454 Fax: -8475

Accredited testing-laboratory

DAR registration number: TTI-P-G-166/98

Federal Motor Transport Authority (KBA)
DAR registration number: KBA-P 00070-97

Test report no.: 4-0538-01-01/02
Type identification : PW20
FCC ID: NM8 SN

Table of Content

1 General Information 3
1.1 Notes 3
1.2 Statement of Compliance 3
1.3 Testing laboratory 4
1.4 Details of applicant 4
1.5 Application details 4
1.6 Test item 5
1.7 Test specifications 5
1.7.1 RF exposure limits 5
2 Technical test 6
2.1. Summary of test results 6
2.2 Test environment 6
2.3 Test equipment used 6
2.3.1 E-Field Probe specifications 7
2.4 Test results (Body SAR) 7
2.5 Tissue dielectric properties 8
2.6 Tissue parameters 8
2.7 Measurement uncertainties 9
2.8 System validation 10
Appendix 1: System performance verification 11
Appendix 2: Measurement results (printout from DASY ™) 12
Appendix 3: Photo documentation 14
Appendix 4: Calibration parameters of E-field probe 22
Appendix 5: Certificate of Conformity SAM Phantom 24
Appendix 6: Application Note Validation and system Check 25
Appendix 7: Application Note Spatial Peak SAR Evaluation 34
Appendix 8: Data Storage and Evaluation 35
Appendix 9: System Description 37

1 General Information

1.1 Notes

The test results of this test report relate exclusively to the test item specified in 1.6. The CETECOM ICT Services GmbH does not assume responsibility for any conclusions and generalisations drawn from the test results with regard to other specimens or samples of the type of the equipment represented by the test item.

The test report may only be reproduced or published in full. Reproduction or publication of extracts from the report requires the prior written approval of the CETECOM ICT Services GmbH.

1.2 Statement of Compliance

The SAR values found for the PW20 mobile phone with pocket PC are below the maximum recommended levels of 1.6 W/Kg as averaged over any 1 g tissue according the FCC rule §2.1093, the ANSI/IEEE C 95.1:1992 and the NCRP Report Number 86 for uncontrolled environment.

Tester operator:

2002-02-25	Fabien Coulet	
Date	Name	Signature

Technical responsibility for area of testing:

2002-02-25	Bernd Rebmann	
Date	Name	Signature

1.3 Testing laboratory

CETECOM ICT Services GmbH
Untertürkheimer Straße 6-10, D-66117 Saarbrücken
Germany
Telephone: +49 681 598 - 0
Fax: + 49 681 598 - 8475
e-mail: info@ict.cetecom.de
Internet: http://www.cetecom.com
State of accreditation: The Test laboratory SAR is accredited according to DIN EN 45001.
DAR-No.:TTI-P-G-166/98

Test location, if different from CETECOM ICT Services GmbH

Name: ---
Street: ---
Town: ---
Country: ---
Phone: ---
Fax: ---

1.4 Details of applicant

Name: High Tech Computer Co.
Address: 9F,6-3, Ban-Chian RD., Hsin-Tien
Town: Taipei, Taiwan
Country: China
Phone: +886-2-89724138 Ext 8390
Fax: +886-2-89124136

Contact: Mr. Andy Hsu

1.5 Application details

Date of receipt of application: 2002-01-23

Date of receipt of test item: 2002-01-24

Date of test: 2002-01-28 and 29

Person who have been present during the test: --

1.6 Test item

Equipment name: wireless pocket PC with mobile phone
Model number: HTC Wallaby PW 20
IMEI No: 350340100000000
Frequency: 1880.0 MHz (channel 661)
Used battery: integrated battery
Output power: 29.4 dBm (measured conducted output power)

Auxiliary equipment: body holster

Manufacturer: High Tech Computer Co
9f, 6-3, Ban-Chian Rd
Hsin-Tien
Taipei R.O.C
Contact: Andy Hsu

1.7 Test specifications

Supplement C (Edition 01-01) to OET Bulletin 65 (Edition 97-01)
Draft IEEE Std 1528-200X: Version 6.4:July 2001

1.7.1 RF exposure limits

Human Exposure	Uncontrolled Environment General Population	Controlled Environment Occupational
Spatial Peak SAR* (Brain)	**1.60 mW/g**	8.00 mW/g
Spatial Average SAR** (Whole Body)	0.08 mW/g	0.40 mW/g
Spatial Peak SAR*** (Hands/Feet/Ankle/Wrist)	4.00 mW/g	20.00 mW/g

Table 1: RF exposure limits

Notes:

* The Spatial Peak value of the SAR averaged over any 1 gram of tissue (defined as a tissue volume in the shape of a cube) and over the appropriate averaging time

** The Spatial Average value of the SAR averaged over the whole body.

*** The Spatial Peak value of the SAR averaged over any 10 grams of tissue (defined as a tissue volume in the shape of a cube) and over the appropriate averaging time.

Uncontrolled Environments are defined as locations where there is the exposure of individuals who have no knowledge or control of their exposure.

Controlled Environments are defined as locations where there is exposure that may be incurred by persons who are aware of the potential for exposure, (i.e. as a result of employment or occupation).

2 Technical test

2.1. Summary of test results

☒ No deviations from the technical specification(s) were ascertained in the course of the tests performed.

☐ The deviations as specified in 2.4 and 2.5 were ascertained in the course of the tests performed.

2.2 Test environment

Ambient temperature: 21°C – 23°C

Tissue simulating liquid: 21°C – 23°C

2.3 Test equipment used

Manufacturer	Device	Type	Serial number	Date of last calibration
Schmid & Partner Engineering AG	Dosimetric E-Fiel Probe	ET3DV6	1558	February 20, 2001
Schmid & Partner Engineering AG	Dosimetric E-Fiel Probe	ET3DV6	1559	February 20, 2001
Schmid & Partner Engineering AG	900 MHz System Validation Dipole	D900V2	102	February 13, 2001
Schmid & Partner Engineering AG	1800 MHz System Validation Dipol	D1800V2	287	February 13, 2001
Schmid & Partner Engineering AG	Data acquisition electronics	DAE3V1	413	January 15, 2001
Schmid & Partner Engineering AG	Software	DASY 3 V3.1c	---	Calibration isn't necessary
Schmid & Partner Engineering AG	Phantom	SAM	---	Calibration isn't necessary
Rohde & Schwarz	Universal Radio Communication Tester	CMU 200	U-972406/000	August 30, 2001
Hewlett Packard	Network Analyser S-Param. Test Set	HP 8510C HP 8515 A	2643A03725 2723A01379	January18, 2001
Agilent	Dielectric Probe Kit	Agilent 85070C	US99360146	March 8, 2001

2.3.1 E-Field Probe specifications

Construction:	Symmetrical design with triangular core Built-in optical fiber for surface detection system (ET3DV6 only) Built-in shielding against static chargesPEEK enclosure material (resistant to organic solvents, e.g., glycolether)
Calibration	In air from 10 MHz to 2.5 GHz. In head tissue simulating liquid (HSL) at 900 (800-1000) MHz and 1.8 GHz (1700-1910 MHz) (accuracy ± 9.5%; k=2) Calibration for other liquids and frequencies upon request
Frequency	10 MHz to 3 GHz (dosimetry); Linearity: ± 0.2 dB (30 MHz to 3 GHz)
Directivity	± 0.2 dB in HSL (rotation around probe axis) ± 0.4 dB in HSL (rotation normal to probe axis)
Dynamic Range	5 µW/g to > 100 mW/g; Linearity: ± 0.2 dB
Optical Surface Detection	± 0.2 mm repeatability in air and clear liquids over diffuse reflecting surfaces (ET3DV6 only)
Dimensions	Overall length: 330 mm Tip length: 16 mm Body diameter: 12 mm Tip diameter: 6.8 mm Distance from probe tip to dipole centers: 2.7 mm
Application	General dosimetry up to 3 GHz Compliance tests of mobile phones Fast automatic scanning in arbitrary phantoms (ET3DV6)

2.4 Test results (Body SAR)

The table contains the measured SAR values averaged over a mass of 1 g

Channel (frequency)	Position	Measured SAR value	Limit
661 (1880.0 MHz)	front side	0.537 W/kg	1.6 W/kg
661 (1880.0 MHz)	rear side	0.578 W/kg	1.6 W/kg

Table 2: Test results (Body SAR) 1900 MHz

Note: Upper and lower frequencies were not measured because the values at the middle frequency did not exceed 1.27 W/kg (1.60 W/kg reduced of 2dB)

The calibrated conversion factor at 1800 MHz head tissue decreases approximately 1% per 100 MHz frequency increase. Additional the conversion factor in body tissue is approximately 3% lower

than for head tissue for the same frequency. That means, the correct and used conversion factor for 1880 MHz body tissue is approximately 5.35

2.5 Tissue dielectric properties

The following materials are used for producing the tissue-equivalent materials:

Ingredients (% by weight)	**Frequency (MHz)**									
Used frequency	☐ 450		☐ 835		☐ 900		☒ 1900		☐ 2450	
Tissue Type	Head	Body	Head	Body	Head	Body	Head	Body	Head	Body
Water	38.56	51.16	41.45	52.4	41.05	56.0	52.64	69.91	62.7	73.2
Salt (NaCl)	3.95	1.49	1.45	1.40	1.35	0.76	0.36	0.13	0.5	0.04
Sugar	56.32	46.78	56.0	45.0	56.5	41.76	0.0	0.0	0.0	0.0
HEC	0.98	0.52	1.0	1.0	1.0	1.21	0.0	0.0	0.0	0.0
Bactericide	0.19	0.05	0.1	0.1	0.1	0.27	0.0	0.0	0.0	0.0
Triton X-100	0.0	0.0	0.0	0.0	0.0	0.0	0.0	0.0	36.8	0.0
DGBE	0.0	0.0	0.0	0.0	0.0	0.0	47.0	29.96	0.0	26.7

Table 4: Tissue dielectric properties

Salt: 99+% Pure Sodium Chloride
Sugar: 98+% Pure Sucrose
Water: De-ionized, 16M? + resistivity
HEC: Hydroxyethyl Cellulose
DGBE: 99+% Di(ethylene glycol) butyl ether, [2-(2-butoxyethoxy)ethanol]
Triton X-100 (ultra pure): Polyethylene glycol mono [4-(1,1,3,3-tetramethylbutyl)phenyl]ether

2.6 Tissue parameters

Used Target Frequency	**Target Head Tissue**		**Target Body Tissue**		**Measured Head Tissue**		**Measured Body Tissue**		**Measured Date**
[GHz]	Permit-tivity	Conduc-tivity [S/m]	Permit-tivity	Conduc-tivity [S/m]	Permit-tivity	Conduc-tivity [S/m]	Permit-tivity	Conduc-tivity [S/m]	
☐ 450	43.5	0.87	56.7	0.94	---	---	---	---	---
☐ 835	41.5	0.90	55.2	0.97	---	---	---	---	---
☐ 900	41.5	0.97	55.0	1.05	---	---	---	---	
☐ 915	41.5	0.98	55.0	1.06	---	---	---	---	---
☒ 1900	40.0	1.40	53.3	1.52	---	---	54.6	1.60	14th January 02
☐ 2450	39.2	1.80	52.7	1.95	---	---	---	---	---

Table 5: Parameter of the tissue simulating liquid

Note: The dielectric properties have been measured by the contact probe method at 22°C.

2.7 Measurement uncertainties

The overall combined measurement uncertainty of the measurement system is +/-12,1% (K=1). The breakdown of the individual uncertainties is as follows:

Calibration Error:				
	Probability Distribution	**Standard Uncertainty**		
		900 MHz	**1500 MHz**	**1800 MHz**
Incident power	Rectangular	+/- 1,2 %	+/- 1,2 %	+/- 1,2 %
Mismatch uncertainty	Rectangular	+/- 0,6 %	+/- 0,6 %	+/- 0,6 %
Exp. fitting error (95% confidence)	Normal	+/- 0,4 %	+/- 0,2 %	+/- 0,2 %
Liquid permittivity	Rectangular	+/- 2,3 %	+/- 2,8 %	+/- 2,9 %
Probe positioning	Normal	+/- 0,5 %	+/- 0,8 %	+/- 1.0 %
Field homogeneity	Rectangular	+/- 0,6 %	+/- 1,2 %	+/- 1,4 %
Combined Standard Uncertainty		**+/- 2,8 %**	**+/- 3,4 %**	**+/- 3,6 %**

E-Field Probe Error:				
Error Description	**Error**	**Probability Distribution**	**Weight**	**Standard Uncertainty**
Isotropy around axis	+/- 0,2 dB	U-shape	0,5	+/- 2,4 %
Spherical Isotropy	+/- 0,4 dB	U-shape	0,5	+/- 4,8 %
Isotropy from gradient	+/- 0,5 dB	U-shape	0	
Spatial resolution	+/- 0,5 %	normal	1	+/- 0,5 %
Linearity error	+/- 0,2 dB	rectangular	1	+/- 2,5 %
Calibration error	+/- 3,6 %	normal	1	+/- 3,6 %
Combined Standard Uncertainty:				**+/- 6,9 %**

Source Uncertainty:				
Error Description	**Error**	**Probability Distribution**	**Weight**	**Standard Uncertainty**
Device positioning	+/- 6%	normal	1	+/- 6%
Laboratory set-up	+/- 3 %	normal	1	+/- 3%
Combined Standard Uncertainty:				**+/- 6,7 %**

SAR Evaluation Error					
Error Description	**Error**	**Probability Distribution**	**Weight**	**Standard Uncertainty**	**Offset**
Data acquisition error	+/- 1%	rectangular	1	+/- 0,6 %	
ELF and RF disturbances	+/- 0,25 %	normal	1	+/- 0,25 %	
Conductivity assessment	+/- 10 %	rectangular	1	+/- 5,8 %	
Extrapolation and boundary effects	+/- 3 %	normal	1	+/- 3 %	+ 5 %
Probe positioning	+/- 0,1 mm	normal	1	+/- 1 %	
Integration and cube orientation	+/- 3 %	normal	1	+/- 3 %	
Cube shape inaccuracies	+/- 2 %	rectangular	1	+/- 1.2 %	
Combined Standard Uncertainty:				**+/- 7,4 %**	

Combined Uncertainties		
Error Description	**Standard Uncertainty**	**Offset**
E-field probe errors	+/- 6.9 %	
SAR evaluation error	+/- 7.4 %	+/- 5 %
Source uncertainty	+/- 6,7 %	
Combined Standard Uncertainty:	**+/- 12.1 %**	
Expanded Uncertainty (k=2):	**+/- 24,2 %**	

Table 6: Measurement uncertainties

The measurement uncertainties were performed by Schmid & Partner Engineering AG.

2.8 System validation

The system validation is used for verifying the accuracy of the complete measurement system and performance of the software. The system validation is performed with 1800 MHz head tissue equivalent material according IEEE Std 1528-200X: 2001. (graphic plot attached).

Validation Kit	Frequency	Target SAR_{1g} (197mW)	Target SAR_{10g} (197mW)	Measured SAR_{1g}	Measured SAR_{10g}	Measured date
DV2 1800, S/N:287	1800 MHz	6.67 mW/g	3.46 mW/g	6.48 mW/g	3.37 mW/g	2002.01.21

Table 7: Results system validation

Appendix 1: System performance verification

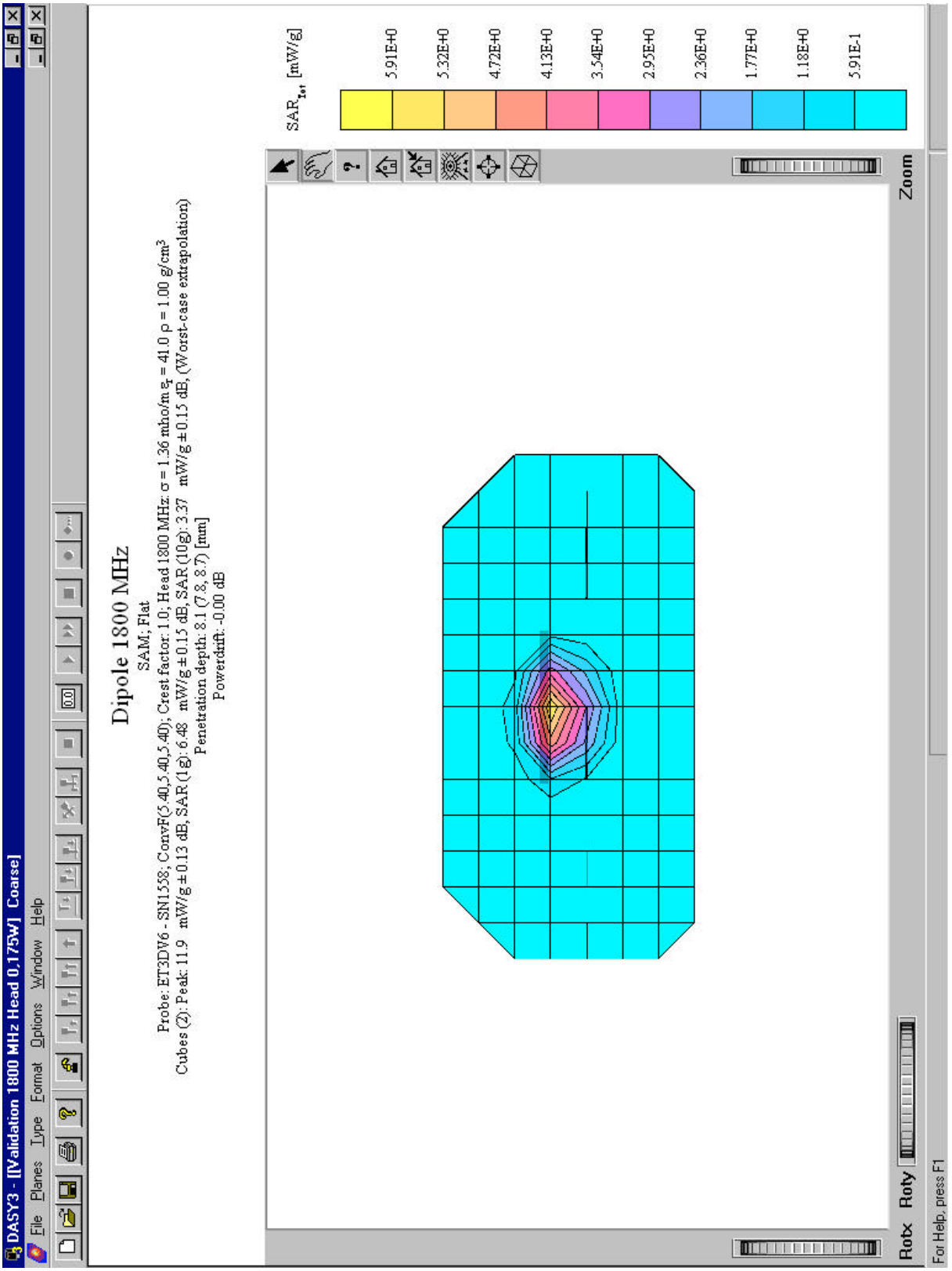

Appendix 2: Measurement results (printout from DASY ™)

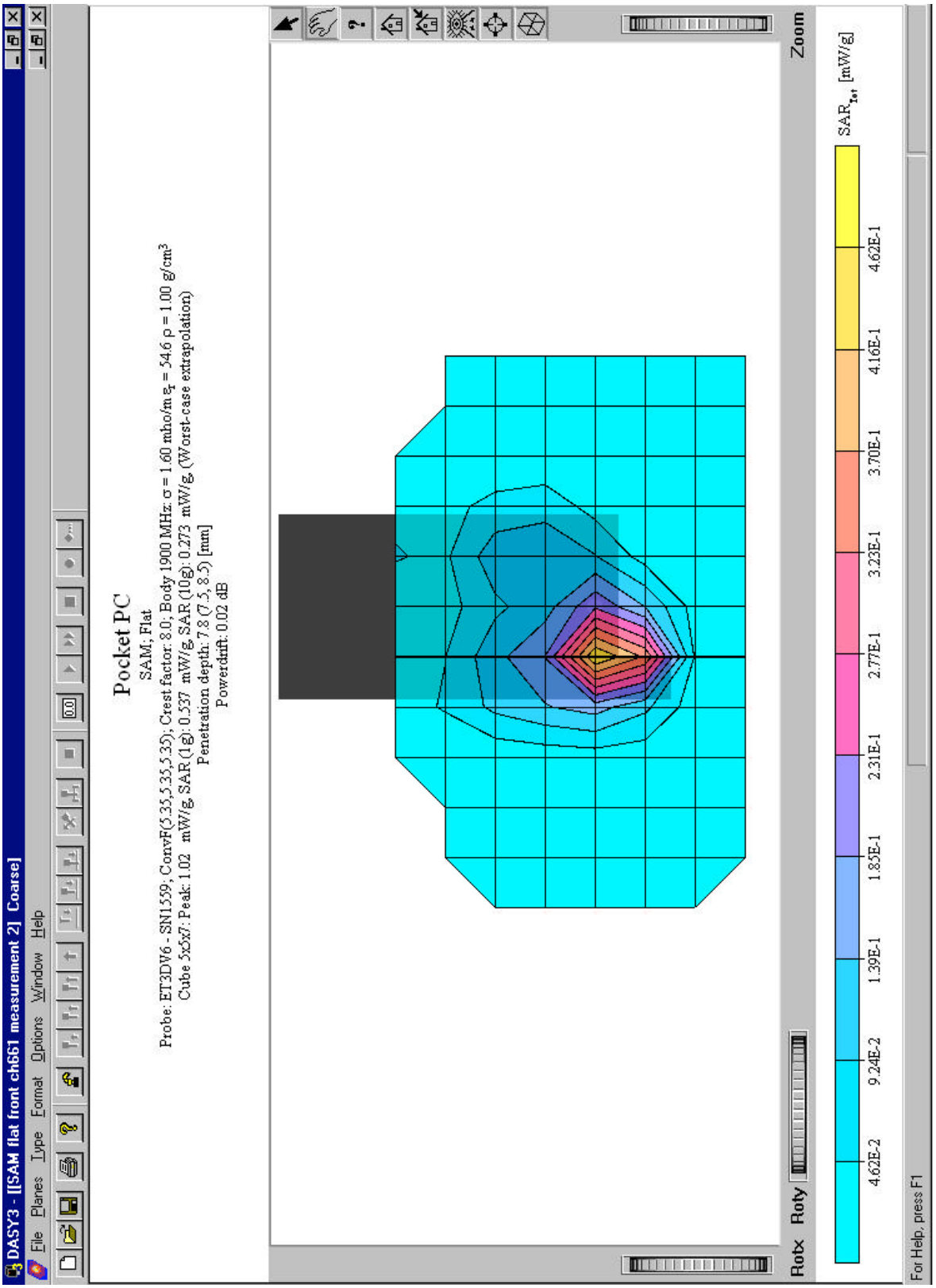

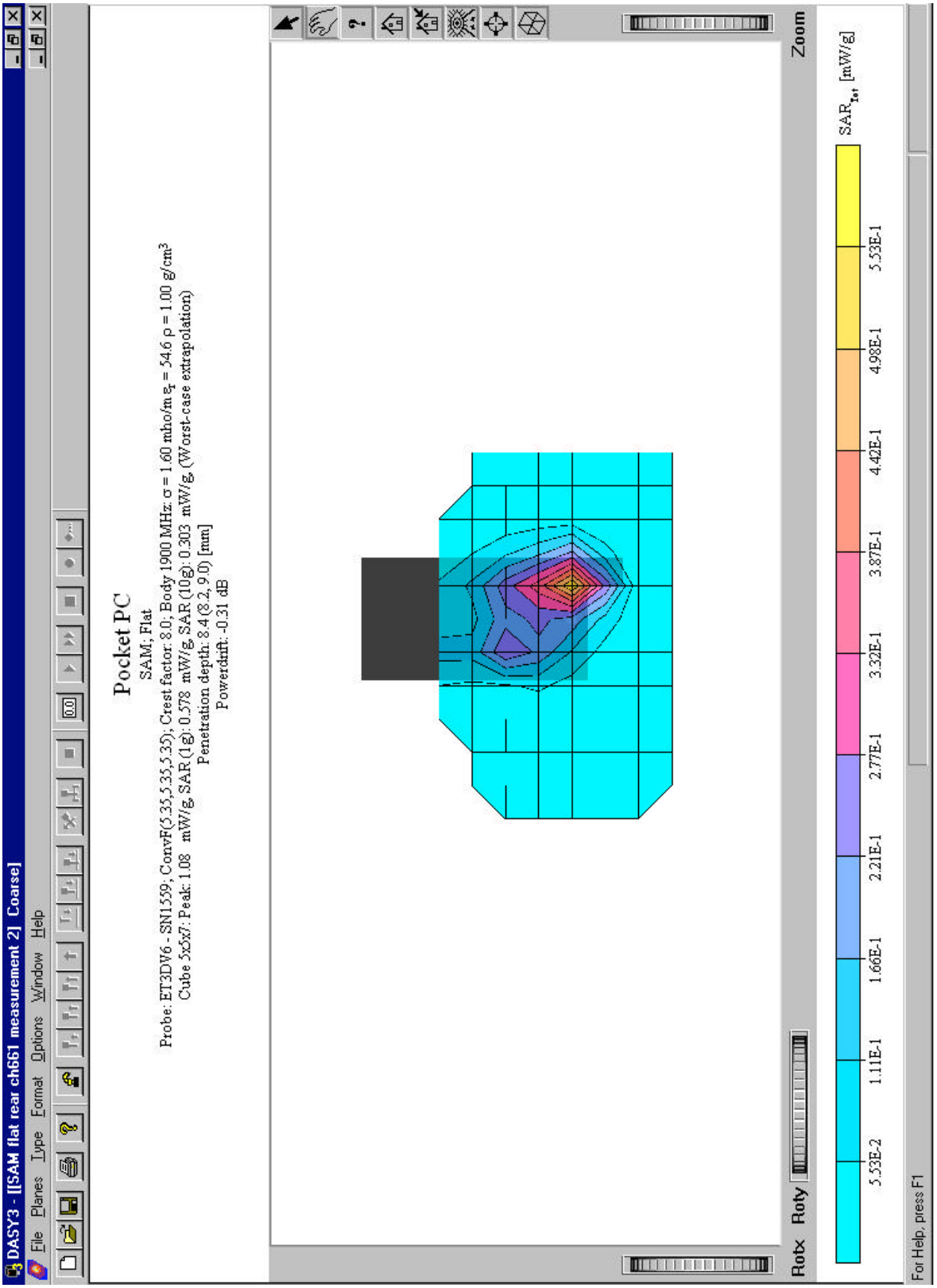
DASY3 - [[SAM flat rear ch661 measurement 2] Coarse]
File Planes Type Format Options Window Help
Pocket PC
SAM; Flat
Probe: ET3DV6 - SN1559; ConvF(5.35,5.35,5.35); Crest factor: 8.0; Body 1900 MHz: σ = 1.60 mho/m ε_r = 54.6 ρ = 1.00 g/cm³
Cube 5x5x7: Peak: 1.08 mW/g SAR (1g): 0.578 mW/g, SAR (10g): 0.303 mW/g, (Worst-case extrapolation)
Penetration depth: 8.4 (8.2, 9.0) [mm]
Powerdrift: -0.31 dB
Zoom
Rotx Roty
SAR_tot [mW/g]
5.53E-2 1.11E-1 1.66E-1 2.21E-1 2.77E-1 3.32E-1 3.87E-1 4.42E-1 4.98E-1 5.53E-1
For Help, press F1

Appendix 3: Photo documentation

Photo 1: Measurement System DASY 3

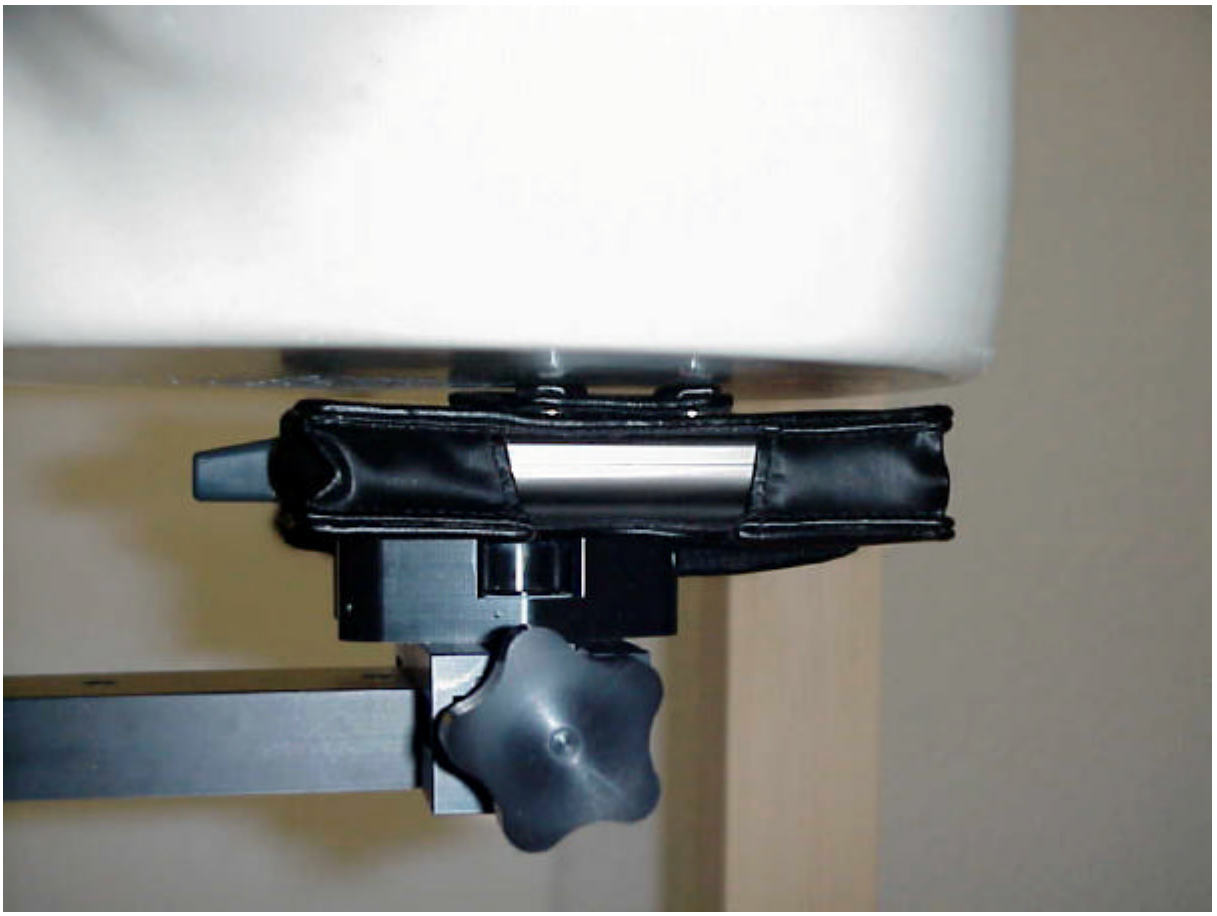

Photo 2: Position flat phantom, front side (body SAR measurement) Distance antenna - phantom:10 mm

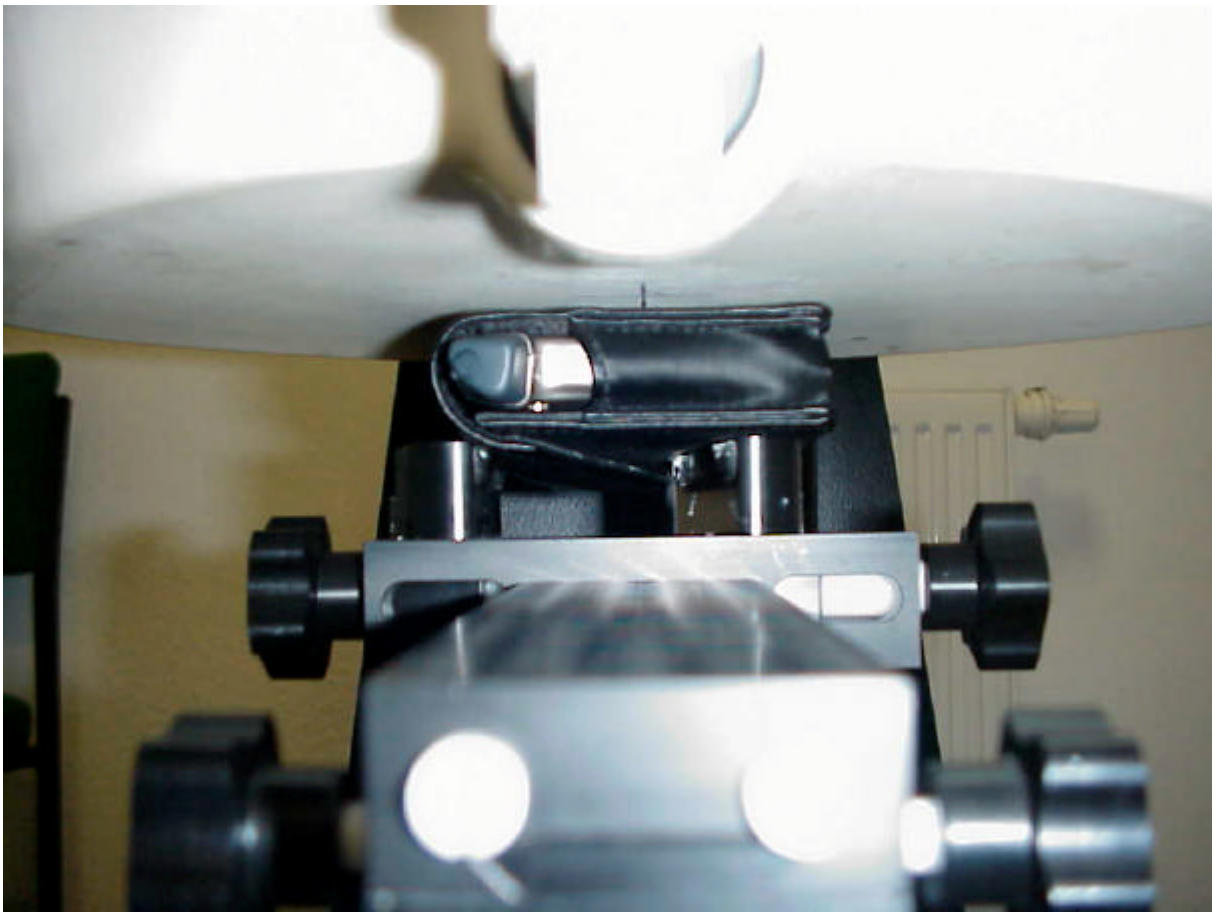

Photo 3: Position flat phantom, front side (body SAR measurement)

Photo 4: EUT front side

Photo 5: EUT rear side

Photo 6: body holster, front side

Photo 7: body holster, left side

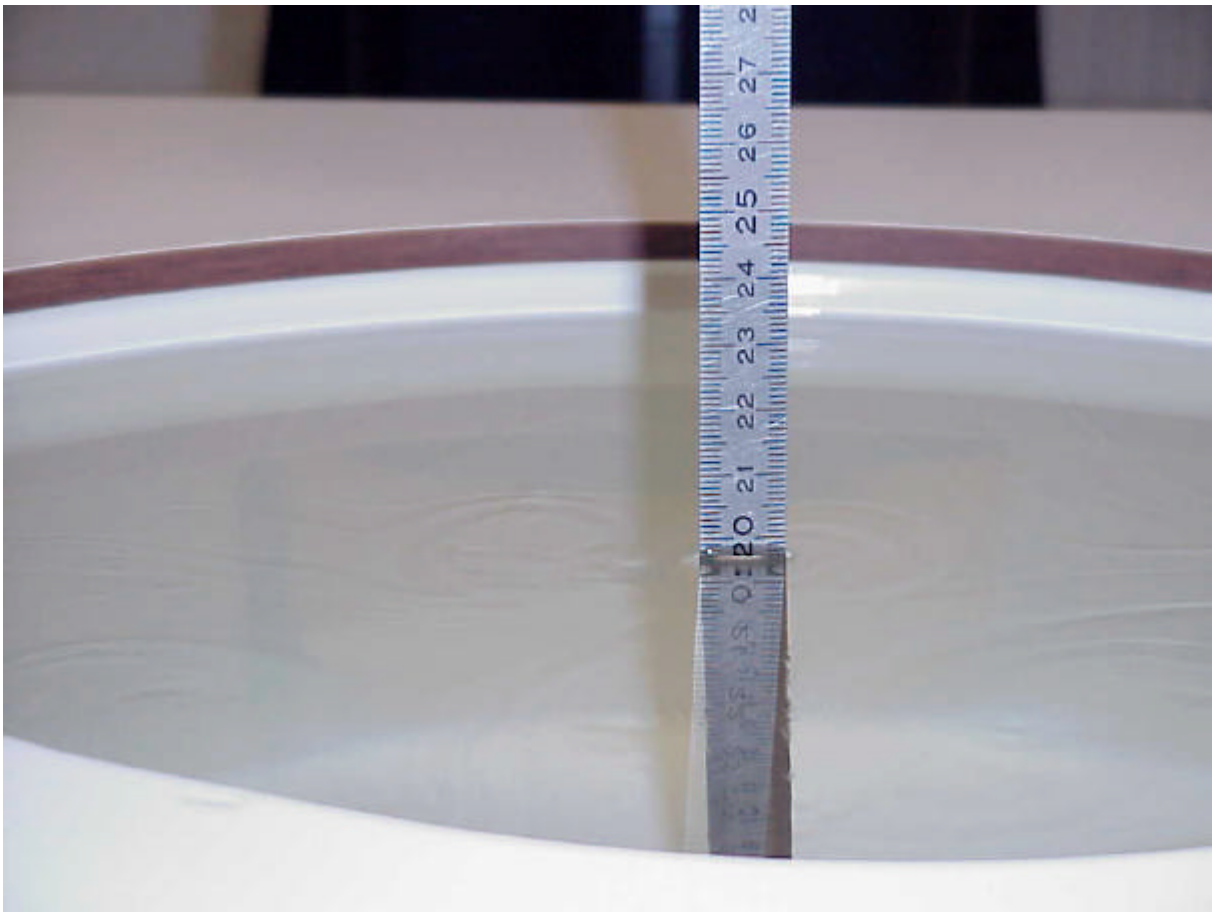

Photo 8: liquid depth

Appendix 4: Calibration parameters of E-field probe

Schmid & Partner
Engineering AG

Zeughausstrasse 43, 8004 Zurich, Switzerland, Phone +41 1 245 97 00, Fax +41 1 245 97 79

Calibration Certificate

Dosimetric E-Field Probe

Type:	**ET3DV6**
Serial Number:	**1559**
Place of Calibration:	**Zurich**
Date of Calibration:	**Feb. 20, 2001**
Calibration Interval:	**12 months**

Schmid & Partner Engineering AG hereby certifies, that this device has been calibrated on the date indicated above. The calibration was performed in accordance with specifications and procedures of Schmid & Partner Engineering AG.

Wherever applicable, the standards used in the calibration process are traceable to international standards. In all other cases the standards of the Laboratory for EMF and Microwave Electronics at the Swiss Federal Institute of Technology (ETH) in Zurich, Switzerland have been applied.

Calibrated by:

Approved by:

ET3DV6 SN:1559

DASY3 - Parameters of Probe: ET3DV6 SN:1559

Sensitivity in Free Space

NormX	**1.51**	$\mu V/(V/m)^2$
NormY	**1.54**	$\mu V/(V/m)^2$
NormZ	**1.51**	$\mu V/(V/m)^2$

Diode Compression

DCP X	**102**	mV
DCP Y	**102**	mV
DCP Z	**102**	mV

Sensitivity in Tissue Simulating Liquid

Head **450 MHz** ε_r **= 43.5 ± 5%** σ **= 0.87 ± 10% mho/m**

ConvF X	**7.27**	extrapolated	Boundary effect:	
ConvF Y	**7.27**	extrapolated	Alpha	**0.22**
ConvF Z	**7.27**	extrapolated	Depth	**3.41**

Head **900 MHz** ε_r **= 42 ± 5%** σ **= 0.97 ± 10% mho/m**

ConvF X	**6.70**	± 7% (k=2)	Boundary effect:	
ConvF Y	**6.70**	± 7% (k=2)	Alpha	**0.30**
ConvF Z	**6.70**	± 7% (k=2)	Depth	**3.03**

Head **1500 MHz** ε_r **= 40.4 ± 5%** σ **= 1.23 ± 10% mho/m**

ConvF X	**5.94**	interpolated	Boundary effect:	
ConvF Y	**5.94**	interpolated	Alpha	**0.42**
ConvF Z	**5.94**	interpolated	Depth	**2.53**

Head **1800 MHz** ε_r **= 40 ± 5%** σ **= 1.40 ± 10% mho/m**

ConvF X	**5.56**	± 7% (k=2)	Boundary effect:	
ConvF Y	**5.56**	± 7% (k=2)	Alpha	**0.48**
ConvF Z	**5.56**	± 7% (k=2)	Depth	**2.27**

Sensor Offset

Probe Tip to Sensor Center	**2.7**	mm
Optical Surface Detection	**2.3 ± 0.2**	mm

Appendix 5: Certificate of Conformity SAM Phantom

Schmid & Partner Engineering AG

Zeughausstrasse 43, 8004 Zurich, Switzerland, Phone +41 1 245 97 00, Fax +41 1 245 97 79

Certificate of conformity / First Article Inspection

Item	SAM Twin Phantom V4.0
Type No	QD 000 P40 BA
Series No	TP-1002 and higher
Manufacturer / Origin	Untersee Composites Hauptstr. 69 CH-8559 Fruthwilen Switzerland

Tests

The series production process used allows the limitation to test of first articles.
Complete tests were made on the pre-series Type No. QD 000 P40 AA, Serial No. TP-1001 and on the series first article Type No. QD 000 P40 BA, Serial No. TP-1006. Certain parameters have been retested using further series units (called samples).

Test	Requirement	Details	Units tested
Shape	Compliance with the geometry according to the CAD model.	IT'IS CAD File (*)	First article, Samples
Material thickness	Compliant with the requirements according to the standards	2mm +/- 0.2mm in specific areas	First article, Samples
Material parameters	Dielectric parameters for required frequencies	200 MHz – 3 GHz Relative permittivity < 5 Loss tangent < 0.05.	Material sample TP 104-5
Material resistivity	The material has been tested to be compatible with the liquids defined in the standards	Liquid type HSL 1800 and others according to the standard.	Pre-series, First article

Standards

[1] CENELEC EN 50361
[2] IEEE P1528-200x draft 6.5
[3] IEC PT 62209 draft 0.9
(*) The IT'IS CAD file is derived from [2] and is also within the tolerance requirements of the shapes of [1] and [3].

Conformity

Based on the sample tests above, we certify that this item is in compliance with the uncertainty requirements of SAR measurements specified in standard [1] and draft standards [2] and [3].

Date 18.11.2001

Signature / Stamp

Schmid & Partner Engineering AG
Zeughausstrasse 43, CH-8004 Zurich
Tel. +41 1 245 97 00, Fax +41 1 245 97 79

Appendix 6: Application Note Validation and system Check

Purpose of validation

The Validation and system check verify that the system operates within ist specifications. System and operator errors can be detected and corrected. It is recommended that the validation be performed prior to any usage of the system in order to guarantee reproducible results.

The measurement of the Specific Absorption Rate (SAR) is a complicated task and the resultdepends on the proper functioning of many components and the correct settings of manyparameters. Faulty results due to drift, failures or incorrect parameters might not berecognized, since they often look similar in distribution to the correct ones. The DosimetricAssessment System DASY3 incorporates a validation procedure to test the properfunctioning of the system. The system validation uses normal SAR measurements in asimplified setup (the flat phantom section of the Generic Twin Phantom) with a wellcharacterized source (a matched dipole of a specified distance). This setup was selected to give a high sensitivity to all parameters that might fail or vary over time (e.g. probe, liquid parameters, and software settings) and a low sensitivity to external effects inherent in the system (e.g. positioning uncertainty of the device holder). The validation does not replace the calibration of the components. The accuracy of the validation is not sufficient for calibration purposes. It is possible to calculate the field quite accurately in this simple setup; however, due to the open field situation some factors (e.g. laboratory reflections) cannot be accounted for. Calibrations in the flat phantom are possible with transfer calibration methods, using either temperature probes or calibrated E-field probes. The validation also does not test the system performance for arbitrary field situations encountered during real measurements of mobile phones. These checks are performed at SPEAG by testing the components under various conditions (e.g. spherical isotropy measurements in liquid, linearity measurements, temperature variations, etc.), the results of which are used for an error estimation of the system. The validation will indicate situations where the system uncertainty is exceeded due to drift or failure.

Validation procedure

Preparation

The conductivity should be measured before the validation and the measured liquid parameters must be entered in the software. If the measured values differ from targeted values in the dipole document, the liquid composition should be adjusted. If the validation is performed with slightly different (measured) liquid parameters, the expected SAR will also be different. See the application note about SAR sensitivities for an estimate of possible SAR deviations. Note that the liquid parameters are temperature dependent with approximately – 0.5% decrease in permitivity and + 1% increase in conductivity for a temperature decrease of 1° C. The dipole must be placed beneath the flat phantom section of the Generic Twin Phantom with the correct distance holder in place. The distance holder should touch the phantom surface with a light pressure at the reference marking (little hole) and be oriented parallel to the long side of the phantom. Accurate positioning is not necessary, since the system will search for the peak SAR location, except that the dipole arms should be parallel to the surface. The device holder for mobile phones can be left in place but should be rotated away from the dipole. The forward power into the dipole at the dipole SMA connector should be determined as accurately as possible. See section 4 for a description of the recommended setup to measure the dipole input power. The actual dipole input power level can be between 20mW and several watts. The result can later be normalized to any power level. It is strongly recommended to note the actually used power

level in the „comment“-window of the measurement file; otherwise you loose this crucial information for later reference.

Validation

The DASY3 installation includes predefined files with recommended procedures for measurements and validation. They are read-only document files and destined as fully defined but unmeasured masks, so you must save the finished validation under a different name. The validation document requires the Generic Twin Phantom, so this phantom must be properly installed in your system. (You can create your own measurement procedures by opening a new document or editing an existing document file). Before you start the validation, you just have to tell the system with which components (probe, medium, and device) you are performing the validation; the system will take care of all parameters. After the validation, which will take about 20 minutes, the results of each task are displayed in the document window. Selecting all measured tasks and opening the predefined “validation” graphic format displays all necessary information for validation. A description of the different measurement tasks in the predefined document is given below, together with the information that can be deduced from their results:

- The „reference“ and „drift“ measurements are located at the beginning and end of the batch process. They measure the field drift at one single point in the liquid over the complete procedure. The indicated drift is mainly the variation of the amplifier output power. If it is too high (above ± 0.1dB) the validation should be repeated; some amplifiers have very high drift during warm-up. A stable amplifier gives drift results in the DASY3 system below ± 0.02 dB.

- The „surface check“ measurement tests the optical surface detection system of the DASY3 system by repeatedly detecting the surface with the optical and mechanical surface detector and comparing the results. The output gives the detecting heights of both systems, the difference between the two systems and the standard deviation of the detection repeatability. Air bubbles or refraction in the liquid due to separation of the sugar-water mixture gives poor repeatability (above ± 0.1mm). In that case it is better to abort the validation and stir the liquid. The difference between the optical surface detection and the actual surface depends on the probe and is specified with each probe. (It does not depend on the surface reflectivity or the probe angle to the surface within ± 30°.) However, varying breaking indices of different liquid compositions might also influence the distance. If the indicated difference varies from the actual setting, the probe parameter „optical surface distance“ should be changed in the probe settings (see manual). For more information see the application note about SAR evaluation.

- The „coarse scan“ measures the SAR above the dipole on a parallel plane to the surface. It is used to locate the approximate location of the peak SAR with 2D spline interpolation. The proposed scan uses large grid spacing for faster measurement; due to the symmetric field the peak detection is reliable. If a finer graphic is desired, the grid spacing can be reduced. Grid spacing and orientation have no influence on the SAR result.

- The two „cube 5x5x7“ scans measure the field in a volume around the peak SAR value assessed in the previous „coarse“ scan (for more information see the application note on SAR evaluation). Between the two cube scans the probe is rotated 90° around its axis. This allows checking and compensation of the probe isotropy error. In the document, the evaluated peak 1g and 10g averaged SAR values are shown. In the graphic, the mean values and the relative differences between the two cube scans are given for the extrapolated peak value and the 1g and 10g spatial peak values. If the difference between the cubes is larger than the expected isotropy from the probe document (and the power drift measurement is OK), there may be a problem with the parameter settings of the probe (e.g. wrong probe selected) or with the probe itself. The penetration depth is assessed from an exponential curve fitting on the z-axis in the center of the

cube. Since the decay is not purely exponential, the values in parentheses give the decay near the surface and further inside the phantom. If these values differ greatly from the values in the dipole document, either the dipole distance or the actual liquid parameters are different to the ones used in the document.

If the validation measurements give reasonable results, the peak 1g and 10g spatial SAR values averaged between the two cubes and normalized to 1W dipole input power give the reference data for comparisons. The next section analyzes the expected uncertainties of these values. Section 6 describes some additional checks for further information or troubleshooting.

Validation uncertainty

This section describes the expected deviation of the 1g and 10g validation results with respect to the correct values (absolute uncertainty), to validation results from other laboratories (interlaboratory comparisons) and to earlier results from the same laboratory and setup (repeatability). The uncertainty evaluation includes factors outside of the actual measurement system (conductivity measurement, source power determination and laboratory reflections). Since the uncertainty of these factors depends on the actual equipment and setup at the user location, estimated uncertainty values are given for a typical setup and a state-of-the-art setup. The typical setup assumes the HP dielectric probe kit for conductivity measurements and a simple power setting without directional coupler. The state-of-the-art setup assumes slotted coaxial lines for conductivity measurements and a power setting according to section 4. Section 5 describes the influence and reduction of laboratory reflections. It is assumed that the results of the liquid parameter assessment give the targeted values from the dipole document. All errors are given in percent of SAR, so 0.1dB corresponds to 2.3%. The field error would be half of that.

Absolute uncertainty

The table gives the absolute measurement uncertainty with respect to the correct SAR value in a perfect setup. This uncertainty is smaller than the expected uncertainty for mobile phone measurements due to the simplified setup and the symmetric field distribution.

	Error	Error Distribution	SAR Error Std. Dev.	
			Typical setup	State-of-the-art setup
Probe isotropy			± 0.5 %	=
Probe linearity	± 0.1 dB	rectangular	± 1.4 %	=
Probe calibration	± 3.3 %	normal	± 3.3 %	=
Electronics	± 1 %	rectangular	± 0.6 %	=
Drift	± 1 %	normal	± 1 %	=
1g peak SAR evaluation	± 3 %	normal	± 3 %	=
Source to liquid separation	± 0.1 mm	rectangular	± 0.6 %	=
Liquid conductivity	± 5 %	rectangular	± 2.9 %	± 1.5 %
Source power	± 0.2 dB	normal	± 4.8 %	± 2.4 %
Laboratory reflections	± 3 %	normal	± 3 %	± 1 %
Total	K=1		± 8 %	± 5.75 %
Total expanded uncertainty	K=2		± 16 %	± 11.5 %

The probe isotropy is practically cancelled out because the field is normal to the probe axis and the SAR is averaged between two 90° rotated cube measurements.

Deviation in interlaboratory comparisons

Since the correct value is not accessible directly, the validation results must be compared to some other measured values. For comparisons between completely different measurement systems, the absolute errors of both systems must be combined (RSS) for the estimated deviation in their results. If two DASY3 systems are compared, some intrinsic system errors are (partially) cancelled out (e.g. evaluation routine errors or calibration errors). The following table gives the estimated deviation of each system for interlaboratory comparisons.

	Deviations	Deviations Distribution	SAR Std. Div.	
			Typical setup	State-of-the-art setup
Probe isotropy			± 0.5 %	=
Probe linearity	± 0.1 dB	rectangular	± 1.4 %	=
Probe calibration	± 2 %	normal	± 2 %	=
Electronic	± 1 %	rectangular	± 0.6 %	=
Drift	± 1 %	normal	± 1 %	=
1g peak SAR evaluation	± 0.6 %	normal	± 0.6 %	=
Source to liquid separation	± 0.1 mm	rectangular	± 0.6 %	=
Dipole variations	± 1 %	normal	± 1 %	=
Liquid conductivity	± 5 %	rectangular	± 2.9 %	± 1.5 %
Source power	± 0.2 dB	normal	± 4.8 %	± 2.4 %
Laboratory reflections	± 3 %	normal	± 3 %	± 1 %
Total deviations	K=1		± 7 %	± 4.25 %
Total expanded deviations	K=2		± 14 %	± 8.5 %
Comparison betw. DASY3 labs	K=2		± 20 %	± 12.0 %

The results of the SAR measurements performed at the ETH Zurich using state of the art methods for power and conductivity measurements are included with each validation dipole. The total deviation (K=1) of these data for interlaboratory comparison is ± 4 %. The differences between different dipole units of the same type are small, so it is not necessary to exchange the dipoles to compare the results. As the table indicates, the main differences in laboratory intercomparisons are due to external factors like conductivity measurements, power settings and the laboratory setup. For good results it is important that the power setting system on both sides is state-of-the-art (see section 4) and that the laboratory setup minimizes reflections from nearby objects. During the system installation, the validation is compared with the ETH results (often also with liquid delivered from and measured at SPEAG) to check for deviations due to laboratory reflections. Typically, deviations within ± 5 % from the ETH value can be reached.

Validation repeatability

The repeatability check of the validation is insensitive to external effects and gives an indication of the variations in the DASY3 measurement system, provided that the same power reading setup is used for all validations. The repeatability estimate is given in the following table:

	Repeatab.	Repeatab. Distribution	SAR Std. Dev.	
			Typical setup	State-of-the-art setup
Probe isotropy			± 0 %	=
Probe linearity	± 0.1 dB	rectangular	± 0 %	=
Probe calibration	± 2 %	normal	± 0 %	=
Electronics	± 1 %	rectangular	± 0 %	=
Drift	± 1 %	normal	± 1 %	=
1g peak SAR evaluation	± 0.6 %	normal	± 0.6 %	=
Source to liquid separation	± 0.05 mm	rectangular	± 0.3 %	=
Dipole variations	± 0 %	normal	± 0 %	=
Liquid conductivity	± 5 %	rectangular	± 2.9 %	± 1.5 %
Source power repeatability	± 0.2 dB	normal	± 2 %	± 1 %
Laboratory reflections	± 3 %	normal	± 0 %	± 0 %
Total repeatability	K=1		± 3.75 %	± 2.25 %
Total extended repeatab.	K=2		± 7 %	± 4.5 %

The expected repeatability deviation is low. If the liquid is stable, the short time repeatability should be around ± 1.5% (K=1). Excessive drift (e.g. drift in liquid parameters), partial system failures or incorrect parameter settings (e.g. wrong probe or device settings) will lead to unexpectedly high repeatability deviations. While the interlaboratory comparison gives an indication of the system performance at the initial setup or after changes in the setup, the repeatability gives an indication that the system operates within its initial specifications. Excessive drift, system failure and operator errors are easily detected.

Power set-up for validation

The uncertainty of the dipole input power is a significant contribution to the absolute uncertainty and the expected deviation in interlaboratory comparisons. The values in Section 2 for a typical and a sophisticated setup are just average values. Refer to the manual of the power meter and the detector head for the evaluation of the uncertainty in your system. The uncertainty also depends on the source matching and the general setup. Below follows the description of a recommended setup and procedures to increase the accuracy of the power reading:

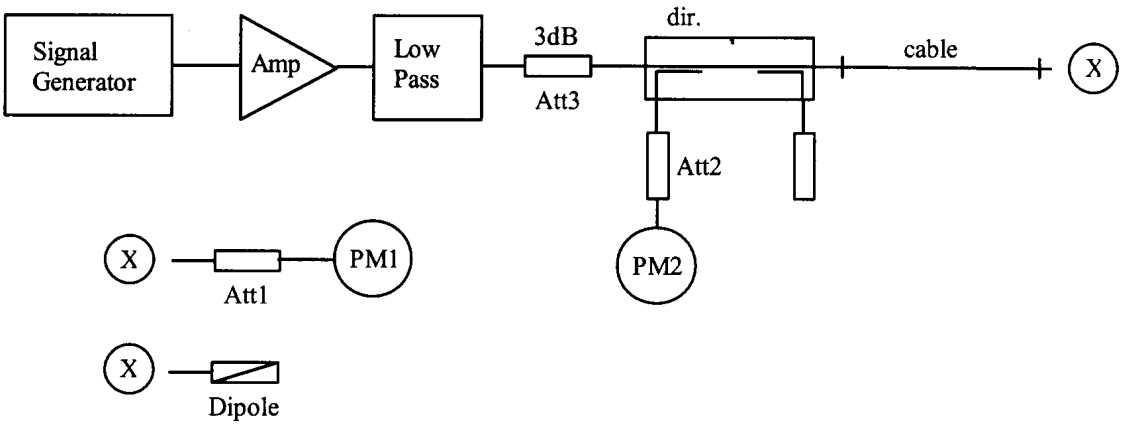

The figure shows the recommended setup. The PM1 (incl. Att1) measures the forward power at the location of the validation dipole connector. The signal generator is adjusted for the desired forward power at the dipole connector and the power meter PM2 is read at that level. After connecting the cable to the dipole, the signal generator is readjusted for the same reading at power meter PM2. If the signal generator does not allow a setting in 0.01dB steps, the remaining difference at PM2 must be noted and considered in the normalization of the validation results. The requirements for the components are:

- The signal generator and amplifier should be stable (after warm-up). The forward power to the dipole should be above 10mW to avoid the influence of measurement noise. If the signal generator can deliver 15dBm or more, an amplifier is not necessary. Some high power amplifiers should not be operated at a level far below their maximum output power level (e.g. a 100W power amplifier operated at 250mW output can be quite noisy). An attenuator between the signal generator and amplifier is recommended to protect the amplifier input.
- The low pass filter after the amplifier reduces the effect of harmonics and noise from the amplifier. For most amplifiers in normal operation the filter is not necessary.
- The attenuator after the amplifier improves the source matching and the accuracy of the power head. (See power meter manual.) It can also be used also to make the amplifier operate at its optimal output level for noise and stability. In a setup without directional coupler, this attenuator should be at least 10dB.
- The directional coupler (recommended ³ 20dB) is used to monitor the forward power and adjust the signal generator output for constant forward power. A medium quality coupler is sufficient because the loads (dipole and power head) are well matched. (If the setup is used for reflective loads, a high quality coupler with respect to directivity and output matching is necessary to avoid additional errors.)
- The power meter PM2 should have a low drift and a resolution of 0.01dBm, but otherwise its accuracy has no impact on the power setting. Calibration is not required.
- The cable between the coupler and dipole must be of high quality, without large attenuation and phase changes when it is moved. Otherwise, the power meter head PM1 should be brought to the location of the dipole for measuring.
- The power meter PM1 and attenuator Att1 must be high quality components. They should be calibrated, preferably together. The attenuator (³10dB) improves the accuracy of the power reading. (Some higher power heads come with a built-in calibrated attenuator.) The exact

attenuation of the attenuator at the frequency used must be known; many attenuators are up to 0.2dB off from the specified value.

- Use the same power level for the power setup with power meter PM1 as for the actual measurement to avoid linearity and range switching errors in the power meter PM2. If the validation is performed at various power levels, do the power setting procedure at each level.
- The dipole must be connected directly to the cable at location “X”. If the power meter has a different connector system, use high quality couplers. Preferably, use the couplers at the attenuator Att1 and calibrate the attenuator with the coupler.
- Always remember: We are measuring power, so 1% is equivalent to 0.04dB.

Laboratory reflections

In near-field situations, the absorption is predominantly caused by induction effects from the magnetic near-field. The absorption from reflected fields in the laboratory is negligible. On the other hand, the magnetic field around the dipole depends on the currents and therefore on the feedpoint impedance. The feedpoint impedance of the dipole is mainly determined from the proximity of the absorbing phantom, but reflections in the laboratory can change the impedance slightly. A 1% increase in the real part of the feedpoint impedance will produce approximately a 1% decrease in the SAR for the same forward power. The possible influence of laboratory reflections should be investigated during installation. The validation setup is suitable for this check, since the validation is sensitive to laboratory reflections. The same tests can be performed with a mobile phone, but most phones are less sensitive to reflections due to the shorter distance to the phantom. The fastest way to check for reflection effects is to position the probe in the phantom above the feedpoint and start a continuous field measurement in the DASY3 multimeter window. Placing absorbers in front of possible reflectors (e.g. on the ground near the dipole or in front of a metallic robot socket) will reveal their influence immediately. A 10dB absorber (e.g. ferrite tiles or flat absorber mats) is probably sufficient, as the influence of the reflections is small anyway. If you place the absorber too near the dipole, the absorber itself will interact with the reactive near-field. Instead of measuring the SAR, it is also possible to monitor the dipole impedance with a network analyzer for reflection effects. The network analyzer must be calibrated at the SMA connector and the electrical delay (two times the forward delay in the dipole document) must be set in the NWA for comparisons with the reflection data in the dipole document. If the absorber has a significant influence on the results, the absorber should be left in place for validation or measurements. The reference data in the dipole document are produced in a low reflection environment.

Additional system checks

While the validation gives a good check of the DASY3 system components, it does not include all parameters necessary for real phone measurements (e.g. device modulation or device positioning). For system validation (repeatability) or comparisons between laboratories a reference device can be useful. This can be any mobile phone with a stable output power (preferably a device whose output power can be set through the keyboard). For comparisons, the same device should be sent around, since the SAR variations between samples can be large. Several measurement possibilities in the DASY software allow additional tests of the performance of the DASY system and components. These tests can be useful to localize component failures:

- The validation can be performed at different power levels to check the noise level or the correct compensation of the diode compression in the probe.

- If a pulsed signal with high peak power levels is fed to the dipole, the performance of the diode compression compensation can be tested. The correct crest factor parameter in the DASY software must be set (see manual). The system should give the same SAR output for the same averaged input power.

- The probe isotropy can be checked with a 1D-probe rotation scan above the feedpoint. The automatic probe alignment procedure must be passed through for accurate probe rotation movements (optional DASY3 feature with a robot-mounted light beam unit). Otherwise the probe tip might move on a small circle during rotation, producing some additional isotropy errors in gradient fields.

Appendix 7: Application Note Spatial Peak SAR Evaluation

The spatial peak SAR - value for 1 and 10 g is evaluated after the Cube measurements have been done. The basis of the evaluation are the SAR values measured at the points of the fine cube grid consisting of 4 x 4 x 7 or 5 x 5 x 7 points. If you change any parameter afterwards with 'File Modify' (for example crest factor or medium factors) you will have to reevaluate the measurements. This evaluation can be repeated, if you press Job Evaluation on the selected scans. The algorithm that finds the maximal averaged volume is divided into three different stages.

- The data between the dipole center of the probe and the surface of the phantom is extrapolated. This data cannot be measured, since the center of the dipoles is 2.7 mm away form the tip of the probe and the distance between the surface and the lowest measuring point is ca 1 mm (see probe calibration sheet). You can visualize the extrapolated data from a cube measurement if you select Graph Evaluated.
- The maximal interpolated value is searched with a straight-forward algorithm. Around this maximum the SAR - values averaged over the spatial volumes (1g or 10 g) are computed using the 3d-spline interpolation algorithm. If the volume cannot be evaluated (i.e., if a part of the grid was cut off by the boundary of the measurement area) the evaluation will be started on the corners of the bottom plane of the cube.
- All neighboring volumes are evaluated until no neighboring volume with a higher average value is found.

Extrapolation

The extrapolation is based on a least square algorithm [W. Gander, Computermathematik, p.168-180]. Through the points in the first 3 cm in all z-axis, polynomials of order four are calculated. This polynomial is then used to evaluate the points between the surface and the probe tip. The points, calculated from the surface, have a distance of 1 mm from one another.

Interpolation

The interpolation of the points is done with a 3d-Spline. The 3d-Spline is composed of three one-dimensional splines with the "Not a knot"-condition [W. Gander, Computermathematik, p.141-150] (x, y and z -direction) [Numerical Recipes in C, Second Edition, p.123ff].

Volume Averaging

Firstly the size of the cube is calculated. The volume is integrated with the trapezoidal algorithm. 8000 points (20x20x20) are interpolated to calculate the average.

Advanced Extrapolation

The BIOEMC group of the ETH Zurich is currently investigating the boundary effects on E-field probes. As soon as the research is finished DASY3 will allow to compensate for these boundary effects. But until then we do not encourage to use the 'Advanced Extrapolation' option.

Appendix 8: Data Storage and Evaluation

Data Storage

The DASY3 software stores the assessed data from the data acquisition electronics are as raw data (in microvolt readings from the probe sensors), together with all the necessary software parameters for the data evaluation (probe calibration data, liquid parameters and device frequency and modulation data) in measurement files with the extension ".DA3". The Software evaluates the desired unit and format for output each time the data is visualized or exported. This allows verification of the complete software setup even after the measurement and allows correction of erroneous parameter settings. For example, if a measurement has been performed with an incorrect crest factor parameter in the device setup, the parameter can be corrected afterwards and the data can be reevaluated. To avoid unintentional parameter changes or data manipulations, the parameters in measured files are locked. In the administrator access mode of the software, the parameters can be unlocked by selecting the "modify"-switch in the "file"-pull down menu. After changing the parameters, the measured scans must be reevaluated by selecting them and using the "evaluate"-option in the "scan"-pull down menu.

The measured data can be visualized or exported in different units or formats, depending on the selected probe type ([V/m], [A/m], [°C], [mW/g], [mW/cm²], [dBrel], etc.). Some of these units are not available in certain situations or give meaningless results, e.g., a SAR output in a lossless media will always be zero. Raw data can also be exported to perform the evaluation with other software packages.

Data Evaluation

The DASY3 software automatically executes the following procedures to calculate the field units from the microvolt readings at the probe connector. The parameters used in the evaluation are stored in the configuration modules of the software:

Probe parameters:	- Sensitivity	Normi, ai0, ai1, ai2
	- Conversion factor	ConvFi
	- Diode compression point	Dcpi
Device parameters:	- Frequency	f
	- Crest factor	cf
Media parameters:	- Conductivity	–
	- Density	–

These parameters must be set correctly in the software. They can be found in the component documents or they can be imported into the software from the configuration files issued for the DASY3 components. In the direct measuring mode of the multimeter option, the parameters of the actual system setup are used. In the scan visualization and export modes, the parameters stored in the corresponding document files are used.

The first step of the evaluation is a linearization of the filtered input signal to account for the compression characteristics of the detector diode. The compensation depends on the input signal, the diode type and the DC-transmission factor from the diode to the evaluation electronics.

If the exciting field is pulsed, the crest factor of the signal must be known to correctly compensate for peak power. The formula for each channel can be given as:

$$V_i = U_i + U_i^2 \cdot cf/dcp_i$$

with	Vi	= compensated signal of channel i	(i = x, y, z)
	Ui	= input signal of channel i	(i = x, y, z)
	cf	= crest factor of exciting field	(DASY parameter)
	dcpi	= diode compression point	(DASY parameter)

From the compensated input signals the primary field data for each channel can be evaluated:

E-field probes: $E_i = (V_i / Norm_i \cdot ConvF)^{1/2}$

H-field probes: $H_i = (V_i)^{1/2} \cdot (a_{i0} + a_{i1}f + a_{i2}f^2)/f$

with	Vi	= compensated signal of channel i	(i = x, y, z)
	Normi	= sensor sensitivity of channel i ? ? mV/(V/m)^2 for E-field Probes	(i = x, y, z)
	ConvF	= sensitivity enhancement in solution	
	aij	= sensor sensitivity factors for H-field probes	
	f	= carrier frequency [GHz]	
	Ei	= electric field strength of channel i in V/m	
	Hi	= magnetic field strength of channel i in A/m	

The RSS value of the field components gives the total field strength (Hermitian magnitude):

$$E_{tot} = (E_x^2 + E_Y^2 + E_z^2)^{1/2}$$

The primary field data are used to calculate the derived field units.

$$SAR = (E_{tot}^2 \cdot ?) / (? \cdot 1000)$$

with	SAR	= local specific absorption rate in mW/g
	Etot	= total field strength in V/m
	s	= conductivity in [mho/m] or [Siemens/m]
	r	= equivalent tissue density in g/cm^3

Note that the density is normally set to 1 (or 1.06), to account for actual brain density rather than the density of the simulation liquid.The power flow density is calculated assuming the excitation field to be a free space field.

$$P_{pwe} = E_{tot}^2 / 3770 \qquad \text{or} \qquad P_{pwe} = H_{tot}^2 \cdot 37.7$$

with	Ppwe	= equivalent power density of a plane wave in mW/cm2
	Etot	= total electric field strength in V/m
	Htot	= total magnetic field strength in A/m

Appendix 9: System Description

System Description

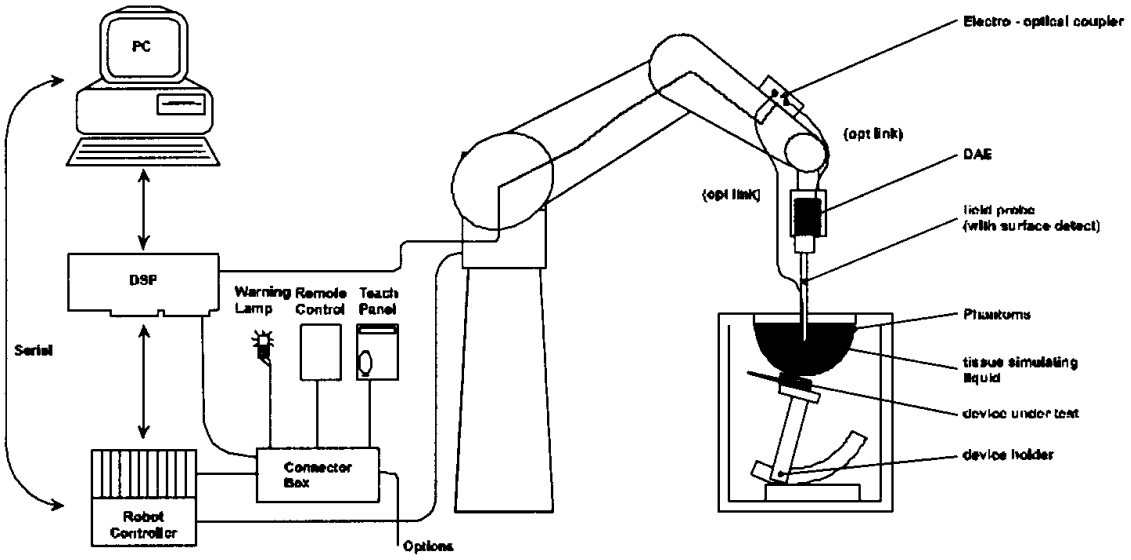

The DASY3 system for performing compliance tests consist of the following items:

- A standard high precision 6-axis robot (Stäubli RX family) with controller and software. An arm extension for accommodating the data acquisition electronics (DAE).
- A dosimetric probe, i.e., an isotropic E-field probe optimized and calibrated for usage in tissue simulating liquid. The probe is equipped with an optical surface detector system.
- A data acquisition electronic (DAE) which performs the signal amplification, signal multiplexing, AD-conversion, offset measurements, mechanical surface detection, collision detection, etc. The unit is battery powered with standard or rechargeable batteries. The signal is optically transmitted to the EOC.
- An unit to operate the optical surface detector which is connected to the EOC.
- The Electro-optical coupler (EOC) performs the conversion from the optical into a digital electric signal of the DAE. The EOC is connected to the PC plug-in card.
- The functions of the PC plug-in card based on a DSP is to perform the time critical task such as signal filtering, surveillance of the robot operation fast movement interrupts.
- A computer operating Windows 95 or larger
- DASY3 software
- Remote control with teach pendant and additional circuitry for robot safety such as warning lamps, etc.

- The generic twin phantom enabling testing left-hand and right-hand usage.
- The device holder for handheld mobile phones.
- Tissue simulating liquid mixed according to the given recipes (see Application Note).
- System validation dipoles allowing to validate the proper functioning of the system.

Options:

- Isotropic E-field probe optimized and calibrated for E-field measurements in free space
- Isotropic H-field probe optimized and calibrated for H-field measurements in any nonmagnetic media
- A probe alignment unit which improves the (absolute) accuracy of the probe positioning (necessary for probe calibration).
- Whole-Body Phantom (only for body-mounted transceivers operating below 400 MHz)

Additional utilities for SAR-measurements not provided by SPEAG:

- System to operate the device in a defined mode. For compliance testing, no cable should be attached. This is usually accomplished with a tester communication with an air link or by special device software.
- System to measure the dielectric properties of the tissue simulating liquids. For the time being we recommend the usage of the HP 85070 dielectric probe kit. An alternative is the slotted coaxial line method. Both methods require a network analyzer (average usage 5-10 minutes a week).
- Signal generator, amplifier, power meter (precision <0.1dB), coupler and cable in order to perform the validation. A power level of larger then 14 dBm is required (preferable 20-25 dBm).
- Utilities to prepare tissue simulating solution
  - Stirrer (Magneto-stirrer with heating plate is recommended)
  - Balance (1g accuracy, 500 to 2000g range)
  - Glass flask 3l to 10l for mixing liquid