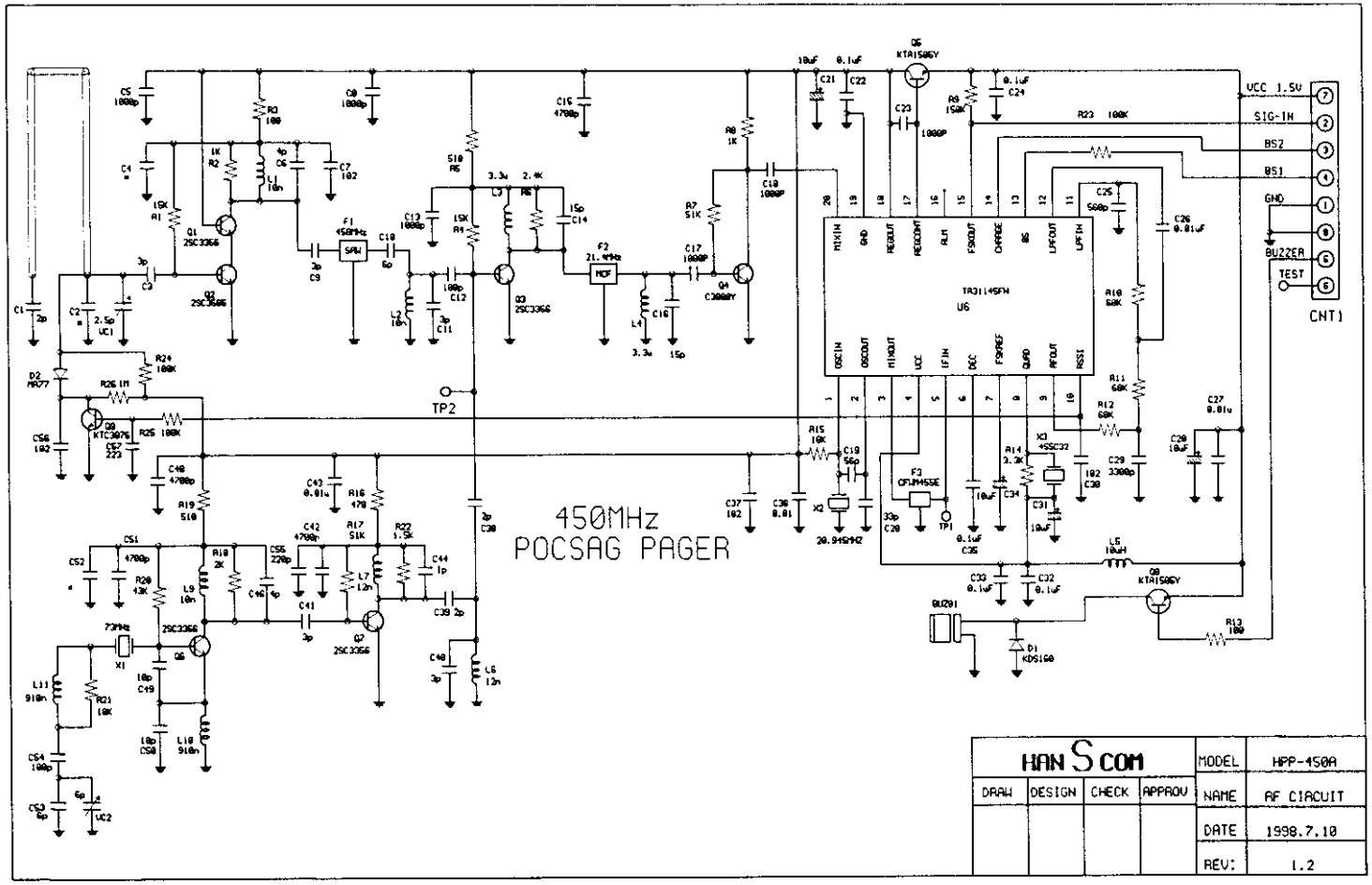
450MHz
POCSAG PAGER
TA31145FN
U6
CNT1
VCC 1.5V
SIG-IN
BS2
BS1
GND
BUZZER
TEST
TP2
TP1
20.945MHz
73MHz
450MHz
21.4MHz
HAN S COM
MODEL
HPP-450A
NAME
RF CIRCUIT
DATE
1998.7.10
REV:
1.2
DRAW
DESIGN
CHECK
APPROV

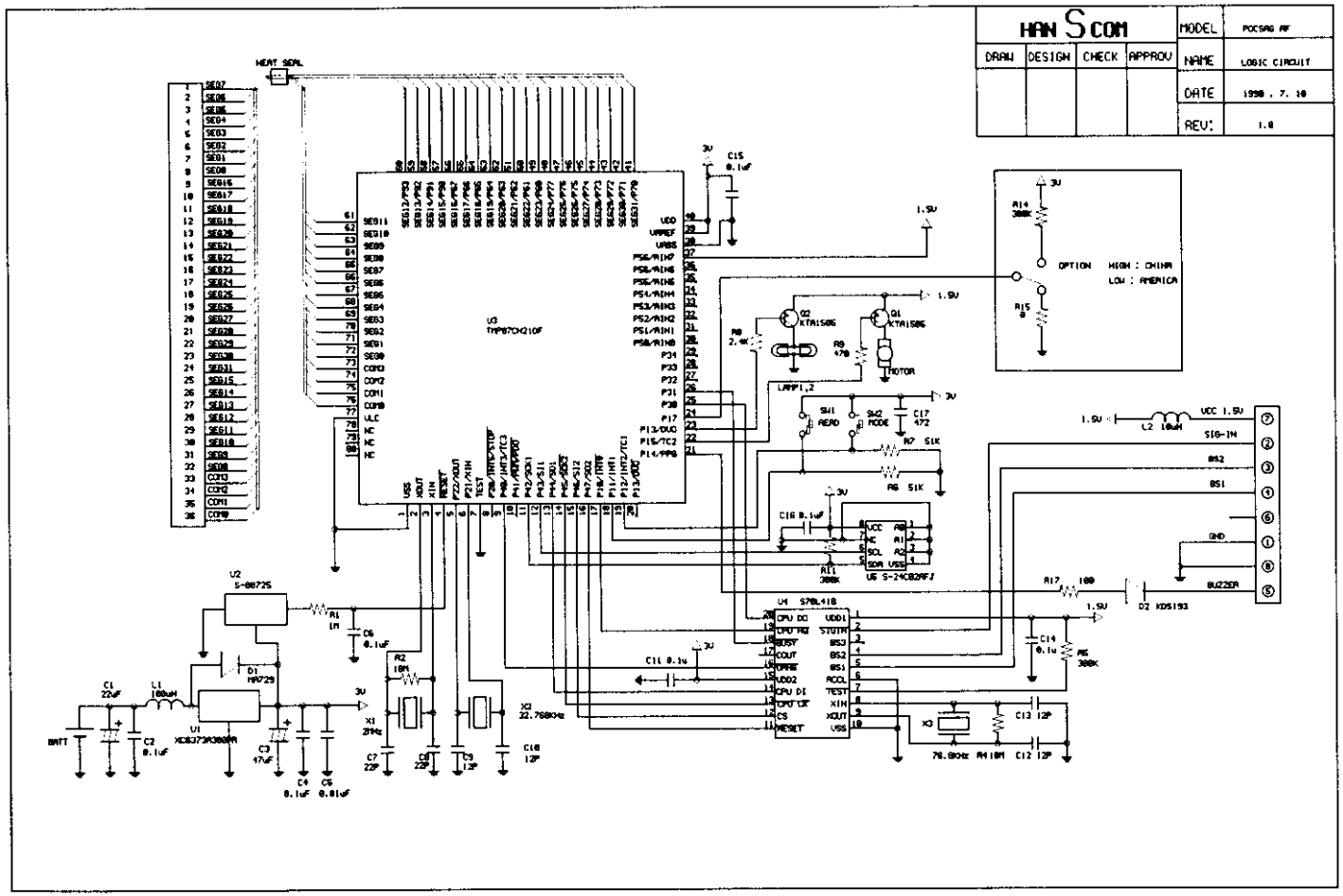
HAN S COM
DRAW
DESIGN
CHECK
APPROV
MODEL
POCSAG RF
NAME
LOGIC CIRCUIT
DATE
1998 . 7. 10
REV.
1.0
HEAT SEAL
U3
TMP87CH210F
OPTION
HIGH : CHINA
LOW : AMERICA
MOTOR
LAMP1,2
SW1 READ
SW2 MODE
U6 S-24C02AFJ
U4 S70L41B
U1 XC6373A300MR
U2 S-8072S
BUZZER
D2 KDS193
X2 32.768KHz
X3 76.80KHz
BATT
VCC 1.5V
SIG-IN
BS2
BS1
GND