FlexWave Spectrum Remote Access Unit

Installation Guide

TECP-77-222 · Issue 3 · March 2015

This guide provides installation instructions for TE Connectivity FlexWave Spectrum Remote Access Units (RAUs).

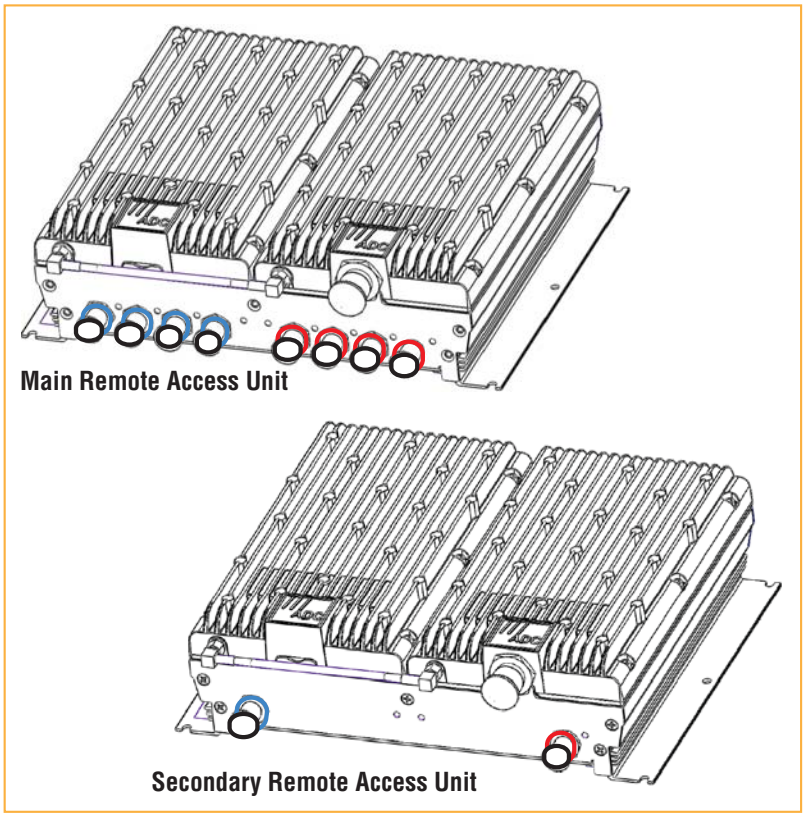

TE Connectivity, TE and TE connectivity (logo) FlexWave, InterReach, InterReach Fusion and InterReach Unison are trademarks.

All other logos, products and/or company names referred to herein might be trademarks of their respective owners.

The information given herein, including drawings, illustrations and schematics which are intended for illustration purposes only, is believed to be reliable. However, TE Connectivity makes no warranties as to its accuracy or completeness and disclaims any liability in connection with its use. TE Connectivity's obligations shall only be as set forth in TE Connectivity's Standard Terms and Conditions of Sale for this product and in no case will TE Connectivity be liable for any incidental, indirect or consequential damages arising out of the sale, resale, use or misuse of the product. Users of TE Connectivity products should make their own evaluation to determine the suitability of each such product for the specific application.

Table of Contents

Document Overview **3**
- Revision History 3
- Document Cautions and Notes 4
- Abbreviations Used in this Guide 4

Product Overview **5**
- Main Remote Access Units 7
  - MRAU Ports, Cable, and Connectors 7
  - MRAU LEDs 8
- Secondary Remote Access Units 9
  - SRAU Ports, Cable, and Connectors 9
  - SRAU LEDs 10
- RAU N Connectors 11

Install the RAUs and Antennas **12**
- Mount the RAUs and Antennas 12
- Connect the IFEU to the MRAU 13
- Connect the MRAU to SRAUs 14
- Configure the MRAUs and SRAUs 16

Specifications **17**
- Remote Access Unit Specifications 17
- Spectrum System Specifications 17
  - RF Specification 17
  - Propagation Delay 17
  - Nominal Passband Bandwidths and Specifications 17
  - System Gain Examples 18
- Composite Power Out of RAU 19

75-Ohm CATV Cable Requirements and Specifications **22**
- CATV Cable Requirements 22
- Belden 1695A Coax Specifications 23
  - Description 23
  - Overall Physical Characteristics 23
  - Overall Nominal Electrical Characteristics 24
- Belden 7732A Coax Specifications 25
  - Description 25
  - Overall Physical Characteristics 25
  - Overall Nominal Electrical Characteristics 26

Omni Antenna Specifications **27**

Standards Certification **28**

Accessing User Documentation on the TE Customer Portal **30**

Contacting TE Connectivity **31**

©2015 TE Connectivity

Document Overview

Table 1 lists the Standard RAUs that are supported in this document.

Table 1. *Supported Spectrum Standard Remote Access Units*

Catalog Number	Description
Standard RAUs	
SPT-S1-7070-1-MIMO	Spectrum, 700 MIMO Secondary RAU, UpperC-LowerABC
SPT-S2-70AWS-1-SISO	Spectrum, 700 SISO-2100AWS Path 1 SEC RAU, UpperC-LowerABC
SPT-S2-70AWS-22-SISO	Spectrum, 700 Path 2 SISO-2100AWS Path 2 SEC RAU, UpperC-LowerABC
SPT-S1-8019-22*	Spectrum, 800 Path 2-1900 Path 2 Secondary RAU
SPT-S1-8090-1*	Spectrum, 800-900 SMR Secondary RAU
SPT-S1-80AWS-1*	Spectrum, 800-2100AWS Path 1 Secondary RAU
SPT-M1-8519-1	Spectrum, 850-1900 Main RAU
SPT-S1-8519-22	Spectrum, 850 Path 2-1900 Path 2 Secondary RAU
SPT-S1-2121-1-MIMO	Spectrum, 2100AWS MIMO Secondary RAU
SPT-M1-AWS19-11	Spectrum, 2100AWS Path 1-1900 Path 1 Main RAU
SPT-S1-AWS19-12	Spectrum, 2100AWS Path 1-1900 Path 2 Secondary RAU
High Power RAUs	
SPT-S3-70AWS-11-HP	Spectrum, 700 Path 1 uC/LABC-AWS HP Path 1 Secondary RAU
SPT-S3-70AWS-22-HP	Spectrum, 700 Path 2 uC/LABC-AWS HP Path 2 Secondary RAU
SPT-S3-8019-22-HP*	Spectrum, 800 Path 2-1900 HP Path 2 Secondary RAU
SPT-M3-8019-31-HP*	Spectrum, 800 Path 3 - 1900 HP Path 1 Main RAU
SPT-M3-8519-11-HP	Spectrum, 850 Path 1-1900 HP Path 1 Main RAU
SPT-S3-8519-22-HP	Spectrum, 850 Path 2 - 1900 HP Path 2 Secondary RAU
SPT-S3-2323-12-HP	FlexWave Spectrum, 2300 HPp1 - 2300 HPp2 Secondary RAU
SPT-S3-2626-12-HP	Spectrum, 2600HP Path 1 - 2600HP Path 2 Secondary RAU
* This RAU is Class B Signal Booster; see "Part 90 Signal Boosters" on page 28.	

Revision History

Issue	Document Date	Technical Updates
1	February 2013	Initial release.
2	August 2014	Added support for the 2600HP Path 1 - 2600HP Path 2 Secondary RAU, the 800 Path 3 - 1900 HP Path 1 Main RAU, and the Path 2-1900 HP Path 2 Secondary RAU; added torque data in "Connect the IFEU to the MRAU" on page 13 and "Connect the MRAU to SRAUs" on page 14.
3	March 2015	Adds support for 2300 HPp1 - 2300 HPp2 Secondary RAU.

©2015 TE Connectivity

Document Cautions and Notes

Two types of messages, identified below, appear in the text:

CAUTION! **Cautions indicate operations or steps that could cause personal injury, induce a safety problem in a managed device, destroy or corrupt information, or interrupt or stop services.**

NOTE: **Notes contain information about special circumstances.**

Abbreviations Used in this Guide

AWS	Advanced Wireless Services
CATV	Community Antenna Television
cm	Centimeter
CUL	Canadian Underwriters Laboratory
DART	Digital-Analog Radio Transceiver
dB	Decibel
DC	Direct Current
DRU	DART Remote Unit
F	Fahrenheit
FCC	Federal Communications Commission
FFEP	Foam Fluorinated Ethylene Propylene
Ft	Feet
FWD	Forward
HP	High Power
IC	Industry Canada
IF	Intermediate Frequency
IFEU	IF Expansion Unit
LTE	Long-Term Evolution
MHz	Megahertz
MIMO	Multiple-Input Multiple-Output
mm	Millimeter
MRAU	Main Remote Access Unit
RAU	Remote Access Unit
REV	Reverse
RF	Radio Frequency
SISO	Single-Input Single-Output
SMR	Specialized Mobile Radio
SRAU	Secondary Remote Access Unit
UL	Underwriters' Laboratories, Inc.
Vdc	Volts, direct current
WCS	Wireless Communications Service

©2015 TE Connectivity

Product Overview

Spectrum supports up to 8 bands in a single system. Each antenna location supports those bands in modular, group pairings. Each location includes a Main Remote Access Unit (MRAU) that can power up to three additional Secondary RAUs (SRAUs), each of which support two power amplifier pairs for a total of eight amplifiers. MRAUs and SRAUs are grouped logically based on common service provider groupings and include: 850/1900, 700/700 MIMO, 800/900 SMR, 700 SISO/AWS, and so forth (see Table 1 on page 3). Adding frequency is as simple as plugging in an SRAU to the existing MRAU (see Table 3 on page 19 through Table 5 on page 21 in "Specifications").

RAUs are available in two different output power options: Standard and High Power. These can be "mixed and matched" on a system to meet the specific needs of a venue.

Since Spectrum can be configured to support as many as four cascaded runs of sixteen total Expansion Module Groups, the system configuration possibilities are seemingly endless and can scale to single systems that include as many as 128 MRAU locations, with each of those locations supporting between one and eight RF bands. And each of those band locations offers 26 dBm (P1dB) or 31 dBm (P1dB) of output power based on selecting Standard or High Power (HP) RAUs.

The system may be scaled to add new bands or RAU location sites as-needed and offers great service flexibility and performance relative to shared, wide-band amplifier systems. Each service provider may control their band of interest and enjoy the predictability in consistent service at each RAU location independent of what other operators are doing or the length the signal travels to the service area.

The RAUs are typically mounted above ceiling tiles or in out-of-sight locations as close as possible to the service area.

©2015 TE Connectivity

Figure 1 illustrates how RF and IF signals are sent between Spectrum units and modules.

NOTE: **All FWD ports on all Modules are color-coded red and all REV ports are color-coded blue, which makes the DART Remote Unit (DRU), IFEU, and RAU cabling process easier to complete.**

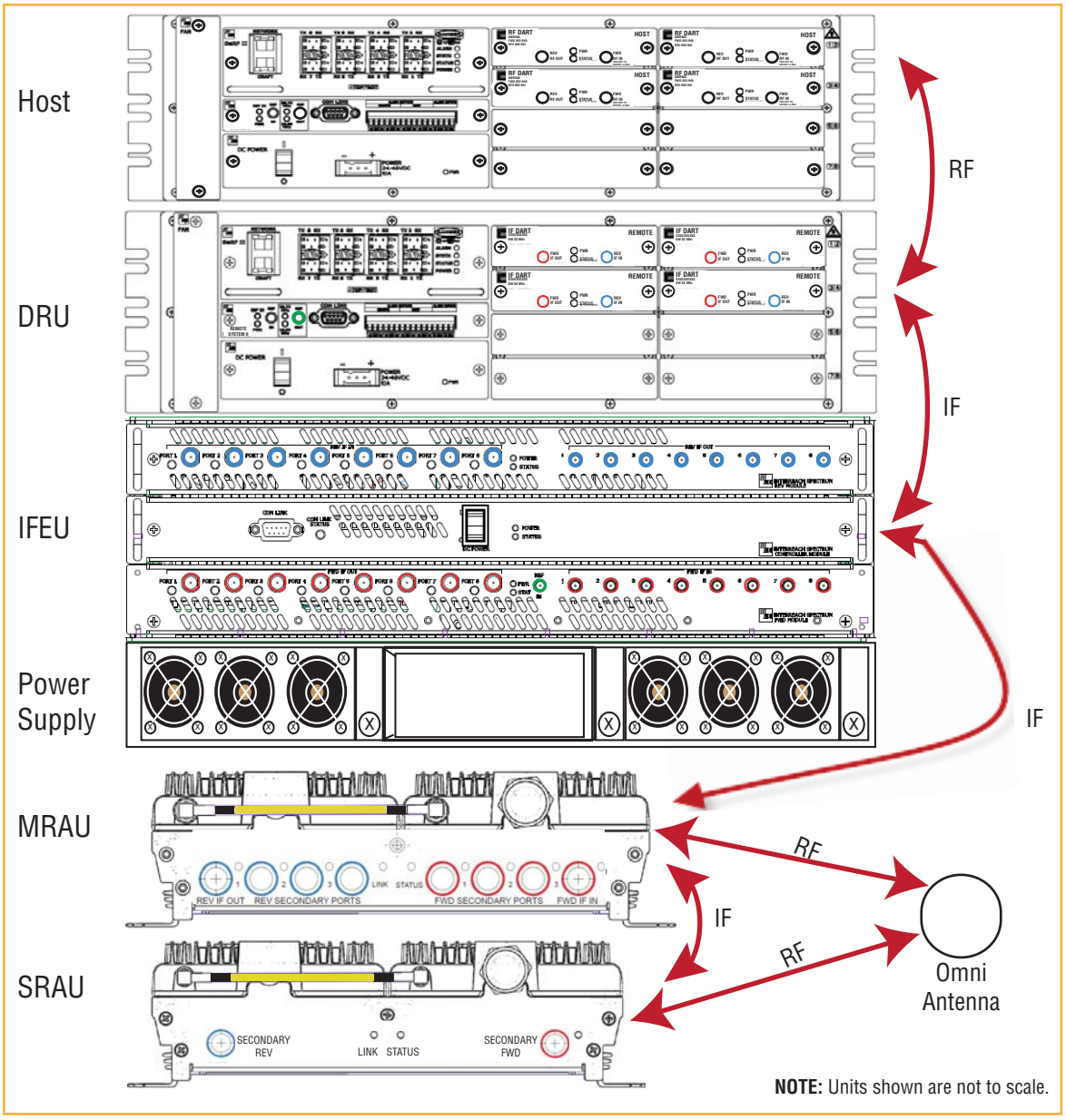

Figure 1. REV and FWD Signals for the RAU

NOTE: **This book refers to the Omni Antenna (4214-0727), which is the antenna that TE Connectivity recommends. Other antennas may be used. For further information on the Omni Antenna, see "Omni Antenna Specifications" on page 27.**

Main Remote Access Units

The Main Remote Access Unit (MRAU) receives FWD IF signals from an IF Expansion Unit (IFEU), which is part of the Spectrum Expansion Module Group, using 75Ω CATV cable. The MRAU converts the IF signals to RF and sends them to a passive RF antenna using 50Ω coaxial cable. The MRAU also receives configuration information and power from and sends its status information to the IFEU.

The MRAU receives REV RF signals from a passive RF antenna using 50Ω coaxial cable. It converts the signals to IF and sends them to the IFEU using 75Ω CATV cable.

MRAU Ports, Cable, and Connectors

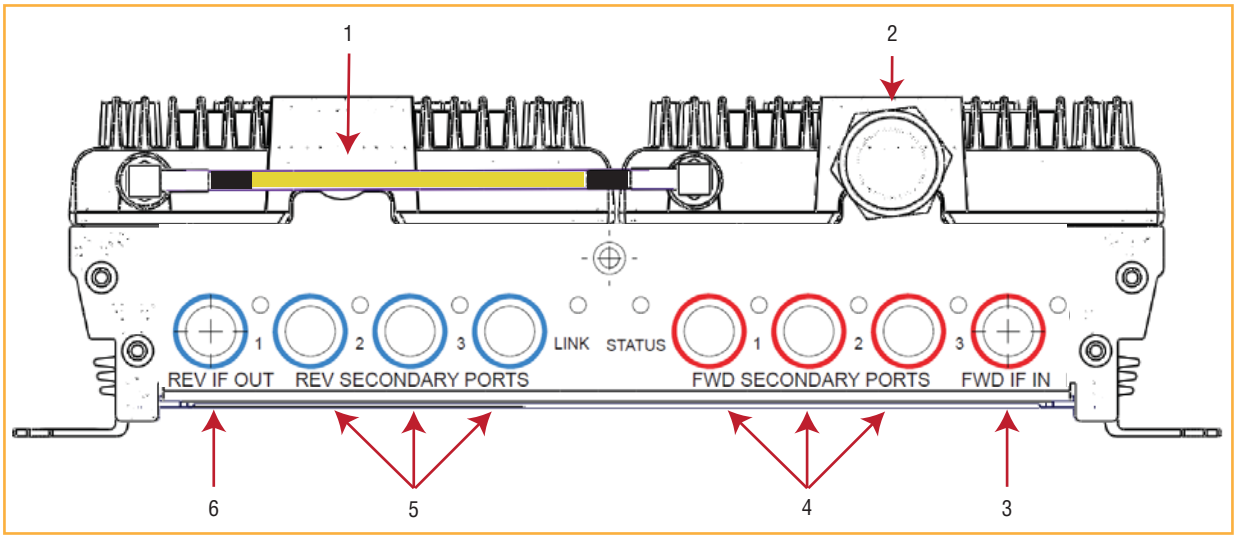

Ref #	Component	Device	Function
1	RF jumper cable to connect Band 1 to the diplexer on Band 2 RF module(1)	50Ω RF SMA-to-SMA cable (or 50Ω RF N-to-SMA cable)	Connects two RF bands together so there is only one N-type connector on the RAU to connect to an antenna.
2	Antenna port(s)	50Ω N-type connector	Connects to an antenna. See Table 2 on page 11.
3	FWD IF IN connector	F connector port	Connects to the IFEU FWD Module IF OUT connector via CATV cable.
4	FWD SECONDARY PORTS (1 - 3)	F connector ports	Connect to a SRAU SECONDARY FWD connector via CATV cable.
5	REV SECONDARY PORTS (1 - 3)	F connector ports	Connect to a SRAU SECONDARY REV connector via CATV cable.
6	REV IF OUT connector	F connector port	Connects to the IFEU REV Module IF IN connector via CATV cable.
(1) The AWS/PCS MRAUs do NOT have an RF SMA cable—they have two Antenna ports.			

©2015 TE Connectivity

MRAU LEDs

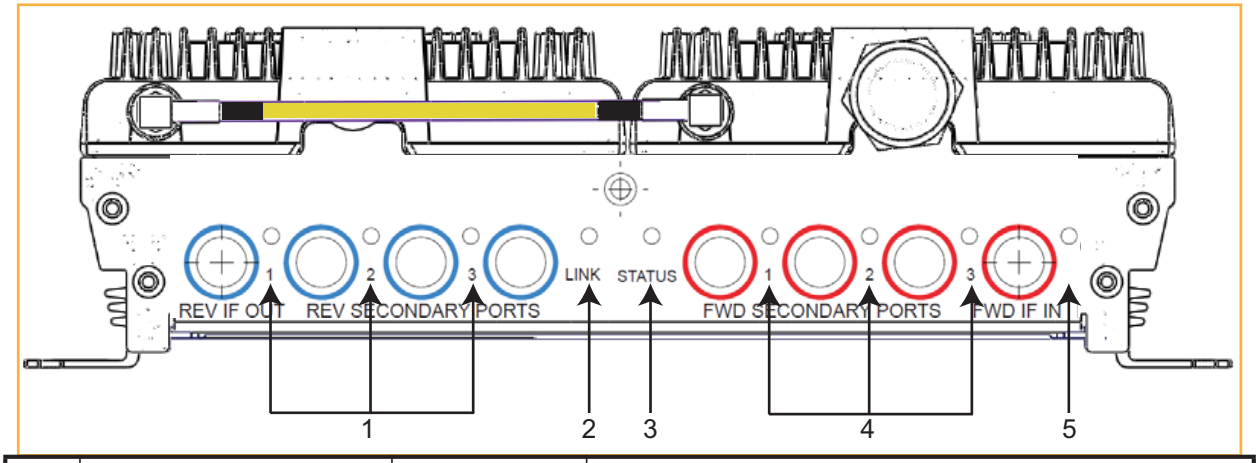

Ref #	LED	LED Color	Description
1	FWD SECONDARY PORT (1 - 3)	• Green • Blinking Green • Yellow • Blinking yellow • Red • Off	• Downstream unit correctly connected; unit has no alarms or a Minor alarm is active. • SRAU or band is set out-of-service. • FWD cable connected to SRAU, no REV cable connected. • FWD and REV cables are not connected to the same port number (incorrectly paired). • Major alarm in downstream unit, fault lockout, or SRAU disconnected. • No SRAU previously connected.
2	LINK	• Green • Red • Off	• MRAU receiving communications from the IFEU. • MRAU has not received communications from the IFEU for more than 90 seconds. • During initial power up, MRAU is powering up and waiting for IFEU communications.
3	STATUS	• Green • Blinking green • Red	• Unit has no alarms or a Minor alarm is active. • Unit or band is set out-of-service. • Major alarm detected.
4	REV SECONDARY PORT (1 - 3)	• Green • Blinking Green • Blinking Yellow • Red • Off	• Downstream unit correctly connected, unit has no alarms or minor alarm • SRAU or band is set out-of-service. • FWD and REV cables are not connected to the same port number (incorrectly paired). • Major alarm in downstream unit, fault lockout, or SRAU disconnected. • No SRAU previously connected.
5	FWD IF IN	• Green • Yellow or Blinking Yellow • Off	• MRAU is powered on correctly. • There is an IFEU FWD connection, but there is no IFEU REV connection or the IFEU REV connection is paired incorrectly. • Cable is not connected to the IFEU FWD port.

©2015 TE Connectivity

Secondary Remote Access Units

A Secondary Remote Access Unit (SRAU) receives FWD IF signals from the MRAU, using 75Ω CATV cable. The SRAU converts the IF signals to RF and sends them to a passive RF antenna using 50Ω coaxial cable. The SRAU, through the MRAU, also receives configuration information and power from and sends its status information to the IFEU.

The SRAU receives REV RF signals from a passive RF antenna using 50Ω coaxial cable. It converts the signals to IF and sends them to the MRAU using 75Ω CATV cable.

SRAU Ports, Cable, and Connectors

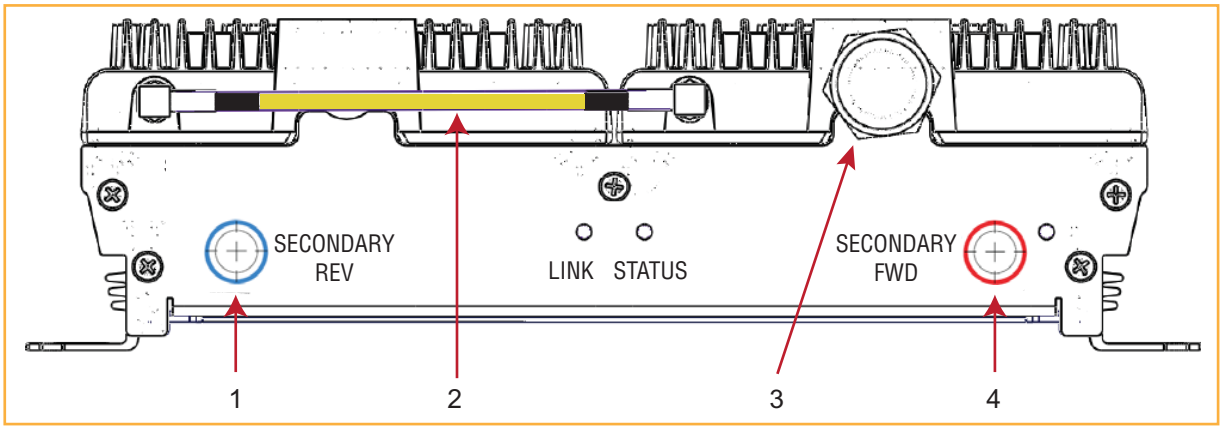

Ref #	Component	Device	Function
1	SECONDARY REV connector	F connector port	Connects to one of the MRAU REV SECONDARY ports (1 - 3) via CATV cable.
2	RF SMA cable (1)	50Ω RF SMA-to-SMA cable	Connects two RF bands together when there is only one N-type connector on the RAU. For cases when there is an N-type connector for each RF band (700MIMO or PCS/AWS), there will not be an SMA cable.
3	Antenna port(s)	50Ω N-type connector	Connects to an antenna. See Table 2 on page 11.
4	SECONDARY FWD connector	F connector port	Connects to one of the MRAU FWD SECONDARY ports (1 - 3) via CATV cable.
(1) The 700 MIMO SRAU does NOT have an RF SMA cable; it has two Antenna ports.			

©2015 TE Connectivity

SRAU LEDs

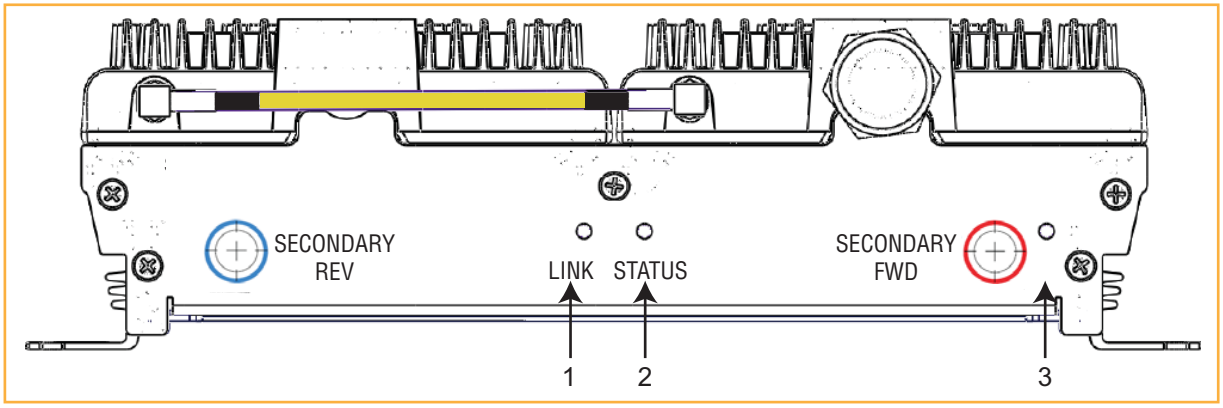

Ref #	LED	LED Color	Description
1	LINK	• Green • Red • Off	• SRAU receiving communications from the IFEU. • SRAU has not received communications from the IFEU for more than 90 seconds. • During initial power up, SRAU is powering up and waiting for IFEU communications.
2	STATUS	• Green • Blinking Green • Red	• Unit has no alarms or a Minor alarm is active. • Unit or band is set out-of-service. • Major alarm detected.
3	SECONDARY FWD	• Green • Yellow or Blinking Yellow • Off	• SRAU is powered on correctly. • There is an MRAU FWD connection, but there is no MRAU REV connection or the MRAU REV connection is paired incorrectly. • Cable is not connected to the MRAU FWD port.

RAU N Connectors

Each RAU also has one or two 50-Ω N-type connectors that connect to a passive antenna. Table 2 lists the number of N-type connectors available on each RAU model.

Table 2. *Number of N Connectors on RAUs*

Catalog Number	Description	Number of RF N Connectors*
Standard RAUs		
SPT-S1-7070-1-MIMO	Spectrum, 700 MIMO Secondary RAU, UpperC-LowerABC	2
SPT-S2-70AWS-1-SISO	Spectrum, 700 SISO-2100AWS Path 1 SEC RAU, UpperC-LowerABC	1
SPT-S2-70AWS-22-SISO	Spectrum, 700 Path 2 SISO-2100AWS Path 2 SEC RAU, UpperC-LowerABC	1
SPT-S1-8019-22*	Spectrum, 800 Path 2-1900 Path 2 Secondary RAU	1
SPT-S1-8090-1*	Spectrum, 800-900 SMR Secondary RAU	1
SPT-S1-80AWS-1*	Spectrum, 800-2100AWS Path 1 Secondary RAU	1
SPT-M1-8519-1	Spectrum, 850-1900 Main RAU	1
SPT-S1-8519-22	Spectrum, 850 Path 2-1900 Path 2 Secondary RAU	1
SPT-S1-2121-1-MIMO	Spectrum, 2100AWS MIMO Secondary RAU	2
SPT-M1-AWS19-11	Spectrum, 2100AWS Path 1-1900 Path 1 Main RAU	2
SPT-S1-AWS19-12	Spectrum, 2100AWS Path 1-1900 Path 2 Secondary RAU	2
High Power RAUs		
SPT-S3-70AWS-11-HP	Spectrum, 700 Path 1 uC/LABC-AWS HP Path 1 Secondary RAU	1
SPT-S3-70AWS-22-HP	Spectrum, 700 Path 2 uC/LABC-AWS HP Path 2 Secondary RAU	1
SPT-S3-8019-22-HP*	Spectrum, 800 Path 2-1900 HP Path 2 Secondary RAU	1
SPT-M3-8019-31-HP*	Spectrum, 800 Path 3 - 1900 HP Path 1 Main RAU	1
SPT-M3-8519-11-HP	Spectrum, 850 Path 1-1900 HP Path 1 Main RAU	1
SPT-S3-8519-22-HP	Spectrum, 850 Path 2 - 1900 HP Path 2 Secondary RAU	1
SPT-S3-2323-12-HP	FlexWave Spectrum, 2300 HPp1 - 2300 HPp2 Secondary RAU	2
SPT-S3-2626-12-HP	Spectrum, 2600HP Path 1 - 2600HP Path 2 Secondary RAU	2

* There are two bands per RAU, which results in two N connectors. When there is one N connector, the two bands are combined internally and both bands use the single N connector.

©2015 TE Connectivity

Install the RAUs and Antennas

Follow the steps in the order provided to install the RAUs and antennas.

Mount the RAUs and Antennas

CAUTION! **Wet conditions increase the potential for receiving an electrical shock when installing or using electrically powered equipment. To prevent electrical shock, never install or use electrical equipment in a wet location or during a lightning storm.**

CAUTION! **This system is a RF Transmitter and continuously emits RF energy. Maintain a minimum 8-inch (20 cm) clearance from the antenna while the system is operating. Whenever possible, shut down the RAN before servicing the antenna.**

NOTE: **RAUs are suitable for use in environmental air space in accordance with Section 300-22(c) of the National Electrical Code, and Sections 2-128, 12-010(3) and 12-100 of the Canadian Electrical Code, Part 1, CSA C22.1.**

CAUTION! **Install RAUs in indoor locations only. Do not connect an antenna installed in an outdoor location to a RAU, unless it is in an approved AOC weatherproof NEMA4 housing.**

CAUTION! **Attach all RAUs securely to a stationary object (that is, a wall, pole, or ceiling brackets). To mount a RAU securely to a wall, ceiling bracket, or pole, use #6 diameter fasteners in the four slotted mounting holes.**

CAUTION! **Do the following to maintain proper ventilation:**

- **Keep at least 76 mm (3-inch) clearance around the RAU.**
- **Do not stack RAUs on top of each other.**
- **Always mount the RAU with the solid face (containing the mounting holes) against the mounting surface.**

NOTE: **You can place the RAU, without its fastening hardware, on a flat surface, such as a shelf, desk, cabinet, or any other horizontal surface that allows stable placement, with the mounting base facing down to the mounting surface.**

CAUTION! **If installing the RAU on a flat surface, the surface must be able to hold a minimum 7-pound load securely.**

Do the following, in the order presented, to mount the RAUs and antennas:

1. Mount all MRAU and SRAUs in the locations marked on the floor plans.
2. Install the passive antennas according to the manufacturer's installation instructions.

NOTE: **It is common practice to install passive antennas below the ceiling. If you install a passive antenna above the ceiling, when estimating the antenna coverage area, account for additional loss due to the ceiling material.**

©2015 TE Connectivity

3 Connect a passive multi-band antenna to the N connector on each RAU using coaxial cable with the least amount of loss possible. (See "Omni Antenna Specifications" on page 27 for information on the Omni Antenna ports.)

CAUTION! Firmly hand-tighten the N connector. DO NOT over-tighten the connector.

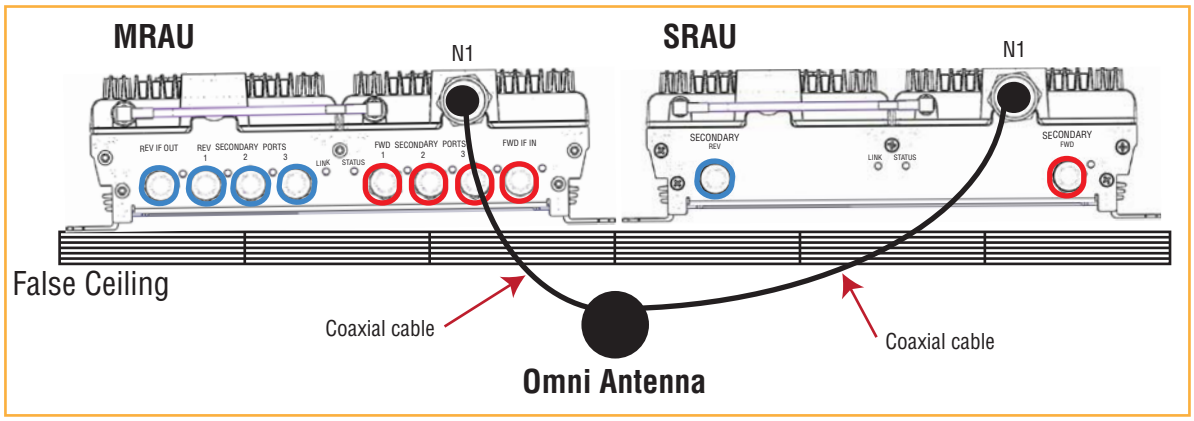

Connect the IFEU to the MRAU

NOTE: The IFEU should be powered up before starting this procedure; see the *InterReach Spectrum Expansion Module Group Installation Guide* (TECP-77-167).

4 Follow these rules for the CATV cables when connecting the IFEU to the MRAU:

- The FWD and REV cables should be close to the same length.
- The FWD and REV cables should be the same cable type (both RG6 or both RG11).
- A pair of CATV cables connects each MRAU to the IFEU. The IFEU REV Module IF IN port and the IFEU FWD Module IF OUT port must match. For example, if IFEU REV Module IF IN Port 3 is used, use IFEU FWD Module IF OUT Port 3.
- Refer to "75-Ohm CATV Cable Requirements and Specifications" on page 22 for information on maximum RG-6 or RG-11 CATV cable lengths.

5 Test the cable termination for each CATV cable before installing it.

©2015 TE Connectivity

6 Connect F connector CATV cables on the IFEU and MRAU, in the order given below.

If the LEDs do not perform as described in this procedure, refer to "MRAU LEDs" on page 8.

- **a** Connect a CATV cable from one of the IFEU FWD Module IF OUT connectors (1 - 8) to the MRAU FWD IF IN connector.
- **b** Confirm that the MRAU FWD IF IN LED is yellow, which indicates a correct physical connection.
- **c** Connect a CATV cable from the IFEU REV Module IF IN connector (1 - 8) to the MRAU REV IF OUT connector, making sure that you pair the port used to the same port number selected in Step 6a.

  If the connection is correct, the MRAU powers up and the MRAU FWD IF IN LED turns green.

NOTE: **Torque applied to the F connector CATV cables should be 7 ±5% in-lbs.**

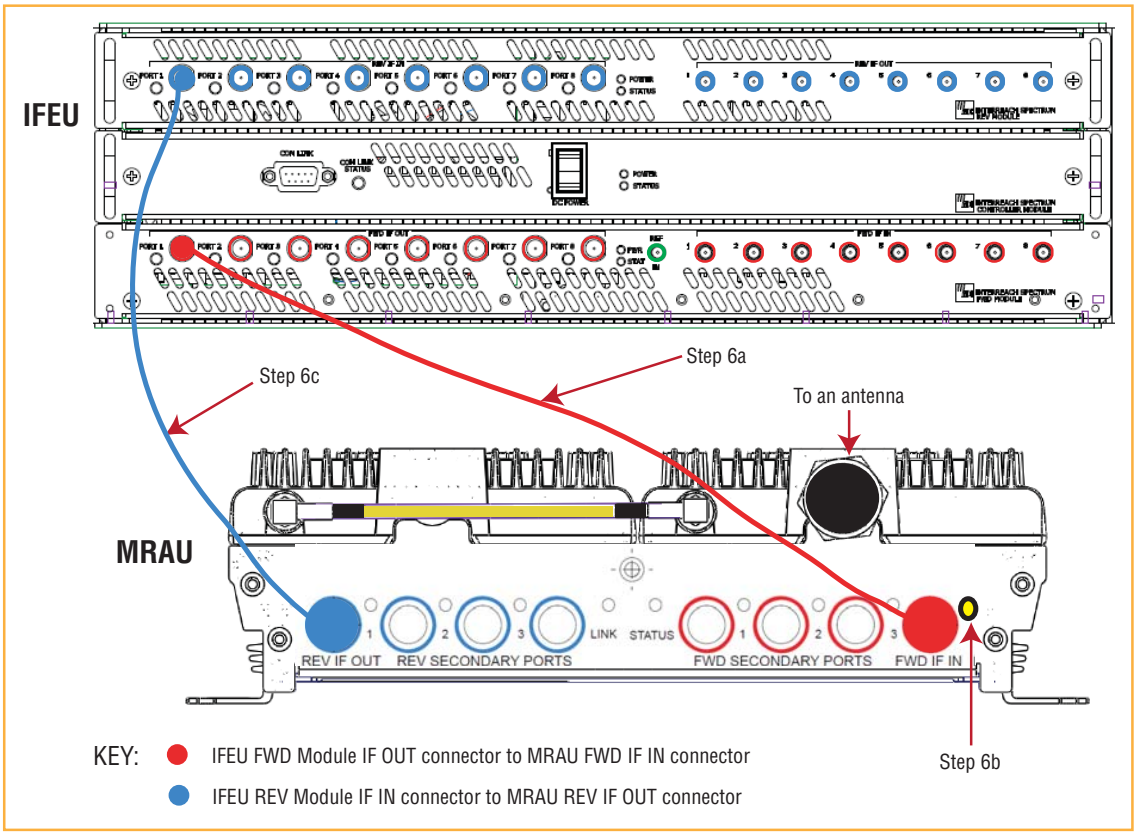

Connect the MRAU to SRAUs

CAUTION! **To prevent interference, do not install an 850/1900 MRAU passive antenna element near an 800/900 SRAU passive antenna element. The 850 MHz band must be ~20 feet away from the 800/1900 SRAU's passive antenna.**

7 Use one of the following 6' and 20' CATV RG6 jumpers, available for purchase from TE Connectivity, to connect an MRAU to SRAUs.

TE Part Number	Description	Note
300469-0	6' RG-6 Cable; F Male to F Male	CATV cable that connects the MRAU to SRAUs. Two cables required per SRAU.
300469-1	20' RG-6 Cable; F Male to F Male	CATV cable that connects the MRAU to SRAUs. Two cables required per SRAU.

©2015 TE Connectivity

8 Test the cable termination for each CATV cable before installing it.

9 Connect F connector CATV cables from the MRAU to an SRAU, in the order given below. If the LEDs do not perform as described in this procedure, refer to "SRAU LEDs" on page 10.

   a Connect a CATV cable from an MRAU FWD SECONDARY PORT (1, 2, or 3) F connector to the SRAU SECONDARY FWD F connector.

   b Confirm that the SRAU SECONDARY FWD LED is yellow, which indicates a correct physical connection.

   c Connect a CATV cable from an MRAU REV SECONDARY PORT (1, 2, or 3) F connector to the SRAU SECONDARY REV F connector, matching the same port number selected in Step 9a. That is, if in Step 9a you connected an F connector to the MRAU FWD SECONDARY PORT **1**, the paired CATV cable must connect to the MRAU REV SECONDARY PORT **1**.

   If the connection is correct, the SRAU powers up and the SRAU SECONDARY FWD LED turns green.

NOTE: **Torque applied to the F connector CATV cables should be 7 ±5% in-lbs.**

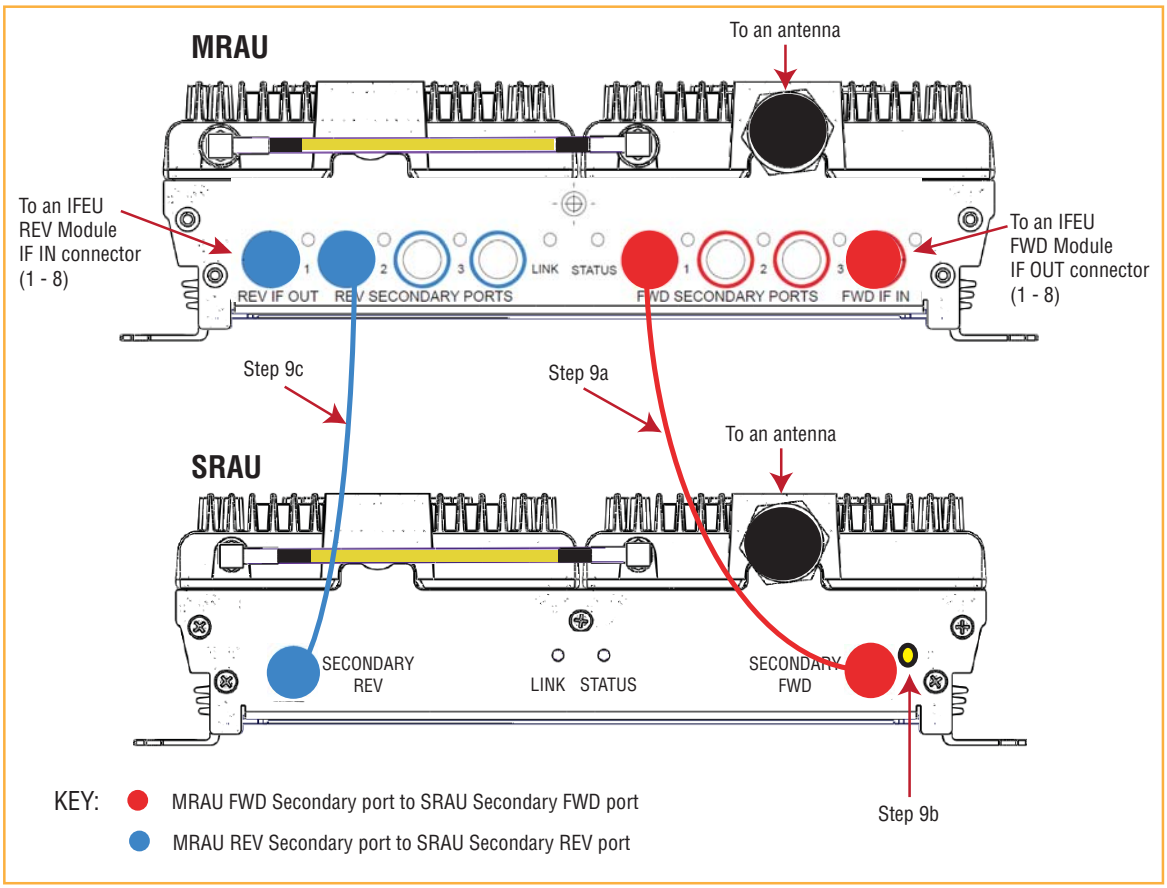

©2015 TE Connectivity

10 Repeat Step 9 to install up to two more SRAUs, as per system design.

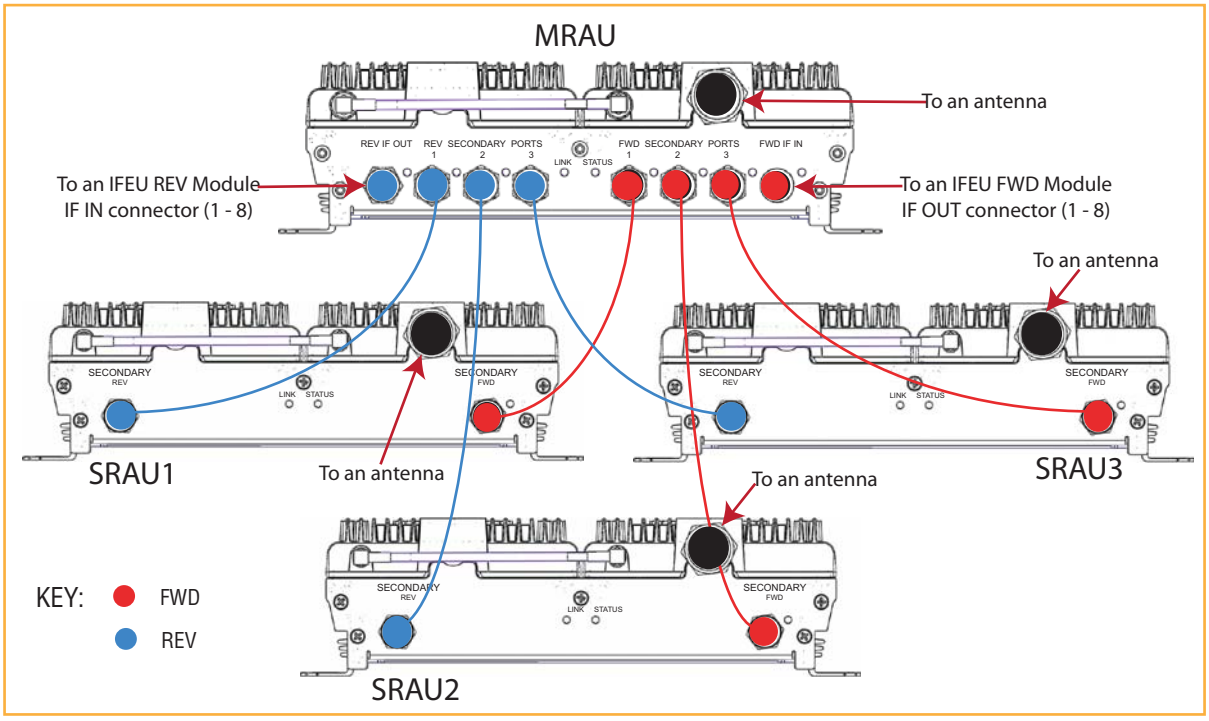

Configure the MRAUs and SRAUs

Refer to the *InterReach Spectrum™ Element Management System 7.3 User Manual* (TECP-77-200) for information on how to configure the MRAUs and SRAUs.

SPECIFICATIONS

Remote Access Unit Specifications

Operating Temp	-25°C to +50°C
Storage Temperature	-40°C to +70°C
Humidity	10% to 95% non-condensing
Dimensions	11.50" W x 3.50" H x 9.00" D
Weight	7.49 Pounds
Power Source	+54Vdc (from IFEU)

Spectrum System Specifications

RF Specification

Supported Frequency Blocks	2 per Remote Antenna Unit; 1-8 per Host Unit
Bandwidth	1.5 to 75 MHz non-contiguous

Propagation Delay

System Delay	<12 microseconds per DART Remote Unit (DRU) link (For example, in a cascade of 3 DRUs, the overall System Delay could be up to 36 microseconds. This does not include Fiber Delay, just System Delay along each segment of the cascade.)
Delay Management Digital	(Manual or Automatic)

Nominal Passband Bandwidths and Specifications

Bandwidth	RF Frequency	
	TX	RX
700 Lower ABC	728-746	698-716
700 Upper C	746-756	776-786
800 SMR	851-869	806-824
850 Cell	869-894	824-849
900 SMR	935-940	896-901
1900 PCS	1930-1995	1850-1915
2300 WCS	2350 - 2360	2305 - 2315
2100 AWS	2110-2155	1710-1755
2600 LTE	2620-2690	2500-2570

©2015 TE Connectivity

	Low/Medium Power Level 700-900 MHz Typical		Low/Medium Power Level 1900-2600 MHz Typical		High Power Level 1900-2600 MHz Typical [3]	
	TX	RX	TX	RX	TX	RX
Average system gain with 180 m CATV [4] at 25°C (77° F) (dB)	9 to 40[1]/43[2]	-1 to 30	9 to 40[1]/43[2]	-1 to 30	9 to 48	-1 to 30
Ripple with 180 m CATV (dB)	2.5	3.0	3.5	4.0	3.5	4.0
Output IP3 (dBm)	38		38		43	
Input IP3 (dBm)		-8		-8		-8
Output 1 dB Compression Point (dBm)	26		26		31	
Noise Figure 1 HU-1 EMG-8 RAUs (dB)		17		17		17
Noise Figure 1 HU-4 EMG-32 RAUs (dB)		23		23		23

1 Low Power is defined here as a Standard MRAU used with Standard SRAUs; see Table 3 on page 19.
2 Medium Power is defined here as a High Power MRAU used with Standard SRAUs; see Table 4 on page 20.
3 High Power is used to define a High Power MRAU used with High Power SRAUs; see Table 5 on page 21.
4 See "System Gain Examples" on page 18.

System Gain Examples

System Gain is the addition of the RF DART gain + the RAU gain. This section provides examples of system gain, based on the following specifications:

1. All Standard and High Power (HP) MRAUs and SRAUs have 0 db of RX gain
2. Standard MRAU and SRAUs have 0 dB of TX gain
3. The HP MRAU adds 3 dB of TX gain on its bands and all bands of Standard and HP SRAUs connected to it
4. HP MRAUs and HP SRAUs add an additional 5 dB of TX gain on the 1900, 2100, and 2600 RF bands

Example A: All RAUs RX Configuration

RX Gain 850 MHz band: -1 to 30 dB (RF DART gain) + 0 dB (Standard MRAU and SRAU gain) = -1 to 30 dB

Example B: Low Power Level Configuration: SPT-M1-8519-1 + SPT-S2-70AWS-1-SISO

TX Gain 850 MHz band: 9 to 40 dB (RF DART gain) + 0 dB (Standard MRAU gain) = 9 to 40 dB

TX Gain 1900 MHz band: 9 to 40 dB (RF DART gain) +0 dB (Standard MRAU gain) = 9 to 40 dB

TX Gain 700 MHz band: 9 to 40 dB (RF DART gain) + 0 dB (Standard SRAU with Standard MRAU gain) = 9 to 40 dB

TX Gain 2100 MHz band: 9 to 40 dB (RF DART gain) + 0 dB (Standard SRAU with Standard MRAU gain) = 9 to 40 dB

©2015 TE Connectivity

Example C: Medium Power Level Configuration: SPT-M3-8519-11-HP + SPT-S2-70AWS-1-SISO

TX Gain 850 MHz band: 9 to 40 dB (RF DART gain) + 3 dB (HP MRAU gain) = 12 to 43 dB

TX Gain 1900 MHz band: 9 to 40 dB (RF DART gain) + 3 dB + 5 dB (HP MRAU gain + added HP 1900 band gain) = 17 to 48 dB

TX Gain 700 MHz band: 9 to 40 dB (RF DART gain) + 3 dB (Standard SRAU with MRAU gain) = 12 to 43 dB

TX Gain 2100 MHz band: 9 to 40 dB (RF DART gain) + 3 dB (Standard SRAU with MRAU gain) = 12 to 43 dB

Example D: High Power Level Configuration: SPT-M3-8519-11-HP + SPT-S3-70AWS-11-HP

TX Gain 850 MHz band: 9 to 40 dB (RF DART gain) + 3 dB (HP MRAU gain) = 12 to 43 dB

TX Gain 1900 MHz band: 9 to 40 dB (RF DART gain) + 3 dB + 5 dB (HP MRAU gain + added HP 1900 band gain) = 17 to 48 dB

TX Gain 700 MHz band: 9 to 40 dB (RF DART gain) + 3 dB (HP SRAU with HP MRAU gain) = 12 to 43 dB

TX Gain 2100 MHz band: 9 to 40 dB (RF DART gain) + 3 dB + 5 dB (HP SRAU with HP MRAU gain + added HP 2100 band gain) = 17 to 48 dB

Composite Power Out of RAU

Table 3. *Low Power Level: Standard MRAU with SRAUs*

		RF Frequency		Power per Carrier (dBm) per Band: Number of RF Carriers				
		TX	RX	1 P-out	2 P-out	4 P-Out	8 P-out	
Standard MRAUs: • SPT-M1-8519-1 • SPT-M1-AWS19-11 Standard SRAUs • SPT-S1-8090-1 • SPT-S1-7070-1-MIMO • SPT-S1-80AWS-1 • SPT-S2-70AWS-1-SISO • SPT-S2-70AWS-22-SISO • SPT-S1-AWS19-12 • SPT-S1-2121-1-MIMO • SPT-S1-8019-22 • SPT-S1-8519-22	700 Upper C	746-756	776-786	15.0	12.0	9.0	6.0	LTE
	700 Lower ABC	728-746	698-716					
	800 SMR	851-869	806-824	17.5	14.0	10.0	6.5	iDEN
				26.0	19.5	13.5	8.5	APCO 25 C4FM
				15.0	12.0	9.0	6.0	CDMA
				15.0	12.0	9.0	6.0	LTE
	850 Cell	869-894	824-849	26.0	20.0	14.0	9.0	GSM
				23.0	17.5	12.0	8.0	EDGE
				15.0	12.0	9.0	6.0	CDMA
				15.0	12.0	9.0	6.0	WCDMA
				15.0	12.0	9.0	6.0	LTE
	900 SMR	935-940	896-901	17.5	14.0	10.0	6.5	iDEN
				26.0	20.0	13.5	9.0	APCO 25 C4FM
	1900 PCS	1930-1995	1850-1915	26.0	20.0	14.0	9.0	GSM
				23.0	17.5	12.0	8.0	EDGE
				15.0	12.0	9.0	6.0	CDMA
				15.0	12.0	9.0	6.0	WCDMA
				15.0	12.0	9.0	6.0	LTE
	2100 AWS	2110-2155	1710-1755	15.0	12.0	9.0	6.0	WCDMA
				15.0	12.0	9.0	6.0	LTE

©2015 TE Connectivity

Table 4. *Medium Power Level: High Power MRAUs[1] used with Standard SRAUs*

		RF Frequency		Power per Carrier (dBm) per Band: Number of RF Carriers				
		TX	RX	1 P-out	2 P-out	4 P-Out	8 P-out	
Standard SRAUs • SPT-S1-8090-1 • SPT-S1-7070-1-MIMO • SPT-S1-80AWS-1 • SPT-S2-70AWS-1-SISO • SPT-S2-70AWS-22-SISO • SPT-S1-AWS19-12 • SPT-S1-2121-1-MIMO • SPT-S1-8019-22 • SPT-S1-8519-22	700 Upper C	746-756	776-786	18.0	15.0	12.0	9.0	LTE
	700 Lower ABC	728-746	698-716					
	800 SMR	851-869	806-824	17.5	14.0	10.0	6.5	iDEN
				26.0	19.5	13.5	8.5	APCO 25 C4FM
				18.0	15.0	12.0	9.0	CDMA
				18.0	15.0	12.0	9.0	LTE
	850 Cell	869-894	824-849	26.0	20.0	14.0	9.0	GSM
				23.0	17.5	12.0	8.0	EDGE
				18.0	15.0	12.0	9.0	CDMA
				18.0	15.0	12.0	9.0	WCDMA
				18.0	15.0	12.0	9.0	LTE
	900 SMR	935-940	896-901	17.5	14.0	10.0	6.5	iDEN
				26.0	19.5	13.5	8.5	APCO 25 C4FM
	1900 PCS	1930-1995	1850-1915	26.0	20.0	14.0	9.0	GSM
				23.0	17.5	12.0	8.0	EDGE
				18.0	15.0	12.0	9.0	CDMA
				18.0	15.0	12.0	9.0	WCDMA
				18.0	15.0	12.0	9.0	LTE
	2100 AWS	2110-2155	1710-1755	18.0	15.0	12.0	9.0	WCDMA
				18.0	15.0	12.0	9.0	LTE

1 See power per carrier of HP MRAU from Table 5 on page 21.

Table 5. *High Power Level: High Power MRAU with High Power SRAUs*

		RF Frequency		Power per Carrier (dBm) per Band — Number of RF Carriers				
		TX	RX	1 P-out	2 P-out	4 P-Out	8 P-out	
High Power MRAU • SPT-M3-8519-11-HP • SPT-M3-8019-31-HP High Power SRAUs • SPT-S3-70AWS-11-HP • SPT-S3-70AWS-22-HP • SPT-S3-8019-22-HP • SPT-S3-8519-22-HP • SPT-S3-2323-12-HP • SPT-S3-2626-12-HP	700 Upper C	746-756	776-786	18.0	15.0	12.0	9.0	LTE
	700 Lower ABC	728-746	698-716					
	800 SMR	851-869	806-824	17.5	14.0	10.0	6.5	iDEN
				26.0	19.5	13.5	8.5	APCO 25 C4FM
				18.0	15.0	12.0	9.0	CDMA
				18.0	15.0	12.0	9.0	LTE
	850 Cell	869-894	824-849	26.0	20.0	14.0	9.0	GSM
				23.0	17.5	12.0	8.0	EDGE
				18.0	15.0	12.0	9.0	CDMA
				18.0	15.0	12.0	9.0	WCDMA
				18.0	15.0	12.0	9.0	LTE
	900 SMR	935-940	896-901	17.5	14.0	10.0	6.5	iDEN
				26.0	19.5	13.5	8.5	APCO 25 C4FM
	1900 PCS	1930-1995	1850-1915	26.0	23.0	19.0	14.0	GSM
				26.0	22.5	17.0	13.0	EDGE
				23.0	20.0	17.0	14.0	CDMA
				23.0	20.0	17.0	14.0	WCDMA
				23.0	20.0	17.0	14.0	LTE
	2100 AWS	2110-2155	1710-1755	23.0	20.0	17.0	14.0	WCDMA
				23.0	20.0	17.0	14.0	LTE
	2300 WCS	2350 - 2360	2305 - 2315	23.0	20.0	17.0	14.0	LTE
	2600 LTE	2620-2690	2500-2570	23.0	20.0	17.0	14.0	WCDMA
				23.0	20.0	17.0	14.0	LTE

NOTE: **Models SPT-M3-8019-31-HP and SPT-S3-8019-22-HP - Industry Canada Mean Output Power is 24.33 dBm (800 SMR) and 26.83 dBm (1900 PCS).**

©2015 TE Connectivity

75-Ohm CATV Cable Requirements and Specifications

The 75-Ohm CATV Cable:

- connects the IFEU to MRAU(s) and the MRAU(s) to the SRAU(s)
- transmits (FWD) multiband and receives (REV) IF signals
- delivers DC electrical power to the RAUs. The Spectrum IFEU DC voltage output is +54Vdc nominal. If the IFEU reaches its current limit, a current-limiting circuit protects it.
- carries configuration and status information
- uses 75Ω type-F connectors with captive center pins.

CATV Cable Requirements

Belden CATV cable or equivalent is required (see Figure 2).

- For the RG-6 cable, use a Belden 1695A Coax.
- For the RG-11 cable, use a Belden 7732A Coax.

NOTE: **TE Connectivity requires solid copper center conductor CATV cable for proper DC voltage to the RAU and maximum distances.**

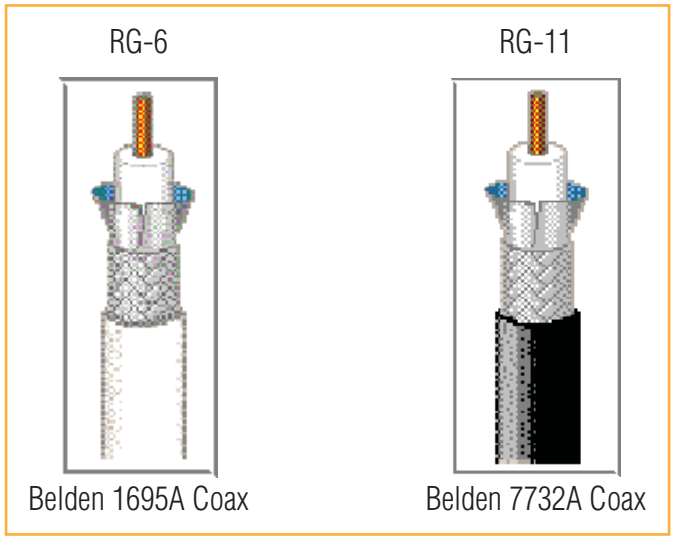

Figure 2. Belden 1695A and 7732A Coax Cables

- Use RG-6 or RG-11 CATV cable between the IFEU and MRAU, the typical lengths of which are listed below.

Cable Type	Minimum Length		Maximum Length	
	Meters	Feet	Meters	Feet
RG-6	0	0	125	410
RG-11	0	0	180	590

©2015 TE Connectivity

- Use only RG-6 CATV cable between the MRAU and SRAU, the lengths of which are listed below.

RG-6 Cable	Meters	Feet
Typical	2	6.56
800/900 iDEN to 850 CELL	6	19.68
800 AWS to 850 CELL	6	19.68

Belden 1695A Coax Specifications

Description

RG-6/U type, 18 AWG solid 0.040-inch bare copper conductor, plenum, foam Fluorinated Ethylene Propylene (FEP) insulation, Duofoil® + tinned copper braid shield (95% coverage), Flamarrest® jacket.

Overall Physical Characteristics

Conductor	One Coax 18 AWG Solid stranding Bare Copper (BC) conductor material 0.040-inch diameter
Insulation	Teflon® Foam Fluorinated Ethylene Propylene (FFEP) 0.170-inch diameter
Outer Shield Layer 1	Duofoil® Tape Aluminum Foil-Polyester Tape-Aluminum Foil 100% coverage
Outer Shield Layer 2	Braid Tinned Copper (TC) 95% coverage
Outer Jacket	Flamarrest® Low Smoke Polyvinyl Chloride (LS PVC)
Overall Cabling	0.234-inch overall nominal diameter

©2015 TE Connectivity

Overall Nominal Electrical Characteristics

Characteristic Impedance	75.000Ω
Inductance	0.103 μH/ft.
Capacitance Conductor to Shield	16.100 (pF/ft.)
Velocity of Propagation	82 (%)
Delay	1.240 (ns/ft.)
Conductor DC Resistance	6.400 @ 20°C (Ω/1000 ft.)
Outer Shield DC Resistance	2.800 @ 20°C (Ω/1000 ft.)

Attenuation

Freq. (MHz)	Attenuation (dB/100 ft.)
1.000	0.240
3.580	0.450
5.000	0.550
7.000	0.650
10.000	0.750
67.500	1.740
71.500	1.780
88.500	1.940
100.000	2.100
135.000	2.400
143.000	2.500
180.000	2.800
270.000	3.400
360.000	4.000
540.000	5.200
720.000	6.100
750.000	6.200
1000.000	7.300
1500.000	9.200
2000.000	10.900
2250.000	11.600
3000.000	13.700

©2015 TE Connectivity

Belden 7732A Coax Specifications

Description

RG-11/U type, 14 AWG solid 0.064-inch bare copper conductor, plenum, foam FEP insulation, Duofoil® + tinned copper braid shield (95% coverage), fluorocopolymer jacket.

Overall Physical Characteristics

Conductor	One Coax 18 AWG Solid stranding Bare Copper (BC) conductor material 0.064-inch diameter
Insulation	Teflon® Foam Fluorinated Ethylene Propylene (FFEP) 0.274-inch diameter
Outer Shield Layer 1	Duofoil® Tape Aluminum Foil-Polyester Tape-Aluminum Foil 100% coverage
Outer Shield Layer 2	Braid Tinned Copper (TC) 95% coverage
Outer Jacket	Fluorocopolymer (PVDF)
Overall Cabling	0.348-inch overall nominal diameter

©2015 TE Connectivity

Overall Nominal Electrical Characteristics

Characteristic Impedance	75.000Ω
Inductance	0.091 μH/ft.
Capacitance Conductor to Shield	16.300 (pF/ft.)
Velocity of Propagation	83 (%)
Delay	1.220 (ns/ft.)
Conductor DC Resistance	2.500 @ 20°C (Ω/1000 ft.)
Outer Shield DC Resistance	1.600 @ 20°C (Ω/1000 ft.)

Attenuation

Freq. (MHz)	Attenuation (dB/100 ft.)
1.000	0.150
3.580	0.260
5.000	0.300
7.000	0.340
10.000	0.400
67.500	1.200
71.500	1.240
88.500	1.400
100.000	1.500
135.000	1.780
143.000	1.840
180.000	2.090
270.000	2.600
360.000	3.100
540.000	3.890
720.000	4.570
750.000	4.680
1000.000	5.500
1500.000	6.910
2000.000	8.130
2250.000	9.200
3000.000	10.200

©2015 TE Connectivity

Omni Antenna Specifications

The Omni Antenna (4214-0727 or the Low PIM 4214-0727-P), shown in Figure 3, is a round radome with the following specifications:

Figure 3. Omni Antenna

	Port 1	Port 2	Port 3
Gain, typical	2 dBi @ 698-960 MHz	2 dBi @ 698-960 MHz	3 dBi @1710-2170 MHz
	3 dBi @ 1710-2170 MHz	3 dBi @ 1710-2170 MHz	3 dBi @ 2496-2690 MHz
Nominal impedance	50 Ohm		
Polarization	Vertical		
VSWR	< 2:1		
Port-to-port isolation	>15 dB min, 22 dB typical		
PIM (@2x43 dBm)	-153 dBc		
	5 Watt		
Mechanical			
Dimension of Antenna (DxH)	215 x 72 mm		
Weight	Less than or equal to 1.65 lbs (0.75kg), including pigtails		
Connector	N (male)		
Cable (pigtail) length	6 feet, plenum rated cable		
Color	White, UV protected plastic for outdoor use		
Mounting hardware	Screws, anchor, and butterfly nut for ceiling tile mount		
Environmental			
Operating temperature	- 40°C to + 65°C		
Shipping and Handling	ISTA Procedure 1A		
Ingress protection	IP-42		
Flammability	UL94V0 (Materials)		
Compliance	ROHS compliant		

NOTE: **Two antennas per RAU is required for MIMO performance.**

CAUTION! **Maximum gain antenna allowed is 3dBi**

©2015 TE Connectivity

Standards Certification

Federal Communications Commission (FCC)

This equipment complies with the applicable sections of Title 47 CFR, Part 22 (800 MHz Cellular), Part 24 (1900 MHz - PCS), Part 90 (800/900 - SMR), and Part 27 (700 MHz, 2100 MHz - AWS).

Signal Boosters

WARNING. This is **NOT** a **CONSUMER** device. It is designated for installation by **FCC LICENSEES** and **QUALIFIED INSTALLERS**. You **MUST** have an **FCC LICENSE** or express Consent of an FCC Licensee to operate this device. Unauthorized use may result in Significant forfeiture penalties, including penalties in excess of $100,000 for each continuing violation.

Part 90 Signal Boosters

The following statement is applicable to the following RAUs that are documented in this installation guide: SPT-M3-8019-31-HP, SPT-S1-8019-22, SPT-S1-8090-1, SPT-S1-80AWS-1, SPT-S3-8019-22-HP.

WARNING. This is **NOT** a **CONSUMER** device. It is designated for installation by **FCC LICENSEES** and **QUALIFIED INSTALLERS**. You **MUST** have an **FCC LICENSE** or express Consent of an FCC Licensee to operate this device. You **MUST** register Class B signal boosters (as defined in 47 CFR 90.219) online at http://www.fcc.gov/signal-boosters/registration. Unauthorized use may result in Significant forfeiture penalties, including penalties in excess of $100,000 for each continuing violation.

Industry Canada (IC)

This equipment complies with the applicable sections of RSS-131- Zone Enhancers for the Land Mobile Service. The term “IC:” before the radio certification number only signifies that Industry Canada Technical Specifications were met.

The Manufacturer's rated output power of this equipment is for single carrier operation. For situations when multiple carrier signals are present, the rating would have to be reduced by 3.5 dB, especially where the output signal is re-radiated and can cause interference to adjacent band users. This power reduction is to be by means of input power or gain reduction and not by an attenuator at the output of the device.

NOTE: **The U. S. Federal Communications Commission (FCC) has developed guidelines for evaluation of human exposure to RF emissions. The guidelines incorporate limits for Maximum Permissible Exposure (MPE) for power density of transmitter operating at frequencies between 300 kHz and 100 GHz. Limits have been set for portable, mobile, and fixed equipment. TE Connectivity products fall in the category of fixed equipment; products intended to be permanently secured and exposures are evaluated for distances greater than 40cm (15.75”). Portable devices fall into exposures of less than 20cm, where SAR evaluations are used.**

Antenna gain is restricted to 1.5 W ERP (2.49 W EIRP) in order to satisfy RF exposure compliance requirements. If higher than 1.5 W ERP, routine MPE evaluation is needed. The antennas should be installed to provide at least 40cm from all persons to satisfy MPE requirements of FCC Part 2, 2.1091.

This device complies with Industry Canada licence-exempt RSS standard(s). Operation is subject to the following two conditions: (1) this device may not cause interference, and (2) this device must accept any interference, including interference that may cause undesired operation of the device.

Le présent appareil est conforme aux CNR d’Industrie Canada applicables aux appareils radio exempts de licence. L’exploitation est autorisée aux deux conditions suivantes: (1) l’appareil ne doit pas produire de brouillage, et (2) l’utilisateur de l’appareil doit accepter tout brouillage radioélectrique subi, même si le brouillage est susceptible d’en compromettre le fonctionnement.

The device meets the exemption from the routine evaluation limits in section 2.5 of RSS 102 and compliance with RSS-102 RF exposure, users can obtain Canadian information on RF exposure and compliance.

Le dispositif rencontre l'exemption des limites courantes d'évaluation dans la section 2.5 de RSS 102 et la conformité à l'exposition de RSS-102 rf, utilisateurs peut obtenir l'information canadienne sur l'exposition et la conformité de rf.

©2015 TE Connectivity

UL/CUL

This equipment will be installed in a restricted access location. This equipment complies, per UL and CUL 50, Standard for Enclosures for Electrical Equipment.

This equipment complies with UL and CUL 60950-1 Standard for Safety for Information Technology Equipment, including Electrical Business Equipment.

All InterReach Spectrum RAUs are Plenum rated and suitable for use in environmental air space in accordance with Section 300-22(C) of the National Electrical Code, and Sections 2-128, 12-010(3) and 12-100 of the Canadian Electrical Code, Part 1, CSA C22.1.

This equipment is UL Plenum rated under UL 2043.

CAUTION! Modifications not expressly approved by the party responsible for compliance could void the user's authority to operate the equipment.

©2015 TE Connectivity

Accessing User Documentation on the TE Customer Portal

You can access additional user documentation on the TE Customer Portal, as described below.

1. Click on the following URL link:

   https://www.te.com/portal/wireless/

   (Alternatively, enter the preceding URL into your web browser, and then press **Enter** on your keyboard.)

2. Access to the Customer Portal requires a user account and password. On the **Sign In** page, do one of the following:
   - If you have an account, in the **Already Registered? Sign In Now** panel, enter your **Email** and **Password**, and then click **Sign In**.
   - If you don't have an account, under **Create an Account**, click **Register Now** and follow the prompts.
3. On the **Wireless Customer Portal** home page in the **Knowledge Center** panel, click the **Manuals and Data Sheets** link.
4. On the **Manuals and Data Sheets** page, do the following:
   - **a** In the **Document Repository** panel, scroll to the section for the product line of the document that you want to access.
   - **b** Click on the title of the manual that you wish to open.
   - **c** (Optional) Save the PDF to your computer.

©2015 TE Connectivity

Contacting TE Connectivity

Telephone Numbers

Sales	
Asia Pacific	+65-6294-9948
France	0800 914032
Germany	0180 2232923
Italy	0800 782374
Spain	900 983291
United Kingdom	0800 960236
USA or Canada	1-800-366-3891
Extension	73000
Connectivity Extension	73475
Wireless Extension	73476

Technical Support

USA or Canada	1-800-530-9960
Elsewhere	+1-952-917-0761

Online Access

Customer Portal

https://www.te.com/portal/wireless/

Technical Support for Wireless Products

http://www.te.com/WirelessSupport

www.te.com/wireless

©2015 TE Connectivity