Table 5-30 Link Budget Considerations for Narrowband Systems (continued)

<table>
<tr><th>Consideration</th><th>Description</th></tr>
<tr><td>Thermal Noise</td><td>This is the noise level in the signal bandwidth (BW).
Thermal noise power = –174 dBm/Hz + 10Log(BW).
<table>
<tr><th>Protocol</th><th>Signal Bandwidth</th><th>Thermal Noise</th></tr>
<tr><td>TDMA</td><td>30 kHz</td><td>–129 dBm</td></tr>
<tr><td>GSM</td><td>200 kHz</td><td>–121 dBm</td></tr>
<tr><td>iDEN</td><td>25 kHz</td><td>–130 dBm</td></tr>
</table></td></tr>
<tr><td>Required C/I ratio</td><td>For each wireless standard a certain C/I (carrier to interference) ratio is needed to obtain acceptable demodulation performance. For narrowband systems, (TDMA, GSM, EDGE, iDEN, AMPS) this level varies from about 9 dB to 20 dB.</td></tr>
<tr><td>Mobile Transmit Power</td><td>The maximum power the mobile can transmit (power transmitted at highest power level setting).</td></tr>
<tr><td>Multipath Fade Margin</td><td>This margin allows for a certain level of fading due to multipath interference. Inside buildings there is often one or more fairly strong signals and many weaker signals arriving from reflections and diffraction. Signals arriving from multiple paths add constructively or destructively. This margin accounts for the possibility of destructive multipath interference. In RF site surveys this margin will not appear because it will be averaged out over power level samples taken over many locations.</td></tr>
<tr><td>Log-normal Fade Margin</td><td>This margin adds an allowance for RF shadowing due to objects obstructing the direct path between the mobile equipment and the RAU. In RF site surveys, this shadowing will not appear because it will be averaged out over power level samples taken over many locations.</td></tr>
<tr><td>Body Loss</td><td>This accounts for RF attenuation caused by the user’s head and body.</td></tr>
<tr><td>Minimum Received Signal Level</td><td>This is also referred to as the “design goal”. The link budget says that you can achieve adequate coverage if the signal level is, on average, above this level over 95% of the area covered, for example.</td></tr>
</table>

5.4.2 Narrowband Link Budget Analysis for a Microcell Application

Narrowband Link Budget Analysis: Downlink

Line	Downlink	
	Transmitter	
a.	BTS transmit power per carrier (dBm)	33
b.	Attenuation between BTS and Unison (dB)	–23
c.	Power into Unison (dBm)	10
d.	Unison gain (dB)	0
e.	Antenna gain (dBi)	3
f.	Radiated power per carrier (dBm)	**13**
	Airlink	
g.	Multipath fade margin (dB)	6
h.	Log-normal fade margin with 8 dB std. deviation, edge reliability 90% (dB)	11
i.	Body loss (dB)	3
j.	Airlink losses (not including facility path loss)	**20**
	Receiver	
k.	Thermal noise (dBm/30 kHz)	–129
l.	Mobile noise figure (dB)	7
m.	Required C/I ratio (dB)	17
n.	Minimum received signal (dBm)	**–105**
p.	**Maximum path loss** (dB)	**–98**

- c = a + b
- f = c + d + e
- j = g + h + i
- n = k + l + m
- k: in this example, k represents the thermal noise for a TDMA signal, which has a bandwidth of 30 kHz
- p = f – j – n

Narrowband Link Budget Analysis: Uplink

Line	Uplink	
	Receiver	
a.	BTS noise figure (dB)	4
b.	Attenuation between BTS and Unison (dB)	–10
c.	Unison gain (dB)	0
d.	Unison noise figure (dB) 1-4-32	22
e.	System noise figure (dB)	22.6
f.	Thermal noise (dBm/30 kHz)	–129
g.	Required C/I ratio (dB)	12
h.	Antenna gain (dBi)	3
i.	Receive sensitivity (dBm)	**–97.4**
	Airlink	
j.	Multipath fade margin (dB)	6
k.	Log-normal fade margin with 8 dB std. deviation, edge reliability 90% (dB)	10
l.	Body loss (dB)	3
m.	Airlink losses (not including facility path loss)	**19**
	Transmitter	
n.	Mobile transmit power (dBm)	28
p.	**Maximum path loss** (dB)	**106.4**

- e: enter the noise figure and gain of each system component (a, b, c, and d) into the standard cascaded noise figure formula

$$F_{sys} = F_1 + \frac{F_2 - 1}{G_1} + \frac{F_3 - 1}{G_1 G_2} + ...$$

where

$F = 10^{(\text{Noise Figure}/10)}$

$G = 10^{(\text{Gain}/10)}$

(See Rappaport, Theodore S. *Wireless Communications, Principles, and Practice*. Prentice Hall PTR, 1996.)

- i = f + e + g – h
- m = j + k + l
- p = n – m – i

Therefore, the system is downlink limited but the downlink and uplink are almost balanced, which is a desirable condition.

5.4.3 Elements of a Link Budget for CDMA Standards

A CDMA link budget is slightly more complicated because the spread spectrum nature of CDMA must be considered. Unlike narrowband standards such as TDMA and GSM, CDMA signals are spread over a relatively wide frequency band. Upon reception, the CDMA signal is de-spread. In the de-spreading process the power in the received signal becomes concentrated into a narrow band, whereas the noise level remains unchanged. Hence, the signal-to-noise ratio of the de-spread signal is higher than that of the CDMA signal before de-spreading. This increase is called *processing gain*. For IS-95 and J-STD-008, the processing gain is 21 dB or 19 dB depending on the user data rate (9.6 Kbps for rate set 1 and 14.4 Kbps for rate set 2, respectively). Because of the processing gain, a CDMA signal (comprising one Walsh code channel within the composite CDMA signal) can be received at a lower level than that required for narrowband signals. A reasonable level is –95 dBm, which results in about –85 dBm composite as shown below.

An important issue to keep in mind is that the downlink CDMA signal is composed of many orthogonal channels: pilot, paging, sync, and traffic. The composite power level is the sum of the powers from the individual channels. An example is given in the following table.

Table 5-31 Distribution of Power within a CDMA Signal

Channel	Walsh Code Number	Relative Power Level	
Pilot	0	20%	–7.0 dB
Sync	32	5%	–13.3 dB
Primary Paging	1	19%	–7.3 dB
Traffic	8–31, 33–63	9% (per traffic channel)	–10.3 dB

This table assumes that there are 15 active traffic channels operating with 50% voice activity (so that the total power adds up to 100%). Notice that the pilot and sync channels together contribute about 25% of the power. When measuring the power in a CDMA signal you must be aware that if only the pilot and sync channels are active, the power level will be about 6 to 7 dB lower than the maximum power level you can expect when all voice channels are active. The implication is that if only the pilot and sync channels are active, and the maximum power per carrier table says that you should not exceed 10 dBm for a CDMA signal, for example, then you should set the attenuation between the base station and the Main Hub so that the Main Hub receives 3 dBm (assuming 0 dB system gain).

An additional consideration for CDMA systems is that the uplink and downlink paths should be gain and noise balanced. This is required for proper operation of soft-hand-off to the outdoor network as well as preventing excess interference that is caused by mobiles on the indoor system transmitting at power levels that are not coordinated with the outdoor mobiles. This balance is achieved if the power level transmitted by the mobiles under close-loop power control is similar to the power level transmitted under open-loop power control. The open-loop power control equation is

$$P_{TX} + P_{RX} = -73 \text{ dBm (for Cellular, IS-95)}$$

$P_{TX} + P_{RX} = -76$ dBm (for PCS, J-STD-008)

where P_{TX} is the mobile's transmitted power and P_{RX} is the power received by the mobile.

The power level transmitted under closed-loop power control is adjusted by the base station to achieve a certain E_b/N_0 (explained in Table 5-32 on page 5-35). The difference between these power levels, Δ_P, can be estimated by comparing the power radiated from the RAU, $P_{downink}$, to the minimum received signal, P_{uplink}, at the RAU:

$\Delta_P = P_{downink} + P_{uplink} + 73$ dBm (for Cellular)

$\Delta_P = P_{downink} + P_{uplink} + 76$ dBm (for PCS)

It's a good idea to keep -12 dB $< \Delta_P <$ 12 dB.

Table 5-32 provides link budget considerations for CDMA systems.

Table 5-32 Additional Link Budget Considerations for CDMA

Consideration	Description
Power per carrier, downlink	This depends on how many channels are active. For example, the signal will be about 7 dB lower if only the pilot, sync, and paging channels are active compared to a fully-loaded CDMA signal. Furthermore, in the CDMA forward link, voice channels are turned off when the user is not speaking. On average this is assumed to be about 50% of the time. So, in the spreadsheet, both the power per Walsh code channel (representing how much signal a mobile will receive on the Walsh code that it is de-spreading) and the total power are used. The channel power is needed to determine the maximum path loss, and the total power is needed to determine how hard the Unison system is being driven. The total power for a fully-loaded CDMA signal is given by (approximately): total power = voice channel power + 13 dB + $10log_{10}(50\%)$ = voice channel power + 10 dB
Information Rate	This is simply $10log_{10}$(9.6 Kbps) = 40 dB for rate set 1 $10log_{10}$(14.4 Kbps) = 42 dB for rate set 2
Process Gain	The process of de-spreading the desired signal boosts that signal relative to the noise and interference. This gain needs to be included in the link budget. In the following formulas, P_G = process gain: $P_G = 10log_{10}(1.25\ MHz / 9.6\ Kbps)$ = 21 dB rate set 1 $P_G = 10log_{10}(1.25\ MHz / 14.4\ Kbps)$ = 19 dB rate set 2 Note that the process gain can also be expressed as $10log_{10}$ (CDMA bandwidth) minus the information rate.

Table 5-32 Additional Link Budget Considerations for CDMA (continued)

Consideration	Description
Eb/No	This is the energy-per-bit divided by the received noise and interference. It's the CDMA equivalent of signal-to-noise ratio (SNR). This figure depends on the mobile's receiver and the multipath environment. For example, the multipath delays inside a building are usually too small for a rake receiver in the mobile (or base station) to resolve and coherently combine multipath components. However, if artificial delay can be introduced by, for instance, using different lengths of cable, then the required E_b/N_o will be lower and the multipath fade margin in the link budget can be reduced in some cases. If the receiver noise figure is NF (dB), then the receive sensitivity (dBm) is given by: $P_{sensitivity} = NF + E_b/N_o$ + thermal noise in a 1.25 MHz band $- P_G$ $= \mathrm{NF} + E_b/N_o - 113\ (dBm/1.25\ MHz) - P_G$
Noise Rise	On the uplink, the noise floor is determined not only by the Unison system, but also by the number of mobiles that are transmitting. This is because when the base station attempts to de-spread a particular mobile's signal, all other mobile signals appear to be noise. Because the noise floor rises as more mobiles try to communicate with a base station, the more mobiles there are, the more power they have to transmit. Hence, the noise floor rises rapidly: $noise\ rise = 10log_{10}(1 / (1 - loading))$ where *loading* is the number of users as a percentage of the theoretical maximum number of users. Typically, a base station is set to limit the loading to 75%. This noise ratio must be included in the link budget as a worst-case condition for uplink sensitivity. If there are less users than 75% of the maximum, then the uplink coverage will be better than predicted.
Hand-off Gain	CDMA supports soft hand-off, a process by which the mobile communicates simultaneously with more than one base station or more than one sector of a base station. Soft hand-off provides improved receive sensitivity because there are two or more receivers or transmitters involved. A line for hand-off gain is included in the CDMA link budgets worksheet although the gain is set to 0 dB because the in-building system will probably be designed to limit soft-handoff.

Other CDMA Issues

- Never combine multiple sectors (more than one CDMA signal at the same frequency) into a Unison system. The combined CDMA signals will interfere with each other.
- Try to minimize overlap between in-building coverage areas that utilize different sectors, as well as in-building coverage and outdoor coverage areas. This is important because any area in which more than one dominant pilot signal (at the same frequency) is measured by the mobile will result in soft-handoff. Soft-handoff decreases the overall network capacity by allocating multiple channel resources to a single mobile phone.

5.4.4 Spread Spectrum Link Budget Analysis for a Microcell Application

Spread Spectrum Link Budget Analysis: Downlink

Line	Downlink	
	Transmitter	
a.	BTS transmit power per traffic channel (dBm)	30.0
b.	Voice activity factor	50%
c.	Composite power (dBm)	40.0
d.	Attenuation between BTS and Unison (dB)	–24
e.	Power per channel into Unison (dBm)	9.0
f.	Composite power into Unison (dBm)	16.0
g.	Unison gain (dB)	0.0
h.	Antenna gain (dBi)	3.0
i.	Radiated power per channel (dBm)	12.0
j.	Composite radiated power (dBm)	**19.0**
	Airlink	
k.	Handoff gain (dB)	0.0
l.	Multipath fade margin (dB)	6.0
m.	Log-normal fade margin with 8 dB std. deviation, edge reliability 90% (dB)	10.0
n.	Additional loss (dB)	0.0
o.	Body loss (dB)	3.0
p.	Airlink losses (not including facility path loss)	**19.0**
	Receiver	
q.	Mobile noise figure (dB)	7.0
r.	Thermal noise (dBm/Hz)	–174.0
s.	Receiver interference density (dBm/Hz)	–167.0
t.	Information ratio (dB/Hz)	41.6
u.	Required $Eb/(N_o+l_o)$	7.0
v.	Receive Sensitivity (dBm)	–118.4
w.	Minimum received signal (dBm)	**–99.4**
x.	**Maximum path loss** (dB)	**–99.4**

- b and c: see notes in Table 5-32 regarding power per carrier, downlink
- e = a + d
- f = c + d
- i = e + g + h
- j = f + g + h
- p = –k + l + m + n + o
- s = q + r
- v = s + t + u
- w = p + v
- x = j – w
- y = j (downlink) + m (uplink) + P

  where

  P = Ptx + Prx = –73 dB for Cellular
  –76 dB for PCS

Spread Spectrum Link Budget Analysis: Uplink

Line	Uplink	
	Receiver	
a.	BTS noise figure (dB)	3.0
b.	Attenuation between BTS and Unison (dB)	–30.0
c.	Unison gain (dB)	0.0
d.	Unison noise figure (dB)	22.0
e.	System noise figure (dB)	33.3
f.	Thermal noise (dBm/Hz)	–174.0
g.	Noise rise 75% loading (dB)	6.0
h.	Receiver interference density (dBm/Hz)	–134.6
i.	Information rate (dB/Hz)	41.6
j.	Required $Eb/(N_o+I_o)$	5.0
k.	Handoff gain (dB)	0.0
l.	Antenna gain (dBi)	3.0
m.	Minimum received signal (dBm)	**–91.1**
	Airlink	
n.	Multipath fade margin (dB)	6.0
o.	Log-normal fade margin with 8 dB std. deviation, edge reliability 90% (dB)	10.0
p.	Additional loss (dB)	0.0
q.	Body loss (dB)	3.0
r.	Airlink losses (not including facility path loss)	**19.0**
	Transmitter	
s.	Mobile transmit power (dBm)	28.0
t.	**Maximum path loss** (dB)	**100.1**

- e: enter the noise figure and gain of each system component (a, b, c, and d) into the standard cascaded noise figure formula

$$F_{sys} = F_1 + \frac{F_2 - 1}{G_1} + \frac{F_3 - 1}{G_1 G_2} + \ldots.$$

where

$F = 10^{(\text{Noise Figure}/10)}$

$G = 10^{(\text{Gain}/10)}$

(See Rappaport, Theodore S. *Wireless Communications, Principles, and Practice*. Prentice Hall PTR, 1996.)

- h = e + f + g
- m = h + i + j –k – l
- r = n + o + p + q
- t = s – r – m

5.4.5 Considerations for Re-Radiation (over-the-air) Systems

Unison can be used to extend the coverage of the outdoor network by connecting to a roof-top donor antenna that is pointed toward an outdoor base station. Additional considerations for such an application of Unison are:

- Sizing the gain and output power requirements for a bi-directional amplifier (repeater).
- Ensuring that noise radiated on the uplink from the in-building system does not cause the outdoor base station to become desensitized to wireless handsets in the outdoor network.
- Filtering out signals that lie in adjacent frequency bands. For instance, if you are providing coverage for Cellular B-band operation it may be necessary to filter out the A, A' and A" bands which may contain strong signals from other outdoor base stations.

Further information on these issues can be found in LGC Wireless' application notes for re-radiation applications.

5.5 Connecting a Main Hub to a Base Station

The first consideration when connecting Unison Main Hubs to a base station is to ensure there is an equal amount of loss through cables, combiners, etc. from the base station to the Main Hubs. For this example, assume that the base station will have simplex connections, one uplink and one downlink. Each of these connections will need to be divided to equilibrate power for each Main Hub. For example, two Main Hubs will require a 2×1 combiner/divider; four Main Hubs will require a 4×1 combiner/divider; and so on.

Figure 5-2 Connecting Main Hubs to a Simplex Base Station

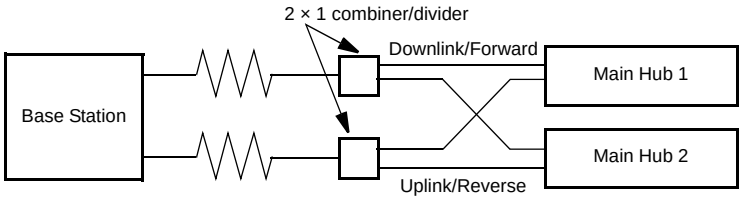

When connecting a Unison Main Hub to a base station, also consider the following:

1. The downlink power from the base station must be attenuated enough so that the power radiated by the RAU does not exceed the maximum power per carrier listed in **Section 5.1, "Maximum Output Power per Carrier at RAU," on page 5-3**.
2. The uplink attenuation should be small enough that the sensitivity of the overall system is limited by Unison, not by the attenuator. However, some base stations will trigger alarms if the noise or signal levels are too high. In this case the attenuation will have to be large enough to prevent this from happening.

If, in an area covered by Unison, a mobile phone indicates good signal strength but consistently has difficulty completing calls, it is possible that the attenuation between Unison and the base station needs to be adjusted. In other words, it is possible that if the uplink is over-attenuated, the downlink power will provide good coverage, but the uplink coverage distance will be small.

When there is an excessive amount of loss between the Main Hub uplink and the base station, the uplink system gain can be increased to as much as 15 dB to prevent a reduction in the overall system sensitivity.

5.5.1 Attenuation

Figure 5-3 shows a typical setup wherein a duplex base station is connected to a Main Hub. For a simplex base station, eliminate the circulator and connect the simplex ports of the base station to the simplex ports of the Main Hub. Add attenuators to regulate the power appropriately.

Figure 5-3 Main Hub to Duplex Base Station or Repeater Connections

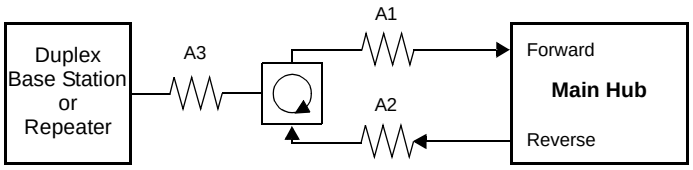

- A typical circulator has an IP3 of +70dBm. If you drive the circulator too hard it will produce intermods that are bigger than the intermods produced by Unison. The IP3 at the Forward port input of the Main Hub is approximately +38 dBm. The IP3 of the circulator at that same point (i.e., following attenuator A1) is +70dBm – A1. Thus, to keep the system IP3 from being adversely affected by the circulator, attenuator A1 should be no more than approximately +30 dB.
- A filter diplexer can be used in place of the circulator. The IP3 of the diplexer can be assumed to be greater than +100 dBm. If a diplexer is used, A3 can be omitted.
- A1+A3 should be chosen so that the output power per carrier at the RAU's output is correct for the number of carriers being transmitted. Suppose the base station transmits 36 dBm per carrier and it is desired that the RAU output be 6 dBm per carrier and the forward port gain is 0 dB. Then A1+A3=30 dB.
- A2+A3 should, ideally, be at least 10 dB less than the noise figure plus the gain of the Unison system. For example, if the reverse port has a 0 dB gain and if there are 32 RAUs, the noise figure is approximately 22 dB. So A2+A3 should be about 10 dB. If A2+A3 is too large, the uplink coverage can be severely reduced.
- Given these three equations:
  A1 < 30 dB
  A1+A3 = 30 dB (in this example)
  A2+A3 < 10 dB (in this example)
  we could choose A1=20 dB, A2=0 dB, A3=10 dB

5.5.2 Uplink Attenuation

The attenuation between the Main Hub's uplink port and the base station does two things:

1. It attenuates the noise coming out of Unison.
2. It attenuates the desired signals coming out of Unison.

Setting the attenuation on the uplink is a trade-off between keeping the noise and maximum signal levels transmitted from Unison to the base station receiver low while not reducing the SNR (signal-to-noise ratio) of the path from the RAU inputs to the base station inputs. This SNR can not be better than the SNR of Unison by itself, although it can be significantly worse.

For example, suppose we have a GSM Unison system consisting of one Hub and 8 RAUs (1-8) with uplink NF=22 dB. (See Table 5-32 on page 5-35.) If we use 30 dB of attenuation between the Main Hub's uplink port and the base station (which has its own noise figure of about 4 dB), the overall noise figure will be 34.3 dB (refer to the formula on page 5-33) which is 12.3 dB worse than Unison by itself. That causes a 12.3 dB reduction in the uplink coverage distance. Now, if the attenuation instead is 10 dB, the cascaded noise figure is NF=22.6 dB, which implies that the uplink sensitivity is limited by Unison, a desirable condition.

Rule of Thumb

A good rule of thumb is to set the uplink attenuation, A2+A3 in Figure 5-3 on page 5-43, as follows:

$$A2+A3 \approx \text{Unison uplink NF} + \text{uplink gain (0 dB for reverse port)} - \text{BTS NF} - 10\text{dB}$$

and round A2 *down* to the nearest convenient attenuation value.

5.5.2.1 Uplink Attenuation Exception: CDMA

In CDMA systems, the power transmitted by the mobile is determined by the characteristics of both the uplink and downlink paths. The power transmitted by the mobile should be similar in open-loop control (as determined by the downlink path) as during closed-loop control (as determined by the uplink and downlink paths). In addition, the mobile's transmit power when it communicates with a base station through Unison should be similar to the power transmitted when it communicates with a base station in the outdoor network (during soft hand-off). Because of these considerations, you should not allow the downlink and uplink gains to vary widely.

Open-loop power control:

$$P_{TX} = -76 \text{ dBm (for PCS)} - P_{RX}$$

where P_{TX} is the power transmitted and P_{RX} is the power received by the mobile. If PL is the path loss (in dB) between the RAU and the mobile, and P_{DN} is the downlink power radiated by the RAU, then

$$P_{TX} = -76 \text{ dBm (for PCS)} - P_{DN} + PL$$

Closed-loop power control:

$$\begin{aligned} P_{TX} &= \text{noise floor} + \text{uplink NF} - \text{process gain} + Eb/No + PL \\ &= -113 \text{ dBm/1.25 Mhz} + NF - 19 \text{ dB} + 7 \text{ dB} + PL \end{aligned}$$

where Eb/No = 7 dB is a rough estimate, and NF is the cascaded noise figure of the Unison uplink, the uplink attenuation, and the base station noise figure. Equating P_{TX} for the open-loop and closed-loop we see that

$$NF = 49 - P_{DN}$$

where P_{DN} is determined by the downlink attenuation. Since P_{DN} for Unison is about 10 dBm, we see that the cascaded noise figure is about 39 dB, which is considerably higher than that of Unison itself. This implies that we should use a fairly large attenuation on the uplink. This case suggests using as much attenuation on the downlink as on the uplink. The drawback of doing this is that the uplink coverage sensitivity is reduced. A link budget analysis will clarify these issues. Typically, the uplink attenuation between the Main Hub and the base station will be the same as, or maybe 10 dB less than, the downlink attenuation.

5.6 Designing for a Neutral Host System

Designing for a neutral host system uses the same design rules previously discussed. Since a neutral host system typically uses *multiple systems in parallel* with common equipment locations, we find it best to design according to the minimum among the systems' RAU coverage distances so that there will not be holes in the coverage area, and so that the economies of a single installation can be achieved. For example, as indicated in Section 7.1, the 1900 MHz RF signals do not propagate throughout a building as well as the 800 MHz signals. Therefore, we design using the 1900 MHz radiated distance, calculated with the path loss slope formula.

The example neutral host system described below consists of one iDEN, one 800 MHz, and two 1900 MHz systems and can support up to seven separate service providers in the following manner:

- 1 on iDEN
- 2 on 800 MHz, A band and B band
- 2 in each of the two 1900 MHz frequency sub-bands

Example Unison Neutral Host System

The following example configuration was designed to provide:

- Similar coverage per band in an office environment that is 80% cubicles and 20% offices.
- Similar capacity.
- Support for up to 7 Operators, where equipment has been shared to minimize the number of parallel systems.

Example Configuration:

- 800 MHz iDEN: 16 channels (3 dBm)
- 800 MHz Cellular (3 dBm)

  TDMA Band: 14 channels (shared)

  CDMA Band: 3 channels (shared)
- 1900 MHz PCS (6 dBm)

  TDMA Band: 14 channels

  CDMA Band: 3 channels (shared)

  GSM Band: 6 channels (shared)

Similar coverage is achieved by setting the transmit power per carrier of the 800 MHz systems to 3 dBm per carrier and those of the 1900 MHz systems to 6 dBm per carrier.

The numbers of RF carriers were selected in order to match subscriber capacity approximately. Because each protocol in the example supports a different number of voice channels, the RF carrier numbers also differ. As the following table indicates, the 800 MHz Cellular and shared 1900 MHz systems can support additional RF carriers without decreasing the power per carrier figures.

For logistical reasons, Operators involved in a neutral host system sometimes prefer not to share equipment with other Operators. From technical and economic perspectives, too, this can be a prudent practice in medium to high-capacity installations. Though deploying parallel systems appears to increase the amount of equipment needed as well as the system cost, the trade-off between capacity and coverage must be considered because, in short, as capacity increases, coverage area per RAU decreases. Therefore, more RAUs (and perhaps Hubs) are needed to cover a given floor space.

The following table shows the capacities of both 800 and 1900 MHz Unison systems used for single and multiple protocol applications. The power per carrier for each system is based on providing equal coverage areas for both systems when they are used in an office building that is 80% cubicles and 20% offices.

Table 1 Unison Capacity: Equal Coverage Areas

Operator #1				Operator #2			
Protocol	**RF Chs**	**Voice Chs**	**Subscribers**	**Protocol**	**RF Chs**	**Voice Chs**	**Subscribers**
800 MHz Cellular A/B (Unison); 3 dBm power per carrier							
TDMA only	35	104	1837	**N/A**	—	—	—
CDMA only	12	180–240	3327–4517	**N/A**	—	—	—
TDMA (combining with CDMA: Operator #2)	15	44	694	**CDMA** (combining with TDMA: Operator #1)	10	150–200	2736–3723
	20	59	974		7	105–140	1856–2540
	25	74	1259		4	60–80	993–1374
	28	83	1431		2	30–40	439–620
800 MHz iDEN (Unison); 3 dBm power per carrier							
iDEN only	16	47	749	**N/A**	—	—	—
1900 MHz PCS (Unison); 6 dBm power per carrier							
TDMA only	14	41	638	**N/A**	—	—	—
CDMA only	10	150–200	2736–3723	**N/A**	—	—	—
GSM only	14	111	1973	**N/A**	—	—	—
TDMA (combining with CDMA: Operator #2)	6	17	213	**CDMA** (combining with TDMA: Operator #1)	4	60–80	993–1374
	8	23	315		3	45–60	712–993
	10	29	421		2	30–40	439–620
	11	32	474		1	15–20	180–264
TDMA (combining with GSM: Operator #2)	6	17	213	**GSM** (combining with TDMA: Operator #1)	7	55	899
	8	23	315		5	39	602
	10	29	421		3	23	315
	11	32	474		2	15	180
CDMA (combining with GSM: Operator #2)	2	30–40	439–620	**GSM** (combining with CDMA: Operator #1)	10	79	1355
	4	60–80	993–1374		7	55	899
	6	90–120	1566–2148		4	31	457
	8	120–200	2148–2933		1	7	59

Note 1

The RF channel capacity limits are based on the Unison data sheets' "typical" specifications for Cat-5 length and RF performance.

Note 2

The subscriber capacity limits are based on the Erlang B traffic model with a 2% GOS. Each user has a 50mErlangs, which is higher than the standard 35mErlangs.

SECTION 6

Installing Unison Accel

6.1 Installation Requirements

6.1.1 Component Location Requirements

Unison Accel components are intended to be installed in indoor locations only.

6.1.2 Cable and Connector Requirements

The Accel equipment operates over Category 5 or 6 (Cat-5/6) screened twisted pair (ScTP) cable with shielded RJ-45 connectors. These cables are widely used industry standards for Local Area Networks (LANs). The regulations and guidelines for Unison cable installation are identical to those specified by the TIA/EIA 568-A standard and the TIA/EIA/IS-729 supplement for LANs.

LGC Wireless recommends plenum-rated Cat-5/6 ScTP cable and connectors for conformity to building codes and standards. Mohawk/CDT 55986 or Belden 1624P DataTwist® Five ScTP cable, or equivalent is required.

NOTE: In order to meet FCC and CE Mark emissions requirements, the Cat-5/6 cable must be screened (ScTP) and it must be grounded using shielded RJ-45 connectors at both ends.

6.1.3 Multiple Operator System Recommendations

As in any Unison Accel system, a multiple operator (neutral host) system requires one Cat-5/6 cable between each Accel Hub and each RAU. In situations where Hubs and/or RAUs will be installed in the future to support the addition of frequency bands and/or wireless Operators, it is advantageous to install the necessary cabling initially. Such deployment typically leads to substantial cost savings over installing parallel cabling at separate times.

6.1.4 Distance Requirements

The following table shows the distances between Unison components and related equipment.

Table 6-1 Distance Requirements

Equipment Combination	Cable Type	Cable Length	Additional Information
Repeater to Accel Hub	Coaxial; N male connectors	3–6 m (10–20 ft) typical 10 m (33 ft) maximum	Limited by loss and noise. Refer to your link budget calculation. Limited by CE Mark requirements.
Base Station to Accel Hub	Coaxial; N male connectors	3–6 m (10–20 ft) typical 10 m (33 ft) maximum	Limited by loss and noise. Refer to your link budget calculation. Limited by CE Mark requirements.
Accel Hub to RAU	Cat-5/6 ScTP; shielded RJ-45 male connectors	• Minimum: 10 meters (33 ft) • Recommended Max.: 100 meters (328 ft) • Absolute Max.: 150 meters (492 ft) See Section 6.4.4 if using a Cat-5 Extender	See “System Gain (Loss) Relative to ScTP Cable Length” on page 5-28.
RAU to passive antenna	Coaxial; SMA male connectors	1–3.5 m (3–12 ft) typical	Limited by loss and noise. Refer to your link budget calculation.

6.2 Safety Precautions

6.2.1 Installation Guidelines

Use the following guidelines when installing LGC Wireless equipment:

1. Provide sufficient airflow and cooling to the equipment to prevent heat build-up from exceeding the maximum ambient air temperature specification. Do not compromise the amount of airflow required for safe operation of the equipment.
2. If you are removing the system, turn it off and remove the power cord first. There are no user-serviceable parts inside the components.
3. The internal power supplies have internal fuses that are not user replaceable. Consider the worst-case power consumption shown on the product labels when provisioning the equipment's AC power source and distribution.

6.2.2 General Safety Precautions

The following precautions apply to LGC Wireless products:

- The units have no user-serviceable parts. Faulty or failed units are fully replaceable through LGC Wireless. Please contact us at:

  1-800-530-9960 (U.S. only)
  +1-408-952-2400 (International)
  +44(0) 1223 597812 (Europe)
- Although modeled after an Ethernet/LAN architecture and connectivity, the units are not intended to connect to Ethernet data hubs, routers, cards, or other similar data equipment.
- When you connect a radiating antenna to an RAU, firmly hand-tighten the SMA female connector – DO NOT over-tighten the connector.

WARNING: To reduce the risk of fire or electric shock, do not expose this equipment to rain or moisture. The components are intended for indoor use only. Do not install the RAU outdoors. Do not connect an RAU to an antenna that is located outside where it could be subject to lightning strikes, power crosses, or wind.

6.3 Preparing for System Installation

6.3.1 Pre-Installation Inspection

Follow this procedure before installing Unison Accel equipment:

1. Verify the number of packages received against the packing list.
2. Check all packages for external damage; report any external damage to the shipping carrier. If there is damage, a shipping agent should be present before you unpack and inspect the contents because damage caused during transit is the responsibility of the shipping agent.
3. Open and check each package against the packing slip. If any items are missing, contact LGC Wireless customer service.
4. If damage is discovered at the time of installation, contact the shipping agent.

6.3.2 Installation Checklist

Table 6-2 Installation Checklist

✓	Installation Requirement	Consideration
	Floor Plans	Installation location of equipment clearly marked
	System Design	Used to verify frequency bands after installation
	Power available: Accel Hub (AC) To RAU (DC)	Power cord is 2 m (6.5 ft) long. 115/230V, 5.5/3A, 50–60 Hz 36V (from the Hub)
	Rack space available	133.5 mm (5.25 in.) high (3U)
	Clearance for air circulation: Accel Hub RAU	 76 mm (3 in.) front and rear, 51 mm (2 in.) sides 76 mm (3 in.) all around
	Suitable operating environment: Accel Hub RAUs	Indoor location only 0° to +45°C (+32° to +113°F) 5% to 95% non-condensing humidity –25° to +45°C (–13° to +113°F) 5% to 95% non-condensing humidity
	Donor Antenna-to-Unison Configuration	
	Donor Antenna	Installed, inspected; N-male to N-male coaxial cable to lightning arrestor/surge suppressor
	Lightning Arrestor or Surge Suppressor	Installed between roof-top antenna and repeater; N-male to N-male coaxial cable
	Repeater	Installed between lightning arrestor/surge suppressor and Hub; N-male to N-male coaxial cable
	Attenuator	Installed between the circulator and the Hub downlink port to prevent overload. Optionally, it may be installed between the uplink port and the circulator
	Circulator or Duplexer	Installed between the repeater and the Hub uplink and downlink ports
	Base Station-to-Unison Configuration	
	Base Station	Verify RF power (see tables in Section 5.1 on page 5-3); N-male to N-male coaxial cable; installed, inspected
	Attenuator	Attenuation may be required to achieve the desired RF output at the RAU and the desired uplink noise floor level
	Circulator or Duplexer	When using a duplex BTS: Installed between the BTS and the Hub uplink and downlink ports. Not used with a simplex BTS

Table 6-2 Installation Checklist (continued)

✓	Installation Requirement	Consideration
	Connecting LGCell Main Hub(s) to a Unison Main Hub	
	5-port Alarm Daisy-Chain Cable (PN 4024-3)	For contact alarm monitoring: connecting 2 to 21 LGCell Main Hubs to a Unison Accel Hub If connecting LGCell to Unison Accel, the Alarm Sense Adapter Cable is required to connect the daisy-chain cable to Unison Do not combine LGCell Main Hubs with Unison Accel Hubs in the same daisy chain
	Alarm Sense Adapter Cable (PN 4024-3)	Use with 5-port Alarm Daisy-Chain Cable to connect up to 21 LGCell Main Hubs to a Unison Accel Hub Also, use to connect a single LGCell Main Hub to a Unison Accel Hub
	Connecting Multiple Unison Accel Hubs Together	
	5-port Alarm Daisy-Chain Cable (PN 4024-3)	For contact alarm monitoring of major and minor alarms. Use to feed the alarms from multiple Unison Accel Hubs into a BTS or MetroReach Focus Do not combine Unison Accel Hubs with LGCell Main Hubs in the same chain.
	Cabling	
	Coaxial: repeater or base station to Accel Hub	Coax approved; N-type male connectors
	Coaxial: RAU to passive antennas	Use low-loss cable; SMA male connector; typical 1 m (3.3 ft) using RG142 coaxial cable
	Cat-5/6 ScTP:	TIA/EIA 568-A approved; shielded RJ-45 male connectors. ScTP cable must be screened and it must be grounded at both connector ends Tie-off cables to avoid damaging the connectors because of cable strain
	Accel Hub to RAUs	• Minimum: 10 meters (33 ft) • Recommended Maximum: 100 meters (328 ft) • Absolute Maximum: 150 meters (492 ft)
	Accel Hub to Cat-5 Extender to RAU	**Minimum Cat-5/6 Cable Length from Accel Hub to Extender** / **Minimum Cat-5/6 Cable Length from Extender to RAU** / **Maximum Total Cat-5/6 Cable Length from Accel Hub to RAU** 90 meters / 20 meters / 110 to 170 meters 295 feet / 65 feet / 360 to 557 feet
	Configuring System	
	PC/laptop running AdminManager software	Refer to the *AdminManager User Manual* (PN 8810-10)
	Miscellaneous	
	Null modem cable	Female connectors; Accel Hub to a PC/laptop that is running the AdminManager software; local connection
	Straight-through cable	Female/male connectors; Accel Hub to a modem; remote connection

Table 6-2 Installation Checklist (continued)

✓	Installation Requirement	Consideration
	Cat-5 Extender	Used if Cat-5/6 run(s) exceed 100 meters
	Dual-Band Diplexer	Used in dual band systems to combine the output of a low-band RAU and a high-band RAU to a single dual band antenna
	Distances	
	Accel Hub is within 3–6m (10–20 ft) of connecting repeater	If longer distance, determine the loss of the cable used for this connection and adjust the RF signal into the Accel Hub accordingly. This can be done by read-justing the power from the base station, or by changing the attenuation value between the base station/repeater and the Hub
	Accel Hub is within 3–6m (10–20 ft) of connecting base station	

6.3.3 Tools and Materials Required

Table 6-3 Tools and Materials Required for Component Installation

✓	Description
	Cable ties
	Philips screwdriver
	Mounting screws and spring nuts
	Compressed air
	Screws, anchors (for mounting RAUs)
	Drill
	Fusion splicing sleeves

6.3.4 Optional Accessories

Table 6-4 Optional Accessories for Component Installation

✓	Description
	Wall-mount equipment rack(s) (PN 4712) Note that if using this rack with an Accel Hub, the Hub's mounting bracket must be moved to the center mounting position.
	Cable management (Cable manager: PN 4759; Tie wrap bar: PN 4757)
	Teltone Line Sharing Switch (M-394-B-01) When using a single POTS line with multiple Accel Hub/Modems: Connect up to four modems to a line sharing switch; can cascade switches to accommodate up to 16 modems per POTS line
	Alarm Cables: 5-port Alarm Daisy-Chain Cable (PN 4024-3) Alarm Sense Adapter Cable (PN 4025-1)
	RAU Dust Cover (PN UNS-1RDP-1)

6.4 Unison Accel Installation Procedures

The following procedures assume that the system is new from the factory and that it has not been programmed with a band.

If you are replacing components in a pre-installed system with either new units or units that may already be programmed (i.e., re-using units from another system), refer to Section 7.

- Installing an Accel Hub 6-10
  - Installing an Accel Hub in a Rack 6-10
  - Installing an Optional Cable Manager in the Rack 6-11
  - Connecting the AdminManager PC to the Accel Hub 6-12
  - Installing an Accel Hub in a Wall-Mounted Rack 6-11
  - Connecting the ScTP Cables 6-13
  - Troubleshooting Accel Hub LEDs During Installation 6-14
- Installing RAUs 6-15
  - Installing RAUs 6-15
  - Installing Passive Antennas 6-15
  - Connecting the Antenna to the RAU 6-15
  - Connecting the ScTP Cable 6-16
  - Troubleshooting RAU LEDs During Installation 6-16
  - Installing RAUs in a Dual Band System 6-17
  - Connecting the Antenna to the Dual Band Diplexer 6-18
- Configuring the System 6-20
  - Configuring the Installed System 6-20

The following procedures assume that the system is installed and programmed.

- Interfacing an Accel Hub to a Base Station or a Roof-top Antenna 6-21
  - Connecting an Accel Hub to an In-Building Base Station 6-21
  - Connecting an Accel Hub to Multiple Base Stations 6-23
  - Connecting an Accel Hub to a Roof-top Antenna 6-24
- Connecting Multiple Accel Hubs 6-25
  - Connecting Multiple Accel Hubs to a Simplex Repeater or Base Station . 6-25
  - Connecting Multiple Accel Hubs to a Duplex Repeater or Base Station . . 6-27
- Connecting Contact Alarms to an Accel System 6-29
  - Alarm Source 6-30
  - Alarm Sense 6-33
  - Alarm Cables 6-34
- Alarm Monitoring Connectivity Options 6-36
  - Direct Connection 6-36
  - Modem Connection 6-37
  - 232 Port Expander Connection 6-38
  - POTS Line Sharing Switch Connection 6-39
  - Ethernet and ENET/232 Serial Hub Connection 6-40

6.4.1 Installing an Accel Hub

CAUTION: Install Accel Hubs in indoor locations only.

Installing an Accel Hub in a Rack

The Accel Hub (3U high) mounts in a standard 19 in. (483 mm) equipment rack. Allow clearance of 76 mm (3 in.) front and rear, and 51 mm (2 in.) on both sides for air circulation. No top and bottom clearance is required.

Consideration:

- The Accel Hub is shipped with #10-32 mounting screws. Another common rack thread is #12-24. Confirm that the mounting screws match the rack's threads.

To install the hub in a rack:

1. Insert spring nuts into rack where needed or use existing threaded holes.
2. Place the Hub into the rack from the front.
3. Align the flange holes with the spring nuts installed in Step 1.
4. Insert the mounting screws in the appropriate positions in the rack.
5. Tighten the mounting screws.

Installing an Accel Hub in a Wall-Mounted Rack

Considerations:

- The rack and the Accel Hub are both 305 mm (12 in.) deep. The rack mounting brackets on the Accel Hub must be moved to the center mounting position to allow for the 76 mm (3 in.) rear clearance that is required.
- The maximum weight the rack can hold is 22.5 kg (50 lbs).

To install the Hub in a wall-mounted rack:

1. Attach the equipment rack to the wall using the screws that are provided.

   The rack must be positioned so that the Hub will be in a horizontal position when it is installed.
2. Remove both of the rack mounting brackets from the Hub.
3. Reattach each of the rack mounting brackets to the opposite side of the Hub from which it came.

   Refer to the following figure for bracket placement.

Need new photos

Right Rack Mounting Bracket as installed from the factory.

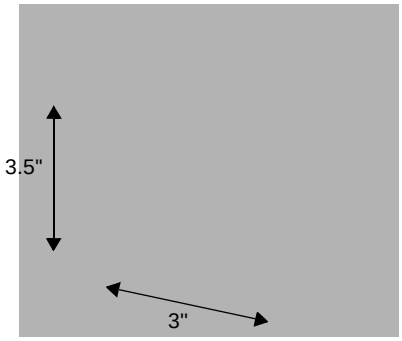

Left Rack Mounting Bracket installed on the right side of the hub.

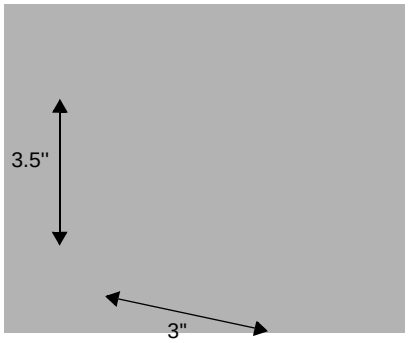

4. Attach the Hub to the rack.

Installing an Optional Cable Manager in the Rack

- Using the screws provided, fasten the cable manager to the rack, immediately above or below the Accel Hub.

Connecting the AdminManager PC to the Accel Hub

Considerations:

- The AdminManager software, described in the *AdminManager User Manual* (PN 8810-10), must be running on a PC/laptop that is connected to the Accel Hub's front panel **RS-232** port.
- Null modem cable with female connectors is required.

To connect the PC/laptop, start AdminManager, and power on the Hub:

1. Connect the null modem cable to the PC/laptop and then to the **RS-232** port on the Hub's front panel.
2. Turn on the PC and start AdminManager.

   The AdminManager main window is displayed with the Installation Wizard option selected.
3. Connect the AC power cord to the Hub.
4. Plug the power cord into an AC power outlet.

   Verify that all cables are properly connected on the Hub.
5. Turn on the power to the Hub.

   Upon initial power-up, the Main Hub LEDs should blink continuously to indicate that there is no frequency band programmed into the Hub.

   On subsequent power ups, after a band is programmed, the LEDs will blink for five seconds as a visual check that they are functioning.
6. Click NEXT if the message displayed indicates a successful test.

   The Finish window is displayed.
7. Click FINISH.

   The AdminManager session is ended and the window is closed.

NOTE: Refer to Section 8 for troubleshooting.

6.4.1.1 Installing Accel Hubs in a Multiple Operator System

Installing Accel Hubs in a multiple operator system is the same as described in Section 6.4.1 on page 6-10.

We recommend mounting all multiple operator system Accel Hubs in the same rack(s), grouped by frequency or wireless carrier. For example, group the Hubs for the 800 MHz cellular bands together, and so on.

Connecting to base stations and repeaters is the same as described in Section 6.5 on page 6-21 and Section 6.5.1 on page 6-25.

Connecting the ScTP Cables

Consideration:

- Verify that the cable has been tested and the test results are recorded.

To test and connect the ScTP cable:

1. Perform cable testing.

   Test results are required for the final As-Built Document.

   Cable length:

   – Minimum: 10 m (33 ft)

   – Recommended Maximum: 100 m (328 ft)

   – Absolute Maximum: 150 m (492 ft)
2. Label both ends of each cable with which RJ-45 port you're using.
3. Connect the ScTP cables to any available RJ-45 port on the Accel Hub.

   The **LINK** and **RAU** LEDs should be off because the RAU is not connected.
4. Record which cable you are connecting to which port.

   This information is required for the As-Built Document.
5. Tie-off cables or use the optional cable manager to avoid damaging the connectors because of cable strain.

6.4.1.2 Troubleshooting Accel Hub LEDs During Installation

- All Accel Hub **LINK** and **RAU** LEDs with RAUs connected should indicate Green/Red, which indicates that the RAU is powered on and communication has been established.
- The Accel Hub **STATUS** LED should be Green.

Table 6-5 Troubleshooting Accel Hub LEDs During Installation

During Installation	LED	State	Action	Impact
1. Accel Hub power is On and no RAUs are connected	**POWER**	Off	Check AC power; check that the Hub power-on switch is on; replace the Hub.	Hub is not powering on.
	LINK	LEDs on but didn't blink through all states	Replace the Hub.	Microcontroller not resetting properly; flash memory corrupted.
	RAU			
	LINK	Red	Port unusable; replace the Hub when possible.	Current sensor fault; do not use the port.
	RAU	Off		
	STATUS	Red, after power-up blink		
	STATUS	Red from green after 90 seconds of power-up blink, cable was connected within 90 seconds of power up		
	STATUS	Red		
2. Accel Hub power is On and RAUs are connected	**LINK**	Off	Check the Cat-5/6 cable.	Power is not getting to the RAU.
	RAU	Off		
	LINK	Red	Test the Cat-5/6 cable. If the cable tests OK, try another port. If the second port's LEDs are Red/Off, replace the RAU. If the second RAU doesn't work; replace the Accel Hub.	Power levels to RAU are not correct; communications are not established. If the second port works, flag the first port as unusable; replace Hub when possible.
	RAU	Off		
	LINK	Green	Use AdminManager to determine the problem.	RAU is off-line.
	RAU	Red		

6.4.2 Installing RAUs

CAUTION: Install RAUs in indoor locations only. Do not connect an antenna that is installed in an outdoor location to an RAU.

Installing RAUs

Mount all RAUs in the locations marked on the floor plans.

Considerations:

- **Install iDEN and 800 MHz cellular RAUs so that their antennas will be at least 6 to 8 meters (20 to 26 feet) apart. Separation is required to reduce signal interference between the two frequency bands.**
- Attach the RAU securely to a stationary object (i.e., wall, pole, ceiling tile).
- For proper ventilation:
  - Keep at least 76 mm (3 in.) clearance around the RAU to ensure proper venting. Do not stack RAUs on top of each other.
  - Always mount the RAU with the unpainted face against the mounting surface.

Installing Passive Antennas

Refer to the manufacturer's installation instructions to install passive antennas.

Passive antennas are usually installed below the ceiling. If they are installed above the ceiling, the additional loss due to the ceiling material must be considered when estimating the antenna coverage area.

Considerations:

- **Install iDEN and 800 MHz cellular RAUs so that their antennas will be at least 6 to 8 meters (20 to 26 feet) apart. Separation is required to reduce signal interference between the two frequency bands.**

Connecting the Antenna to the RAU

Connect a passive antenna to the SMA male connector on the RAU using coaxial cable with the least amount of loss possible.

CAUTION: Firmly hand-tighten the SMA female connector – DO NOT over-tighten the connector.

Connecting the ScTP Cable

Consideration:

- Verify that the cable has been tested and the test results are recorded.

To connect the ScTP cable:

- Connect the cable to the RJ-45 female port on the RAU.

  Power is supplied by the Accel Hub. Upon power up, the LEDs will blink for two seconds as a visual check that they are functioning. After the two-second test:

  - The **LINK** LED should be green indicating that it is receiving power and communications from the Accel Hub.
  - The **ALARM** LED should be red until the Accel Hub issues the band command, within about 20 seconds, then it should be green.

6.4.2.1 Troubleshooting RAU LEDs During Installation

- The **LINK** and **ALARM** LEDs should be green.

Table 6-6 Troubleshooting RAU LEDs During Installation

During Installation	LED	State	Action	Impact
1. RAU is connected to Accel Hub, which is powered on	**LINK**	Off	Check Cat-5/6 cable.	No power to RAU.
	ALARM	Off		
	LINK	Green	• Check Cat-5/6 cable • Check Hub LEDs See page 6-14, item 2 in Table 6-5. • Use AdminManager to determine the problem.	RAU is off-line.
	ALARM	Red		
	LINK	Red from green, after cables are connected for 60 seconds	• Check Cat-5/6 cable • Check Hub LEDs • Use AdminManager to determine the problem.	No communications between the RAU and the Hub.
	ALARM	Red		

6.4.2.2 Installing RAUs in a Multiple Operator System

When installing both iDEN and Cellular systems in parallel, either as dual-band or multiple operator systems, special provision must be taken to assure that the individual RAUs do not interfere with each other.

The 800 MHz Cellular and iDEN RAU's antennas must be separated by 6 to 8 meters (20 to 26 feet) to assure that the iDEN downlink signals do not interfere with the Cellular uplink signals.

6.4.3 Installing Dual Band RAU Configuration

CAUTION: Install RAUs and diplexers in indoor locations only. Do not connect an antenna that is installed in an outdoor location.

Dual band RAU configuration consists of:

- 1 higher band RAU
- 1 lower band RAU
- 1 Dual-Band Diplexer (PN #DIPX1-1)
- 2 coaxial cables, 3 ft. long (PN #4005-3)

Installing RAUs in a Dual Band System

A Dual-Band Diplexer is used to combine the output of a low-band RAU and a high-band RAU to a single dual band antenna.

Considerations:

- The Diplexer will have a high loss if it is connected incorrectly. When using it with the Unison system, incorrect connections may trigger the Antenna Disconnect alarm.
- When using the Dual-Band Diplexer, the Unison system Antenna Disconnect alarm can detect if the cable is disconnected or cut between the RAU and the Diplexer. This alarm, however, cannot detect if the cable is disconnected or cut between the Diplexer and the antenna.

Figure 6-1 shows the RAU configuration in a dual band system. It consists of two RAUs, one for upper band and one for lower band, a diplexer and two 3 ft. coaxial cables.

Figure 6-1 Dual Band RAU Configuration

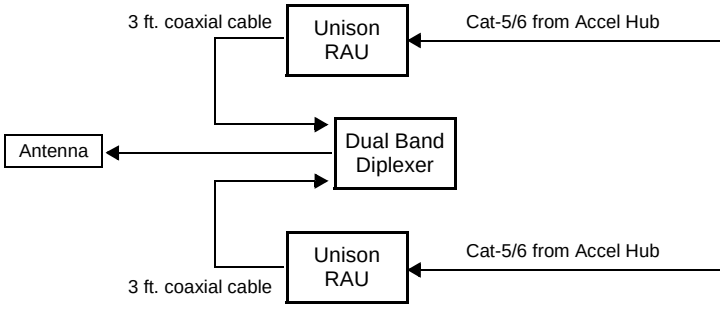

To connect the RAUs and Dual Band Diplexer for a dual band system:

1. Attach the Diplexer to a stable surface (i.e., wall, ceiling tile, pole).
   Do not mount the Diplexer on top of an RAU.
2. Attach the two Unison RAUs to a stable surface within 2.5 ft.
   of the Diplexer (do not stack the RAUs on top of each other).
3. Verify that the Unison system is powered on.
4. The green LED on both of the RAUs should be lit.
5. Connect a coaxial cable to the antenna ports on each of the Unison RAUs.
6. The recommended coaxial cable (PN 4005-3) is 3 ft. long.
7. Connect the coaxial cable coming from the Unison lower band system (i.e., system band below 1 GHZ) into the Diplexer port labeled “LOWER BAND.”
8. Connect the coaxial cable coming from the Unison upper band system (i.e., system band above 1 GHZ) into the Diplexer port labeled “UPPER BAND.”
9. Connect a coaxial cable from the dual band antenna into the Diplexer port labeled “ANTENNA.”

Connecting the Antenna to the Dual Band Diplexer

Connect a single passive antenna to the Dual Band Diplexer’s “Antenna” SMA connector using coaxial cable with the least amount of loss possible.

CAUTION: Firmly hand-tighten the SMA female connector – DO NOT over-tighten the connector.

6.4.4 Installing Cat-5 Extender

The Cat-5 Extender (PN #UNS-EX170-1) increases the maximum length of the Cat-5/6 ScTP cable run that connects the Accel Hub to the RAU from 100 meters to 170 meters. The minimum cable length between the Hub and Extender is 90 meters and the minimum length between the Extender and RAU is 20 meters. Beyond the minimum lengths, an additional 60 meters of cable, maximum of 170 meters total, can be inserted before or after the Extender.

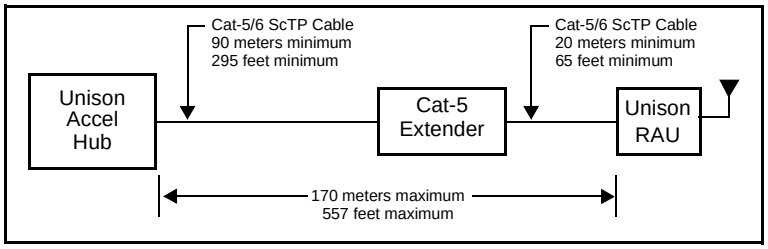

Considerations:

- Ensure that the following minimum and maximum cable lenghs are met:

Min. Cat-5/6 Cable Length from Accel Hub to Extender	Min. Cat-5/6 Cable Length from Extender to RAU	Max. Cat-5/6 Cable Length from Accel Hub to RAU
90 meters	20 meters	110 to 170 meters
295 feet	65 feet	360 to 557 feet

To install a Cat-5 Extender:

1. Attach the Cat-5 Extender securely to a stationary object (i.e., wall, pole, ceiling tile).
2. Attach the Cat-5/6 cable that is coming from the Accel Hub to the **TO UNISON SYSTEM** connector on the Extender.

   If the green LED lights on the Extender, then you have correctly connected the Cat 5/6 cable that is connected to the Accel Hub.

   If the LED does not light, then you may not have connected the cable at the Accel Hub. If the cable is connected and the LED still does not light, then the Unison system may not be powered on, the Cat-5 cable may be cut/broken, or there is a problem with the Extender.

   Verify that the Accel Hub is connected to AC power and the power switch is in the ON position.
3. Attach the Cat-5/6 cable that is coming from the RAU to the **TO UNISON RAU** connector on the Extender.

   CAUTION: *Do not insert the RAU cable into the Extender until the green LED on the Extender lights. Otherwise, you may damage the RAU.*

6.4.5 Configuring the System

Configuring the Installed System

Considerations:

- The AdminManager PC/laptop is connected to the Main Hub.
- The AdminManager software is started.
- All system components are installed and powered on.

To configure an installed system:

1. Select the Installation Wizard (Local) radio button from the AdminManager main window and click RUN.

   The Step 1, Verify Hardware window is displayed.
2. Verify that all system devices are displayed in the System Status box and click NEXT.

   The Step 2, Set Operation Band window is displayed.
3. Click NEXT.

   The Step 3, Configure System Parameters window is displayed.
4. Enter the desired parameters and click APPLY.
5. Click NEXT if the message that is displayed indicates that the parameter setting is successful.

   The Step 4, Final System Test window is displayed.
6. Click APPLY to initiate the final system test.

   During testing the system is off-line and a center band tone is being transmitted.
7. Click NEXT if the message that is displayed indicates that the testing is successful.

   The Finish window is displayed.
8. Click FINISH.

   The AdminManager session is ended and the window closes.

   All of the Main Hub's LEDs should be green.

6.5 Interfacing an Accel Hub to a Base Station or a Roof-top Antenna

WARNING: Exceeding the maximum input power could cause failure of the Accel Hub (refer to Section 5.1 on page 5-3 for maximum power specifications). If the maximum composite power is too high, attenuation is required.

Connecting an Accel Hub to an In-Building Base Station

Connecting a Simplex Base Station to an Accel Hub:

1. Connect an N-male to N-male coaxial cable to the transmit simplex connector on the base station.
2. Connect the other end of the N-male to N-male coaxial cable to the **DOWNLINK** connector on the Hub.
3. Connect an N-male to N-male coaxial cable to the receive simplex connector on the base station.
4. Connect the other end of the N-male to N-male coaxial cable to the **UPLINK** connector on the Hub.

Figure 6-2 Simplex Base Station to an Accel Hub

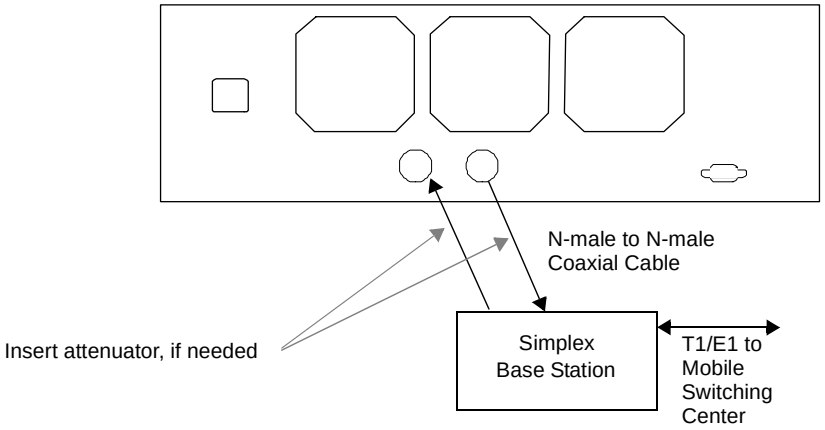

Connecting a Duplex Base Station to an Accel Hub:

When connecting to a duplex base station, use a circulator between it and the Accel Hub.

You can insert attenuators between the circulator and Hub as needed; refer to Section 5.5.1 on page 5-43 for more information.

1. Connect an N-male to N-male coaxial cable to the duplex connector on the base station.
2. Connect the other N-male connector to a circulator.
3. Connect an N-male to N-male coaxial cable to the **DOWNLINK** connector on the Hub.
4. Connect the other end of the N-male coaxial cable to the transmit connector on the circulator.
5. Connect an N-male to N-male coaxial cable to the **UPLINK** connector on the Hub.
6. Connect the other end of the N-male coaxial cable to the receive connector on the circulator.

Figure 6-3 Duplex Base Station to an Accel Hub

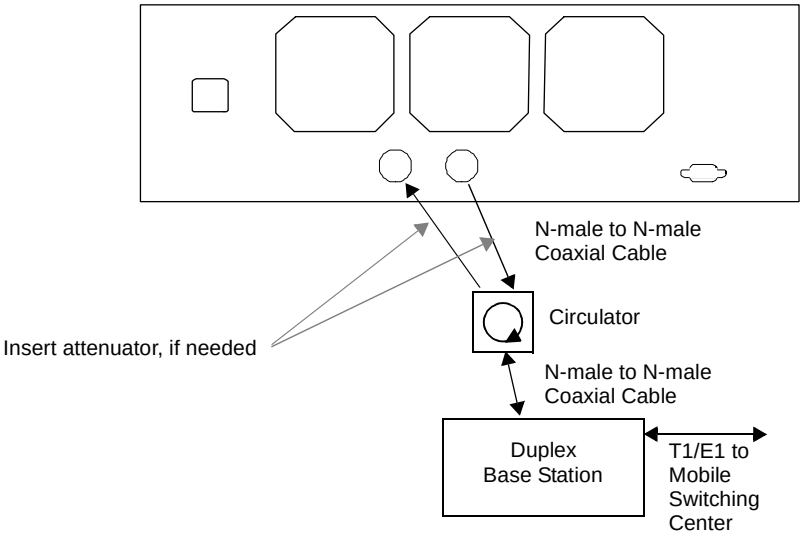

Connecting an Accel Hub to Multiple Base Stations

You can use power combiner/splitters to connect an Accel Hub to multiple base stations, as shown in the following figure.

Figure 6-4 Connecting an Accel Hub to Multiple Base Stations

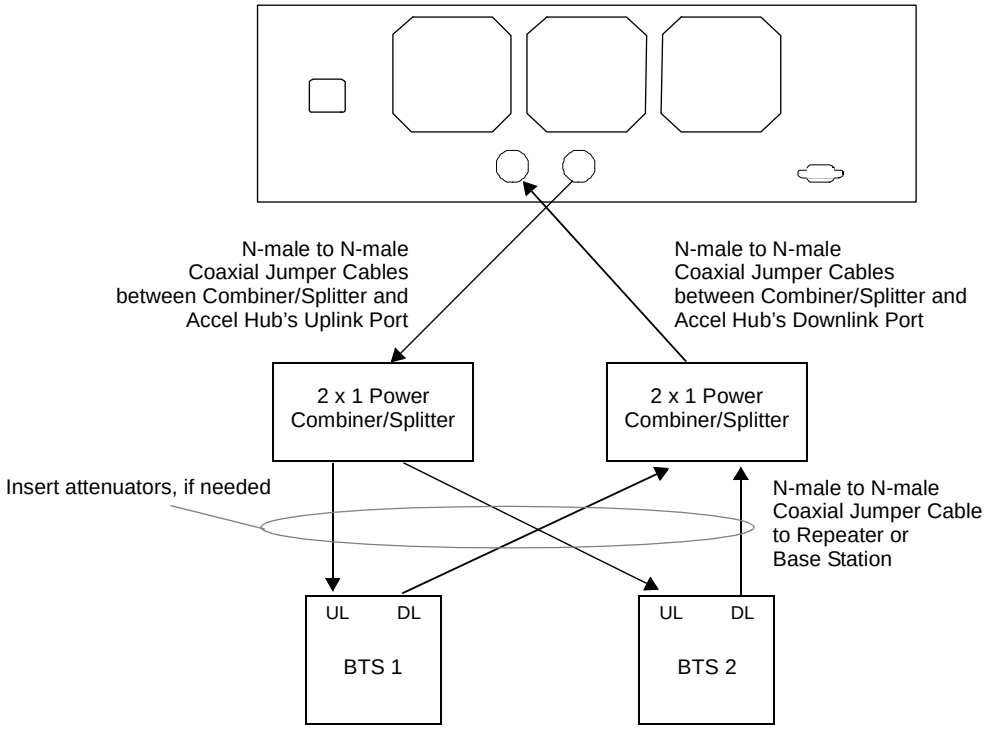

Connecting an Accel Hub to a Roof-top Antenna

It is recommended that you use a lightning arrestor or surge protector in a roof-top antenna configuration. Insert the lightning arrestor or surge protector between the roof-top antenna and the repeater that is connected to the Accel Hub.

1. Connect an N-male to N-male coaxial cable to the roof-top antenna.
2. Connect the other end of the N-male to N-male coaxial cable to the grounded surge suppressor.
3. Connect an N-male to N-male coaxial cable to the grounded surge suppressor.
4. Connect the other end of the N-male to N-male coaxial cable to the repeater.
5. Connect an N-male to N-male coaxial cable to the repeater.
6. Connect the other end of the N-male to N-male coaxial cable to the circulator **1** connector.
7. Connect an N-male to N-male coaxial cable to the circulator **2** connector.
8. Connect the other end of the N-male to N-male coaxial cable to the **DOWNLINK** connector on the Hub.

   Attenuation may be required to achieve the desired RF output at the RAU.
9. Connect an N-male to N-male coaxial cable to the circulator **3** connector.
10. Connect the other end of the N-male to N-male coaxial cable to the **UPLINK** connector on the Hub.

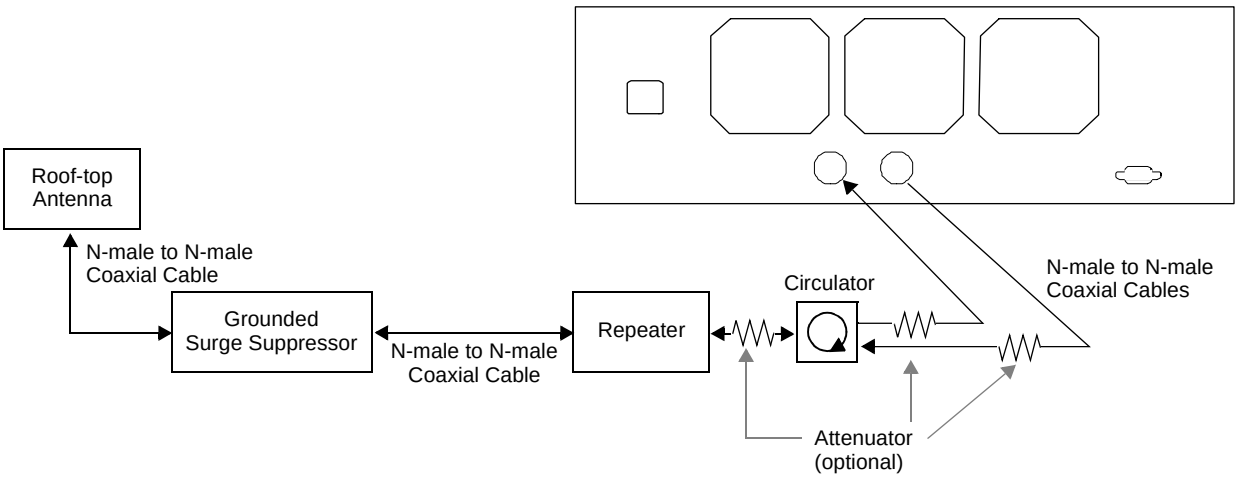

6.5.1 Connecting Multiple Accel Hubs

You can use power combiner/splitters as splitters to connect multiple Accel Hubs in order to increase the total number of RAUs in a system. You can also use power combiner/splitters to combine base station channels in order to increase the number of RF carriers the system transports.

Connecting Multiple Accel Hubs to a Simplex Repeater or Base Station

Considerations:

- 2 hybrid power combiner/splitters; one for uplink and one for downlink (2x1 for two Accel Hubs, 3x1 for three, 4x1 for four, etc.)
- 1 N-male to N-male coaxial jumper cable between each power combiner/splitter and the base station
- 2 N-male to N-male coaxial jumper cables between each power combiner/splitter and each Accel Hub

Procedure:

1. Connect the power combiner/splitters to the repeater or base station using N-male to N-male coaxial jumper cables:
   b. From the first power combiner/splitter to the repeater or base station
   c. From the second power combiner/splitter to the repeater or base station
2. Connect the power combiner/splitters to the Hubs:
   a. From the first Hub's **UPLINK** port to the first power combiner/splitter
   b. From the first Hub's **DOWNLINK** port to the second power combiner/splitter
   c. From the second Hub's **UPLINK** port to the first power combiner/splitter
   d. From the second Hub's **DOWNLINK** port to the second power combiner/splitter
3. Check Hub LEDs.

   After connecting and powering on the Hub, check all LEDs to ensure that the system is operating properly.

NOTE: Use a 50 ohm terminator on any unused power combiner/splitter ports.

The following figure shows connecting two Hubs to a simplex repeater or base station. Connecting two Hubs increases the total number of supportable RAUs from 8 to 16.

Figure 6-5 Connecting Two Accel Hubs to a Simplex Repeater or Base Station

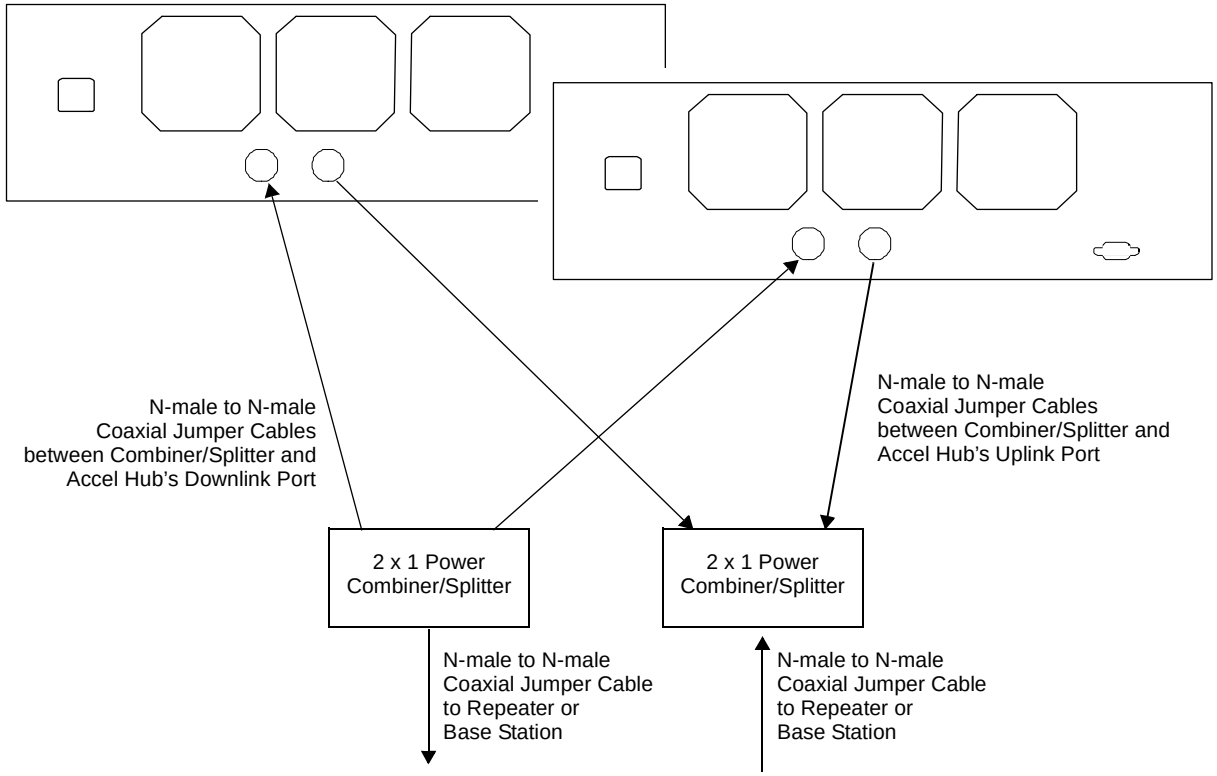

Connecting Multiple Accel Hubs to a Duplex Repeater or Base Station

Considerations:

- 2 hybrid power combiner/splitters; one for uplink and one for downlink (2x1 for two Accel Hubs, 3x1 for three, 4x1 for four, etc.)
- 2 N-male to N-male coaxial jumper cables to connect each Accel Hub to the power combiner/splitters
- 1 circulator
- 1 N-male to N-male coaxial jumper cable between each circulator and the repeater or base station
- 1 N-male to N-male coaxial jumper cable1 between each circulator and power combiner/splitter

Procedure:

1. Connect the Circulator to the power combiner/splitters and to the repeater or base station using one N-male to N-male coaxial jumper cable.
2. Connect each power combiner/splitter to the circulator using one N-male to N-male coaxial jumper cable.
3. Connect the power combiner/splitter to the Hubs:
   a. From the first Hub's **UPLINK** port to the first power combiner/splitter
   b. From the first Hub's **DOWNLINK** port to the second power combiner/splitter
   c. From the second Hub's **UPLINK** port to the first power combiner/splitter
   d. From the second Hub's **DOWNLINK** port to the second power combiner/splitter
4. Check Hub LEDs.

   After connecting and powering on the Hub, check all LEDs to ensure that the system is operating properly.

NOTE: Use a 50 ohm terminator on any unused power combiner/splitter ports.

To connect two Hubs to a duplex repeater or base station, you need to use one circulator and one more coaxial jumper cable, as shown in the following figure.

Figure 6-6 Connecting Two Accel Hubs to a Duplex Repeater or Base Station

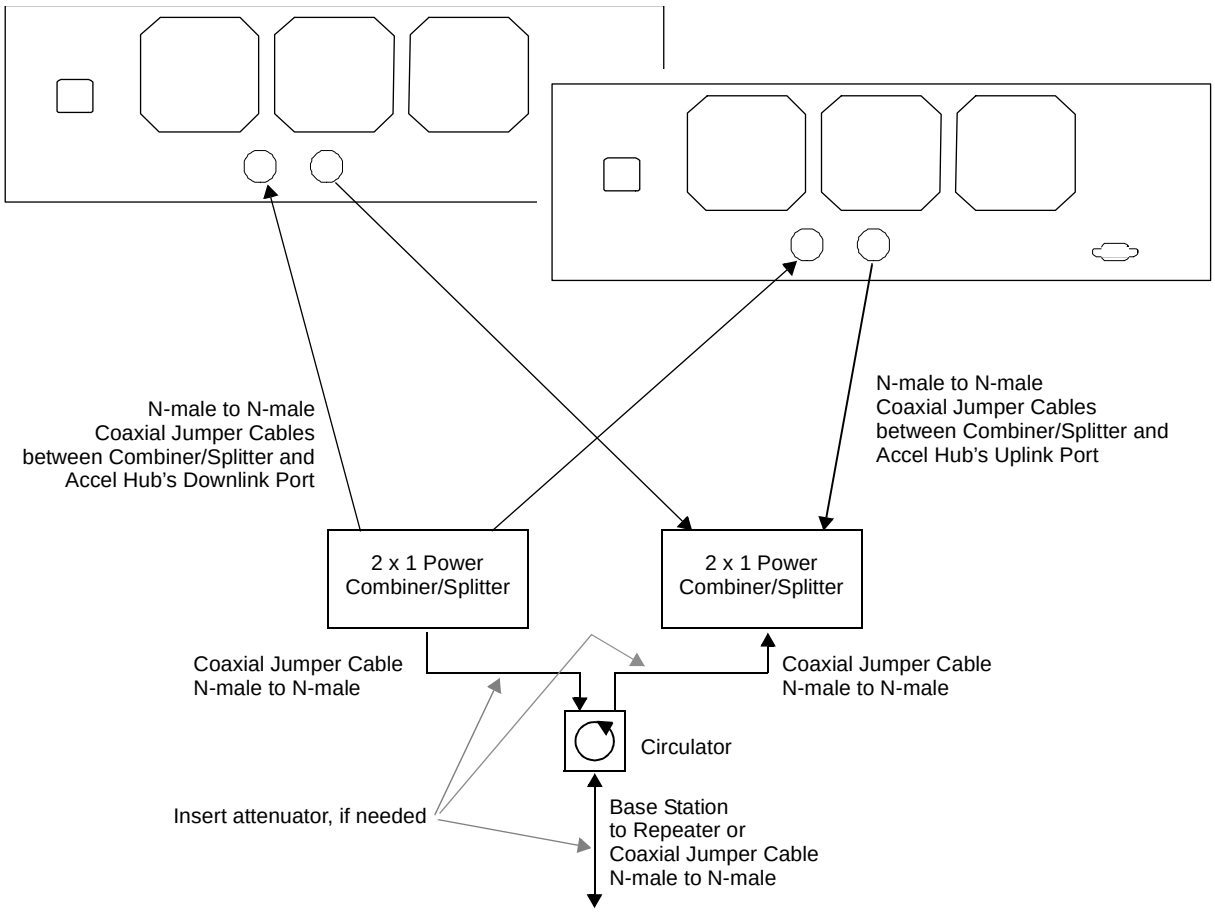

6.6 Connecting Contact Alarms to an Accel System

The Accel Hub can generate (source) two contact alarms as well as sense an external contact alarm.

- **Alarm Source (see Section 6.6.1 on page 6-30)**

  The Accel Hub has two alarm contacts, fault (major) and warning (minor). These contact are normally-closed (NC) and will open when an internal alarm is detected.

  - Fault is activated when any faults or disconnects are detected.
  - Warning is activated when any warning conditions are detected except lockout or when the end-to-end system test is not valid.

- **Alarm Sense (see Section 6.6.2 on page 6-33)**

  The Accel Hub can monitor an external alarm contact. The port can be configured for normally-open (NO) or normally-closed (NC) contacts. The interface expects a set of floating contacts, and an external voltage source is not required for this interface. AdminManager is used to monitor the port status.

The following table lists the alarm types, equipment that Accel is connected to, cable(s) used, and the errors (major and/or minor) that are detected.

Alarm Type	Unison connected to	Cable(s) Used	Errors Detected
Source	MetroReach	5-port Alarm Daisy-Chain Cable	Faults
Source	BTS	5-port Alarm Daisy-Chain Cable	Faults and Warnings
		In addition, a custom daisy-chain cable-to-BTS interface cable is required. Make this interface cable to the desired length and with the appropriate pin placement.	
Sense	LGCell	5-port Alarm Daisy-Chain Cable and the Alarm Sense Adapter Cable	Faults

Note that LGCell and MetroReach Focus support only faults (major errors).

Do not mix LGCell and Unison Accel Hubs in the same daisy-chain. You can daisy-chain multiple LGCell Main Hubs together and use the Alarm Sense Adapter Cable to connect the chain to a Unison Accel Hub, which will act as an alarm sensor.

6.6.1 Alarm Source

Unison always acts an alarm source, no matter what type of equipment you are connecting to. Refer to Section 6.6.2 on page 6-33 if you want Unison Accel to sense LGCell contact closures or other external alarms.

Using MetroReach Focus to Monitor Unison Accel

When you connect MetroReach Focus to Unison Accel, the Unison Accel Hub is the output of the alarms (alarm source) and Focus is the input (alarm sense), as shown in the following figure. Focus supports only faults (major errors).

Figure 6-7 Connecting MetroReach to Unison Accel

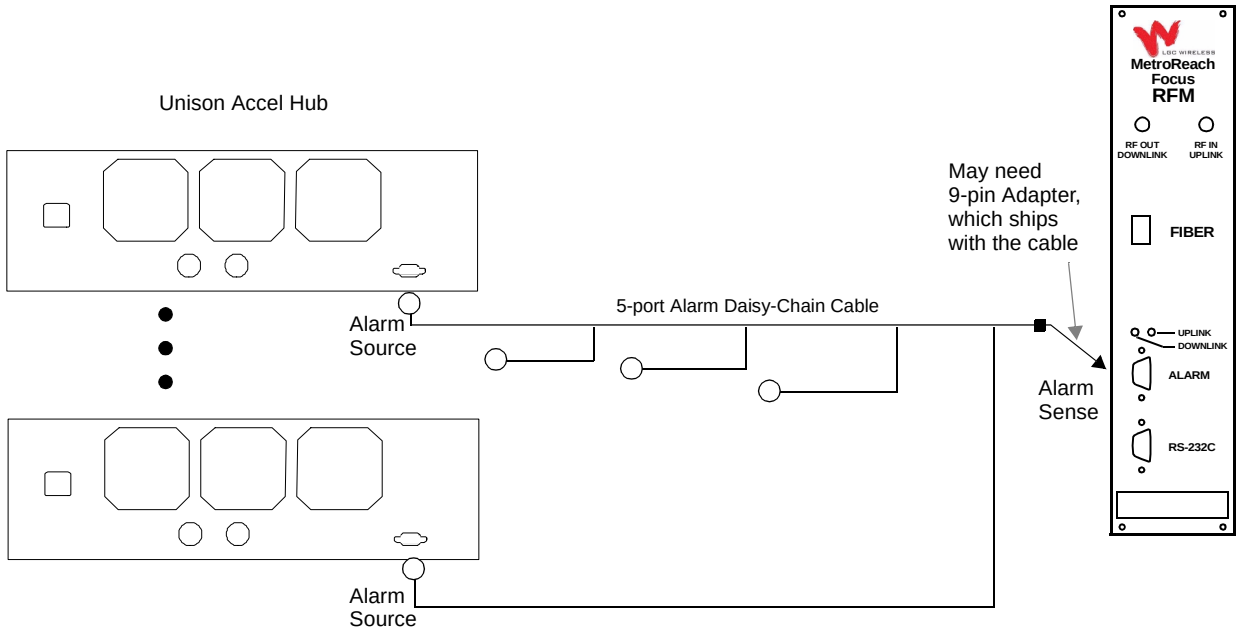

Using a Base Station to Monitor Unison Accel

When you connect a BTS to Unison Accel, the Unison Accel Hub is the output of the alarms (alarm source) and the BTS is the input (alarm sense), as shown in the following figure. An interface cable is required between the daisy-chain cable and the BTS. Because BTS alarm interface pinouts and Accel-to-BTS distances vary, this cable often is custom and wired on-site.

Figure 6-8 Using a BTS to Monitor Unison Accel

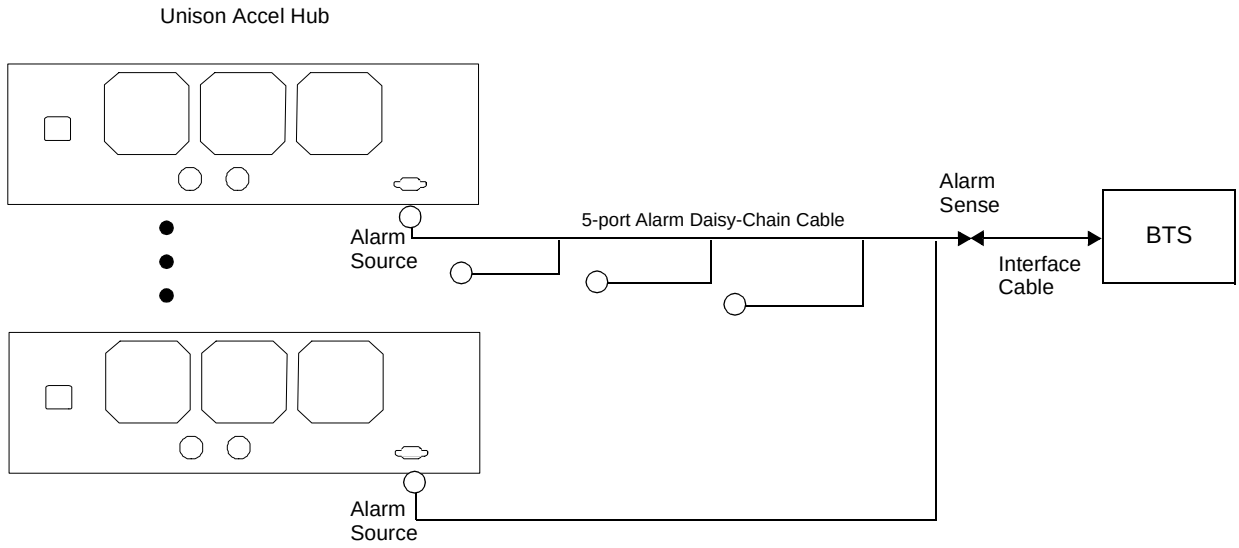

Using a Base Station and AdminManager to Monitor Unison Accel

In order to take full advantage of Unison Accel's OA&M capabilities you can use LGC Wireless' AdminManager software in addition to a BTS to monitor the system, as shown in Figure 6-9.

Figure 6-9 Using a BTS and AdminManager to Monitor Unison Accel

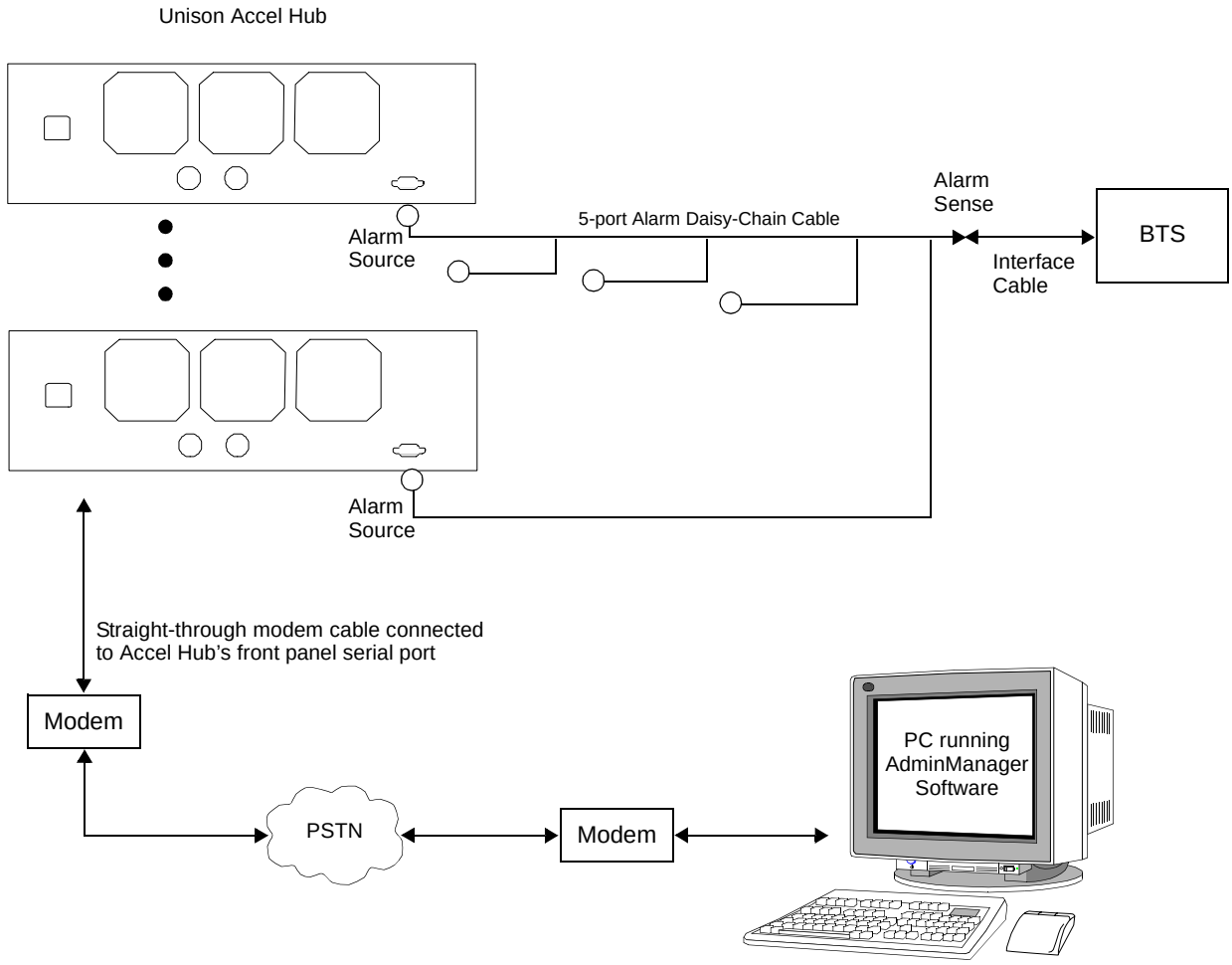

6.6.2 Alarm Sense

Use AdminManager to enable the Unison Accel system for “alarm sense” when connecting to the contact closure of LGCell Main Hubs or other external alarms (see Set Contact Sense Properties in the *AdminManager User Manual*).

Using Unison Accel to Monitor LGCells

When you connect LGCell to Unison Accel, the Unison Accel Hub is the input of the alarms (alarm sense) and the LGCell is the output (alarm source), as shown in the following figure.

Figure 6-10 Connecting LGCell to Unison Accel

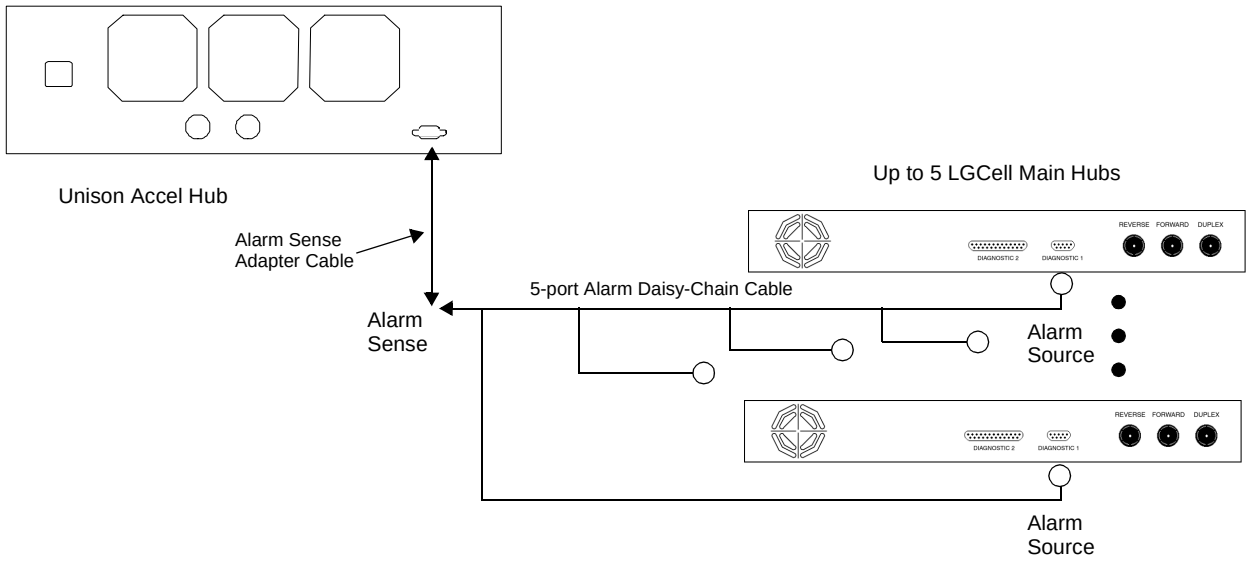

LGCell supports only faults (major errors). You must use the Alarm Sense Adapter Cable (see page 6-35) to interface the daisy-chain cable to Unison Accel. The adapter cable is required because it translates the LGCell fault pinout to the sense input pins on the Unison Accel Hub.

6.6.3 Alarm Cables

5-port Alarm Daisy-Chain Cable

Figure 6-11 shows the 5-port Alarm Daisy-Chain Cable (PN 4024-3), which supports fault and warning conditions (i.e., major and minor errors).

Figure 6-11 5-port Alarm Daisy-Chain Cable

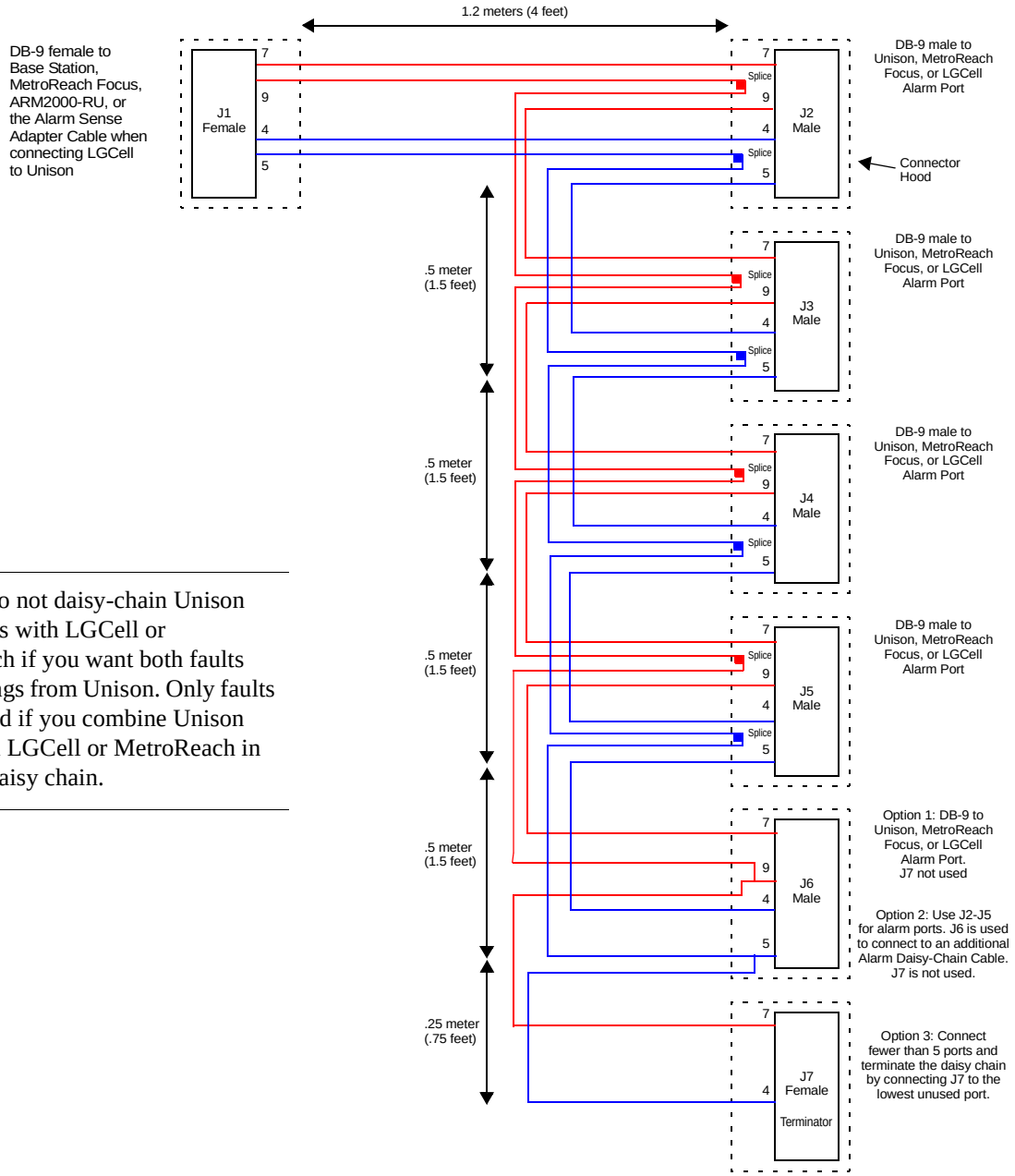

NOTE: Do not daisy-chain Unison Accel Hubs with LGCell or MetroReach if you want both faults and warnings from Unison. Only faults are reported if you combine Unison Accel with LGCell or MetroReach in the same daisy chain.

Alarm Sense Adapter Cable

The alarm sense adapter cable (PN 4025-1) translates the LGCell fault pinout to the sense input pins on the Unison Accel Hub. You must use this adapter cable, as illustrated in Figure 6-12, with the 5-port Alarm Daisy-Chain Cable when connecting LGCell to Unison.

Figure 6-12 Alarm Sense Adapter Cable

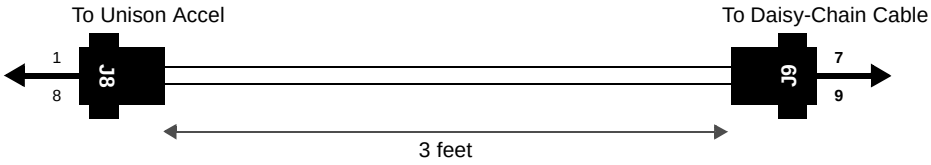

6.7 Alarm Monitoring Connectivity Options

The following connectivity options are described here:

- Section 6.7.1 Direct Connection 6-36
- Section 6.7.2 Modem Connection 6-37
- Section 6.7.3 232 Port Expander Connection 6-38
- Section 6.7.4 POTS Line Sharing Switch Connection 6-39
- Section 6.7.5 Ethernet and ENET/232 Serial Hub Connection 6-40

Note that the only accessory that is available through LGC Wireless is the DB-9 to DB-9 null modem cable, which is provided with AdminManager.

6.7.1 Direct Connection

In this configuration, the AdminManager PC connects directly to the **RS-232** serial port on the Accel Hub's front panel using a null modem cable.

Figure 6-13 OA&M Direct Connection

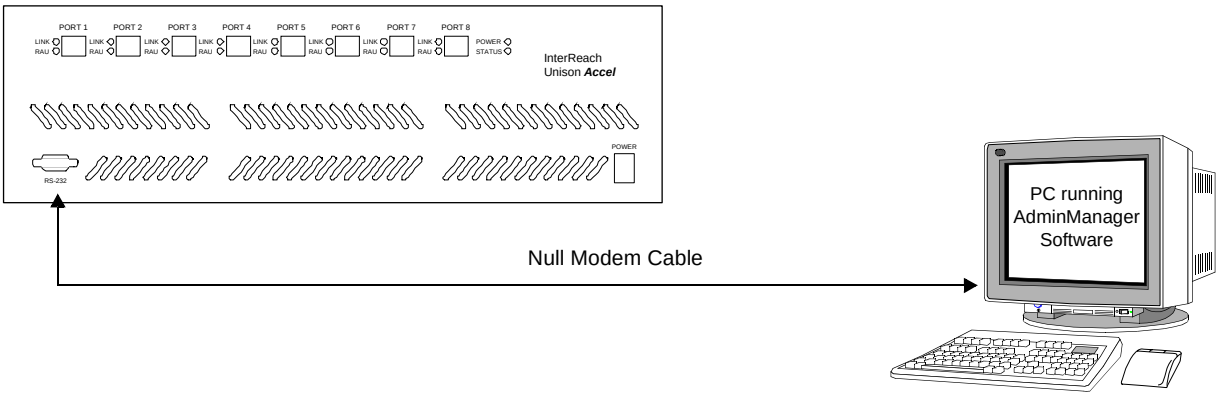

NOTE: The null modem cable must support full hardware handshaking. See Appendix A.4 on page A-4 for cable wiring information.

6.7.2 Modem Connection

In this configuration, the PC and the Accel Hub connect to modems and communicate via a standard dial-up telephone connection.

Figure 6-14 OA&M Modem Connection

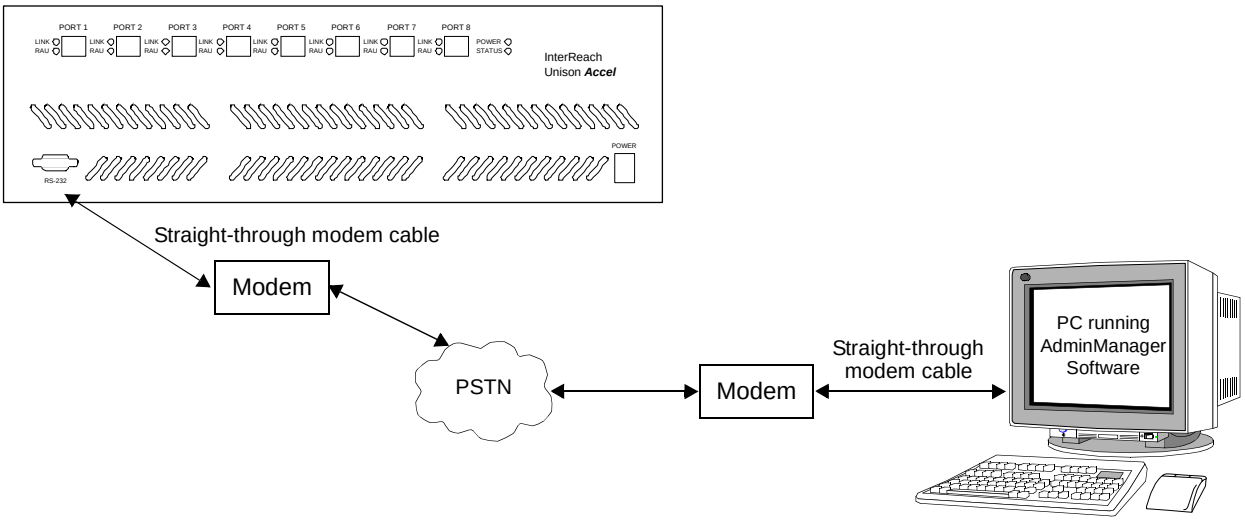

NOTE: See Appendix A.3 on page A-3 for the modem cable wiring information.

6.7.3 232 Port Expander Connection

In this configuration a port expander is used to allow the connection of multiple devices to a single PC serial port. Testing was performed with an Equinox SST-16P Multiport Board. A DB-25 male to DB-9 female modem cable must be made to connect the connector panel to the Accel Hub (refer to Appendix A.5 on page A-5). Or, you can use a DB-25 male/DB-9 male adapter with a DB-9 female to DB-9 female null modem cable.

Figure 6-15 OA&M Connection using a 232 Port Expander

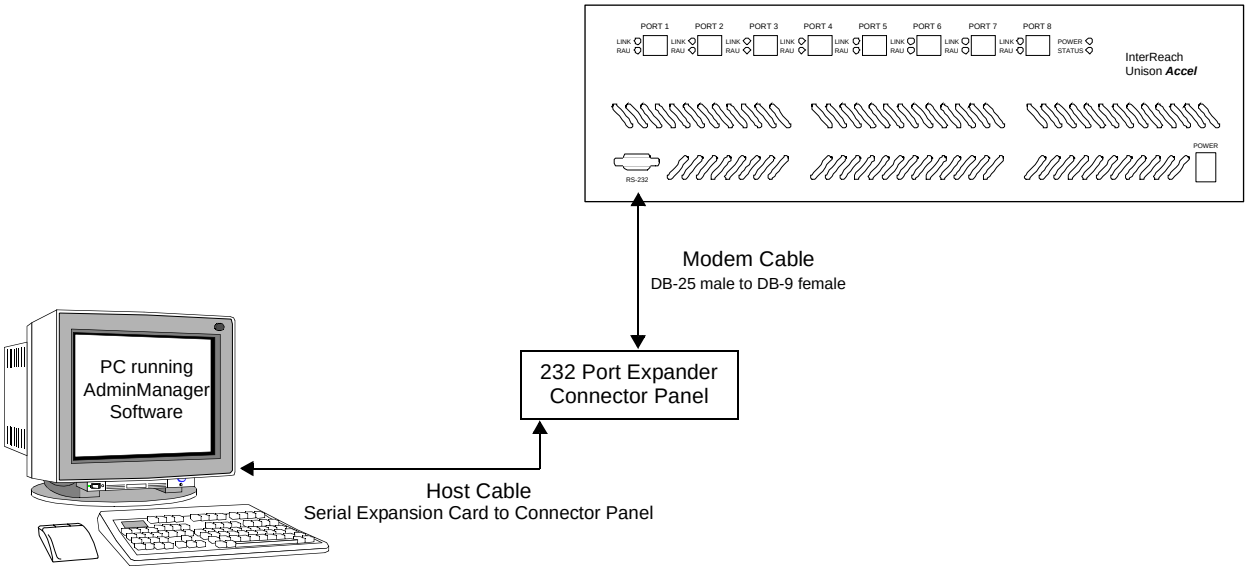

NOTE: See Appendix A.5 on page A-5 for the modem cable wiring information.

6.7.4 POTS Line Sharing Switch Connection

Using a line sharing switch you can connect up to four modems to a single telephone line. Testing was performed with a Teltone Line Sharing Switch, model number M-394-B-01.

Figure 6-16 OA&M Connection using a POTS Line Sharing Switch

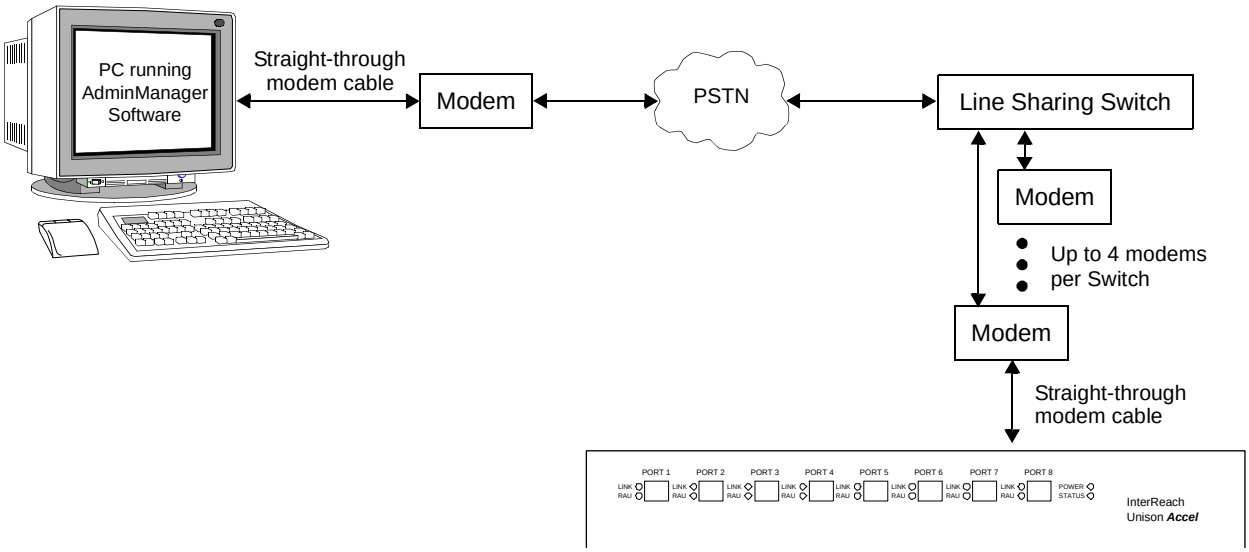

Up to 16 modems can be monitored using a single telephone line by cascading line sharing switches, as shown in Figure 6-17.

Figure 6-17 Cascading Line Sharing Switches

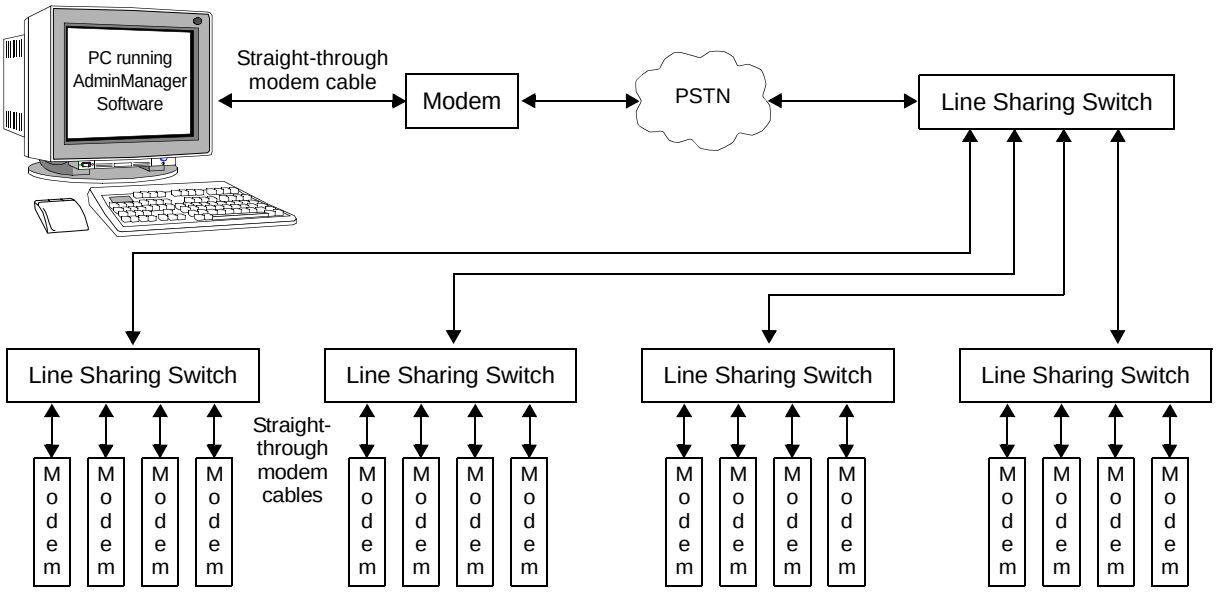

6.7.5 Ethernet and ENET/232 Serial Hub Connection

An Ethernet-to-RS-232 serial hub or converter box can be used to communicate between the PC and Unison Accel. Testing was performed with an Equinox SST Ethernet Serial Provider.

Figure 6-18 OA&M Connection using Ethernet and ENET/232 Serial Hub

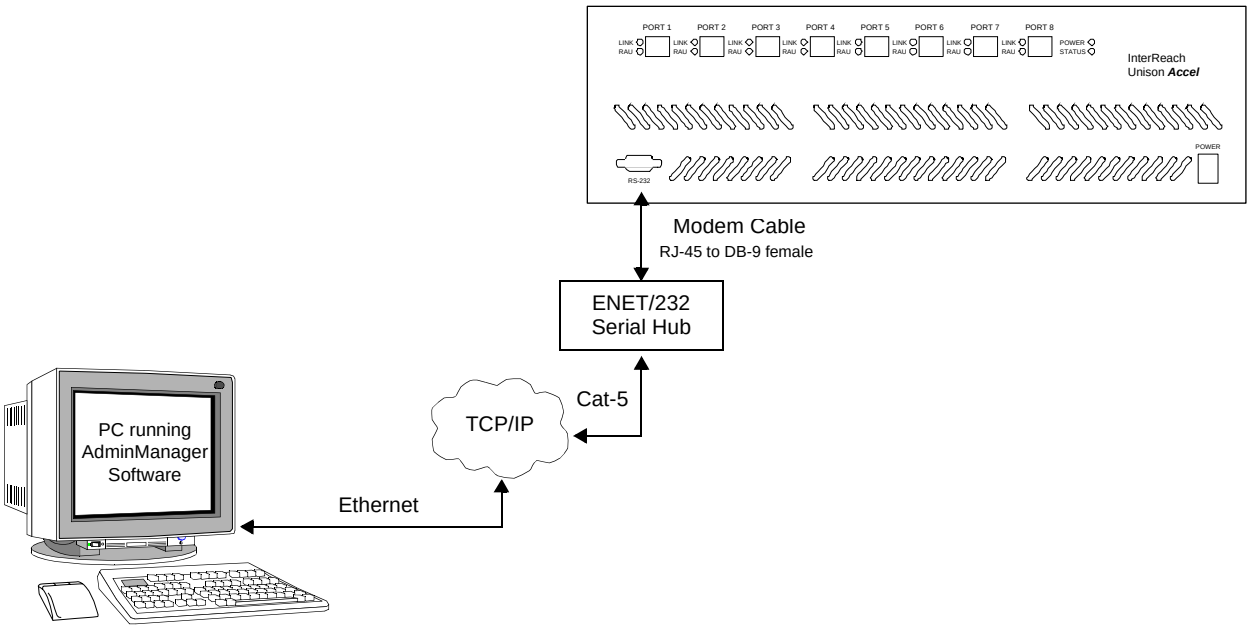

SECTION 7

Replacing Unison Accel Components in an Operational System

7.1 Replacing an RAU

Be aware that the new RAU must be the same band as the one you are replacing. If you replace an RAU with one that is of the wrong band, it will not work.

The Accel Hub automatically checks the band of a replaced RAU. There is no need to issue commands directly from the Hub. Therefore, as long as the RAU is of the correct band, the system will operate properly.

Replacing an RAU

1. Use AdminManager or refer to the As-Built Document to review the current RAU's configuration. To use AdminManager:
   a. Select Get Unit Info command from the Configuration and Maintenance Panel.

      The Options dialog box is displayed (see Get Unit Info in the *AdminManager User Manual*, PN 8810-10).
   b. Select Remote Access Unit radio button.
   c. Enter the hierarchy of the RAU in the text box.

      For example, for RAU number 4 that is connected to Expansion Hub number 1, enter 1-4.
   d. Click OK.

      Information for the RAU is displayed in the Configuration and Maintenance Panel window.
5. Disconnect the Cat-5/6 cable and antenna from the unit to be replaced.
6. Install the new RAU.
7. Connect the antenna and then the Cat-5/6 cable to the new RAU.
8. Repeat Step 1 to verify that the new RAU is of the same frequency band as the one replaced.

AdminManager Tasks

- Use the Advanced RAU Settings option on the Configuration & Maintenance panel to set the RAU's 10 dB attenuation and UL ALC settings.
- When convenient, perform System Test to optimize performance.

  During System Test, the entire system is temporarily off-line and no RF is being transmitted.

Checking the RAU's LEDs

1. The RAU's **LINK** and **ALARM** LEDs should blink (green/red) on power up.
   - If the LEDs do not blink on power up, replace the RAU.
2. After several seconds both LEDs should change to green, which indicates that the unit has been successfully replaced, there is communication with the Hub, and the RAU band is correct.
   a. If the **LINK** LED remains green and the **ALARM** LED remains red, verify that the RAU model is correct for the intended frequency band.
      – Disconnect the cable and then reconnect it once; doing this more than once will not change the result.
   b. If both LEDs still don't change to green, use the AdminManager to determine the exact nature of the fault and see a recommendation of how to correct it.
   c. If both LEDs turn red (after 45 seconds), the Hub has terminated communications.

7.2 Replacing an Accel Hub

You must record the system configuration settings from the old Accel Hub's memory before replacing the unit (see Get System Configuration Settings below). You will program the new Hub with this information. If the Hub is programmed incorrectly, the system will not work. If the Hub is not functioning, get the configuration settings from the As-Built Document that was created as part of the original installation.

Get System Configuration Settings

1. Connect the null modem cable to the PC/laptop and the Accel Hub.
2. Start the AdminManager software.
3. Select the Configuration & Maintenance Panel option from the AdminManager main window.
4. Click the SAVE CONFIG button.

   The Save Configuration Notes dialog box is displayed.
5. Type any notes you want to save with the configuration settings into the dialog box and click OK.

   The configuration settings are saved in a text file, for example:

```
Begin Notes ******************************************
LGC HQ
05/23/01 MH configuration L010MH11
System configuration
End Notes ********************************************

Frequency Band is DCS Low.
System Gain: UL = 12 dB, DL = 4 dB.
Callback Number is 1234567.
System label is LGC.

Main Hub Information:
Serial Number: L010BMH1
Part Number: 7405101
Revision Number: 03
Firmware Revision: 010526

Expansion Hub LGC-1 Information:
Serial Number: L010BEH9
Part Number: 7405101
Revision Number: 03
Firmware Revision: 010513

RAU LGC-1-5 Information:
Serial Number: L010BRU1
Part Number: 7405101
Revision Number: 03

Firmware Revision: 010021
```

Changes for Accel

Replacing an Accel Hub

1. Turn off the power to the Accel Hub.
2. Disconnect all cables and the AC power cord.
3. Replace the Hub with a new one.
4. Connect the AC power cord and all cables – remembering to clean and correctly connect the uplink and downlink cables.
5. Connect the null modem cable to the PC and then to the Hub's front panel DB-9 serial connector.
6. Start the AdminManager software.
7. Select the Installation Wizard option from the AdminManager main window.
8. Turn on the power to the Hub.
9. Observe the LEDs after turning on the power.

   If there is no band programmed in the Hub, the LEDs will blink continuously and there is no communication with connected Expansion Hubs or their RAUs.

   If there is a band programmed, the LEDs blink for a 5-second test. The programmed band is then issued to all Expansion Hubs and their RAUs, and a system test is performed. It can take up to 1.5 minutes to complete the test. During System Test, the entire system is temporarily off-line and no RF is being transmitted.

AdminManager Tasks

- Use the Installation Wizard to:
  - Set the Operation Band
- Use the Configuration & Maintenance panel to:
  - Set Callback Number
  - Set Contact Sense Properties
  - Set System Parameters
  - Perform System Test

    During System Test, the entire system is temporarily off-line and no RF is being transmitted.

    Always perform the system test if the band was changed.

Checking the Accel Hub's LEDs

- The LEDs should blink through a 5-second test on power up.
  - If the LEDs do not blink on power up, replace the Hub.
  - If the LEDs do not illuminate at all, make sure the AC power cable is connected.
  - If the LEDs blink continuously, there is no band programmed in the Hub and there is no communication with connected RAUs.

- For each Cat-5/6 port that has a connected RAU:
  - The **LINK** LED should be green.
  - The **RAU** LED should be green indicating the RAU is functioning

- Refer to Section 8.3, "Troubleshooting," on page 8-2 for more LED states.

NOTE: Use the AdminManager software's Configuration & Maintenance panel to isolate system problems.

SECTION 8

Maintenance, Troubleshooting, and Technical Assistance

There are no user-serviceable parts in any of the Unison components. Faulty or failed components are fully replaceable through LGC Wireless.

Address	2540 Junction Avenue San Jose, California 95134-1902 USA
Phone	1-408-952-2400
Fax	1-408-952-2410
Help Hot Line	1-800-530-9960 (U.S. only) +1-408-952-2400 (International)
Web Address	http://www.lgcwireless.com
e-mail	service@lgcwireless.com

8.1 Service

There are no user-serviceable parts in the Unison Accel system. All units should be replaced and returned to the factory for service if needed.

8.2 Maintenance

No periodic maintenance of the Unison Accel equipment is required.

8.3 Troubleshooting

NOTE: Unison has no user-serviceable parts. Faulty or failed units are fully replaceable through LGC Wireless.

Sources of potential problems include:

- Faulty cabling/connector
- Malfunction of one or more Unison Accel components
- Antenna, base station, or repeater problem
- External RF interface
- Tripped circuit breaker
- Using a Null modem cable that does not support full hardware handshaking when using AdminManager

NOTE: Faulty cabling is the cause of a vast majority of problems. All Cat-5/6 cable should be tested to TIA/EIA 568-A specifications.

You must use AdminManager for troubleshooting the system, only use the LEDs as backup or for confirmation. However, if there are communication problems within the system, the LEDs may provide additional information that is not available using AdminManager. The only problem that is indicated solely by the LEDs is when a band is not programed in the Accel Hub. In that case, the LEDs flash continuously, beyond the normal system check flashing upon power up.

If you cannot determine the cause of a problem after following the recommended procedures, call LGC Wireless customer help hot line:

1-800-530-9960 (U.S. only)
+1-408-952-2400 (International)

8.3.1 Troubleshooting using AdminManager

To begin troubleshooting, use AdminManager software to determine the current faults and warnings for all of the units in the system. To troubleshoot, start with the Accel Hub's faults and warnings, then proceed to each of the RAUs.

8.3.1.1 Fault Indications

Once all of the units are powered on and the cable connections are made, the faults from each unit can be requested using AdminManager. Start with the Accel Hub and work downstream.

Resolve all faults first and then check the warnings. Take appropriate action to resolve the faults, as indicated in the following tables. In cases where there is more than one possible cause, they are listed from the "most likely" to the "least likely" cause. Actions are listed in the order that they should be performed; not all actions may need to be done.

NOTE: If you have a red **STATUS** LED without a fault message, it probably indicates that the unit is locked out.

Faults Reported by the Accel Hub

Table 8-1 Faults Reported by the Accel Hub

Fault Message & Icon	LED	State	Possible Causes	Action	Impact
Accel Hub Faults					
Hardware failure	**STATUS**	Red	Internal hardware failure.	Replace the Hub.	System off-line.
Frequency band not programmed	All LEDs (except **POWER**)	Continuous blinking	Factory default.	Program the frequency band using AdminManager's Installation Wizard.	System off-line.
Failed to perform system test	**STATUS**	Red	Internal failure.	Replace the Hub when possible.	Degraded performance.

Table 8-1 Faults Reported by the Accel Hub (continued)

Fault Message & Icon	LED	State	Possible Causes	Action	Impact
Accel is over temperature	**STATUS**	Red	Fan failure	Use AdminManager to check Hub status. Check the Hub fan for rotation, air flow blockage, dust. If fan is not operating, replace the Hub.	Hub and connected RAUs off-line.
RAU*n* uplink AGC failure	**LINK**	Green	Cat-5/6 cable length.	Check Cat-5/6 cable length.	Degraded performance.
	RAU	Green	Cat-5/6 cable failure.	Check Cat-5/6 cable for shorts or opens.	
	STATUS	Red	Hub uplink port failure or RAU failure.	Move RAU to another port. If fault persists, replace the RAU. If no fault, flag previous port as unusable and replace the Hub when possible.	
			Hub internal failure.	If more than one RAU connected to the same Hub reports this failure, replace the Hub.	
RAU*n* downlink port failure	**STATUS**	Red	Hub internal failure.	Move the RAU to another port. If fault persists, replace the Hub. If no fault, flag previous port as unusable and replace the Hub when possible.	Degraded performance.
RAU Faults					
RAU*n* disconnected and	**LINK**	Red	RAU was connected and is now disconnected.	If RAUn is disconnected, reconnect it or use AdminManager's "Clear All Disconnect Status" command to clear the disconnect fault.	RAU*n* is off-line.
	RAU	Off	Cat-5/6 cable failure.	Check Cat-5/6 cable for shorts or opens.	
			RAU internal failure or Accel Hub port bad.	Move the RAU to another port. If fault persists, replace the RAU. If no fault, flag previous port as unusable and replace the Hub when possible.	
No communication with RAU*n* and	**LINK**	Red	Cat-5/6 cable failure.	Verify that the Cat-5/6 cable has no shorts or opens.	Degraded performance or RAU*n* is off-line.
	RAU	Off	RAU internal failure. *or* Accel Hub port failure.	Move the RAU cables to another port. If fault persists, replace the RAU; otherwise, the Hub port is bad, mark the port as unusable and replace the Hub when possible.	

Table 8-1 Faults Reported by the Accel Hub (continued)

Fault Message & Icon	LED	State	Possible Causes	Action	Impact
RAU*n* over current and	**LINK**	Green	Cat-5/6 cable failure.	Verify Cat-5/6 cable has no shorts or opens.	RAU*n* is off-line.
	RAU	Red	RAU internal failure.	Move RAU to another port. If fault persists, replace the RAU. If no fault reported, remove the RAU, power cycle the Hub, connect known good RAU to port. If fault reported, replace the Hub.	

Remote Access Unit Faults

Table 8-2 Remote Access Unit Faults

Fault Message	LED	State	Possible Causes	Action	Impact
Hardware failure	**ALARM**	Red	Internal hardware failure.	Replace the RAU.	RAU is off-line.
Frequency band not programmed	**ALARM**	Red	Wrong version of RAU for frequency band desired.	Replace the RAU if not valid for desired frequency band.	RAU is off-line.
RAU is over temperature	**ALARM**	Red	Ambient temperature above maximum.	Check environmental controls; move the RAU to cooler environment.	RAU is off-line.
Power supplied by Accel Hub is too low	**ALARM**	Red	Cat-5/6 cable failure.	Verify Cat-5/6 cable has no shorts or opens.	RAU is off-line.
			RAU internal failure. *or* Accel Hub port failure.	Move the RAU cable to another Hub port. If fault persists, replace the RAU; otherwise, the Hub port is bad, mark the port as unusable and replace the Hub when possible.	
			Accel Hub internal failure.	If more than one RAU connected to the same Hub reports this failure, replace the Hub.	
Downlink pilot failure	**ALARM**	Red	Cat-5/6 cable failure.	Verify that the Cat-5/6 cable has no shorts or opens. Verify maximum Cat-5/6 cable length of 150 meters. Verify minimum Cat-5/6 cable length of 10 meters.	Degraded performance or RAU is off-line.
			RAU internal failure. *or* Accel Hub port failure.	Move the RAU cable to another Hub port. If fault persists, replace the RAU; otherwise, the Hub port is bad, mark the port as unusable and replace the Hub when possible.	
			Accel Hub internal failure.	If more than one RAU connected to the same Hub reports this failure, replace the Hub.	

8.3.1.2 Warning Indications

Warnings alert you to conditions that indicate potential system failure. Warnings are displayed in the Messages pane in red lettering.

Before addressing warnings, ensure that all faults are resolved. Take appropriate action to resolve the warnings, as indicated in the following tables.

Accel Hub Warnings

Table 8-3 Accel Hub Warnings

Warning Message	Action	Impact
Temperature is high	Check room environmental controls.	Potential Hub failure.
Input signal above limiter	Reduce input signal strength.	Can only occur for DCS, GSM, or UMTS configurations

Remote Access Unit Warnings

Table 8-4 Remote Access Unit Warnings

Warning Message	Action	Impact
Temperature is high	Move the RAU to cooler environment.	Potential RAU failure.
Power amplifier is failing	Replace the RAU when possible.	Potential RAU failure.

8.3.1.3 Status Messages

Status messages alert you to conditions that may impact system performance. Status messages are displayed in the Messages pane in blue lettering.

NOTE: The icons displayed in the system status tree assume that there are no other faults, warnings, or status present.

Accel Hub Status Messages

Table 8-5 Accel Hub Status Messages

Message	Icon	Action	Impact
Commanded out of service		Command unit into service using AdminManager.	System is off-line.
Unable to perform system test on power up		Check Hubs and RAUs for faults and warnings.	Degraded system performance.
RAU reports a warning status		Check RAUs for warnings.	Degraded system performance.
Unable to perform system end-to-end test		Replace Hub when possible.	Degraded system performance.
Fan*n* failure		Check the Hub fans for rotation, air flow blockage, dust Use AdminManager to check Hub status. If fans are not operating, replace the Hub.	Temperature may rise to fault level resulting in the Hub and connected RAUs being off-line.
Cat-5/6 cable is longer than recommended maximum		Check that the Cat-5/6 cable does not exceed the recommended maximum length.	Degraded system performance.
Commanded Fault Lockout		Use AdminManager to check Hub faults and replace Hub as required. Perform system test.	Connected RAUs are off-line.

Remote Access Unit Status Messages

Table 8-6 Remote Access Unit Status Messages

Message	Icon	Action	Impact
DC voltage is low		Check the Cat-5/6 cable for shorts and opens. Replace the RAU when possible.	Unreliable operation.
Cat-5/6 cable is longer than recommended maximum		Check that the Cat-5/6 cable does not exceed the recommended maximum length.	Degraded system performance.
Unit not system tested		Use AdminManager to command System Test. Note that the system will be off-line for 30 seconds during test.	System not operating at optimum performance.
Antenna disconnected		Check that the antenna is connected to the RAU; check coax cable between RAU and antenna.	Antenna may be disconnected. If it is connected, then the antenna/cable measure higher return loss than optimum configuration.
RAU Commanded Out-of-Service		Command unit into service using AdminManager.	RAU is off-line.
Commanded Fault Lockout		Use AdminManager to check Hub faults and and replace Hub as required.	RAU is off-line.
Power supplied by Accel Hub is too high		Check the Cat-5/6 cable for opens and shorts. Move RAU cable to another Hub port. Replace RAU when possible.	Unreliable operation.
System test uplink failure		Unable to complete system test.	Degraded system performance.
Can’t calibrate downlink		Unable to complete system test.	Degraded system performance.

8.3.2 Troubleshooting using LEDs

The following troubleshooting guide is from the perspective that all Unison Accel equipment is installed, their cables are connected, and they are powered on; it is assumed that the system was operating normally before the problem to be diagnosed occurred. (Refer to Section 6 for information on troubleshooting during initial installation of the system.)

Always use AdminManager, if possible, to troubleshoot the system. The Hub LEDs are for backup troubleshooting. The RAU LEDs probably will not provide additional information for troubleshooting.

8.3.2.1 Troubleshooting Accel Hub LEDs During Normal Operation

- All of the Accel Hub's **LINK** and **RAU** LEDs that have RAUs connected should be Green/Green, indicating that the RAU is powered on, communication is established, and operation is normal.
- The **POWER** and **STATUS** LEDs should all be Green.

Table 8-7 Troubleshooting Accel Hub Port LEDs During Normal Operation

During Normal Operation	Accel Hub Port LEDs	State	Action	Impact
RAU is not connected	**LINK**	Red	If the RAU was disconnected accidentally, re-connect the Cat-5/6 cable. The Hub's port LEDs should change to Green/Red (then Green/Green, after 20 seconds, if the Hub is connected and has band programmed). Use AdminManager to calibrate system when possible to achieve the best performance. Use AdminManager's "Clear All Disconnect Status" command if you are permanently removing the RAU from service. The Hub's port LEDs should change to Off/Off.	RAU was previously connected, but it is not currently connected; RAU cable is disconnected.
	RAU	Off		
RAU is connected	**LINK**	Red	Disconnect/reconnect the Cat-5/6 cable to force power-on reset to the RAU. If the port LEDs remain Red/Off, check for the exact cause of Hub faults using AdminManager.	Lost communications with the RAU. The RAU could have powered down due to over current; cable could have been damaged.
	RAU	Off		
	LINK	Green	RAU reports a fault condition; check for the exact cause of Hub and RAU faults using AdminManager.	Depends on the fault condition.
	RAU	Red		

Table 8-8 Troubleshooting Accel Hub Status LEDs During Normal Operation

During Normal Operation	Accel Hub Status LEDs	State	Action	Impact
At Any Time	**STATUS**	Red	Use AdminManager to determine the exact cause of the fault. Power cycle one time. If fault remains, replace the Hub.	Internal Hub fault.
			Use AdminManager to check if the Hub is commanded Out-of-Service (every Hub **PORT** LED will be red as well). A power cycle will not clear a commanded Out-of-Serivce, you must use AdminManager to clear this state.	Main Hub and all downstream units are off-line.
	STATUS	Alternating Red/Green	Reduce input signal power; reduce system gain.	Signal compression.

8.4 Troublshooting Cat-5/6

Refer to Table A-1 on page A-1 for a description of the Cat-5/6 wire assignments. The following table summarizes Cat-5/6 problems if a wire is cut or miswired.

Table 8-9 Summary of Cat-5/6 Cable Wiring Problems

Type of problem	Message	Icon	Impact
Wire 1 or 2 cut	None		High phase noise, degraded signal on both Downlink and Uplink (high bit error rate)
Wire 3 or 6 cut	• No communication with RAU*n*		RAU unable to communicate with Hub, degraded performance or RAU off-line
Wire 4 or 5 cut	• RAU*n* uplink AGC failure		Increased ripple in the uplink path, decreased UL gain, or no UL gain
	• Cat-5/6 cable between RAU*n* and Hub is longer than recommended		
Wire 7 or 8 cut	• Downlink pilot failure		Increased ripple in the downlink path, RAU off-line
	• Cat-5/6 cable between RAU*n* and Hub is longer than recommended		
Wire 1 to RJ-45 pin 3 or 6	• No communication with RAU*n*		RAU unable to communicate with Hub, RAU's RS-485 port damaged, degraded performance or RAU off-line
Wire 1 to RJ-45 pin 4, 5, 7 or 8	• RAU*n* over current		RAU will not power on.
Wire 2 to RJ-45 pin 3 or 6	• No communication with RAU*n*		RAU unable to communicate with Hub, RAU's RS-485 port damaged, degraded performance or RAU off-line
Wire 2 to RJ-45 pin 4, 5, 7 or 8	• RAU*n* over current		RAU will not power on
Wire 3 to RJ-45 pin 4, 5, 7 or 8	• No communication with RAU*n*		RAU unable to communicate with Hub, degraded performance or RAU off-line
Wire 6 to RJ-45 pin 4, 5, 7 or 8	• No communication with RAU*n*		RAU unable to communicate with Hub, degraded performance or RAU off-line
Wire 4 to RJ-45 pin 7 or 8	• RAU*n* uplink AGC failure		Increased ripple in the downlink and uplink path, degraded performance or RAU off-line
	• Downlink pilot failure		
	• Cat-5/6 cable between RAU*n* and Hub is longer than recommended		

Table 8-9 Summary of Cat-5/6 Cable Wiring Problems (continued)

Type of problem	Message	Icon	Impact
Wire 5 to RJ-45 pin 7 or 8	• RAU*n* uplink AGC failure		Increased ripple in the downlink and uplink path, degraded performance or RAU off-line
	• Cat-5/6 cable between RAU*n* and Hub is longer than recommended		
	• Downlink pilot failure		
	• Cat-5/6 cable between RAU*n* and Hub is longer than recommended		

8.5 Technical Assistance

Call our help hot line for technical assistance:

1-800-530-9960 (U.S. only)
+1-408-952-2400 (International)

Leave your name and phone number and an LGC Wireless customer service representative will return your call within an hour. Be prepared to provide the following information when you receive the return call:

- Company name
- End user name
- Type of system, model number, frequency
- Approximate time in service (warranty), sales order number
- Description of problem
- LED status
- AdminManager faults, warnings, and status messages

APPENDIX A

Cables and Connectors

A.1 Cat-5/6 Cable (ScTP)

- Connects the Accel Hub to the RAU(s)
- Transmits (downlink) and receives (uplink) IF signals
- Delivers DC electrical power to the RAUs. The Accel Hub's DC voltage output is 36V DC nominal. A current limiting circuit is used to protect the Hub if it reaches its current limit
- Carries configuration and status information
- Use shielded RJ-45 connectors
- Distances:
  - Minimum: 10 meters (33 ft)
  - Recommended Maximum: 100 meters (328 ft)
  - Absolute Maximum: 150 meters (492 ft)

There are four separate twisted pairs in one Cat-5/6 screened twisted pair (ScTP) cable. The ScTP cable loss described in this document is for Cat-5 Mohawk/CDT 55986 or Belden 1624P DataTwist Five cable, or equivalent. The following table lists the functional assignment of the pairs:

Table A-1 Cat-5/6 Twisted Pair Assignment

Pair (wire number)	Function
1 & 2	Clock and Input Voltage
3 & 6	RS-485
4 & 5	Uplink IF, UL Pilot and Ground
7 & 8	Downlink IF, DL Pilot and Ground

All Cat-5/6 cable must be terminated according to the TIA/EIA 568-A standard. The following diagram shows the top view of the wiring map for the cable and how the four pairs should be terminated.

Figure A-1 Wiring Map for Cat-5/6 Cable

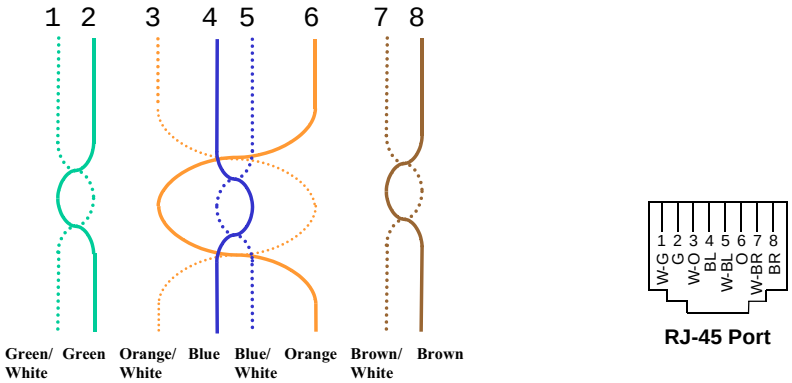

The nominal DC impedance of the Cat-5/6 cable is 0.08 ohm/meter and the nominal RF impedance is 100 ohm.

NOTE: Be sure to test cable termination before installing the cable.

NOTE: Mohawk/CDT 55986 or Belden 1624P DataTwist® Five ScTP cable, or equivalent is required. In order to meet FCC and CE Mark emissions requirements, the Cat-5/6 cable must be screened (ScTP) and it must be grounded to the units at both ends using shielded RJ-45 connectors.

A.2 Coaxial Cable

- Connects an Accel Hub to a repeater or base station (N-type connectors)
- Connects an RAU to a passive antenna (SMA connectors)

A.3 Standard Modem Cable

- Connects a modem to the Accel Hub's front panel serial port

Figure A-2 Standard Modem Cable Pinout

DB-9 Connector Pin		DB-25 Connector Pin
1	↔	8
2	↔	3
3	↔	2
4	↔	20
5	↔	7
6	↔	6
7	↔	4
8	↔	5
9	↔	22

A.4 DB-9 to DB-9 Null Modem Cable

A DB-9 female to DB-9 female null modem cable is used to connect the AdminManager PC to an Accel Hub. A cable is included with AdminManager. Table A-2 lists the cable pinout and Figure A-3 shows a diagram of its wiring.

Table A-2 DB-9 Female to DB-9 Female Null Modem Cable Pinout

From	Signal	To	Signal
P1-4	DTR	P2-6, P2-1	DSR, DCD
P1-6	DSR	P1-1, P2-4	DCD, DTR
P1-3	TXD	P2-2	RXD
P1-2	RXD	P2-3	TXD
P1-5	GND	P2-5	GND
P1-7	RTS	P2-8	CTS
P1-8	CTS	P2-7	RTS
P1-9	N/C	N/C	N/C

Figure A-3 DB-9 Female to DB-9 Female Null Modem Cable Diagram

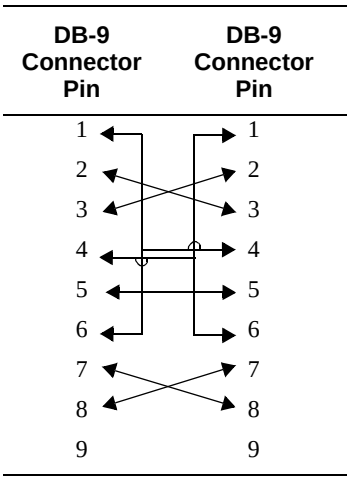

Note that for each DB-9 connector, pins 1 and 6 are tied together and sent to pin 4 of the opposite connector; thus, providing the required handshake signals.

A.5 DB-25 to DB-9 Null Modem Cable

A DB-25 male to DB-9 female Null modem cable is used to connect a 232 Port Expander to an Accel Hub. Table A-3 lists the pinout of the cable and Figure A-4 shows a diagram of its wiring.

Table A-3 DB-25 Male to DB-9 Female Null Modem Cable Pinout

25-Pin	Signal	9-Pin	Signal
20	DTR	1, 6	DSR, DCD
2	TX	2	RX
3	RX	3	TX
6,8	DSR, DCD	4	DTR
7	GND	5	GND
5	CTS	7	RTS
4	RTS	8	CTS

Figure A-4 DB-25 Male to DB-9 Female Null Modem Modem Cable Diagram

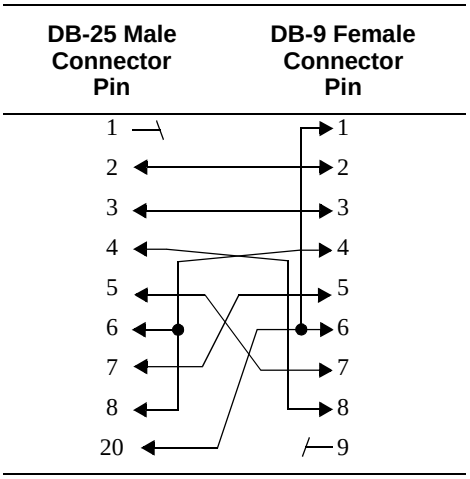

APPENDIX B

InterReach Unison Accel Property Sheet

Use the InterReach Unison Accel Property Sheet, which is provided on the following page, to document a system configuration. The completed form can be used for future reference when the system is being maintained or components are added or exchanged. An example of a completed form is shown below.

LGC WIRELESS

InterReach Unison Accel Property Sheet

Installer:	Date:	Accel Hub Serial Number:
J. Smith	10/10/02	L010BMH1

System Label:	System Gain: UL:	System Gain: DL:	Alarm Sense:		System Band:
AB			☐ Yes ☐ No	☐ Normally-Closed ☐ Normally-Open	DCS 2

Unit HUB - RAU		RAU Attenuation? Yes/No	RAU Serial No.	RAU Installation Location
AB-1-n		—	L010BEH9	2nd floor Telecom closet
AB-1	(RAU 1)	no	L010BRU1	Hallway, outside Boardroom
AB-2	(RAU 2)	no	L120BRU1	Hallway, outside #230
AB-3	(RAU 3)	yes	L007BRU1	Hallway, atrium north side
AB-4	(RAU 4)	no	L111BRU6	Hallway, outside #207
1-5	(RAU 5)			
1-6	(RAU 6)			
1-7	(RAU 7)			
1-8	(RAU 8)			
2-n		—		
2-1	(RAU 1)			
2-2	(RAU 2)			
2-3	(RAU 3)			
2-4	(RAU 4)			

LGC WIRELESS

InterReach Unison Accel Property Sheet

Installer:			Date:		Accel Hub Serial Number:
System Label:	System Gain: UL:	DL:	Alarm Sense: ☐ Yes ☐ No	☐ Normally-Closed ☐ Normally-Open	System Band:

Unit HUB - RAU		RAU Attenuation? Yes/No	RAU Serial No.	RAU Installation Location
1-n				
1-1	(RAU 1)			
1-2	(RAU 2)			
1-3	(RAU 3)			
1-4	(RAU 4)			
1-5	(RAU 5)			
1-6	(RAU 6)			
1-7	(RAU 7)			
1-8	(RAU 8)			
2-n				
2-1	(RAU 1)			
2-2	(RAU 2)			
2-3	(RAU 3)			
2-4	(RAU 4)			
2-5	(RAU 5)			
2-6	(RAU 6)			
2-7	(RAU 7)			
2-8	(RAU 8)			
3-n				
3-1	(RAU 1)			
3-2	(RAU 2)			
3-3	(RAU 3)			
3-4	(RAU 4)			
3-5	(RAU 5)			
3-6	(RAU 6)			
3-7	(RAU 7)			
3-8	(RAU 8)			
4-n				
4-1	(RAU 1)			
4-2	(RAU 2)			
4-3	(RAU 3)			
4-4	(RAU 4)			
4-5	(RAU 5)			
4-6	(RAU 6)			
4-7	(RAU 7)			
4-8	(RAU 8)			

APPENDIX C

Compliance

C.1 Unison System Approval Status

900 Paging/SMR

- Safety: UL 60950 3rd Edition
- EMC: FCC part 15 class A
- Radio: FCC Part 90

Cellular Products

- Safety: UL 60950 3rd Edition
- EMC: FCC part 15 class A
- Radio: FCC Part 22

DCS Products

- Safety: CB scheme evaluation to IEC 950, 3rd Edition with all national deviations
- EMC: EN 301 489-8 V.1.1.1 (2000-09), CISPR 24: 1998
- Radio: ETS 300 609-4 V.8.0.2 (2000-10)

GSM/EGSM Products

- Safety: CB scheme evaluation to IEC 950, 3rd Edition with all national deviations
- Radio: EN 301 502 V.7.0.1 (2000-08)
- EMC: EN 301 489-8 V.1.1.1 (2000-09), CISPR 24: 1998

iDEN Products

- Safety: UL 60950, 3rd Edition
- EMC: FCC part 15 class A
- Radio: FCC part 90

PCS Products

- Safety: UL 60950 3rd Edition
- EMC: FCC part 15 class A
- Radio: FCC part 24

UMTS Products

- Safety: CB scheme evaluation to IEC 950, 3rd Edition with all national deviations
- EMC: ETSI TS 125 113 V.4.1.0 (2001-06)
- Radio: ETSI TS 125 143 V.4.0.0 (2001-03)

Note for Canadian customers: The Manufacturer's rated output power[1] of this equipment is for single carrier operation. For situations when multiple carrier signals are present, the rating would have to be reduced by 3.5 dB, especially where the output signal is re-radiated and can cause interference to adjacent band users. This power reduction is to be by means of input power or gain reduction and not by an attenuator at the output of the device.

1. "Manufacturer's rated output power" refers to Unison's downlink P1dB. The power per carrier tables take into account this power reduction for multiple carriers.

C.2 Human Exposure to RF

The U.S. Federal Communications Commission (FCC) has adopted limits of human exposure to radio frequency (RF) emissions from portable or fixed RF systems that are regulated by the FCC. The exposure limits on the incident electric and magnetic fields and power densities are based on ANSI/IEEE and NCRP RF Safety Guidelines. The limits are also prescribed in terms of the mass-normalized rates of internal energy absorption by tissues (specific absorption rates or SARs) which should not exceed 0.08 W/kg as averaged over the whole body and 1.6 W/kg for any 1-g of tissue.

Similarly, the U.K. National Radiological Protection Board (NRPB) and the International Commission on Non-Ionizing Radiation Protection (ICNIRP) have both established guidelines for maximum RF exposure levels that are likely to not pose health risks. For the general public, ICNIRP recommends maximum exposure levels of 2.0 W/kg for any 10-g of tissue. This recommendation is 5 times lower than that of NRPB.

The specific absorption rate (SAR) was measured for a radiated power of 20 dBm (100 mW) which is the maximum radiated for both of the antennas. The highest SAR regions for each of the antennas for separation distances of 0, 1, 2, and 3 cm to the tissue-simulant model were determined in the first instance by using a coarser sampling with a step size of 8.0 mm over three overlapping scan areas for a total scan area of 8.0×9.6 cm. After identifying the regions of the highest SAR for each of the cases, the SAR distributions were measured with a resolution of 2 mm in order to obtain the peak 1 cm 3 or 1-g SAR.

Antenna gain is restricted to 1.5 W ERP (2.49 W EIRP) in order to satisfy RF exposure compliance requirements. If higher than 1.5 W ERP, routine MPE evaulation is needed. The antennas should be installed to provide at least 20 cm from all persons to satisfy MPE requirements of FCC Part 2, 2.1091.

APPENDIX D

Release Notes

D.1 Unison Accel Release 5

This document is for the Unison Accel products listed in the following table.

Table D-1 Unison Accel Release 5 Line-up

Unison Accel Component	Part Number	EPN*	Hardware Revision**	Firmware (FW) or Software (SW) Release*
Accel Hub	UNS-ACCEL-1	740510-2	C	010559 (FW)
RAU:				
PCS	UNS-PCS-2	740552-2	C	01053C (FW)
DCS	UNS-DCS-1	740553-1	D	01053C (FW)
GSM	UNS-GSM-1	740554-1	E	01052B (FW)
Cellular	UNS-CELL-1	740550-1	B	01052B (FW)
iDEN	UNS-IDEN-1	740551-0	A	01052B (FW)
UMTS	UNS-UMTS-1	740560-1	B	01052B (FW)
AdminManager	SW-ADM-V2	750001-0	N/A	v2.0 (SW)

* Use the Get Unit Info command in the AdminManager's Configuration & Maintenance Panel to verify the EPN and Firmware/Software Version of the component

** The hardware revision number is on a label on the back panel of the component