FCC Part 15
EMI TEST REPORT

of

E.U.T. : 2.4 GHZ Wireless Camera System
MODEL : 2176T / 2175T
FCC ID. : NOQJM2176T

for

APPLICANT : JESMAY ELECTRONICS CO., LTD.

ADDRESS : 74, CHUNG-DER 20TH STREET TAINAN, TAIWAN, R.O.C.

Test Performed by

ELECTRONICS TESTING CENTER, TAIWAN
NO. 34, LIN 5, DING FU TSUN, LINKOU HSIANG
TAIPEI HSIEN, TAIWAN, R.O.C.

Tel:(02)26023052, Fax:(02)26010910

http://www.etc.org.tw ; e-mail: etcemi@seed.net.tw

Report Number : ET92R-08-060-01

TEST REPORT CERTIFICATION

Applicant : JESMAY ELECTRONICS CO., LTD.
74, CHUNG-DER 20TH STREET TAINAN, TAIWAN, R.O.C.

Manufacturer : ZHONG SHAN JESMAY ELECTRONICS CO., LTD.
First Industry District, Tan Zhou, Zhong Shan, Canton, China

Description of EUT :

a) Type of EUT : 2.4 GHZ Wireless Camera System

b) Trade Name : JESMAY

c) Model No. : 2176T / 2175T

d) Power Supply : Adaptor:
I/P:AC120V/60Hz ; O/P:DC9V, 400mA

e) Working Frequency : 2400MHz~2483.5MHz

Regulation Applied : FCC Rules and Regulations Part 15 Subpart C (2002)

I HEREBY CERTIFY THAT: The data shown in this report were made in accordance with the procedures given in ANSI C63.4, and the energy emitted by the device was founded to be within the limits applicable. I assume full responsibility for accuracy and completeness of these data.

Note: 1. The result of the testing report relate only to the item tested.
2. The testing report shall not be reproduced expect in full, without the written approval of ETC.

Issued Date : Aug. 29, 2003

Test Engineer : Mic chen
(Mic Chen)

Approve & Authorized Signer : Will Yauo
Will Yauo, Manager
EMC Dept. II of ELECTRONICS
TESTING CENTER, TAIWAN

Table of Contents Page

1 GENERAL INFORMATION 1

1.1 Product Description 1
1.2 Characteristics of Device 1
1.3 Test Methodology 1
1.4 Test Facility 1

2 PROVISIONS APPLICABLE 2

2.1 Definition 2
2.2 Requirement for Compliance 3
2.3 Restricted Bands of Operation 5
2.4 Labeling Requirement 5
2.5 User Information 6

3. SYSTEM TEST CONFIGURATION 7

3.1 Justification 7
3.2 Devices for Tested System 7

4 RADIATED EMISSION MEASUREMENT 8

4.1 Applicable Standard 8
4.2 Measurement Procedure 8
4.3 Measuring Instrument 10
4.4 Radiated Emission Data 11
4.4.1 RF Portion 11
A. CH LO 11
4.4.2 Other Emission 14
4.5 Field Strength Calculation 14
4.6 Photos of Radiation Measuring Setup 15

5 CONDUCTED EMISSION MEASUREMENT 16

5.1 Standard Applicable 16
5.2 Measurement Procedure 16
5.3 Conducted Emission Data 17
5.5 Conducted Measurement Equipment 19
5.6 Photos of Conduction Measuring Setup 20

6 ANTENNA REQUIREMENT 21

6.1 Standard Applicable 21
6.2 Antenna Construction 21

7 BAND EDGES MEASUREMENT 22

7.1 Standard Applicable.....22
7.2 Measurement Procedure 22
7.3 Measurement Equipment 22
7.4 Measurement Data 22

APPENDIX 1 : PLOTTED DATA OF POWER LINE CONDUCTED EMISSIONS 23

APPENDIX 2 : PLOTTED DATA OF BAND EDGES EMISSION 30

1 GENERAL INFORMATION

1.1 Product Description

a) Type of EUT : 2.4 GHZ Wireless Camera System

b) Trade Name : JESMAY

c) Model No. : 2176T / 2175T

d) Power Supply : Adaptor:
I/P:AC120V/60Hz ; O/P:DC9V, 400mA

1.2 Characteristics of Device

1. Transmit Frequency : (4 Channels) 2400-2483MHz
2. Output power(max) : 0dBm
3. Operational range : up to 100 meters (open air situation)
4. Power consumption(max) : 1.5 Watts
5. Dimension : 155mm×60mm×52mm

1.3 Test Methodology

For 2.4 GHZ Wireless Camera System, both conducted and radiated emissions were performed according to the procedures illustrated in ANSI C63.4 (1992). Other required measurements were illustrated in separate sections of this test report for details.

1.4 Test Facility

The open area test site and conducted measurement facility used to collect the radiated data is located on the roof top of Building at No.34, Lin 5, Ding Fu Tsun, Linkou Hsiang, Taipei Hsien, Taiwan, R.O.C.

This site has been fully described in a report submitted to your office, and accepted in a letter dated Feb. 10, 2000.

2 PROVISIONS APPLICABLE

2.1 Definition

Unintentional radiator:
A device that intentionally generates and radio frequency energy for use within the device, or that sends radio frequency signals by conduction to associated equipment via connecting wiring, but which is not intended to emit RF energy by radiation or induction.

Class A Digital Device:
A digital device which is marketed for use in commercial or business environment; exclusive of a device which is market for use by the general public, or which is intended to be used in the home.

Class B Digital Device :
A digital device which is marketed for use in a residential environment notwithstanding use in a commercial, business of industrial environment. Example of such devices that are marketed for the general public.

Note : A manufacturer may also qualify a device intended to be marketed in a commercial, business, or industrial environment as a Class B digital device, and in fact is encouraged to do so, provided the device complies with the technical specifications for a Class B Digital Device. In the event that a particular type of device has been found to repeatedly cause harmful interference to radio communications, the Commission may classify such a digital device as a Class B Digital Device, Regardless of its intended use.

Intentional radiator:
A device that intentionally generates and emits radio frequency energy by radiation or induction.

2.2 Requirement for Compliance

(1) Conducted Emission Requirement

Except for Class A digital devices, for equipment that is designed to be connected to the public utility (AC) power line, the radio frequency voltage that is conducted back onto the AC power line on any frequency or frequencies within the band 150kHz to 30MHz shall not exceed the limits in the following table, as measured using a 50ìH/50 ohms line impedance stabilization network (LISN). Compliance with the provisions of this paragraph shall be based on the measurement of the radio frequency voltage between each power line and ground at the power terminal. The lower limit applies at the band edges.

Frequency MHz	Quasi Peak dBì V	Average dBì V
0.15 - 0.5	66-56*	56-46*
0.5 - 5.0	56	46
5.0 - 30.0	60	50

* Decreases with the logarithm of the frequency

(2) Radiated Emission Requirement

For unintentional device, according to §15.109(a), except for Class A digital devices, the field strength of radiated emissions from unintentional radiators at a distance of 3 meters shall not exceed the following values:

Frequency MHz	Distance Meters	Radiated dBì V/m	Radiated ì V/m
30 - 88	3	40.0	100
88 - 216	3	43.5	150
216 - 960	3	46.0	200
Above 960	3	54.0	500

For intentional device, according to §15.209(a), the general requirement of field strength of radiated emissions from intentional radiators at a distance of 3 meters shall not exceed the above table.

For intentional radiator device, per §15.249(a), the field strength of emissions shall comply with the following :

Frequency MHz	Distance Meters	Fundamental dBì V/m	Fundamental mV/m	Harmonic dBì V/m	Harmonic ì V/m
902 - 928	3	94	50	54	500
2400 - 2483.5	3	94	50	54	500
5725 - 5875	3	94	50	54	500
24000 - 24250	3	108	250	68	2500

In accordance with §15.249(d), limits shown in above table are based on average limits for frequencies above 1000 MHz, and frequencies below 1000 MHz are based on quasi peak. However, the peak field strength of any emission shall not exceed the maximum permitted average limits by more than 20 dB.

(3) Spurious in Out Band Requirement

For intentional device, according to §15.249 (c), emissions radiated outside of the specified frequency bands, except for harmonics, shall be attenuated by at least 50 dB below the level of fundamental or to the general radiated emission limits in §15.209.

(4) Antenna Requirement

For intentional device, according to §15.203, an intentional radiator shall be designed to ensure that no antenna other than that furnished by the responsible party shall be used with the device.

2.3 Restricted Bands of Operation

Only spurious emissions are permitted in any of the frequency bands listed below :

MHz	MHz	MHz	GHz
0.090 - 0.110	16.42-16.423	399.9-410	4.5-5.15
0.495 - 0.505 **	16.69475 - 16.69525	608-614	5.35-5.46
2.1735 - 2.1905	16.80425 - 16.80475	960-1240	7.25-7.75
4.125-4.128	25.5-25.67	1300-1427	8.025-8.5
4.17725-4.17775	37.5-38.25	1435-1626.5	9.0-9.2
4.20725-4.20775	73-74.6	1645.5-1646.5	9.3-9.5
6.215-6.218	74.8-75.2	1660-1710	10.6-12.7
6.26775-6.26825	108-121.94	1718.8-1722.2	13.25-13.4
6.31175-6.31225	123-138	2200-2300	14.47-14.5
8.291-8.294	149.9-150.05	2310-2390	15.35-16.2
8.362-8.366	156.52475 - 156.52525	2483.5-2500	17.7-21.4
8.37625-8.38675	156.7-156.9	2655-2900	22.01-23.12
8.41425-8.41475	162.0125-167.17	3260-3267	23.6-24.0
12.29-12.293	167.72-173.2	3332-3339	31.2-31.8
12.51975-12.52025	240-285	3345.8-3358	36.43-36.5
12.57675-12.57725	322-335.4	3360-4400	Above 38.6
13.36-13.41			

** : Until February 1, 1999, this restricted band shall be 0.490-0.510 MHz

2.4 Labeling Requirement

The device shall bear the following statement in a conspicuous location on the device:

This device complies with part 15 of the FCC Rules. Operation is subject to the following two conditions: (1) This device may not cause harmful interference, and (2) this device must accept any interference received, including interference that may cause undesired operation.

2.5 User Information

The users manual or instruction manual for an intentional or unintentional radiator shall caution the user that changes or modifications not expressly approved by the party responsible for compliance could void the user's authority to operate the equipment.

For a Class B digital device or peripheral, the instructions furnished the user shall include the following or similar statement, placed in a prominent location in the text of the manual.

The Federal Communications Commission Radio Frequency Interference Statement includes the following paragraph.

This equipment has been tested and found to comply with the limits for a Class B Digital Device, pursuant to Part 15 of the FCC Rules. These limits are designed to provide reasonable protection against harmful interference in a residential installation.

This equipment generates, uses and can radiate radio frequency energy and, if not installed and used in accordance with the instruction may cause harmful interference to radio communication. However, there is no guarantee that interference will not occur in a particular installation.

If this equipment does cause harmful interference to radio or television reception, which can be determined by turning the equipment off and on, the user is encouraged to try to correct the interference by one or more of the following measures:

-- Reorient or relocate the receiving antenna.

-- Increase the separation between the equipment and receiver.

-- Connect the equipment into an outlet on a circuit different from that to which the receiver is connected.

-- Consult the dealer or an experienced radio / TV technician for help.

3. SYSTEM TEST CONFIGURATION

3.1 Justification

For both radiated and conducted emissions, the system was configured for testing in a typical fashion as a customer would normally use it. The peripherals other than EUT were connected in normally standing by situation.

All measurement were intentional to maximum the emissions from EUT by varying the connection cables, therefore, the test result is sure to meet the applicable requirement.

3.2 Devices for Tested System

Device	Manufacture	Model / FCC ID.	Description
2.4 GHZ Wireless Camera System *	ZHONG SHAN JESMAY ELECTRONICS CO., LTD.	2176T / 2175T NOQJM2176T	----

Remark "*" means equipment under test.

4 RADIATED EMISSION MEASUREMENT

4.1 Applicable Standard

For intentional radiators, according to §15.249 (a), operation within the frequency band of 2.4 to 2.4835 GHz, the fundamental field strength shall not exceed 94 dBuV/m and the harmonics shall not exceed 54 dBuV/m. For out band emission except for harmonics shall be comply with §15.209 or at least attenuated by 50 dB below the level of the fundamental.

4.2 Measurement Procedure

1. Setup the configuration per figure 5 and 6 for frequencies measured below and above 1 GHz respectively.
2. For emission frequencies measured below 1 GHz, a pre-scan is performed in a shielded chamber to determine the accurate frequencies of higher emissions will be checked on a open test site. As the same purpose, for emission frequencies measured above 1 GHz, a pre-scan also be performed with a 1 meter measuring distance before final test.
3. For emission frequencies measured below and above 1 GHz, set the spectrum analyzer on a 100 kHz and 1 MHz resolution bandwidth respectively for each frequency measured in step 2.
4. The search antenna is to be raised and lowered over a range from 1 to 4 meters in horizontally polarized orientation. Position the highness when the highest value is indicated on spectrum analyzer, then change the orientation of EUT on test table over a range from 0 to 360 with a speed as slow as possible, and keep the azimuth that highest emission is indicated on the spectrum analyzer. Vary the antenna position again and record the highest value as a final reading.

   Note : A band pass filter was used to avoid pre-amplifier saturated when measure TX operation mode in frequency band above 1 GHz.
5. Repeat step 4 until all frequencies need to be measured were complete.
6. Repeat step 5 with search antenna in vertical polarized orientations.
7. Check the three frequencies of highest emission with varying the placement of cables associated with EUT to obtain the worse case and record the result.

Figure 1 : Frequencies measured below 1 GHz configuration

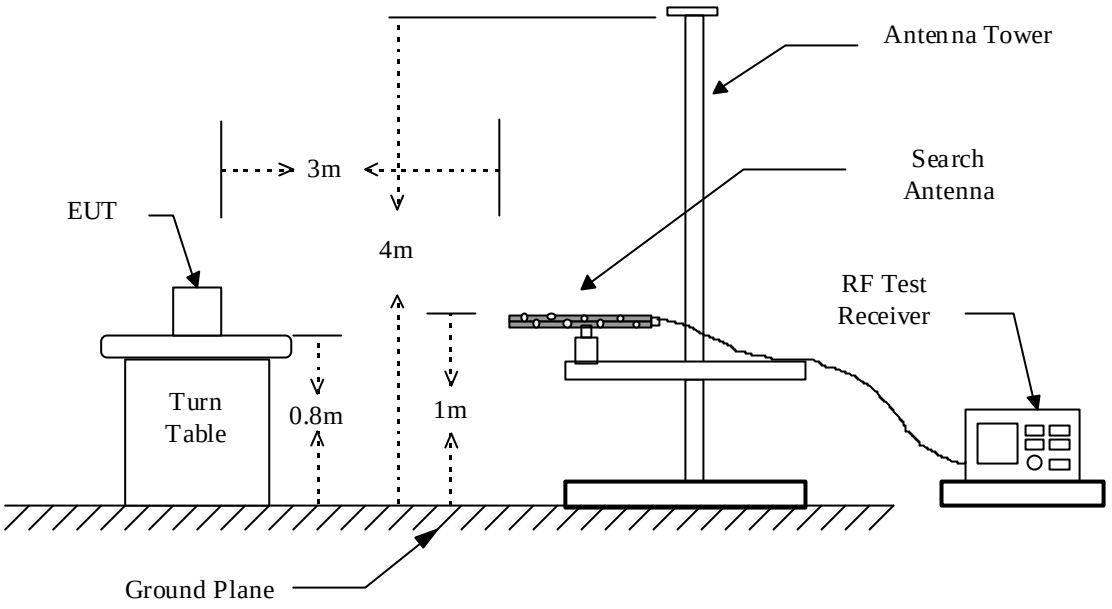

Figure 2 : Frequencies measured above 1 GHz configuration

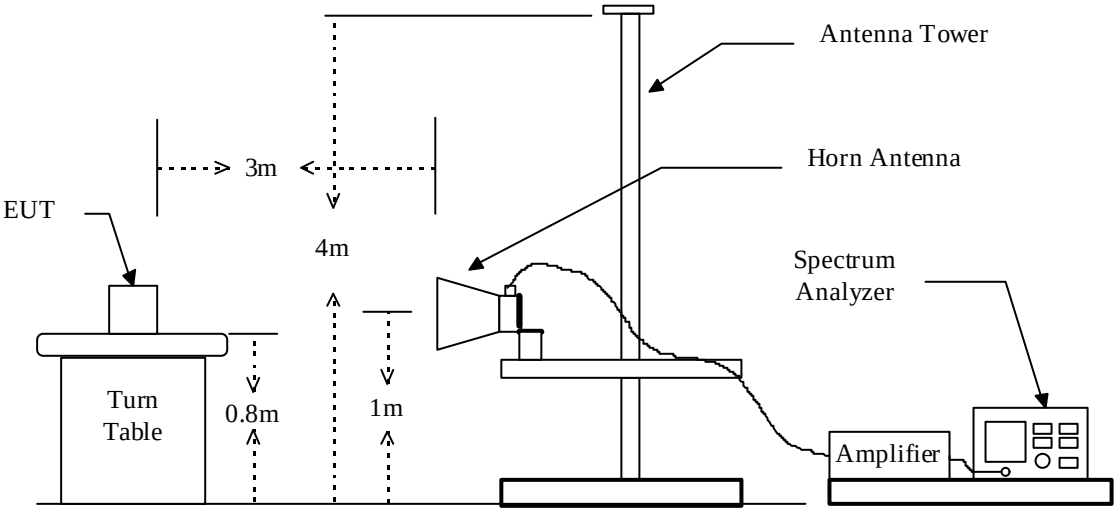

4.3 Measuring Instrument

The following instrument are used for radiated emissions measurement:

Equipment	Manufacturer	Model No.	Next Cal. Date
Spectrum Analyzer	Hewlett-Packard	8568B	01/01/2004
Pre-selector	Hewlett-Packard	85685A	01/01/2004
Quasi Peak Detector	Hewlett-Packard	85650A	01/01/2004
RF Test Receiver	Rohde & Schwarz	ESVS 30	08/11/2004
Log periodic Antenna	EMCO	3146	11/04/2003
Biconical Antenna	EMCO	3110B	11/04/2003
Horn Antenna	EMCO	3115	05/09/2004
Horn Antenna	EMCO	3116	03/10/2004
Preamplifier	Hewlett-Packard	8447D	10/14/2003
Preamplifier	Hewlett-Packard	8449B	05/10/2004
Spectrum Analyzer	Hewlett-Packard	8564E	04/14/2004

Measuring instrument setup in measured frequency band when specified detector function is used :

Frequency Band (MHz)	Instrument	Function	Resolution bandwidth	Video Bandwidth
30 to 1000	RF Test Receiver	Quasi-Peak	120 kHz	N/A
	Spectrum Analyzer	Peak	100 kHz	100 kHz
Above 1000	Spectrum Analyzer	Peak	1 MHz	1 MHz
	Spectrum Analyzer	Average	1 MHz	300Hz

4.4 Radiated Emission Data

4.4.1 RF Portion

A. CH 1

Operation Mode : TX
Fundamental Frequency : 2414.000 MHz
Test Date : Aug. 15, 2003 Temperature: 25 ℃ Humidity : 70 %

Frequency (MHz)	Reading (dBuV) H Peak	H Ave	V Peak	V Ave	Factor (dB) Corr.	Result @3m (dBuV/m) Peak	Result Ave	Limit @3m (dBuV/m) Peak	Limit Ave.	Margin (dB)	Table Deg. (Deg.)	Ant. High (m)
2414.000	87.4	80.3	99.3	87.6	-3.0	96.3	84.6	114.0	94.0	-9.4	0	1.40
4828.000	46.7	39.7	48.7	43.7	2.6	51.3	46.3	74.0	54.0	-7.7	341	1.40
7242.000	---	---	---	---	5.8	---	---	74.0	54.0	---	---	---
9656.000	---	---	---	---	7.3	---	---	74.0	54.0	---	---	---
12070.000	---	---	---	---	9.2	---	---	74.0	54.0	---	---	---
14484.000	---	---	---	---	11.6	---	---	74.0	54.0	---	---	---
16898.000	---	---	---	---	12.2	---	---	74.0	54.0	---	---	---
19312.000	---	---	---	---	8.8	---	---	74.0	54.0	---	---	---
21726.000	---	---	---	---	9.8	---	---	74.0	54.0	---	---	---
24140.000	---	---	---	---	10.4	---	---	74.0	54.0	---	---	---

Note :

1. Item of margin shown in above table refer to average limit.
2. Remark "---" means that the emission level is too low to be measured, with a preamplifier of 35 dB.
3. Measuring data showed on above table was derived with peak detector function.
4. It is considered that the results of average comply with average limit when measuring data with a peak function detector meet the average limit. Mark "***" means that Peak result is meet average limit.
5. The expanded uncertainty of the radiated emission tests is 3.53 dB.

B. CH 2

Operation Mode : TX
Fundamental Frequency : 2432.000 MHz
Test Date : Aug. 15, 2003 Temperature : 25 ℃ Humidity : 70 %

Frequency (MHz)	Reading (dBuV) H Peak	H Ave	V Peak	V Ave	Factor (dB) Corr.	Result @3m (dBuV/m) Peak	Result Ave	Limit @3m (dBuV/m) Peak	Limit Ave.	Margin (dB)	Table Deg. (Deg.)	Ant. High (m)
2432.000	83.8	82.5	97.2	95.8	-3.0	94.2	92.8	114.0	94.0	-1.2	331	1.20
4864.000	48.8	42.8	48.5	42.5	2.7	51.5	45.5	74.0	54.0	-8.5	36	1.30
7296.000	---	---	---	---	5.9	---	---	74.0	54.0	---	---	---
9728.000	---	---	---	---	7.3	---	---	74.0	54.0	---	---	---
12160.000	---	---	---	---	9.3	---	---	74.0	54.0	---	---	---
14592.000	---	---	---	---	11.6	---	---	74.0	54.0	---	---	---
17024.000	---	---	---	---	12.9	---	---	74.0	54.0	---	---	---
19456.000	---	---	---	---	8.6	---	---	74.0	54.0	---	---	---
21888.000	---	---	---	---	9.9	---	---	74.0	54.0	---	---	---
24320.000	---	---	---	---	10.6	---	---	74.0	54.0	---	---	---

Note :

1. Item of margin shown in above table refer to average limit.
2. Remark "---" means that the emission level is too low to be measured, with a preamplifier of 35 dB.
3. Measuring data showed on above table was derived with peak detector function.
4. It is considered that the results of average comply with average limit when measuring data with a peak function detector meet the average limit. Mark "***" means that Peak result is meet average limit.
5. The expanded uncertainty of the radiated emission tests is 3.53 dB.

C. CH 4

Operation Mode : TX
Fundamental Frequency : 2468.000 MHz
Test Date : Aug. 15, 2003 Temperature: 25 ℃ Humidity : 70 %

Frequency (MHz)	Reading (dBuV) H Peak	H Ave	V Peak	V Ave	Factor (dB) Corr.	Result @3m (dBuV/m) Peak	Result Ave	Limit @3m (dBuV/m) Peak	Limit Ave.	Margin (dB)	Table Deg. (Deg.)	Ant. High (m)
2468.000	83.7	81.3	93.7	91.8	-2.8	90.8	89.0	114.0	94.0	-5.0	331	1.30
4936.000	52.2	48.7	51.2	47.8	2.8	55.0	51.5	74.0	54.0	-2.5	0	1.20
7404.000	---	---	45.5	33.2	6.0	51.5	39.2	74.0	54.0	-14.8	284	1.40
9872.000	---	---	---	---	7.3	---	---	74.0	54.0	---	---	---
12340.000	---	---	---	---	9.3	---	---	74.0	54.0	---	---	---
14808.000	---	---	---	---	11.5	---	---	74.0	54.0	---	---	---
17276.000	---	---	---	---	14.6	---	---	74.0	54.0	---	---	---
19744.000	---	---	---	---	8.5	---	---	74.0	54.0	---	---	---
22212.000	---	---	---	---	10.1	---	---	74.0	54.0	---	---	---
24680.000	---	---	---	---	10.9	---	---	74.0	54.0	---	---	---

Note :

1. Item of margin shown in above table refer to average limit.
2. Remark "---" means that the emission level is too low to be measured, with a preamplifier of 35 dB.
3. Measuring data showed on above table was derived with peak detector function.
4. It is considered that the results of average comply with average limit when measuring data with a peak function detector meet the average limit. Mark "***" means that Peak result is meet average limit.
5. The expanded uncertainty of the radiated emission tests is 3.53 dB.

4.4.2 Other Emission

a) Emission frequencies below 1 GHz

Test Date : Aug. 15, 2003 Temperature: 25 ℃ Humidity : 70 %

Frequency (MHz)	Ant-Pol H/V	Meter Reading (dBuV)	Corrected Factor (dB)	Result @3m (dBuV/m)	Limit @3m (dBuV/m)	Margin (dB)	Table Degree (Deg.)	Ant. High (m)
731.209	H	25.1	-0.7	24.4	46.0	-21.6	180	4.0
764.581	V	25.3	-0.3	25.0	46.0	-21.0	144	4.0
779.003	V	25.7	-0.1	25.6	46.0	-20.4	121	1.0
880.123	V	25.1	2.3	27.4	46.0	-18.6	134	1.5
888.514	V	25.3	2.2	27.5	46.0	-18.5	105	2.0
943.736	H	25.9	3.1	29.0	46.0	-17.0	46	2.2

Note :

1. Remark “---” means that the emission level is too low to be measured.
2. The expanded uncertainty of the radiated emission tests is 3.53 dB.

b) Emission frequencies above 1 GHz

Radiated emission frequencies above 1 GHz to 25 GHz were too low to be measured with a pre-amplifier of 35 dB.

4.5 Field Strength Calculation

The field strength is calculated by adding the Antenna Factor, High Pass Filter Loss(if used) and Cable Loss, and subtracting the Amplifier Gain (if any) from the measured reading. The basic equation calculation is as follows:

Result = Reading + Corrected Factor

where Corrected Factor

= Antenna FACTOR + Cable Loss + High Pass Filter Loss - Amplifier Gain

4.6 Photos of Radiation Measuring Setup

Please see Exhibit F-Test Setup Photos

5 CONDUCTED EMISSION MEASUREMENT

5.1 Standard Applicable

For unintentional and intentional device, Line Conducted Emission Limits are in accordance to §15.107(a) and §15.207(a) respectively.

5.2 Measurement Procedure

1. Setup the configuration per figure 3.
2. A preliminary scan with a spectrum monitor is performed to identify the frequency of emission that has the highest amplitude relative to the limit by operating the EUT in selected modes of operation, typical cable positions, and with a typical system configuration.
3. Record the 6 or 8 highest emissions relative to the limit.
4. Measure each frequency obtained from step 3 by a test receiver set on quasi peak detector function, and then record the accuracy frequency and emission level. If all emissions measured in the specified band are attenuated more than 20 dB from the limit, this step would be ignored, and the peak detector function would be used.
5. Confirm the highest three emissions with variation of the EUT cable configuration and record the final data.
6. Repeat all above procedures on measuring each operation mode of EUT.

Figure 3 : Conducted emissions measurement configuration

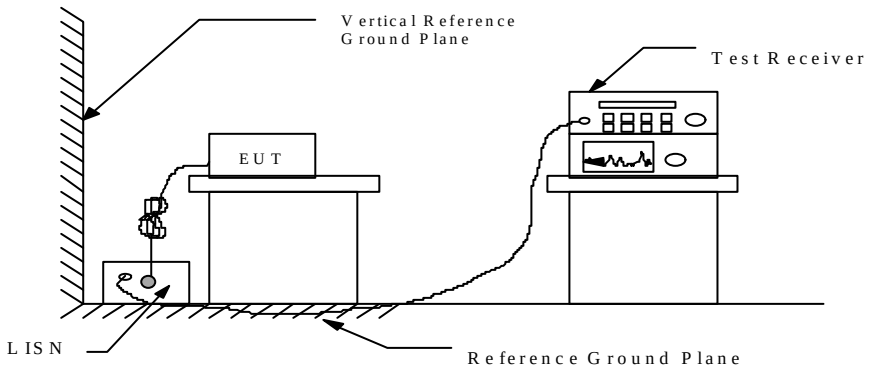

5.3 Conducted Emission Data

Operation Mode : CH 1

Test Date : Aug. 15, 2003 Temperature: 25 ℃ Humidity: 70%

Freq.	Meter Reading (dBìV)				Factor	Limit (dBìV)		Result (dBìV)			
	Q.P Value		AVG. Value			Q.P	AVG.	Q.P Value		AVG. Value	
(MHz)	N	L1	N	L1	(dB)	Value	Value	N	L1	N	L1
0.2164	39.5	36.1	----	----	0.2	63.0	53.0	39.7	36.3	----	----
0.2867	36.6	38.5	----	----	0.2	60.6	50.6	36.8	38.7	----	----
0.4156	26.6	36.7	----	----	0.3	57.5	47.5	26.9	37.0	----	----
0.4351	26.8	27.9	----	----	0.3	57.2	47.2	27.1	28.2	----	----
0.5546	26.1	25.4	----	----	0.3	56.0	46.0	26.4	25.7	----	----
0.6953	20.9	28.1	----	----	0.3	56.0	46.0	21.2	28.4	----	----

Operation Mode : CH 2

Test Date : Aug. 15, 2003 Temperature: 25 ℃ Humidity: 70%

Freq.	Meter Reading (dBìV)				Factor	Limit (dBìV)		Result (dBìV)			
	Q.P Value		AVG. Value			Q.P	AVG.	Q.P Value		AVG. Value	
(MHz)	N	L1	N	L1	(dB)	Value	Value	N	L1	N	L1
0.1695	41.2	40.6	----	----	0.2	65.0	55.0	41.4	40.8	----	----
0.1929	40.5	40.5	----	----	0.2	63.9	53.9	40.7	40.7	----	----
0.2828	37.7	39.9	----	----	0.2	60.7	50.7	37.9	40.1	----	----
0.4195	34.4	37.9	----	----	0.3	57.5	47.5	34.7	38.2	----	----
0.4312	33.5	27.4	----	----	0.3	57.2	47.2	33.8	27.7	----	----
0.7695	25.9	20.5	----	----	0.3	56.0	46.0	26.2	20.8	----	----

Note : 1. Please see appendix 1 for Plotted Data

2. The expanded uncertainty of the conducted emission tests is 2.45 dB.

Operation Mode : CH 4

Test Date : Aug. 15, 2003 Temperature: 25 ℃ Humidity: 70%

Freq.	**Meter Reading** (dBìV)				**Factor**	**Limit** (dBìV)		**Result** (dBìV)			
	Q.P Value		AVG. Value			Q.P	AVG.	Q.P Value		AVG. Value	
(MHz)	N	L1	N	L1	(dB)	Value	Value	N	L1	N	L1
0.2359	39.1	41.1	----	----	0.2	62.2	52.2	39.3	41.3	----	----
0.4507	31.2	31.2	----	----	0.3	56.9	46.9	31.5	31.5	----	----
0.5468	26.5	24.3	----	----	0.3	56.0	46.0	26.8	24.6	----	----
0.7187	26.1	24.1	----	----	0.3	56.0	46.0	26.4	24.4	----	----
0.8789	22.9	23.2	----	----	0.3	56.0	46.0	23.2	23.5	----	----
1.0625	17.6	21.1	----	----	0.3	56.0	46.0	17.9	21.4	----	----

Note : 1. Please see appendix 1 for Plotted Data

2. The expanded uncertainty of the conducted emission tests is 2.45 dB.

5.4 Result Data Calculation

The result data is calculated by adding the LISN Factor to the measured reading. The basic equation with a sample calculation is as follows:

RESULT = READING + LISN FACTOR

Assume a receiver reading of 22.5 dBìV is obtained, and LISN Factor is 0.1 dB, then the total of disturbance voltage is 22.6 dBìV.

RESULT = 22.5 + 0.1 = 22.6 dBìV
Level in ìV = Common Antilogarithm[(22.6 dBìV)/20]
= 13.48 ìV

5.5 Conducted Measurement Equipment

The following test equipment are used during the conducted test.

Equipment	Manufacturer	Model No.	Next Cal. Due
EMI Test Receiver	Rohde and Schwarz	ESCS 30	11/27/2003
Line Impedance Stabilization network	Rohde and Schwarz	ESH2-Z5	09/03/2003
Monitor	IBM	E54	N.C.R.
Printer	HP	LaserJet 1000	N.C.R.
Shielded Room	Riken		N.C.R.
Computer	Acer	Veriton	N.C.R.
EMI Test Receiver	Rohde and Schwarz	ESCS 30	11/27/2003

5.6 Photos of Conduction Measuring Setup

Please see Exhibit F-Test Setup Photos

6 ANTENNA REQUIREMENT

6.1 Standard Applicable

According to §15.203, an intentional radiator shall be designed to ensure that no antenna other than that furnished by the responsible party shall be used with the device.

6.2 Antenna Construction

The antenna is an omni-directional antenna. Please see construction Photos Of Exhibit B for details.

7 BAND EDGES MEASUREMENT

7.1 Standard Applicable

According to 15.249(c), out band emission except for harmonics shall be comply with §15.209 or at least attenuated by 50 dB below the level of the fundamental.

7.2 Measurement Procedure

1. Check the calibration of the measuring instrument using either an internal calibrator or a known signal from an external generator.
2. Position the EUT as shown in figure 4 without connection to measurement instrument. Turn on the EUT and connect its antenna terminal to measurement instrument via a low loss cable. Then set it to any one measured frequency within its operating range and make sure the instrument is operated in its linear range.
3. Measure the highest amplitude appearing on spectral display and set it as a reference level. Plot the graph with marking the highest point and edge frequency.
4. Repeat above procedures until all measured frequencies were complete.

7.3 Measurement Equipment

Equipment	Manufacturer	Model No.	Next Cal. Date
Spectrum Analyzer	Hewlett-Packard	8564E	04/16/2004
Plotter	Hewlett-Packard	7440A	N/A

7.4 Measurement Data

Test Result:

1. *Lower band edge: Emission radiated outside of the lower band edge is attenuated by at least 50dB below the level of the fundamental.*
2. *Upper band edge: Emission radiated outside of the upper band edge is attenuated by at least 50dB below the level of the fundamental.*

Note : 1. The expanded uncertainty of the band edges tests is 1000Hz.
2. Please see appendix 2 for Plotted Data

Appendix 1 : Plotted Data of Power Line Conducted Emissions

CONDUCTION EMISSION TEST

Peak Value

EUT:	2176T
Manuf:	
Op Cond:	CH1
Operator:	
Test Spec:	
Comment:	
	N

Final Measurement:	Detector:	X QP
	Meas Time:	1sec
	Peaks:	8
	Acc Margin:	25 dB

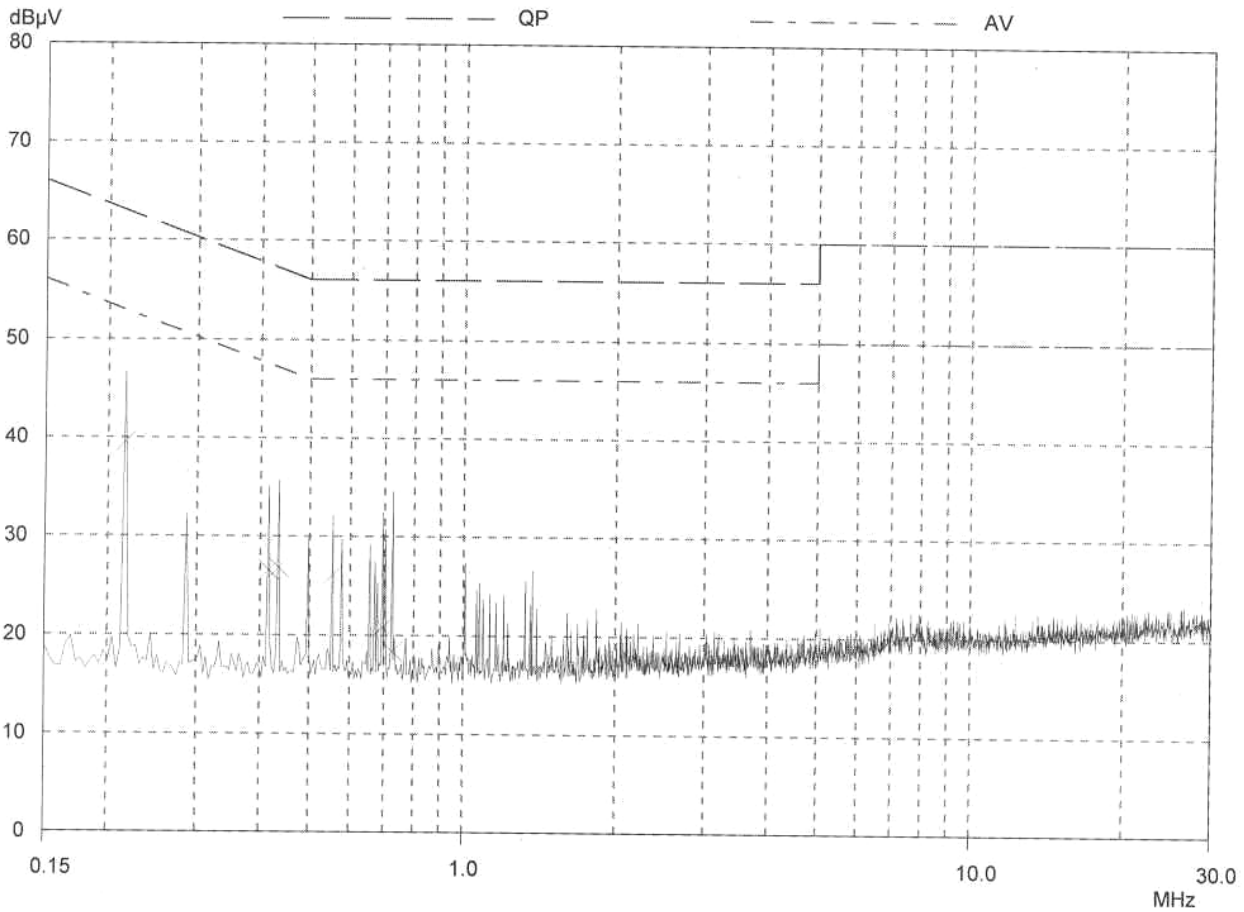

CONDUCTION EMISSION TEST

Peak Value

EUT:	2176T
Manuf:	
Op Cond:	CH1
Operator:	
Test Spec:	
Comment:	
	L1

Final Measurement:	Detector:	X QP
	Meas Time:	1sec
	Peaks:	8
	Acc Margin:	25 dB

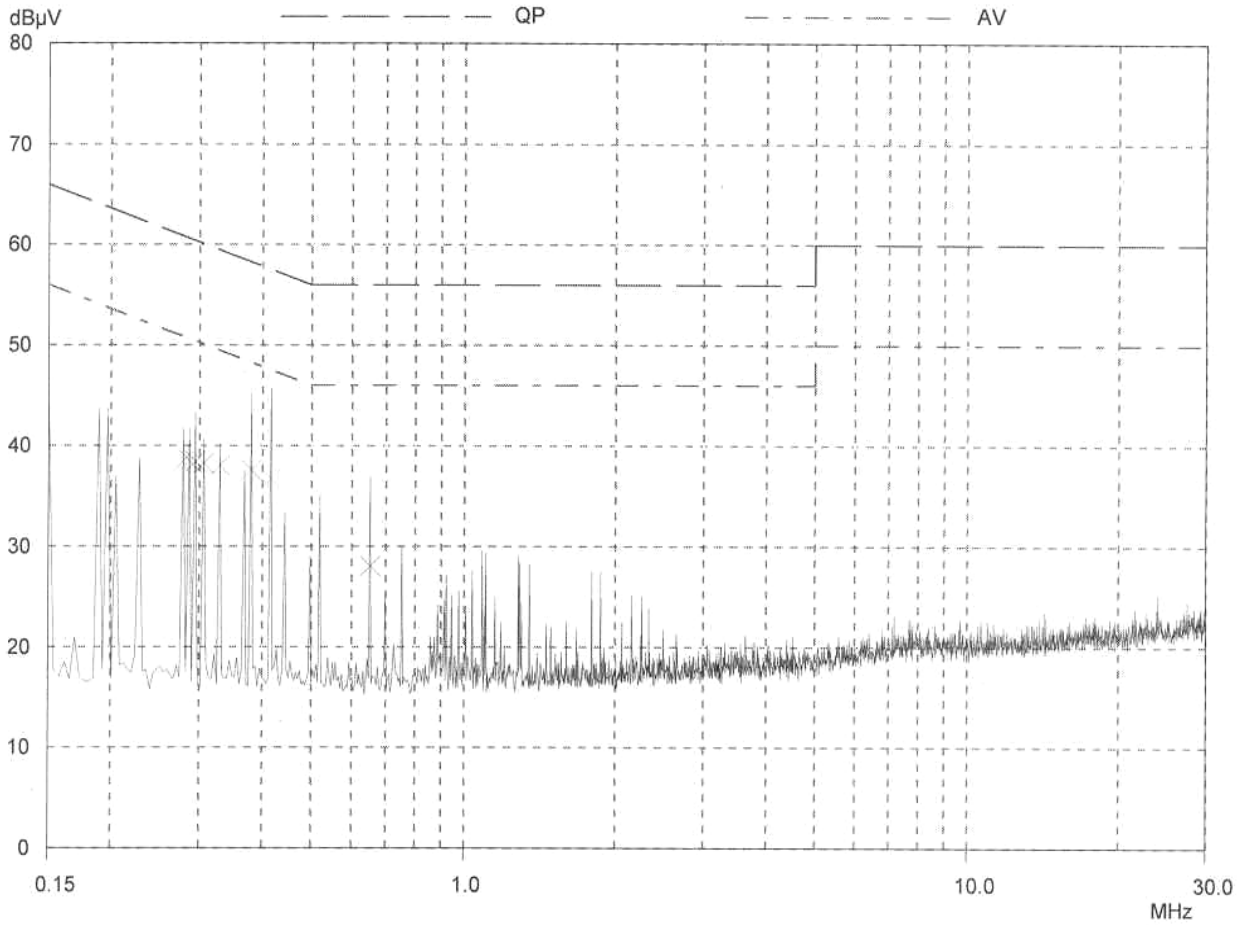

CONDUCTION EMISSION TEST

Peak Value

EUT:	2176T
Manuf:	
Op Cond:	CH2
Operator:	
Test Spec:	
Comment:	
	N

Final Measurement:	Detector:	X QP
	Meas Time:	1sec
	Peaks:	8
	Acc Margin:	25 dB

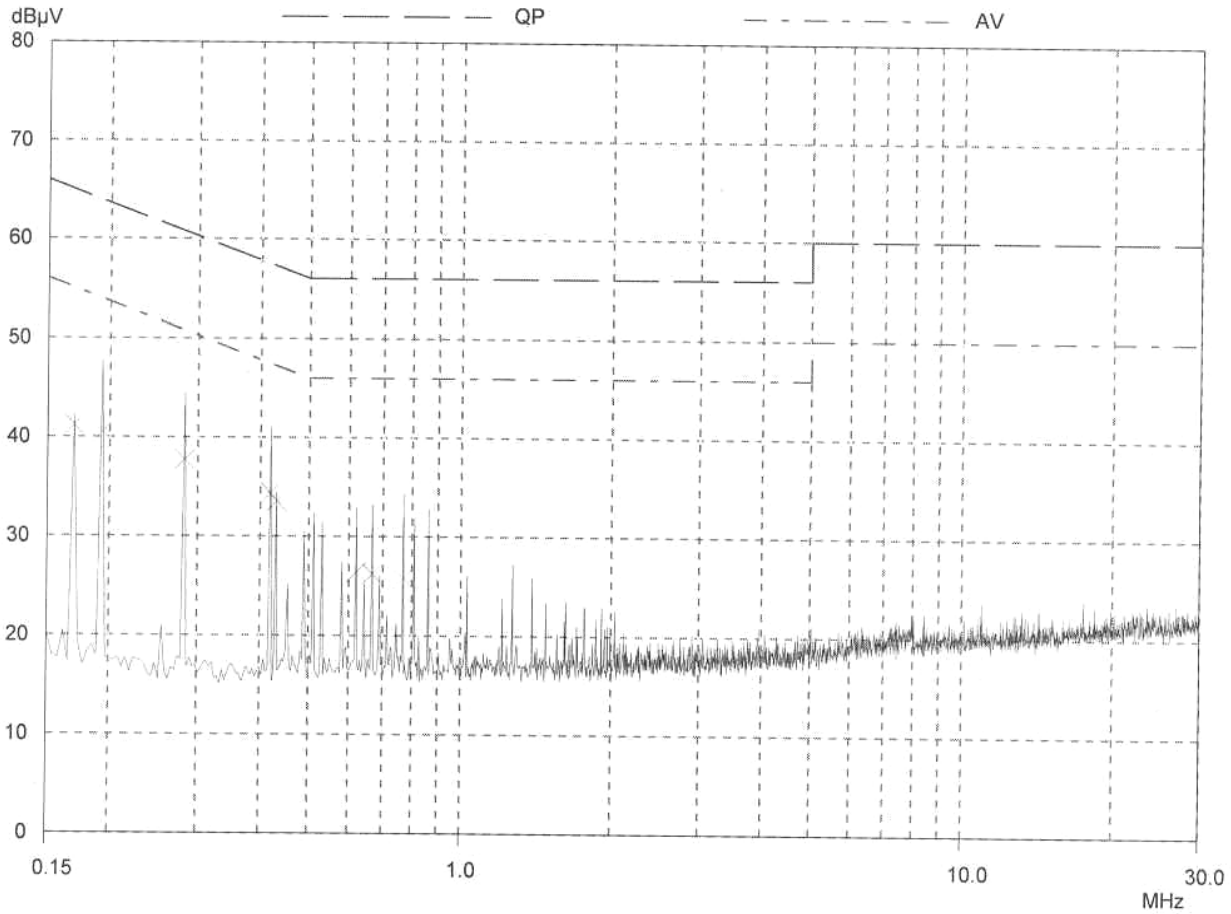

CONDUCTION EMISSION TEST

Peak Value

EUT:	2176T
Manuf:	
Op Cond:	CH2
Operator:	
Test Spec:	
Comment:	
	L1

Final Measurement:	Detector:	X QP
	Meas Time:	1sec
	Peaks:	8
	Acc Margin:	25 dB

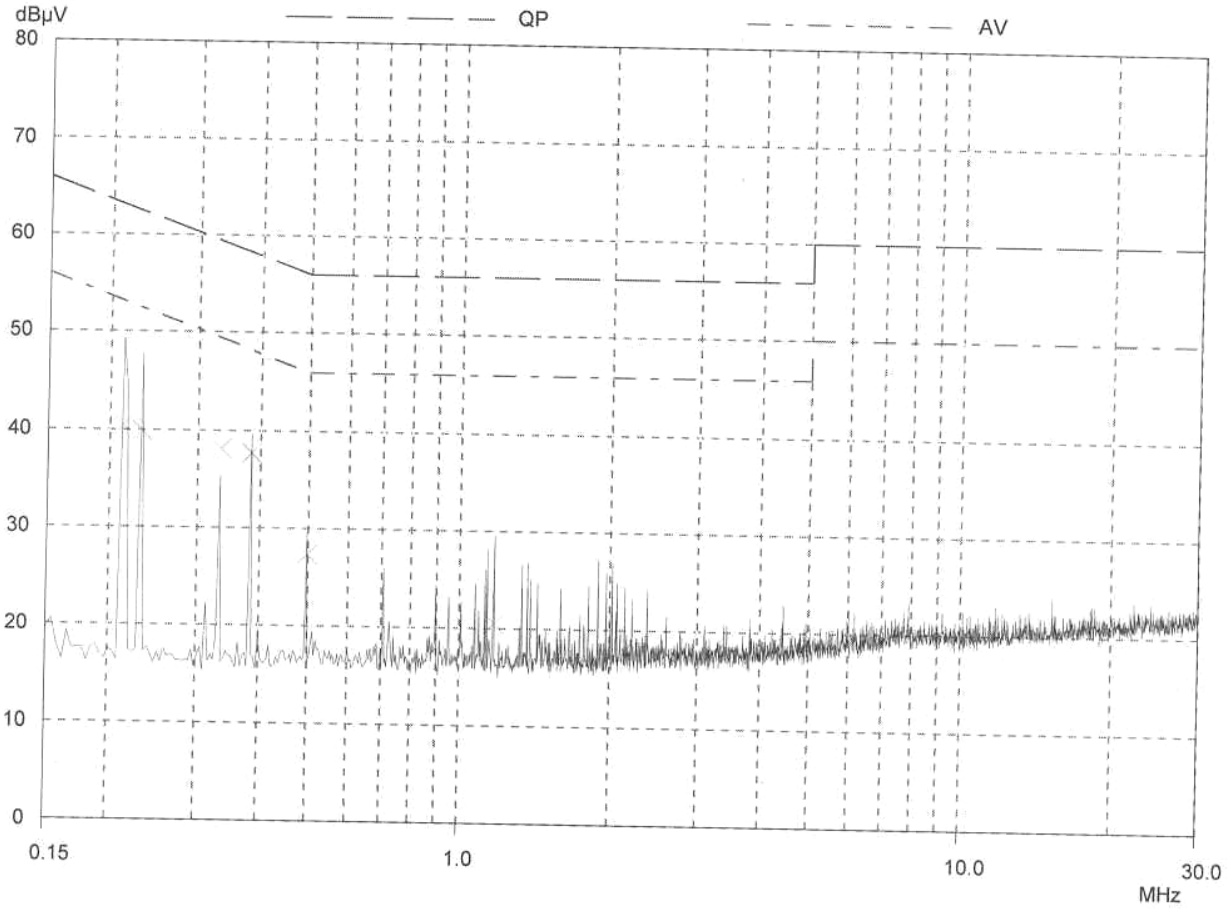

CONDUCTION EMISSION TEST

Peak Value

EUT:	2176T
Manuf:	
Op Cond:	CH4
Operator:	
Test Spec:	
Comment:	
	N

Final Measurement:	Detector:	X QP
	Meas Time:	1sec
	Peaks:	8
	Acc Margin:	25 dB

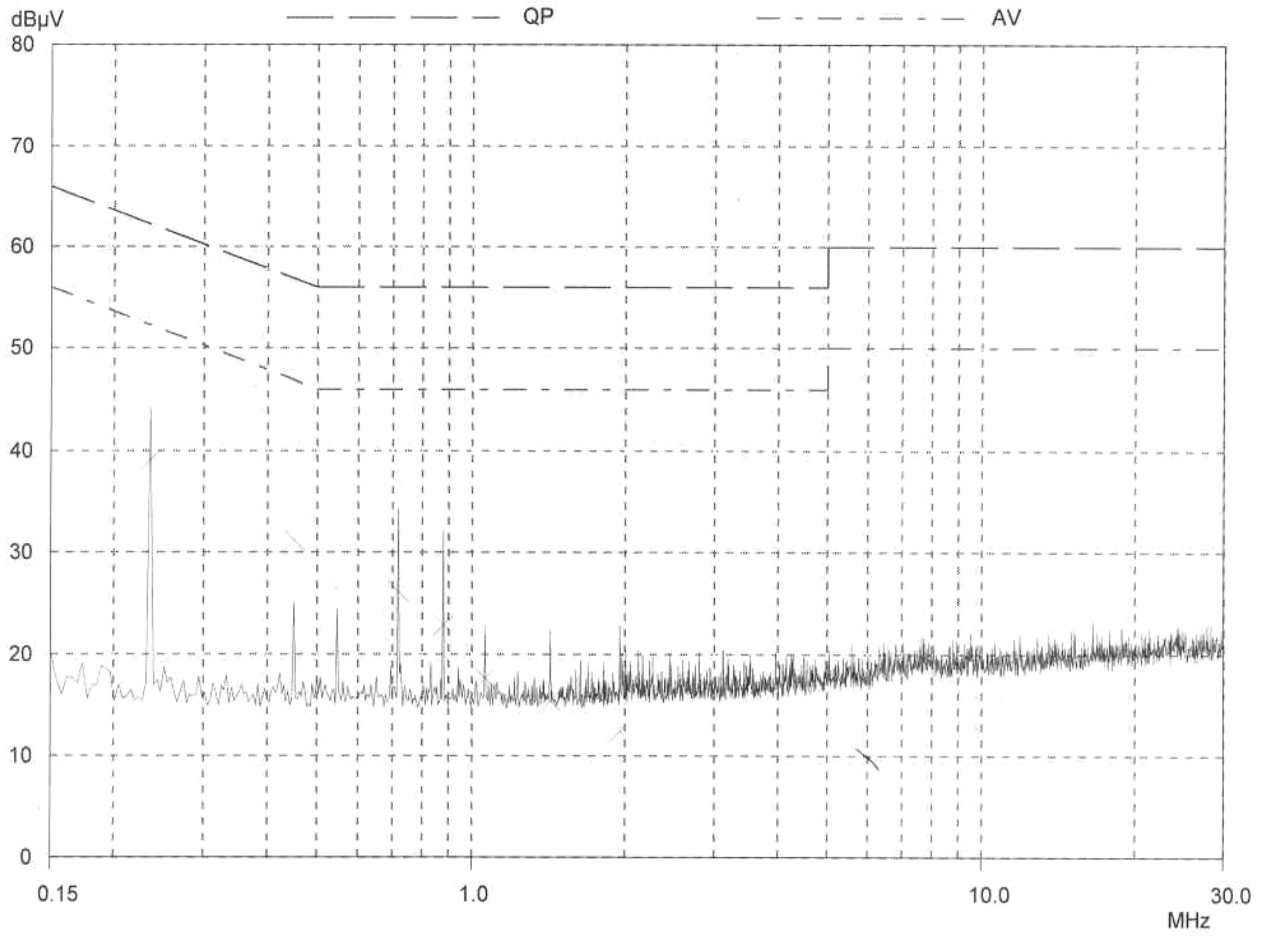

CONDUCTION EMISSION TEST

Peak Value

EUT:	2176T
Manuf:	
Op Cond:	CH4
Operator:	
Test Spec:	
Comment:	
	L1

Final Measurement:	Detector:	X QP
	Meas Time:	1sec
	Peaks:	8
	Acc Margin:	25 dB

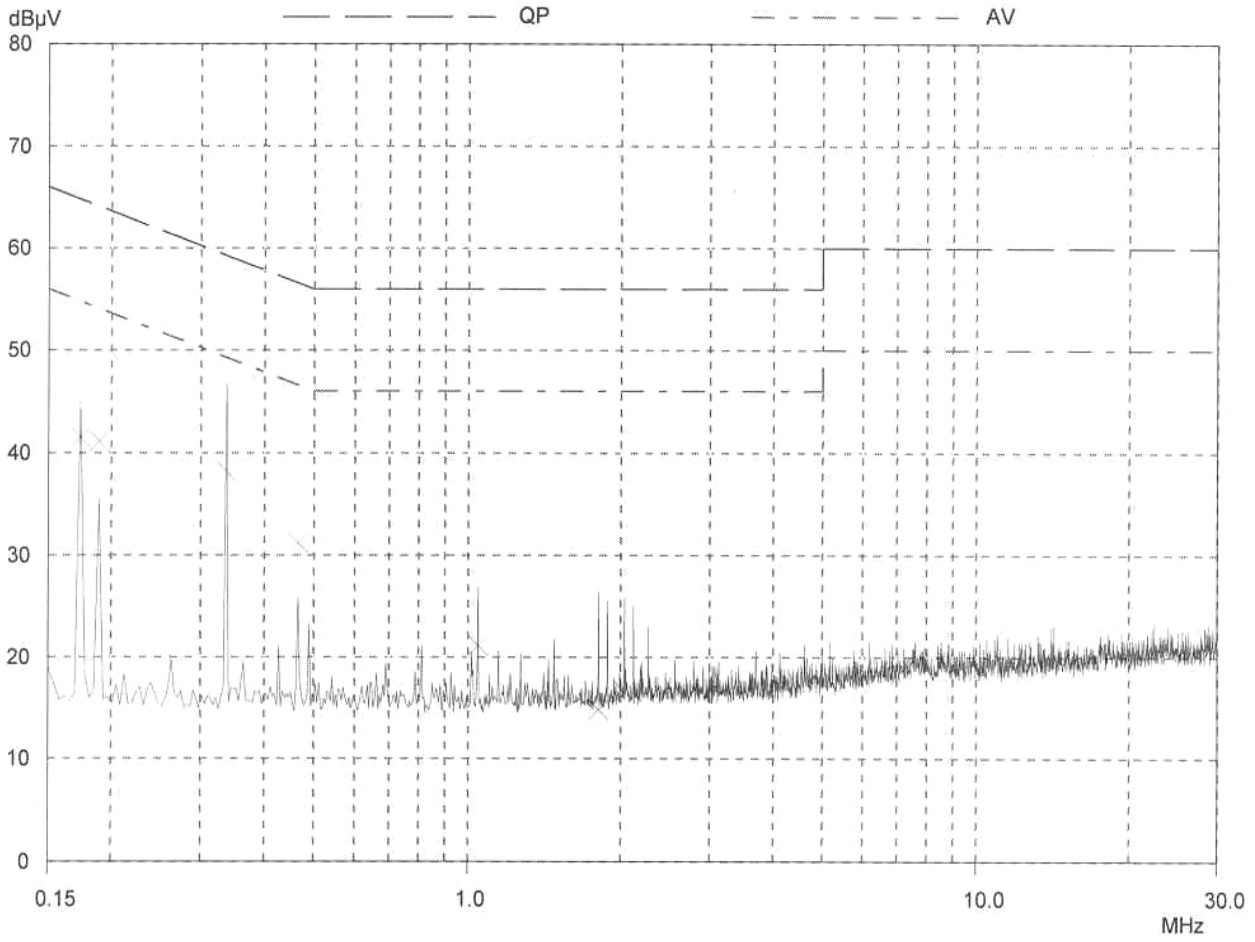

Appendix 2 : Plotted Data of Band Edges Emission

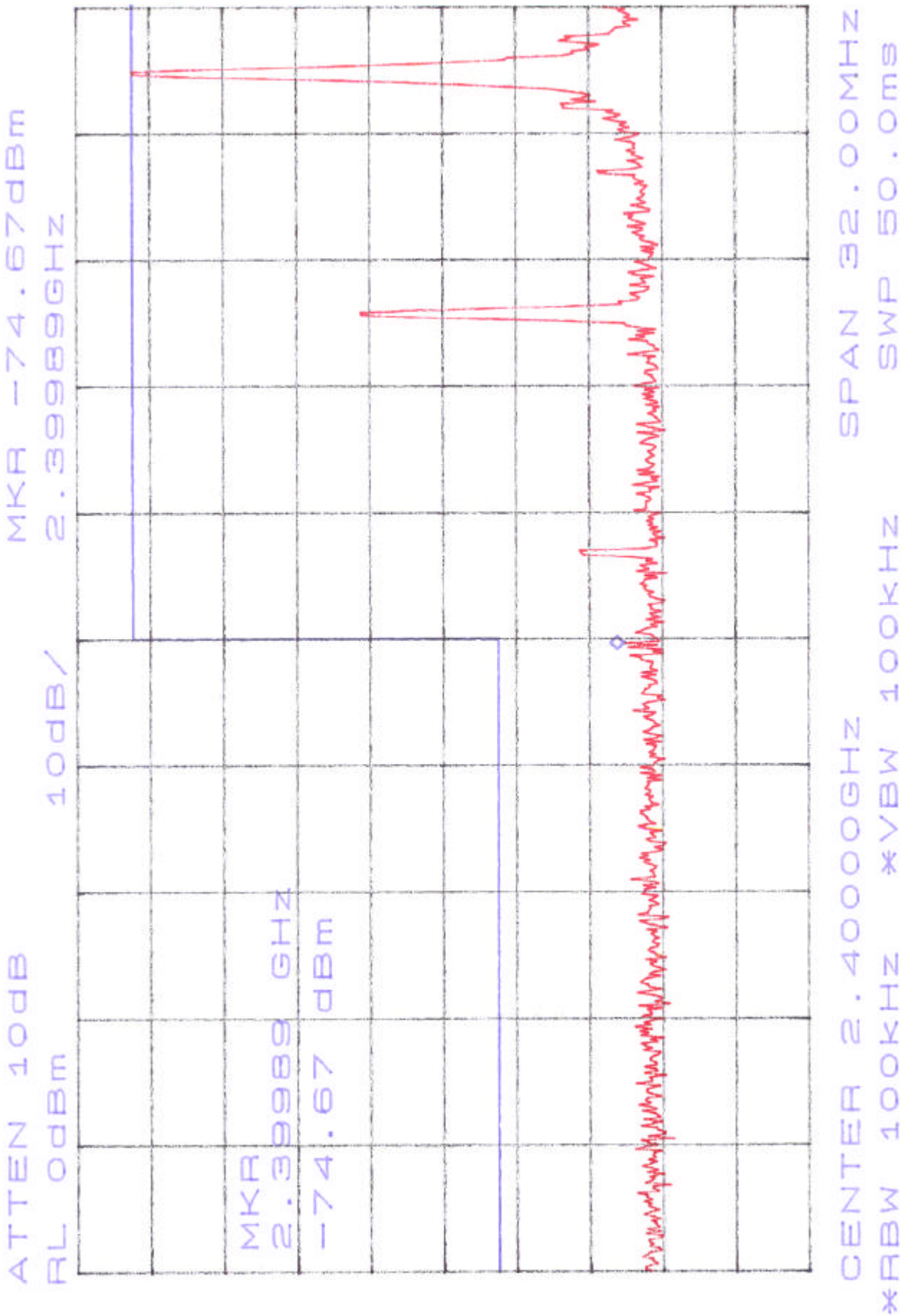
ATTEN 10dB
RL 0dBm
10dB/
MKR 2.39989 GHz
-74.67 dBm
MKR -74.67dBm
2.39989GHz
CENTER 2.4000GHz
*RBW 100KHz
*VBW 100KHz
SPAN 32.00MHz
SWP 50.0ms

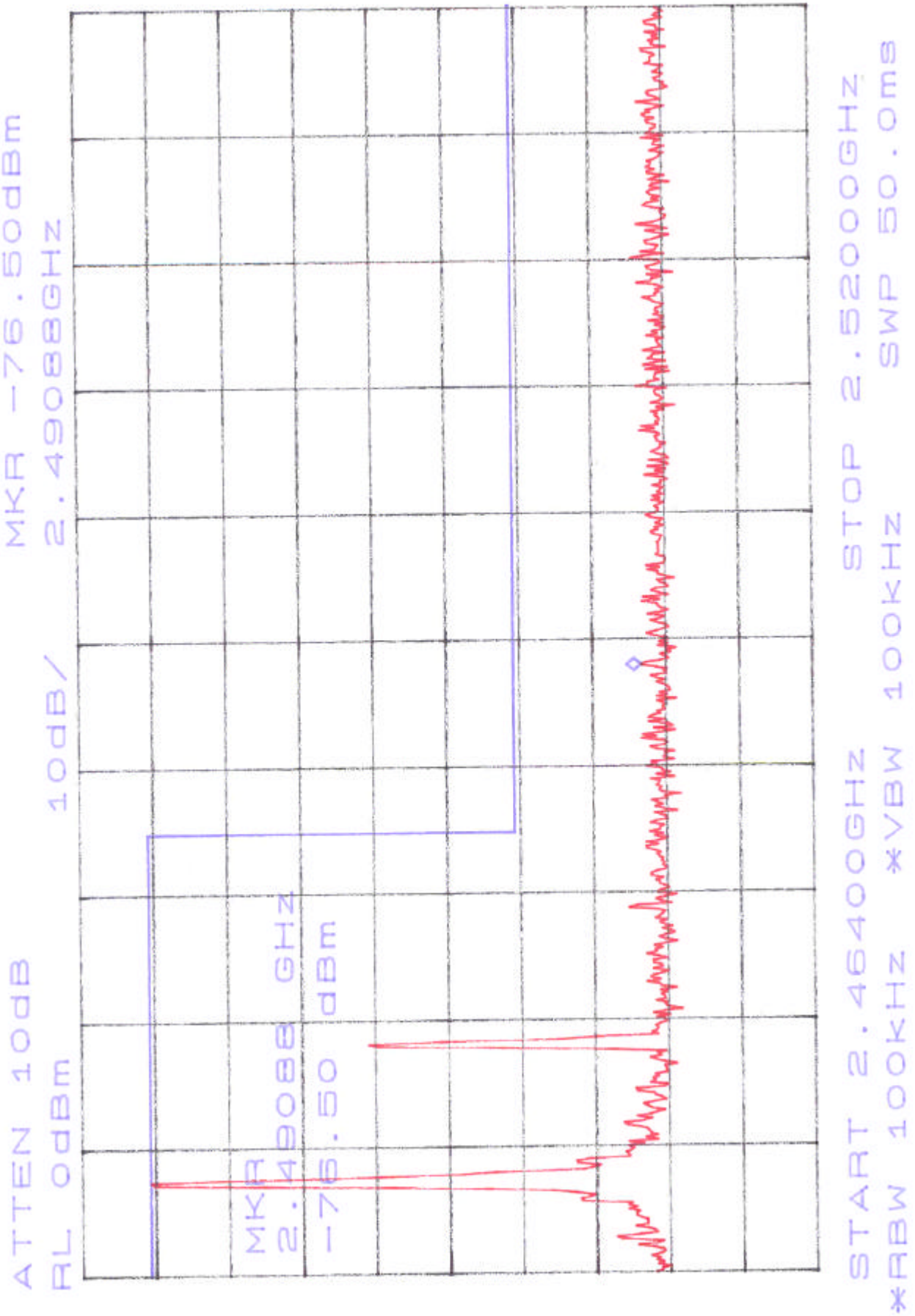
ATTEN 10dB
RL 0dBm
10dB/
MKR -76.50dBm
2.49088GHz
MKR
2.49088 GHz
-76.50 dBm
START 2.46400GHz
*RBW 100KHz
*VBW 100KHz
STOP 2.52000GHz
SWP 50.0ms