COMPANY CONFIDENTIAL:
THIS INFORMATION IS THE PROPERTY OF DATARADIO INC.
NO REPRODUCTION OR DISTRIBUTION WITHOUT PERMISSION.
Copyright © 2009, Dataradio Inc

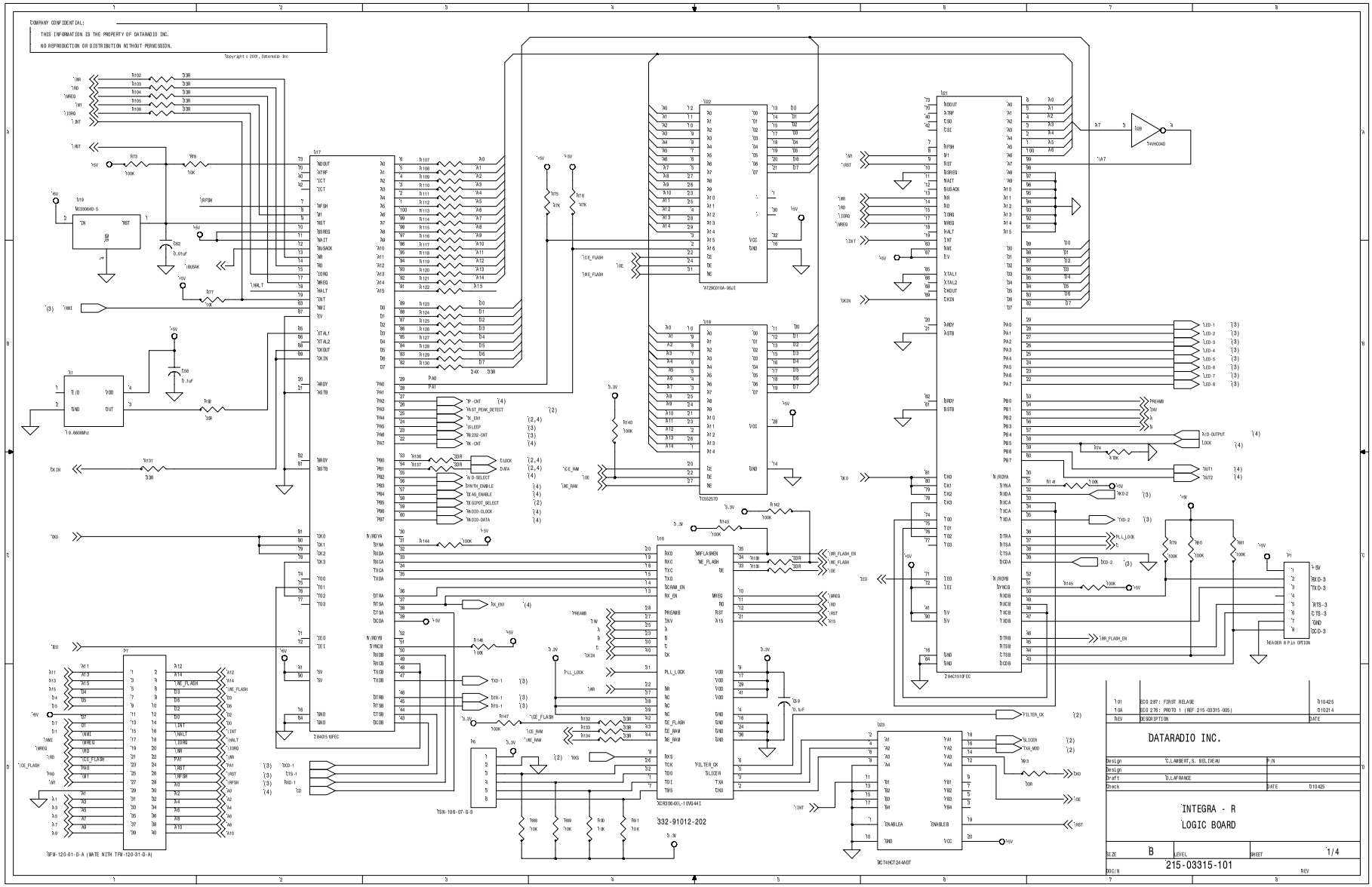

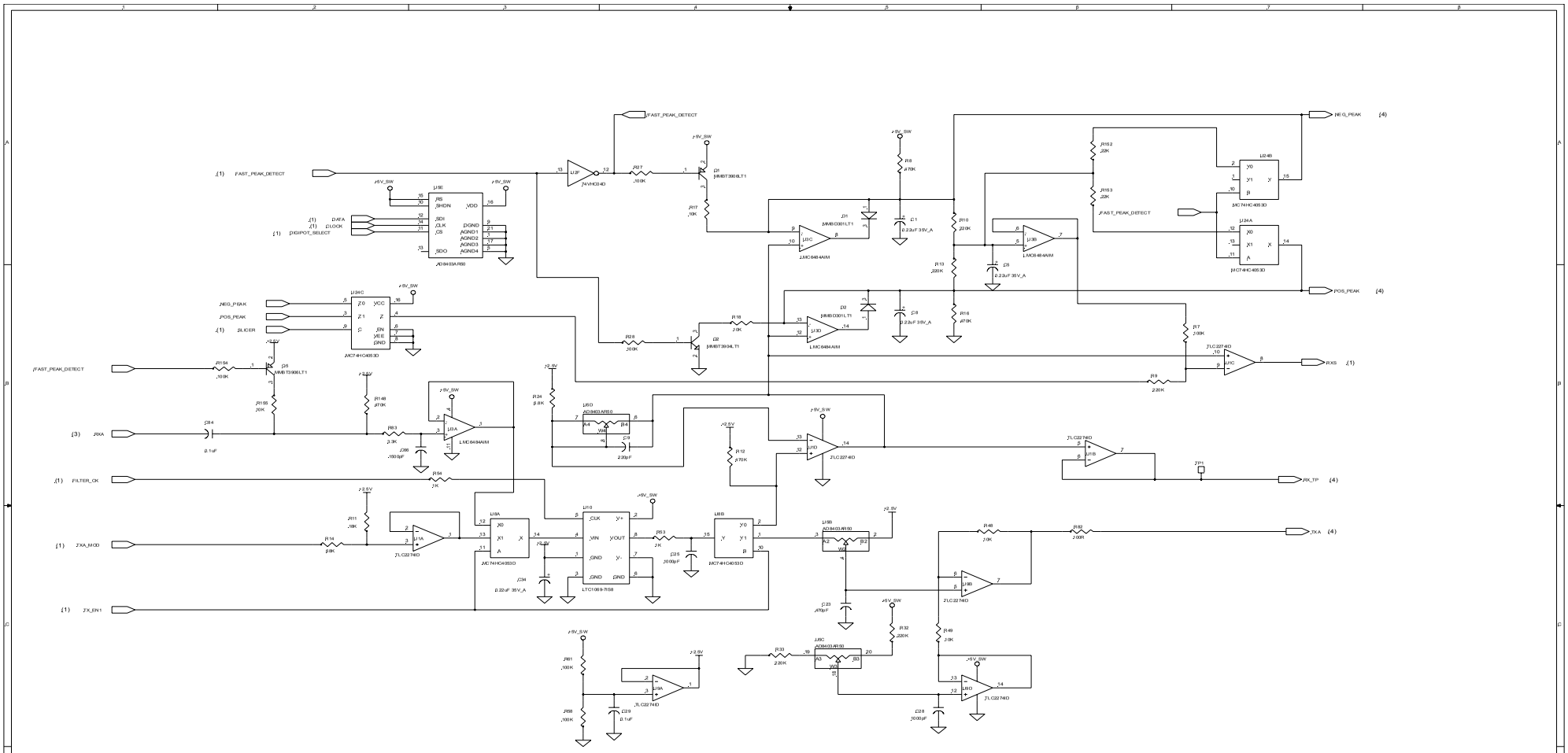

REV	DESCRIPTION	DATE
101	ECO 287: FIRST RELASE	010425
10A	ECO 276: PROTO 1 (REF 215-03315-005)	010214

DATARADIO INC.

Design	CLAMBERT S. BELIVEAU	P/N	
Design			
Draft	DLAFRANCE		
Check		DATE	010425

INTEGRA - R

SIZE	C	REVB	SHEET	2/4

DOC N 215-03315-101

COMPANY CONFIDENTIAL:
THIS INFORMATION IS THE PROPERTY OF DATARADIO INC.
NO REPRODUCTION OR DISTRIBUTION WITHOUT PERMISSION.
Copyright © 2001, Dataradio Inc.

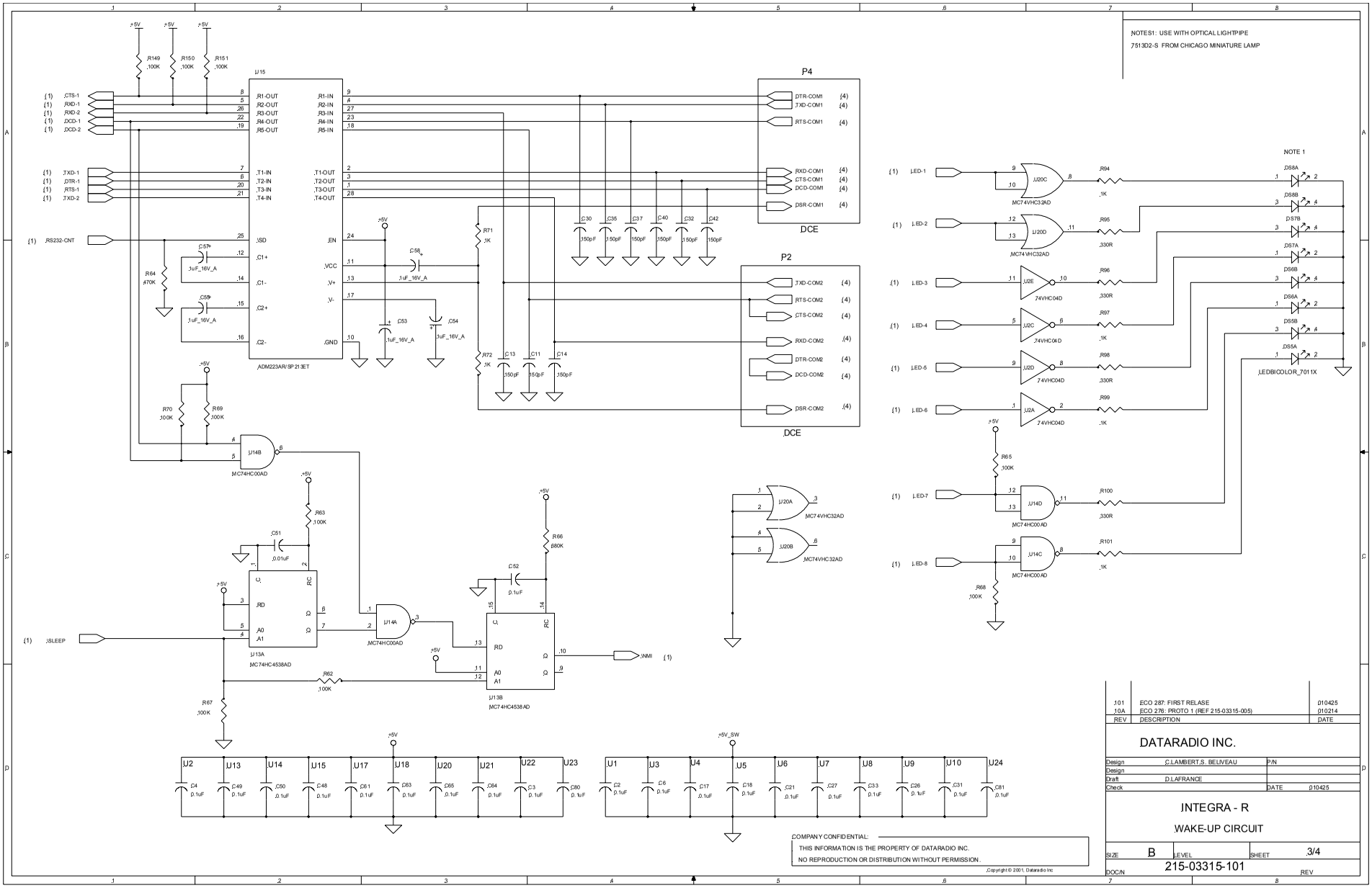
NOTES1: USE WITH OPTICAL LIGHTPIPE
7513D2-S FROM CHICAGO MINIATURE LAMP
NOTE 1
U15
ADM223AR/SP213ET
P4
DCE
P2
DCE
U14B
MC74HC00AD
U13A
MC74HC4538AD
U14A
MC74HC00AD
U13B
MC74HC4538AD
U20A
MC74VHC32AD
U20B
MC74VHC32AD
U20C
MC74VHC32AD
U20D
MC74VHC32AD
U2E
74VHC04D
U2C
74VHC04D
U2D
74VHC04D
U2A
74VHC04D
U14D
MC74HC00AD
U14C
MC74HC00AD
LEDBICOLOR_7011X
NMI
+5V_SW
COMPANY CONFIDENTIAL:
THIS INFORMATION IS THE PROPERTY OF DATARADIO INC.
NO REPRODUCTION OR DISTRIBUTION WITHOUT PERMISSION.
Copyright © 2001, Dataradio Inc
.101 ECO 287: FIRST RELASE 010425
.10A ECO 276: PROTO 1 (REF 215-03315-005) 010214
REV DESCRIPTION DATE
DATARADIO INC.
Design C.LAMBERT,S. BELIVEAU P/N
Design
Draft D.LAFRANCE
Check DATE 010425
INTEGRA - R
WAKE-UP CIRCUIT
SIZE B LEVEL SHEET 3/4
DOC/N 215-03315-101 REV

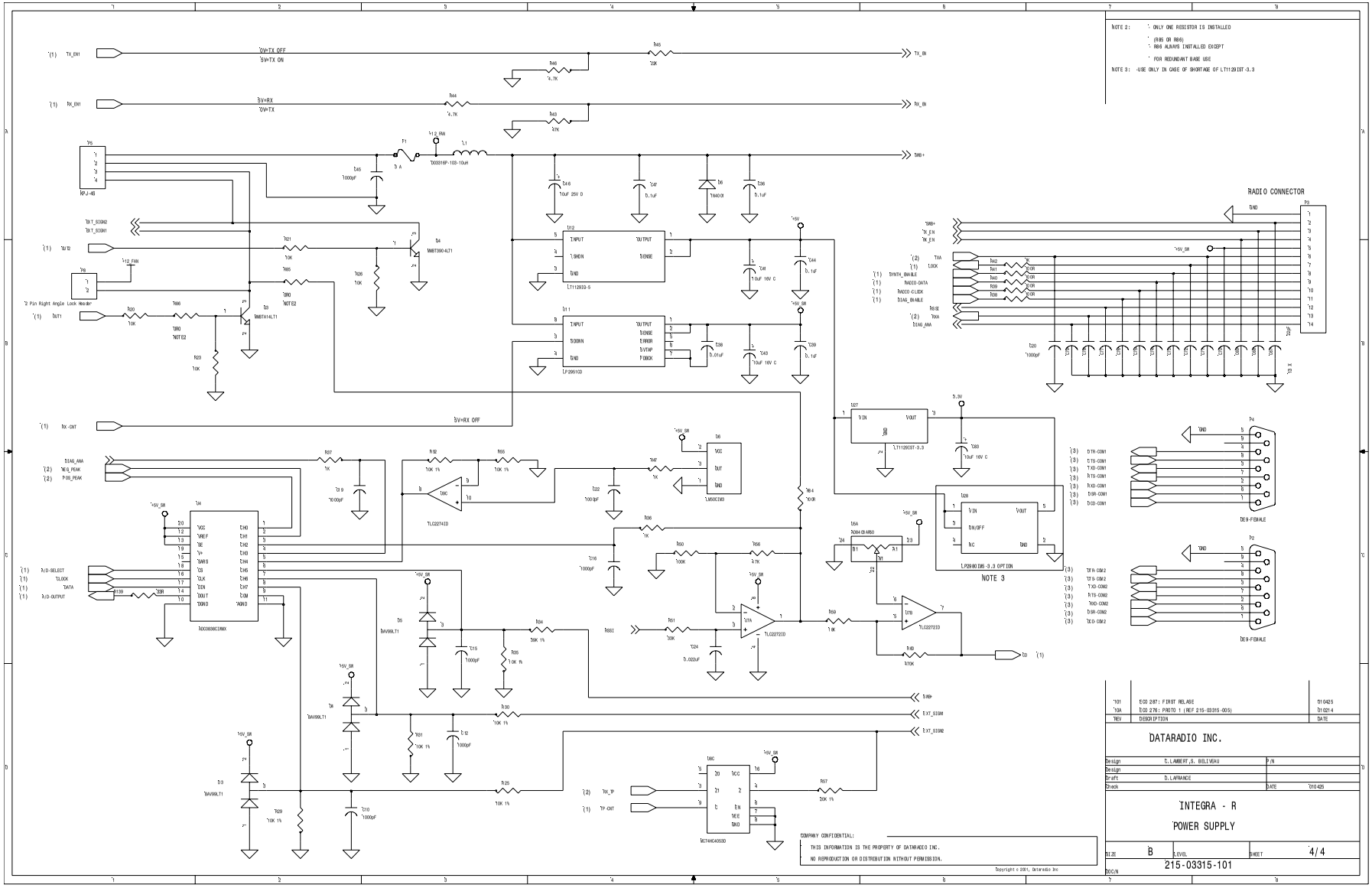
NOTE 2: : ONLY ONE RESISTOR IS INSTALLED
: (R85 OR R86)
: R86 ALWAYS INSTALLED EXCEPT
: FOR REDUNDANT BASE USE
NOTE 3: -USE ONLY IN CASE OF SHORTAGE OF LT1129IST-3.3
RADIO CONNECTOR
DB9-FEMALE
DB9-FEMALE
NOTE 3
COMPANY CONFIDENTIAL:
THIS INFORMATION IS THE PROPERTY OF DATARADIO INC.
NO REPRODUCTION OR DISTRIBUTION WITHOUT PERMISSION.
Copyright © 2001, Dataradio Inc
DATARADIO INC.
INTEGRA - R
POWER SUPPLY
215-03315-101

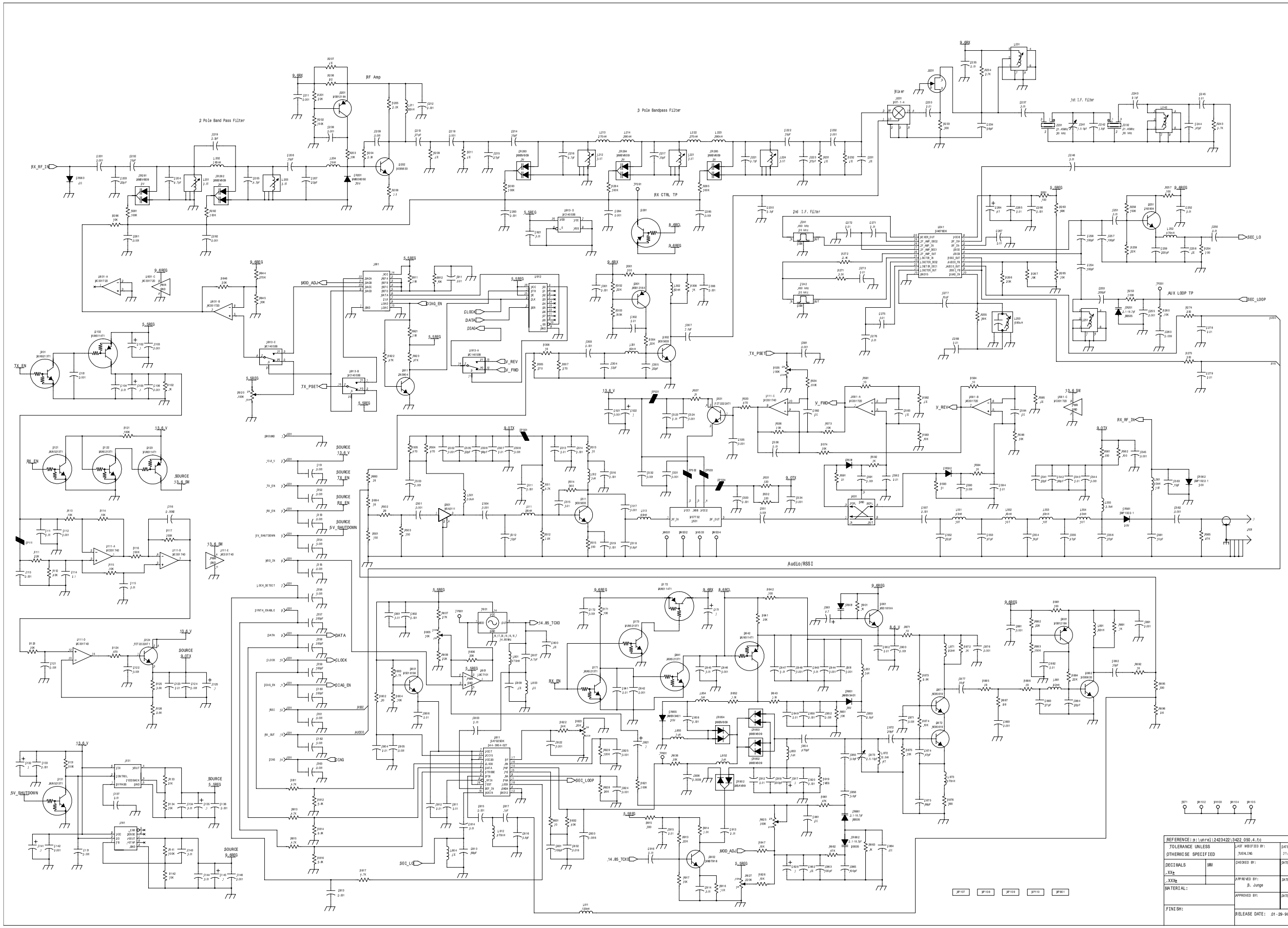

D-025-3422-050

REVISIONS

ECO	DRAWN BY	DATE				APPROVED BY
REV 2	00933	10-24-00	TU			REV 3

COMPANY CONFIDENTIAL

REFERENCE: m:\unrel\24234221\3422_050_4.tc

TOLERANCE UNLESS OTHERWISE SPECIFIED

.DECIMALS | MM
.XX± | .XXX± | MATERIAL: | FINISH:

LAST MODIFIED BY: JUENLING | DATE: 3/11/00
CHECKED BY: | DATE:
APPROVED BY: B. Junge | DATE: 01-29-98
APPROVED BY: | DATE:
RELEASE DATE: 01-29-98

DATARADIO® Dataradio Corp Ltd. 299 Johnson Avenue Waseca, MN 56093-0833

TITLE: DM3422 VHF Transceiver Schematic Diagram

CAD: INTEGRA 3.5 | DRAWING NO. D-025-3422-050

SCALE: | U/M: | SHEET 1 OF 1