SANYO

INSTRUCTION MANUAL

DWM-4500

DVD Home Theater System

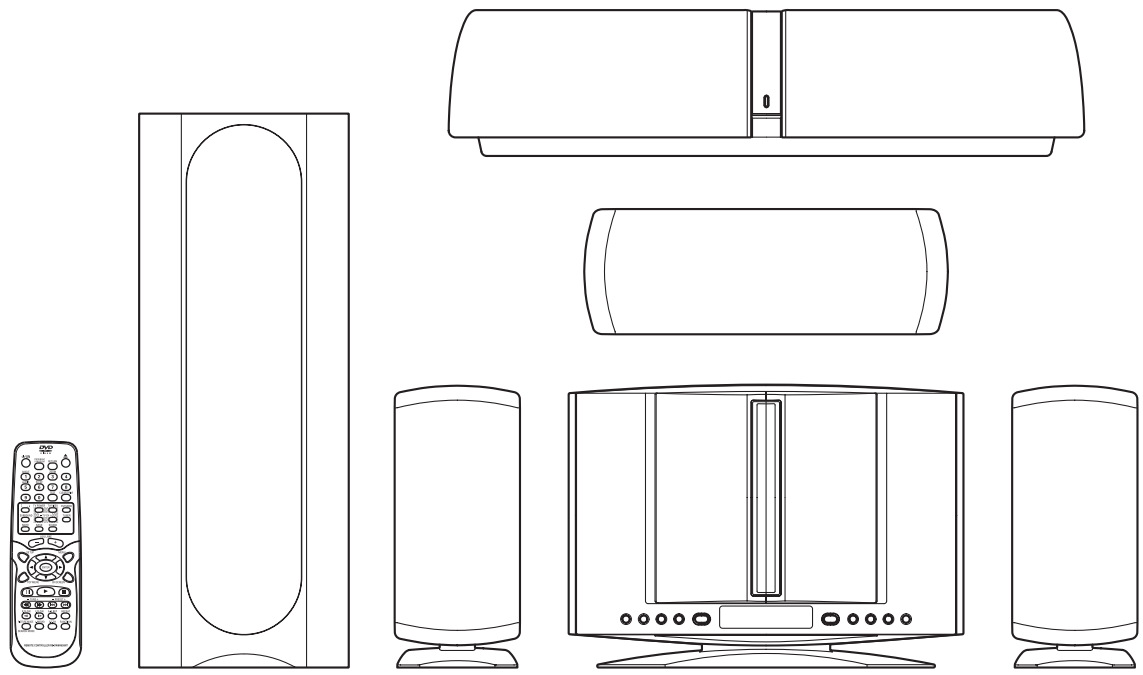

SANYO'S HELP-LINE
Call the toll-free number below if you have any difficulties operating this product.
1-800-813-3435 (Weekdays: 7:30 AM - 4:00 PM Central Time)

Please Read This Manual.
Because DVD is a new technology, we recommend that you read this manual carefully before connecting your DVD Home Theater System and operating it for the first time.
Keep the manual in a safe place for future reference.

1AD6P1P2104-- DWM-4500, Issue Number 1

English

CONTENTS

Accessories **E2**
Safety Certification **E3**
For Safe and Efficient Operation **E3**
Warning for Transmitter **E4**
Controls **E5**
Multi-Brand TV Remote Control **E6**
Basic Connections **E8**
System Cable Connection E8
Speaker Connections E10
Speaker Placement E11
Using the Rear Speaker in Wireless Mode E12
Using the Rear Speaker in Wired Mode E12
If Using the External Speaker (Not Supplied) Instead of the Rear Speaker... ..... E12
Conventional TV Connection E13
Using RF Modulator E14
Progressive-scan TV Connection E15
FM Antenna Connection E16
Additional Connection Examples E16
Power Supply E16
Before Operation **E17**
Common Operation E17
Selecting Surround Mode E18
Adjusting the Speaker Volume Balance E19
Adjusting the Sub-woofer Level E19
Playable Discs **E20**
Disc Playback **E21**
Preparations E21
Basic Playback E22
Selecting Picture Mode E22
Stopping Playback E23
Continuing Playback from Where You Stopped Watching (LAST MEMO PLAY), for DVD only E23
Selecting a DVD Menu E23
Selecting a Top Menu [DVD] E23
Chapter (Track) Skip E23
Title Search [DVD] E24
Chapter Search [DVD] E24
Time Search [DVD] E24
Time Search [CD] E24
Track Search [CD] E24
Fast Playback E25
Slow Motion Playback [DVD] E25
Still Picture (Pause) E25
Frame by Frame Advance Playback [DVD] E25
Picture Zoom [DVD] E25
Viewing from a Desired Camera Angle (Multi-Angle) [DVD] E26
Designated Range Repeat Playback (A-B Repeat) E26
Repeat Playback E26
Random Playback [CD] E27
Programmed Playback [CD] E27
Selecting Subtitle Language [DVD] E28
Selecting Audio Soundtrack Language (Multi-Language) [DVD] E28
Selecting On-Screen Information E28
TVGuardian Operation **E29**
Before Setting E29
Setting TVGuardian E29
How It Works After Setting TVGuardian E30
MP3/WMA CD Operation **E31**
Before Starting E31
MP3 CD Playback E31
Picture Disc Operation **E32**
Before Starting E32
Kodak Picture/JPEG CD Playback E32
Initial Settings **E33**
Setting Language E33
Setting Display E34
Setting Audio E36
Setting Parental E37
Language Code List E38
Listening to the Radio (FM Only) **E39**
Preparation E39
Automatic/Manual Tuning E39
To Preset Stations E39
Listening to Preset Stations E39
Enjoying Other Sources **E40**
Sleep Timer Operation **E40**
Maintenance **E40**
Troubleshooting Guide **E40**
Specifications **E42**
Warranty **E43**

IMPORTANT INFORMATION:
To connect this DVD Home Theater System to a TV, TV must have a Video input jack (RCA-type) at least. You cannot connect it to an antenna terminal of TV.

To operate the built-in TVGuardian®
This unit has the built-in TVGuardian® Foul Language Filter (TVG®).
When a disc supporting closed caption is played, it will mute the audio during the entire phrase containing offensive language. For more details, see page E29.

CAUTION

RISK OF ELECTRIC SHOCK
DO NOT OPEN

CAUTION: TO PREVENT THE RISK OF ELECTRIC SHOCK, DO NOT REMOVE COVER (OR BACK). NO USER-SERVICEABLE PARTS INSIDE. REFER SERVICING TO QUALIFIED SERVICE PERSONNEL.

WARNING: TO PREVENT FIRE OR SHOCK HAZARD, DO NOT EXPOSE THIS APPLIANCE TO RAIN OR MOISTURE.

This symbol indicates that dangerous voltage constituting a risk of electric shock is present within this unit.

This symbol indicates that there are important operating and maintenance instructions in the literature accompanying this unit.

WARNING: UNAUTHORIZED RECORDING OF COPYRIGHTED MATERIAL MAY VIOLATE APPLICABLE COPYRIGHT LAWS. THE MANUFACTURER ASSUMES NO RESPONSIBILITY FOR UNAUTHORIZED DUPLICATION, USE OR OTHER ACTS WHICH INFRINGE UPON THE RIGHTS OF COPYRIGHT OWNERS.

ACCESSORIES

RB-DWM4500MT wireless remote control

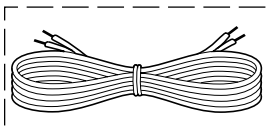

Front left speaker cable
Length: Approx. 16.4 feet (5 meters)
(Black and White)

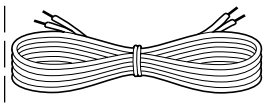

Front right speaker cable
Length: Approx. 16.4 feet (5 meters)
(Black and Red)

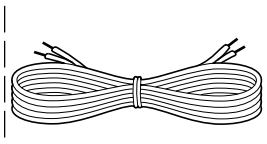

Front center speaker cable
Length: Approx. 16.4 feet (5 meters)
(Black and Green)

The speaker cables are packed in the speaker package.

FM indoor antenna lead wire

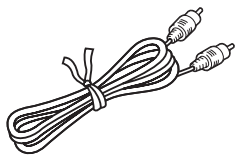

Video cable

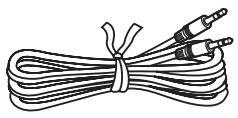

Assistance speaker cable for rear speaker
Length: Approx. 23 feet (7 meters)

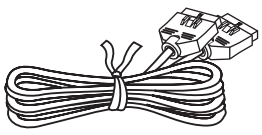

System cable

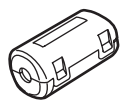

Ferrite core x 2

Either the main unit or remote control can be operated. However, for convenience, this instruction manual explains operation using the remote control.
Note:
This handling description is printed prior to product development.
When a part of the product specification must be changed to improve operability or other functions, priority is given to the product specification itself. In such instances, the instruction manual may not entirely match all the functions of the actual product.
Therefore, the actual product and packaging, as well as the name and illustration, may differ from the manual.

SAFETY CERTIFICATION

This unit is made and tested to meet exacting safety standards. It meets UL and FCC requirements and complies with safety performance standards of the U.S. Department of Health and Human Services.

CAUTION - USE OF CONTROLS OR ADJUSTMENTS OR PERFORMANCE OF PROCEDURES OTHER THAN THOSE SPECIFIED HEREIN MAY RESULT IN HAZARDOUS RADIATION EXPOSURE.

THIS UNIT SHOULD NOT BE ADJUSTED OR REPAIRED BY ANYONE EXCEPT PROPERLY QUALIFIED SERVICE PERSONNEL.

FCC INFORMATION
This device complies with Part 15 of the FCC Rules.
Operation is subject to the following two conditions:
(1) This device may not cause harmful interference, and (2) this device must accept any interference received, including interference that may cause undesired operation.

CAUTION:
Changes or modifications not expressly approved by the party responsible for compliance could void the user's authority to operate this equipment.

Note:
This equipment has been tested and found to comply with the limits for a Class B digital device, pursuant to Part 15 of the FCC Rules. These limits are designed to provide reasonable protection against harmful interference in a residential installation. This equipment generates, uses and can radiate radio frequency energy and, if not installed and used in accordance with the instructions, may cause harmful interference to radio communications. However, there is no guarantee that interference will not occur in a particular installation. If this equipment does cause harmful interference to radio or television reception, which can be determined by turning the equipment off and on, the user is encouraged to try to correct the interference by one or more of the following measures:

- Reorient or relocate the receiving antenna.
- Increase the separation between the equipment and receiver.
- Connect the equipment into an outlet on a circuit different from that to which the receiver is connected.
- Consult the dealer or an experienced radio/TV technician for help.

FOR SAFE AND EFFICIENT OPERATION

- Do not damage the power cord.
- When not in use, disconnect the power cord from the outlet. Grasp the plug, not the cord, when disconnecting the unit.
- If water should enter the unit, electrical shock or a malfunction may result. Use in an area where there is low humidity and little dust.
- Do not disassemble or alter the unit in any way.
- Do not use the unit in areas where extremes in temperature occur (below 40°F (5°C) or exceeding 95°F (35°C)), or where it may be exposed to direct sunlight.
- Because of the DVD video player's extremely low noise and wide dynamic range, there is a tendency to set the volume on the amplifier higher than necessary. Doing so may produce an excessively high output from the amplifier which can cause damage to your speakers. Please be careful in this regard.
- Sudden changes in the surrounding temperature can cause dew to form on the optical pickup lens inside the unit. Under this condition the unit may be unable to operate properly. If this should occur, remove the disc and allow the unit to adjust to the surrounding temperature.
- **When carrying the unit, be sure to remove a disc which may be inside and turn the power off. Then unplug the power cord from the AC outlet after 10 seconds. Carrying the unit with a disc inside may damage the disc and/or the unit.**
- **The unit is automatically set to the Screen Saver mode after approximately 5 minutes have elapsed under the stop or pause mode.**

CAUTION:
The sub-woofer (powered speaker) and the rear speaker (powered speaker) must be placed in a well ventilated area.
Do not place any object on the top of these units.
Do not block ventilation holes.
The cabinet of these units warms up when it is used for a long time, but it is not a malfunction.

WARNING FOR TRANSMITTER

Important Information!

1. Explicitly specify to all users the technical instructions and the scope of use defined in the related documents and provide the explanation about all the control methods, adjusting procedures and usage of switches.
2. Do not change the emitter frequency nor boost the emitter power (including the power of excess load wireless frequency power amplifier). Do not put up an external antenna nor use any other remodeled antenna.
3. In use of this unit, avoid any act which interferes with legal wireless communication services. Should any interference arise, immediately stop using this unit, remove the interference, and avoid such an act in the future.
4. When micro-power wireless equipment is used, avoid interference with wireless communication services or emissive interference from industrial, scientific and medical treatment equipment.
5. Do not use this unit in an aircraft or near an airport.

Warning for using the sub-woofer with a built-in transmitter

- **Keep the sub-woofer (powered speaker) at least 8 feet away from all heart pacemakers!**

  The radio waves may disrupt the operation of the pacemaker.

- **Do not operate this unit in medical Institutions, hospitals or near medical equipment!**

  The radio waves may cause nearby equipment to operate incorrectly or fail.

  Forbidden

- **When other equipment or a medical apparatus operates incorrectly or fails to operate due to radio wave interference, stop using this unit!**

  The radio waves may cause nearby equipment to operate incorrectly or fail.

  Forbidden

In-plant radio stations, and special low-power radio stations for movable body identification used for production lines and amateur radio stations as well as industrial, scientific and medical equipment (such as microwave ovens) use the same frequency band used by this unit.

1. Before using this unit, make sure that no in-plant radio stations or special low-power radio stations for movable body identification or amateur radio stations are operated nearby.
2. If this unit should adversely radio-interfere with an in-plant radio station for movable body identification, immediately change the frequency band used by this unit or stop emitting electric waves and consult the your dealer or SANYO service center about measures for avoiding interference (for example, installation of a partition).
3. If any trouble occurs such as this unit causing adverse radio interference with special low-power radio stations for movable body identification or an amateur radio station, contact your SANYO dealer or SANYO service center.

Need help? Call
1-800-813-3435

CONTROLS

Main unit (DVD Receiver)

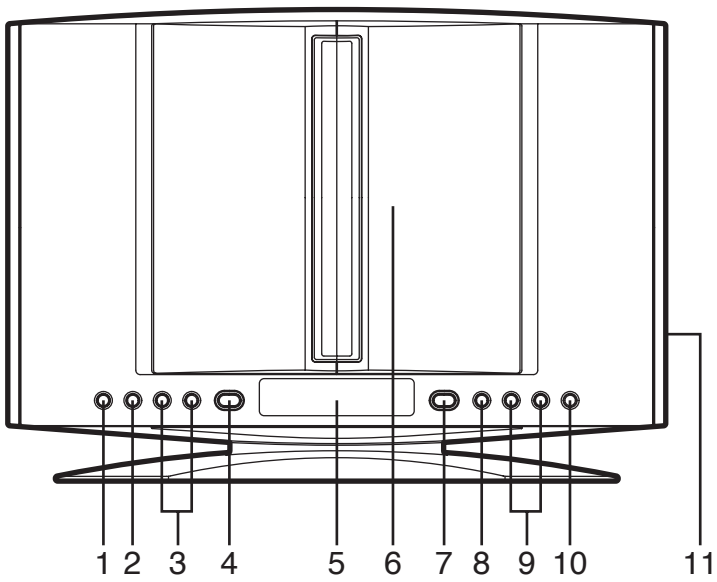

1. Remote sensor (IR)
2. Function button (FUNCTION)
3. Volume buttons (- VOL +)
4. Power button (⏻/ON)
5. Display
6. Disc door
7. Play button (▶)
8. Stop button (■)
9. Skip/Next/Previous/Preset tuning buttons (|◀◀/▶▶|, -PRESET +)
10. Open/Close button (⏏)
11. S-video and Component video out select switch (VIDEO OUT SELECT, right side) (See pages E13 and E15.)

Sub-woofer (Powered speaker)

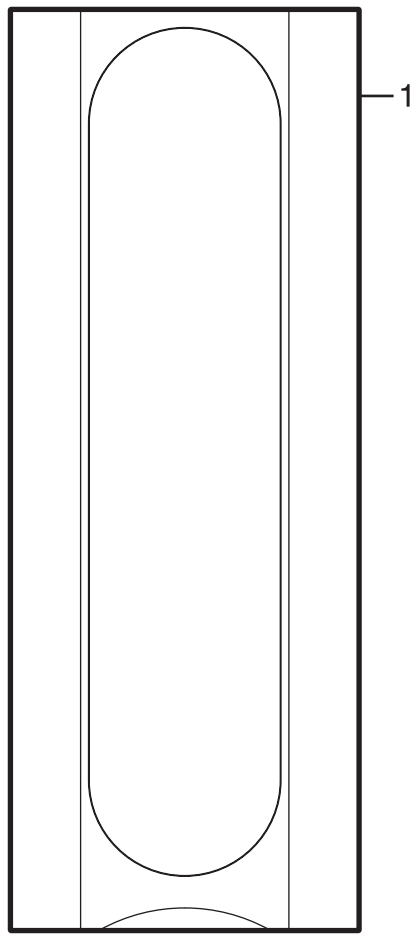

1. Frequency switch (FREQUENCY, back side) (See page E12.)

Rear speaker (Powered speaker)

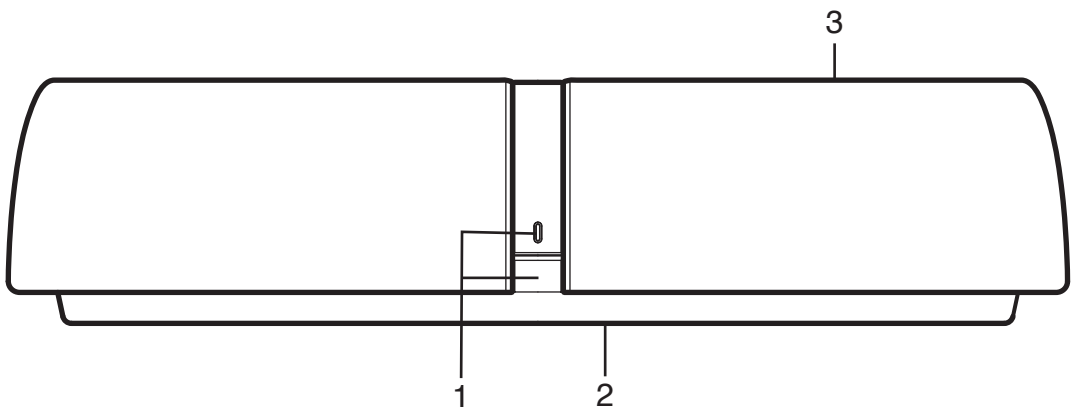

1. Power switch (⏻/ON) and power indicator
2. Speaker switch (SPEAKER, back side) (See page E12.)
3. Frequency switch (FREQUENCY, top side) (See page E12.)

MULTI-BRAND TV REMOTE CONTROL

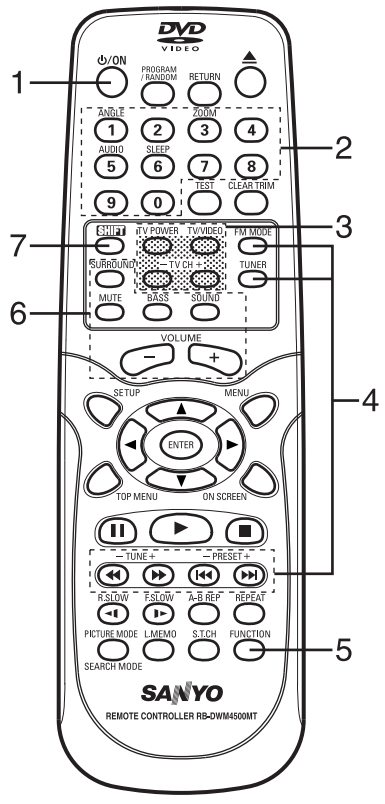

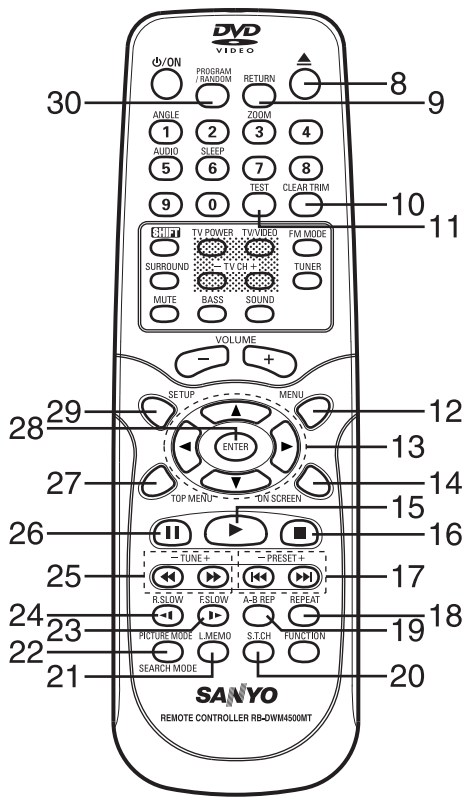

1. Power button (⏻/ON)
2. Number and other function buttons
   These buttons are used as number buttons and as function buttons of each name.
   - When using as a number button, press the appropriate button directly.
   - When using as a function button of each name, press the appropriate button while holding the SHIFT button down.

   Number buttons (1 – 9, 0)
   Angle button (ANGLE)
   Zoom button (ZOOM)
   Audio button (AUDIO)
   Sleep button (SLEEP)
3. TV control buttons
   Power button (TV POWER)
   TV/VIDEO select button (TV/VIDEO)
   Channel scanning buttons (-TV CH +)
4. Tuner controls
   FM mode button (FM MODE)
   Tuner function button (TUNER)
   Tuning buttons (- TUNE +)
   Preset tuning buttons (- PRESET +)
5. Function button (FUNCTION)
6. Amplifier controls
   Surround button (SURROUND)
   Muting button (MUTE)
   Bass button (BASS)
   Sound preset button (SOUND)
   Volume buttons (- VOLUME +)
7. Shift button (SHIFT)
8. Open/Close button (⏏)
9. Return button (RETURN) (See page E23.)
10. Clear/Trim button (CLEAR, TRIM)
    Note:
    At Trimming mode, press the button while holding the SHIFT button down. (See page E19.)
11. Test tone button (TEST) (See page E19.)
12. Menu button (MENU)
13. Directional arrow buttons (▲, ►, ▼, ◄)
14. On-screen display button (ON SCREEN)
15. Play button (►)
16. Stop button (■)
17. Skip/Next/Previous buttons (|◄◄, ►►|)
18. Repeat button (REPEAT)
19. A-B repeat button (A-B REP)
20. Subtitle change button (S.T.CH)
21. Last memory button (L.MEMO)
22. Picture mode/Search mode button
    (PICTURE MODE/SEARCH MODE)
    Note:
    At Search mode, press the button while holding the SHIFT button down.
23. Forward slow button (F.SLOW I ►)
24. Reverse slow button (R.SLOW ◄ I)
25. Fast forward/Fast reverse buttons (◄◄, ►►)
26. Pause/Step button (II)
27. Top menu button (TOP MENU)
28. Enter button (ENTER)
29. Setup button (SETUP)
30. Program/Random play button (PROGRAM/RANDOM)

Inserting batteries

1 2

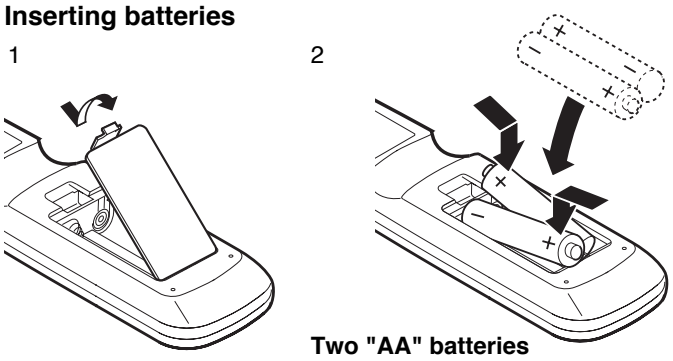

Two "AA" batteries
(not supplied)

Note:
Remove the batteries if the remote control is not to be used for a month or more. Batteries left in the unit may leak and cause damage.

IMPORTANT NOTE:

SPENT OR DISCHARGED BATTERIES MUST BE RECYCLED OR DISPOSED OF PROPERLY IN COMPLIANCE WITH ALL APPLICABLE LAWS.
FOR DETAILED INFORMATION, CONTACT YOUR LOCAL COUNTY SOLID WASTE AUTHORITY.

Remote control range

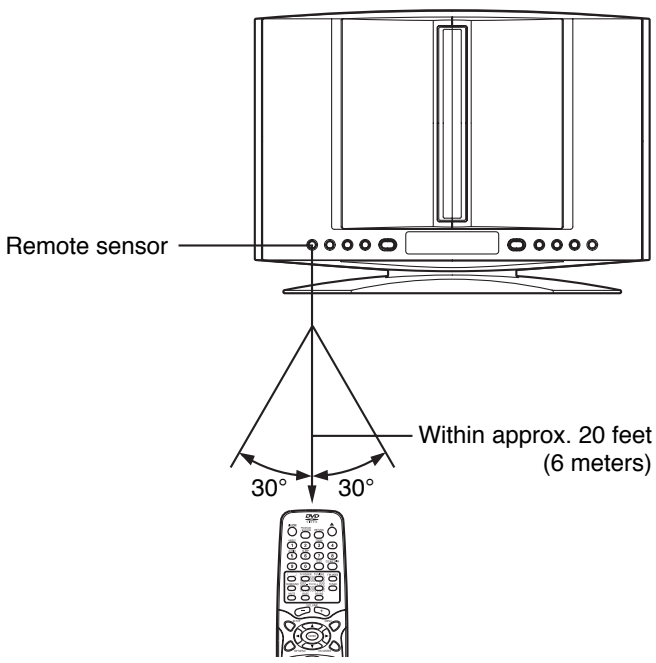

To set the remote control code for TV

This remote control can operate the basic functions of TVs made by the manufacturers listed below.
To enter the remote control code for your brand of TV, follow the steps below.

1. In the chart below, find the code corresponding to your brand of TV.
2. While holding down [TV POWER], enter the 2-digit code using the number buttons [**0** - **9**], then release [TV POWER].
   - The remote control is now set to operate your TV.

TV brands	Code
ADMIRAL	05, 10, 13
EMERSON	17
FISHER	03
GE	07
GOLD STAR	01
HITACHI	02
JVC	15
MAGNAVOX	08
MATSUSHITA	12, 18
MITSUBISHI	14
PANASONIC	12, 18
QUASAR	12, 18
RCA	06
SAMSUNG	16
SANYO	03
SHARP	00, 13
SONY	11
TECHNOL ACE	05
TOSHIBA	04
ZENITH	09, 10

Notes:
- Only remote-controlled TVs can be operated using this remote control. (Refer to your TV instruction manual for more details.)
- There may be some TV models that cannot be operated with this remote control. If this is the case, use the original remote control supplied with the TV.

IMPORTANT NOTE:
If the batteries in the remote control are changed, the code settings for the TV must be re-entered.

Write your code number below for future reference.

TV: _____

Note:
This remote control cannot operate your VCR.

Need help? Call
1-800-813-3435

BASIC CONNECTIONS

Do not connect the power cord to a 120V AC 60Hz outlet until all connections have been made.

System Cable Connection

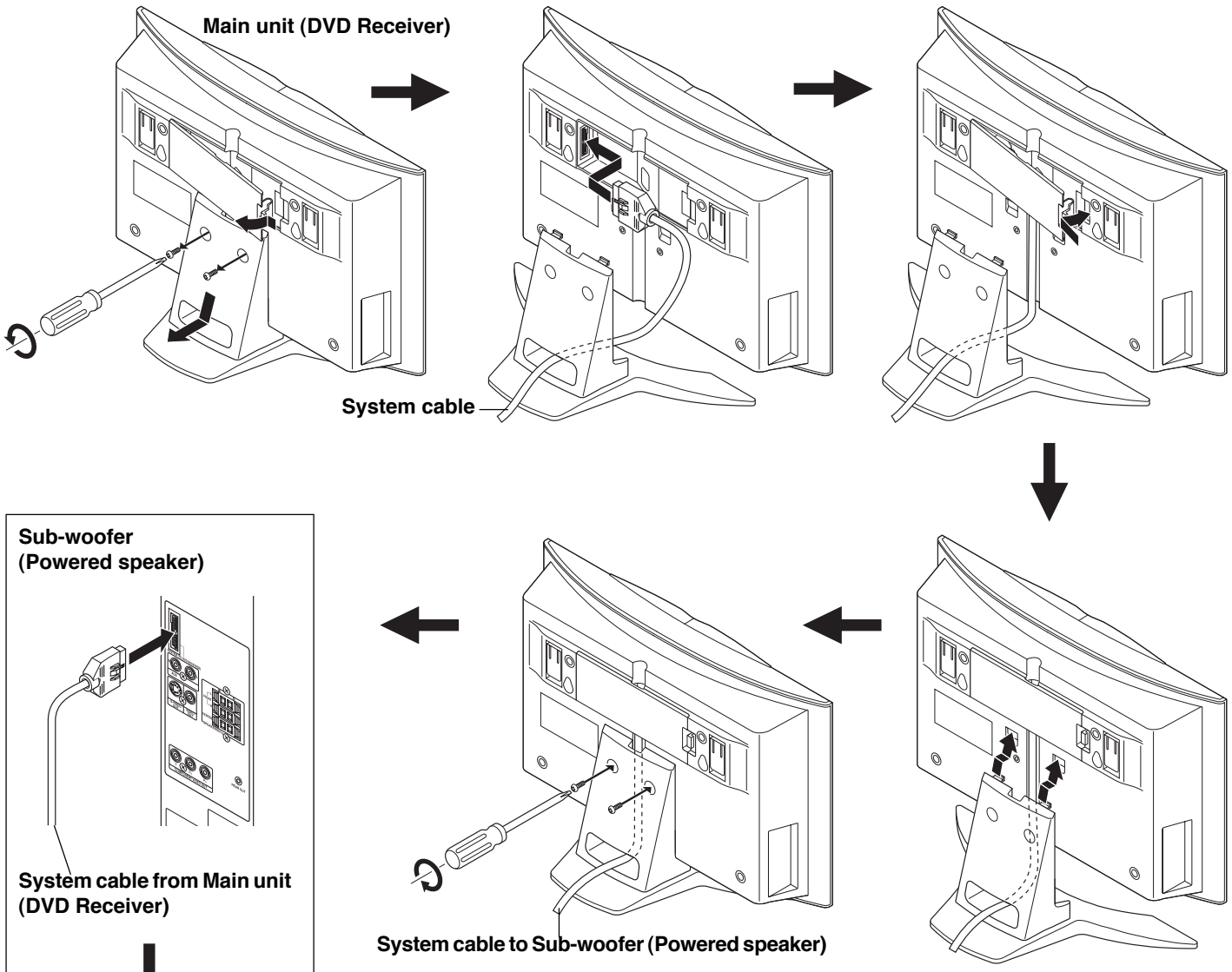

Sub-woofer (Powered speaker)

System cable from Main unit (DVD Receiver)

Attach the ferrite core.

Ferrite core

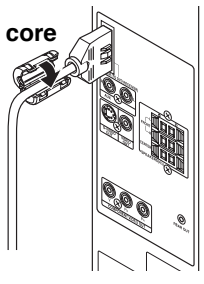

Need help? Call
1-800-813-3435

Example: To use Main unit horizontally

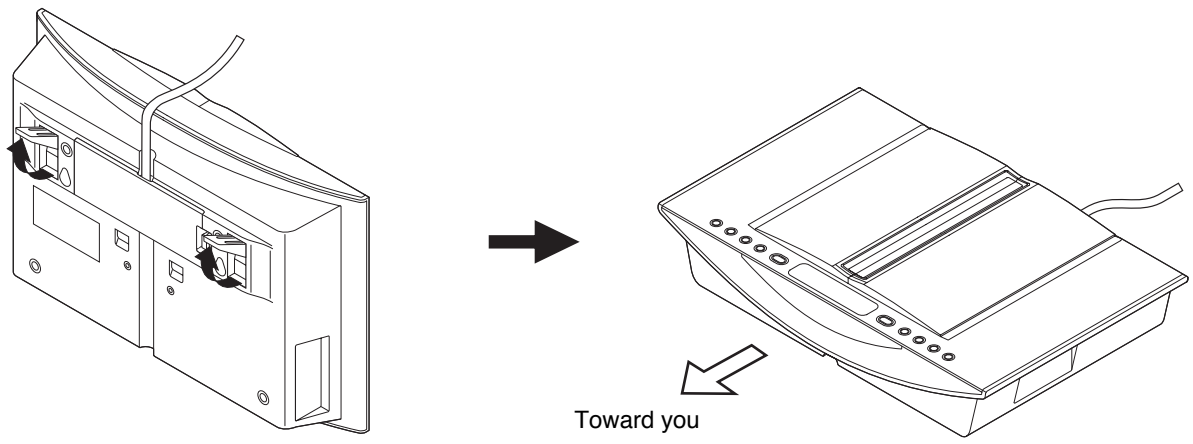

Example: To hang Main unit on a wall

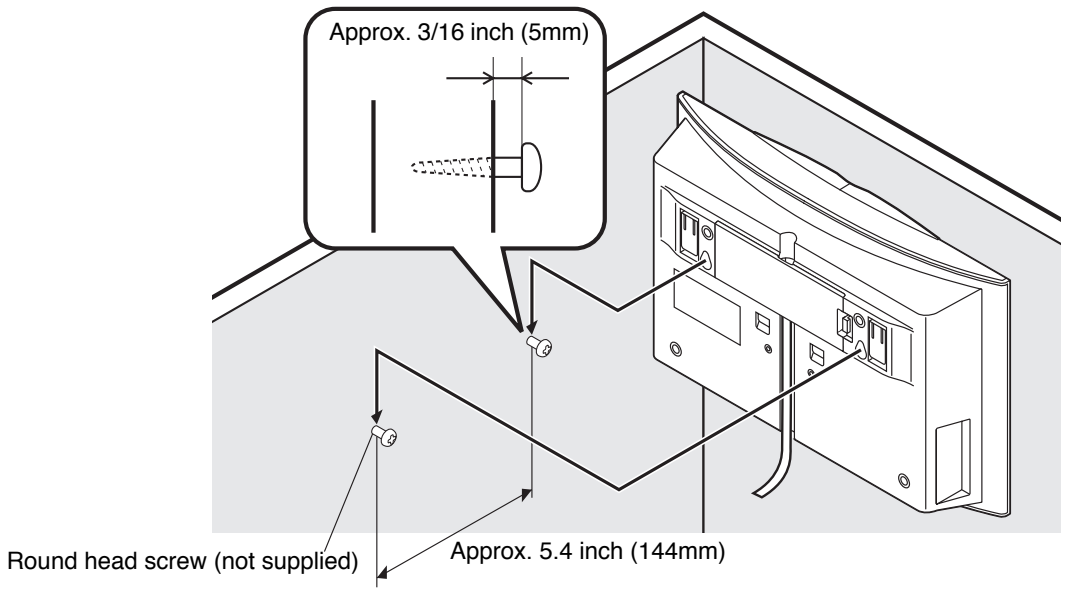

Note:
Take care when installing it. It may cause damage or serious injury should it fall from its mountings.

To unplug the system cable, pull out the plug (2) while pressing (1) down.

Sub-woofer (Powered speaker)

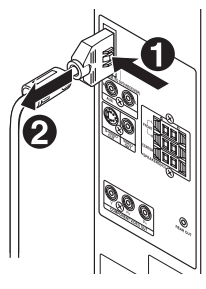

Main unit

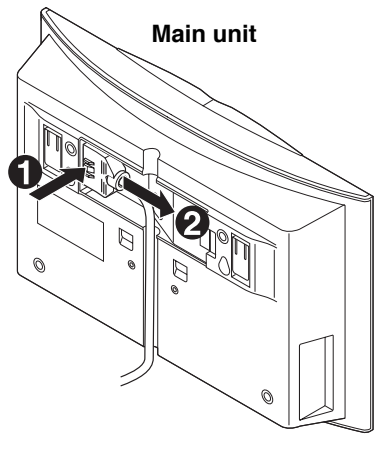

Note:
Do not connect the power cord to a 120V AC 60Hz outlet until all connections have been made.

Speaker Connections

To achieve proper stereo reproduction, connect the speaker wires without shorting to adjacent wires as shown below.

Speaker Wire Color	Use
Black and White	Front left speaker
Black and Red	Front right speaker
Black and Green	Center speaker

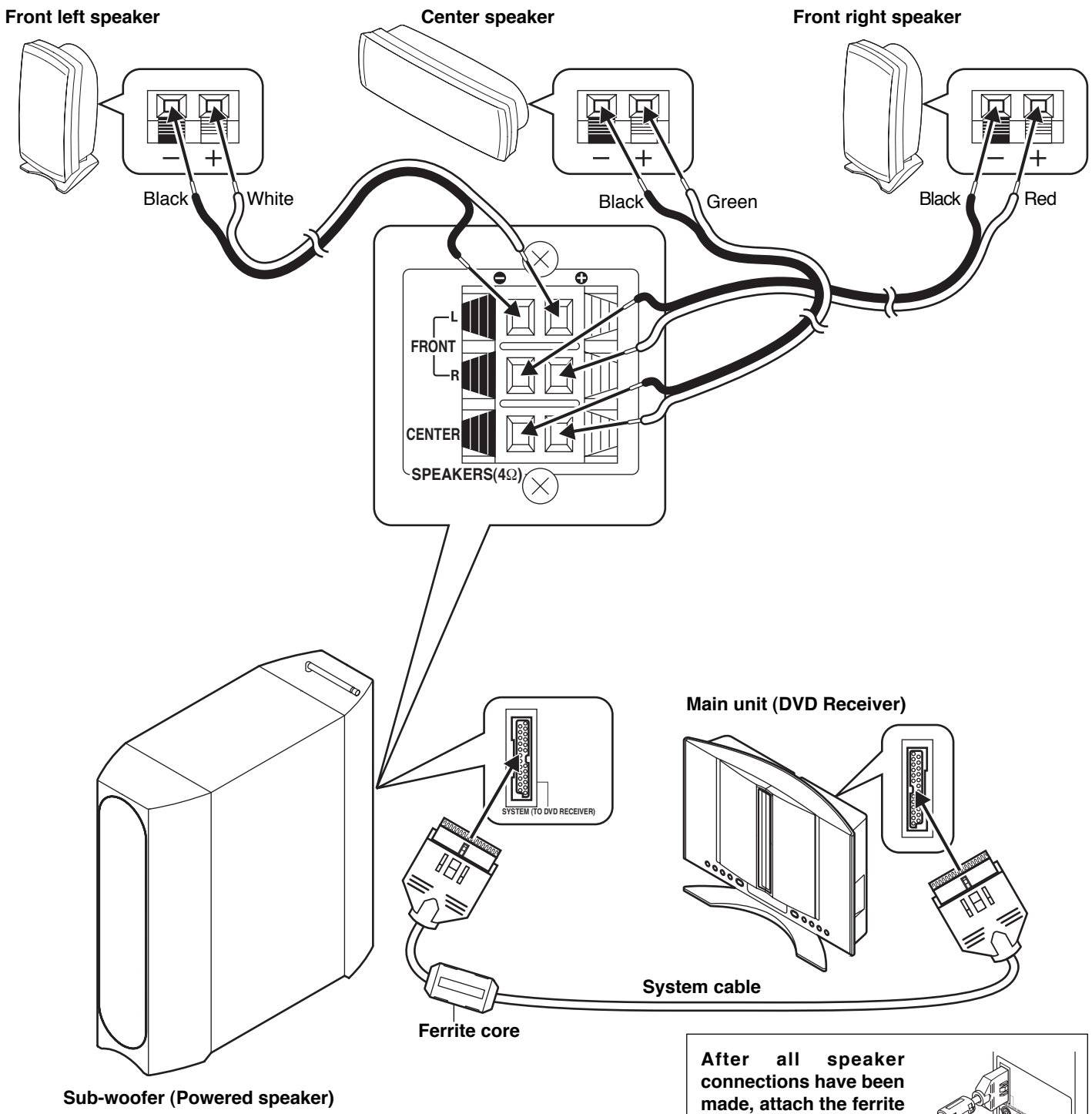

Need help? Call
1-800-813-3435

After all speaker connections have been made, attach the ferrite core.

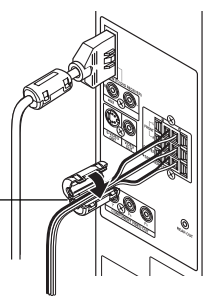

Speaker Placement

Need help? Call
1-800-813-3435

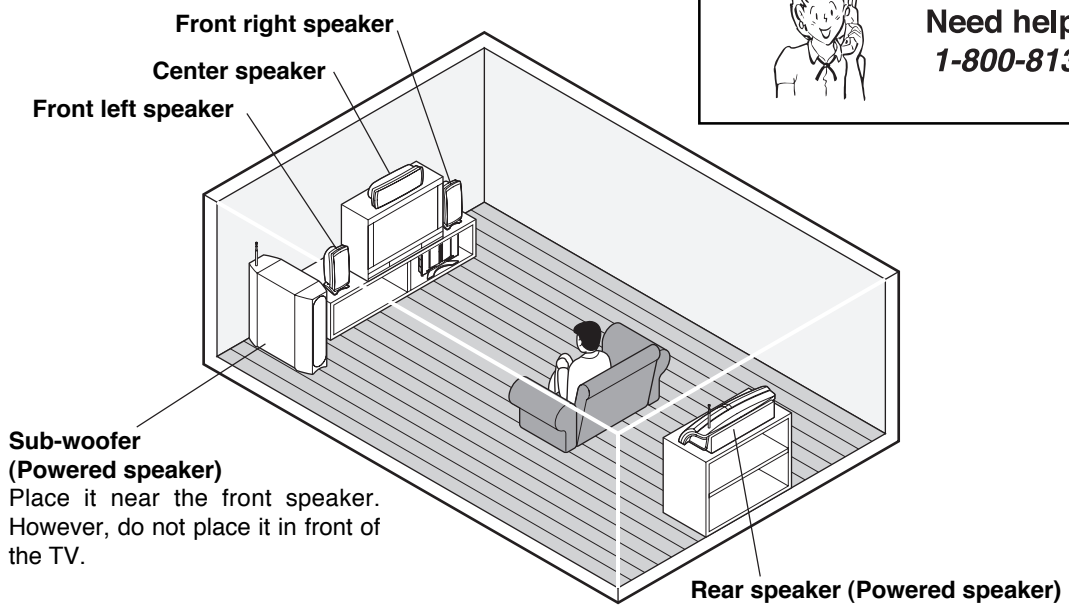

The front (left and right) and center speakers have built-in magnetic stray field compensation. They may be placed close to a TV without affecting the color purity.

Place the front left and right speakers either side of the TV.
Place the center speaker directly above the TV.
The front, center, and rear speakers should be placed at approximately the same distance from the listening position.
Place the rear speaker behind the listening position, on the floor or approximately 2 feet ~ 3 feet 3 inches (60 cm ~ 1 meter) higher than ear level.
Keep enough distance between the subwoofer and the TV so as not to garble the TV screen.

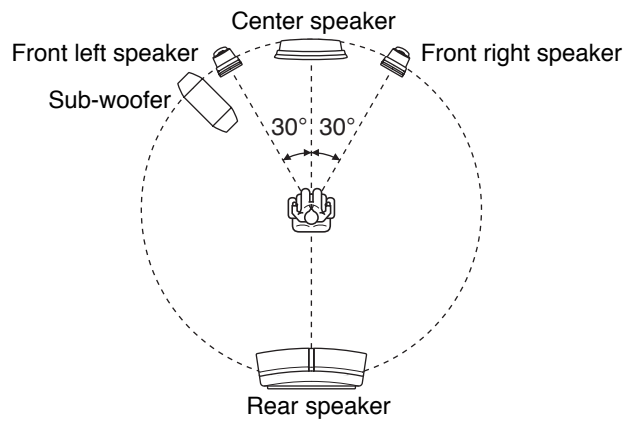

Notes:
- The angles in the diagram are approximate.
- Please refer to “Setting Audio” on page E36.
- Set the TV’s built-in speaker volume to minimum.

Example: To hang the speaker on a wall

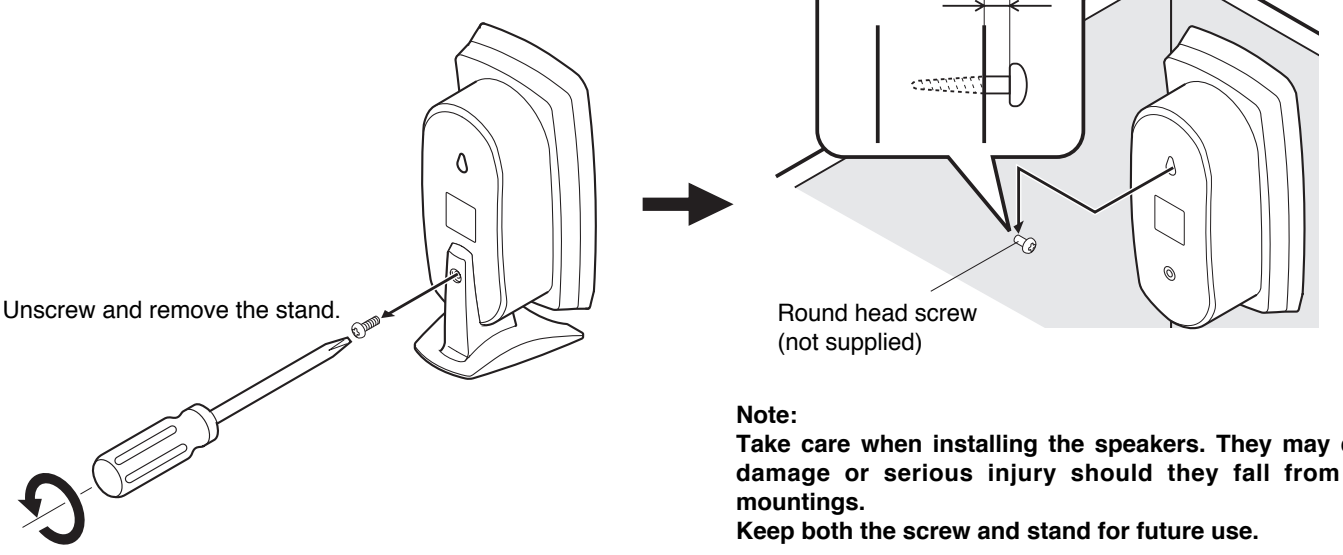

Note:
Take care when installing the speakers. They may cause damage or serious injury should they fall from their mountings.
Keep both the screw and stand for future use.

Using the Rear Speaker in Wireless Mode

1. Set the SPEAKER switch of the rear speaker to the **INTERNAL** position.

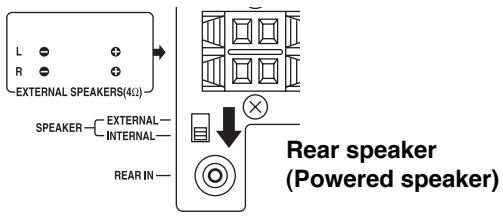

2. Pull out **gently** the antenna vertically.
   • Try not to hold, bend, or twist the antenna.

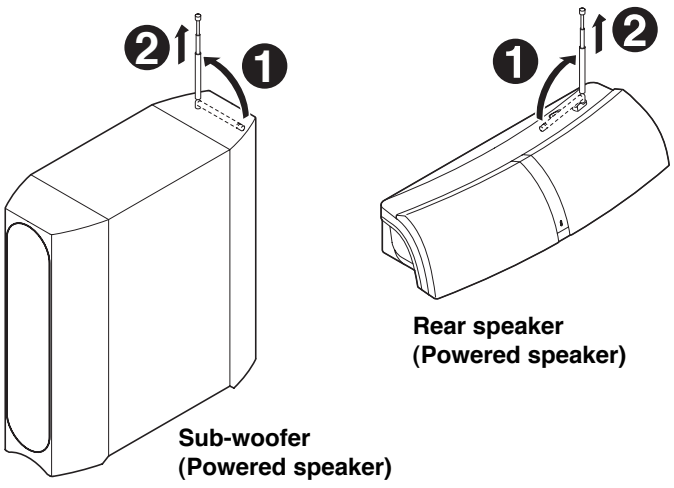

CAUTION:
Keep it out of reach of young children who might damage it.

3. Set the FREQUENCY switch to **"1", "2", "3" or "4"**.
   Match the number on both sub-woofer and rear speaker.

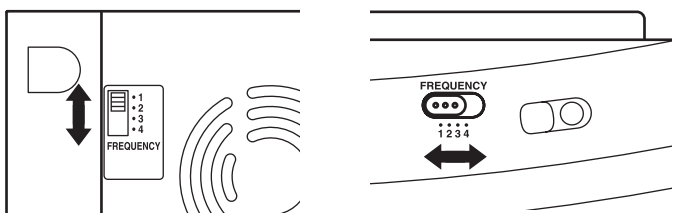

Sub-woofer (Powered speaker) **Rear speaker (Powered speaker)**

Changing the frequency setting
If noise (or skipping sound) is heard when using rear speaker in wireless mode, change the setting of the FREQUENCY switch on both sub-woofer and rear speaker.
Match the number on both sub-woofer and rear speaker.
It may improve the sounds.
The following four frequencies are available.

FREQUENCY switch
1 (914.1 MHz)
2 (914.5 MHz)
3 (914.9 MHz)
4 (915.3 MHz)

Using the Rear Speaker in Wired Mode

Because the rear speaker is the wireless type, it is not necessary to connect the assistant speaker cable under normal connections. If noise is caused to the rear speaker when used in wireless mode, change the setting of the FREQUENCY switch on both sub-woofer and rear speaker (Refer to the left column).
If noise is still caused, **turn the power off first** and connect the rear speaker to the sub-woofer using the supplied assistant speaker cable. In this case, the audio signal is sent to the rear speaker through the assistant speaker cable.

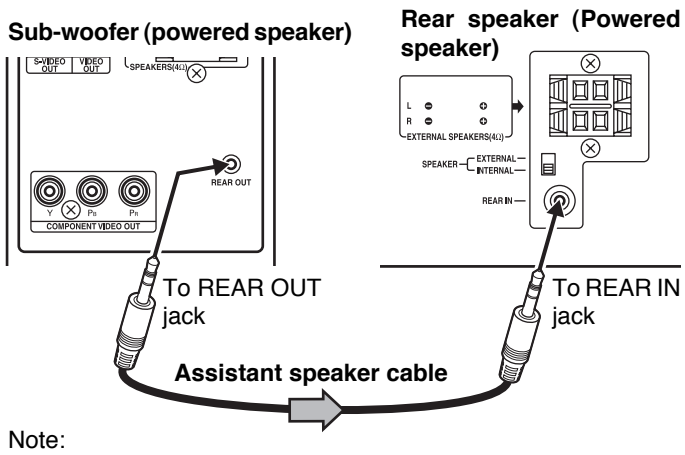

Note:
Adjust the distances between the sub-woofer and the rear speaker to be suitable shorter than approx. 23 feet cord length.

If Using the External Speaker (Not Supplied) Instead of the Rear Speaker...

1. Connect the external speaker (4 Ω, more than 50 Watts for each speaker, not supplied) to the EXTERNAL SPEAKERS terminal.

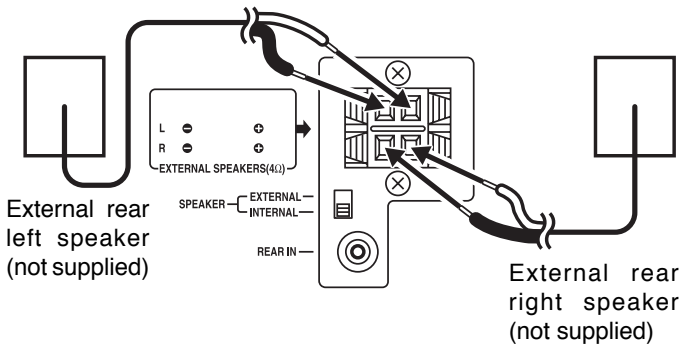

2. Set the SPEAKER switch to the **EXTERNAL** position.

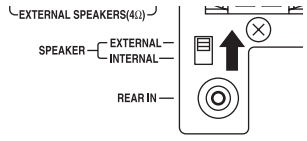

3. Place the external speaker as shown in figure.

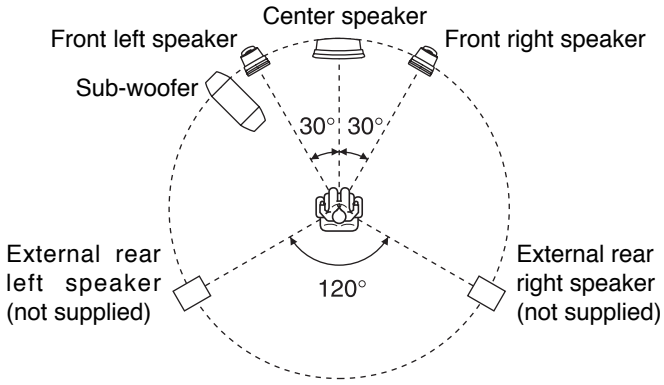

Conventional TV Connection

Important Information:
To connect the unit to a TV, TV must have a Video input jack (RCA-type) at least. You cannot connect it to an antenna terminal of TV.

Using VIDEO OUT jack
Connect the Video cable with yellow connectors (supplied) between the VIDEO OUT jack of the sub-woofer and the VIDEO INPUT jack on the TV.

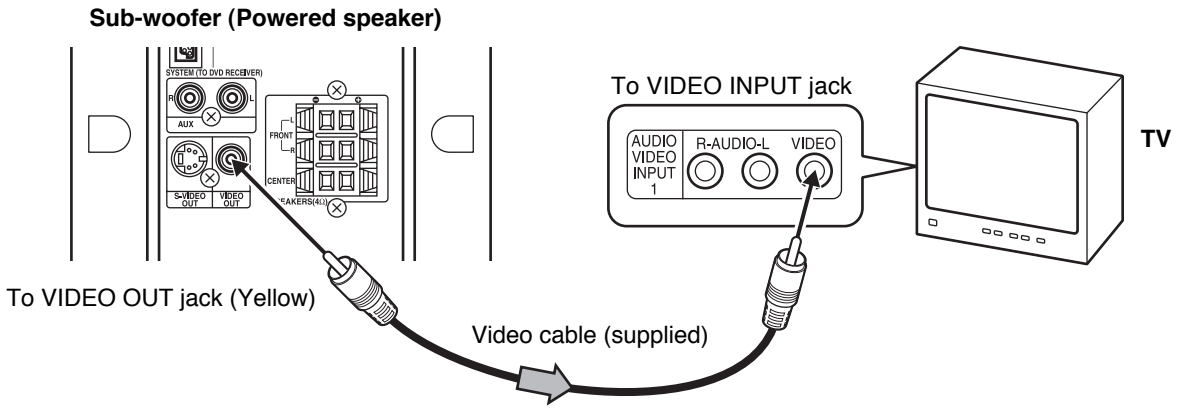

Notes:
- Please refer to your TV instruction manual.
- When you connect the subwoofer to your TV, be sure to turn off the power and disconnect both units from the wall outlet until all the connections have been made.
- Do not connect the VIDEO OUT, S-VIDEO OUT, and COMPONENT VIDEO OUT jacks of the sub-woofer to a VCR directly. The playback picture will be distorted because DVD video discs are copy protected.

Using S-VIDEO OUT jack
Note:
Please follow the steps before turning on the power.

1. If your TV has the S-VIDEO INPUT jack, connect the *S-video cable (not supplied) as shown in figure. (The VIDEO OUT jack connection is not necessary.)
   You can enjoy clearer picture playback.

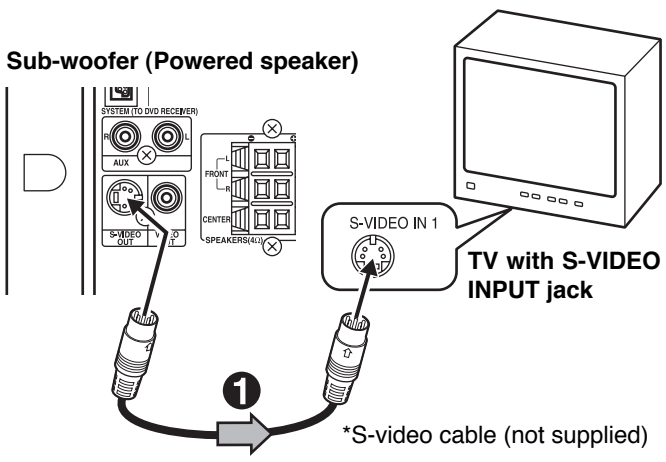

2. Set the VIDEO OUT SELECT switch to the **S-VIDEO** position.

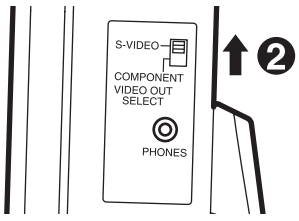

Main unit (Right side)

Using COMPONENT VIDEO OUT jacks
Note:
Please follow the steps before turning on the power.

1. If your TV has the COMPONENT VIDEO INPUT jacks, connect the *Component video cable (not supplied) as shown in figure.
   (The VIDEO OUT or S-VIDEO OUT jack connection is not necessary.)
   You can enjoy high quality picture playback.

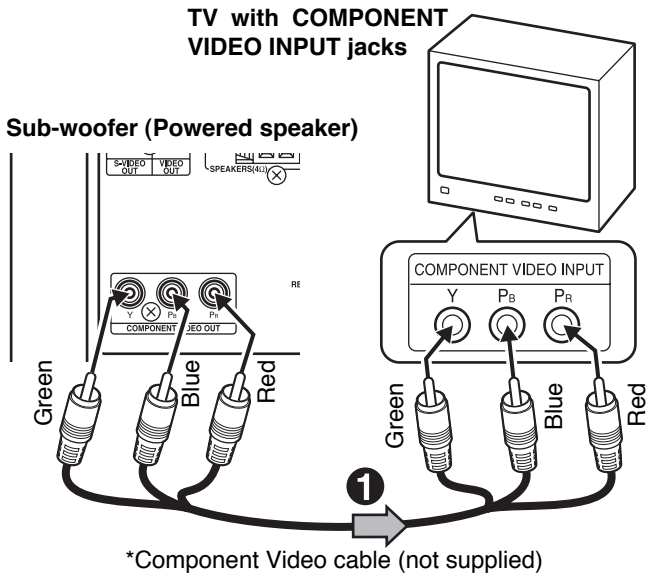

2. Set the VIDEO OUT SELECT switch to the **COMPONENT** position.

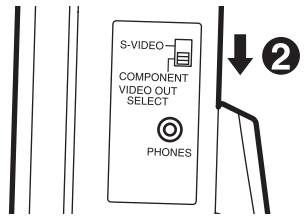

Main unit (Right side)

*Please consult your local audio/video dealer.

Using RF Modulator

If your TV does not have a Video input jack and has an antenna terminal only, please purchase the *RF Modulator (not supplied). (*Please consult your audio/video dealer.)

Example: Sub-woofer, TV and RF Modulator connections

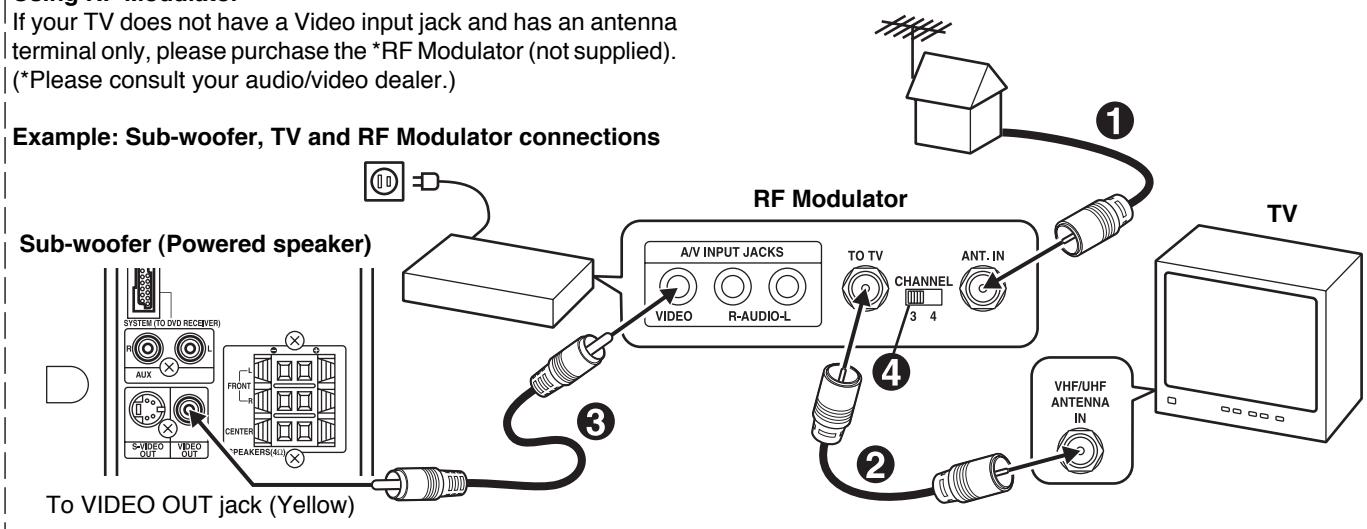

1. Connect the antenna cable (not supplied) to the ANT. IN terminal of the RF Modulator.
2. Connect the 75-ohm coaxial cable (not supplied) between the TO TV terminal of the RF Modulator and the VHF/UHF ANTENNA IN terminal of the TV.
3. Connect the Video cable with yellow connectors (supplied) between the VIDEO OUT jack of the sub-woofer and the VIDEO input jack of the RF Modulator.
4. Turn on the TV, and set the channel number (CHANNEL3 or CHANNEL4) on both TV and RF Modulator, whichever is not used for regular broadcasts in your area.

Note:
For more details, please refer to the instruction manual of the RF Modulator.

Example: Sub-woofer, VCR, TV and RF Modulator connections

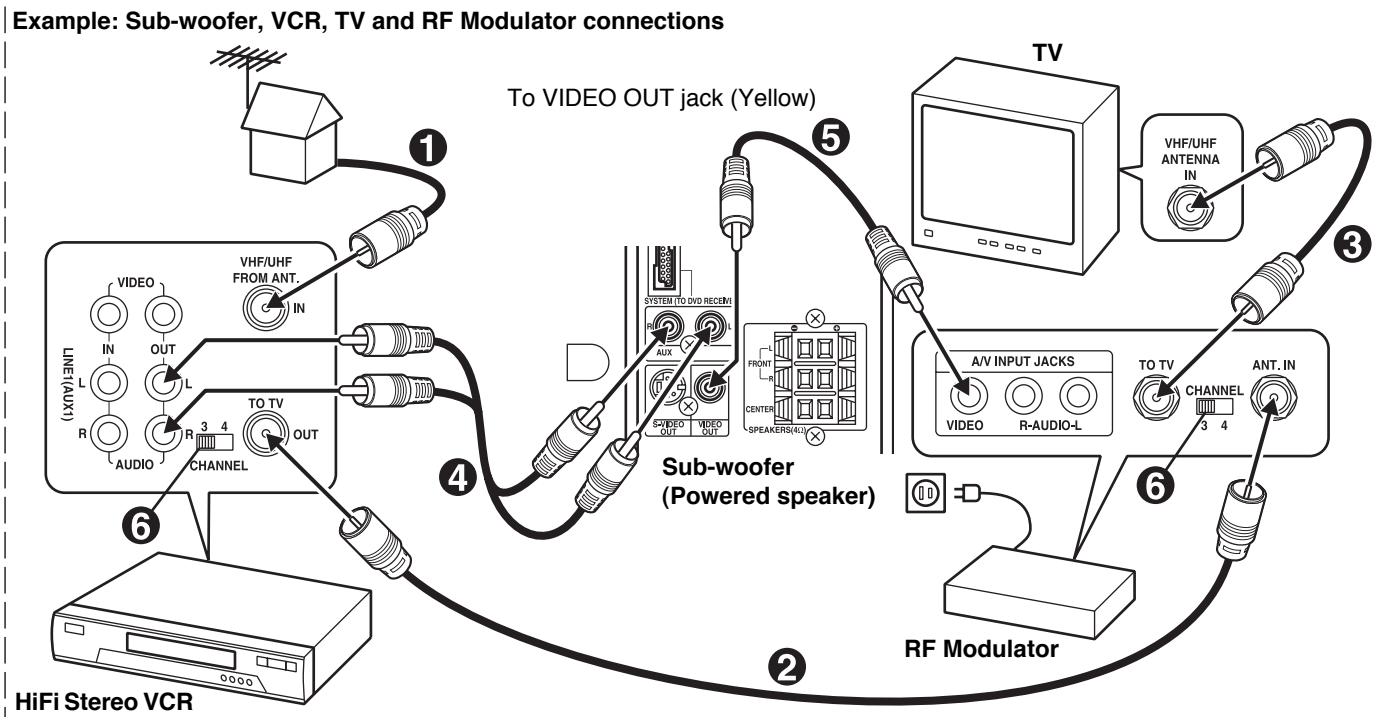

1. Connect the antenna cable (not supplied) to the VHF/UHF FROM ANT IN terminal of the VCR.
2. Connect the 75-ohm coaxial cable (not supplied) between the TO TV OUT terminal of the VCR and the ANT. IN terminal of the RF Modulator.
3. Connect the 75-ohm coaxial cable (not supplied) between the TO TV terminal of the RF Modulator and the VHF/UHF ANTENNA IN terminal of the TV.
4. Connect the audio cables (not supplied) between the AUX jacks of the unit and the AUDIO OUT jacks of the VCR. Use the red connectors for the right-R jacks and the white connectors for the left-L jacks.
5. Connect the Video cable with yellow connectors (supplied) between the VIDEO OUT jack of the sub-woofer and the VIDEO input jack of the RF Modulator.
6. Turn on the TV, and set the channel number (CHANNEL3 or CHANNEL4) on all TV, VCR and RF Modulator, whichever is not used for regular broadcasts in your area.

Note:
For more details, please refer to the instruction manual of the RF Modulator.

Progressive-scan TV Connection

Your TV must be capable of handling progressive scanning and have component video input capability.

Note:
Please follow the steps before turning on the power.

1. Connect to the component video input jacks. (The VIDEO OUT or S-VIDEO OUT jack connection is not necessary.)

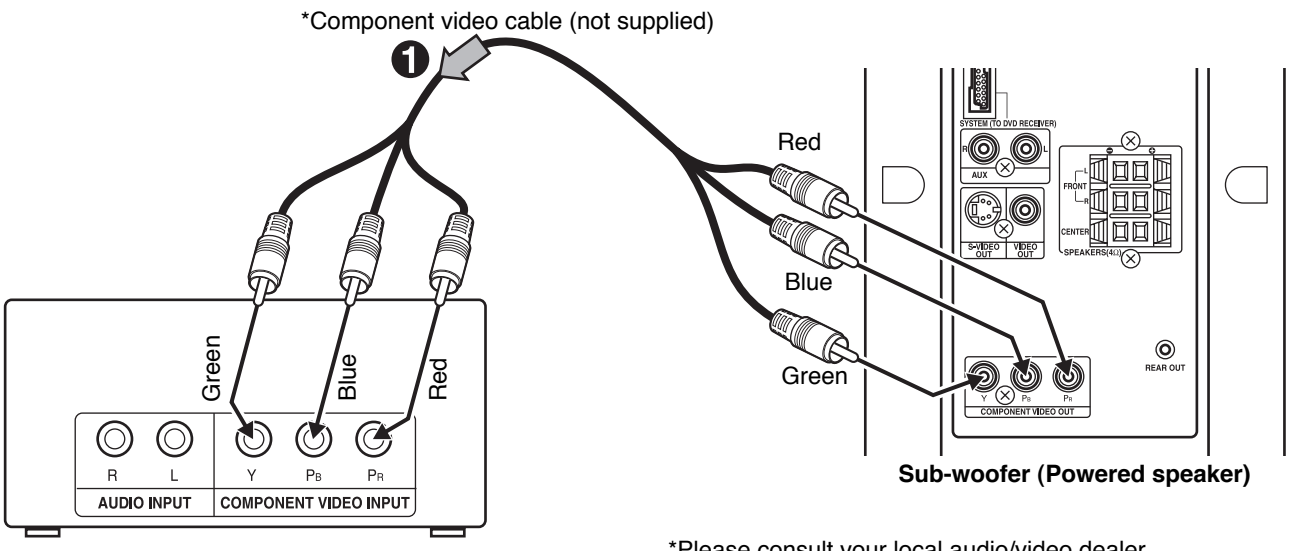

TV with progressive-scan capability

Sub-woofer (Powered speaker)

*Please consult your local audio/video dealer.

Notes:
- Please refer to your TV instruction manual.
- When you connect the unit to your TV, be sure to turn off the power and disconnect both units from the wall outlet until all the connections have been made.
- Do not connect the unit to a VCR directly. The playback picture will be distorted because DVD video discs are copy protected.

2. Set the VIDEO OUT SELECT switch to the **COMPONENT** position.

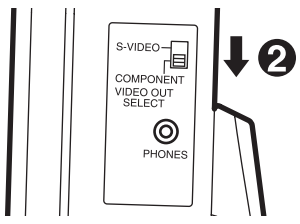

Main unit (Right side)

3. **Set the unit to the PROGRESSIVE mode. See pages E21 and E35.**

Progressive Scanning

While interlaced scanning produces one frame of video in two fields, progressive scanning creates one frame in one field. Conventional interlaced scanning constitutes one second with 30 frames (60 fields), but progressive scanning constitutes it with 60 frames from scratch. Progressive scanning can reproduce sharper picture with high resolution for still image or other picture containing long texts or horizontal lines.
This model has compliance with 525p (progressive) system.

Interlaced scanning

Progressive scanning

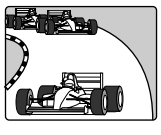

Need help? Call
1-800-813-3435

FM Antenna Connection

CAUTION:
When installing an outdoor antenna, follow the installation instructions in the attached "IMPORTANT SAFETY INSTRUCTIONS".

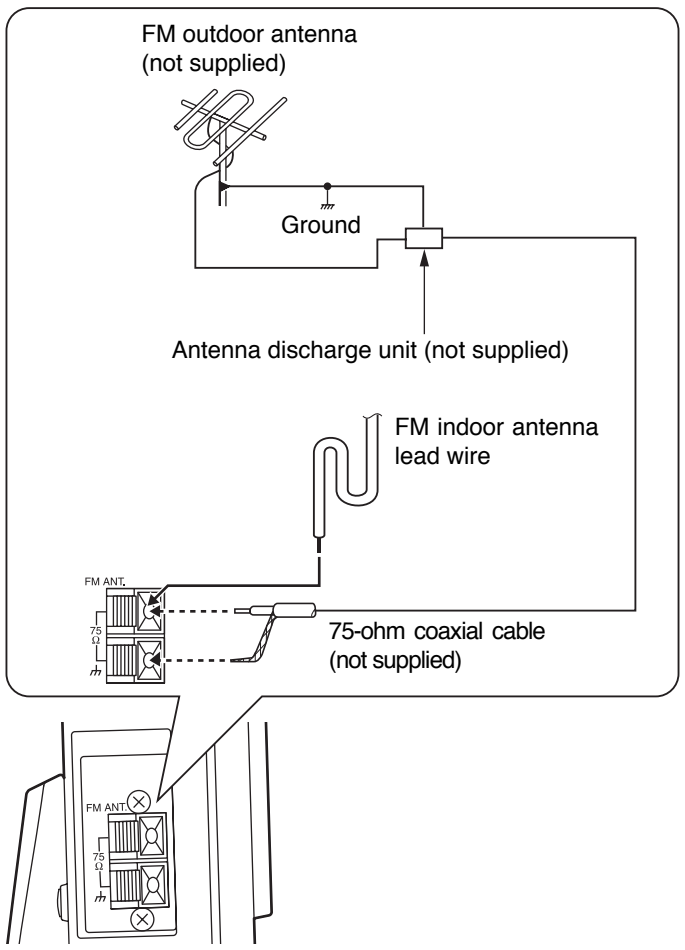

Main unit (Left side)

The FM indoor antenna lead wire is sufficient to receive most local FM broadcasts and should be connected to the rear FM 75Ω terminal. Extend the antenna lead wire as straight as possible and, while listening to the sound from the system, secure it in a position where the best FM reception is found.
In fringe areas, or where reception is distorted or noisy, an FM outdoor antenna (not supplied) should be connected instead of the FM indoor antenna lead wire. The terminals will accept 75-ohm coaxial cable.

Note:
To minimize noise...
- Do not place the antenna close to a TV or speaker.

Note to CATV system installer:
This reminder is provided to call the CATV system installer's attention to Section 820-40 of the NEC which provides guidelines for proper grounding and, in particular, specifies that the cable ground shall be connected to the grounding system of the building, as close to the point of cable entry as practical.

Additional Connection Examples

To enjoy your TV sounds
If your TV has the audio output jacks, connect an audio cable (not supplied) from the audio output jacks of the TV to the AUX jacks.

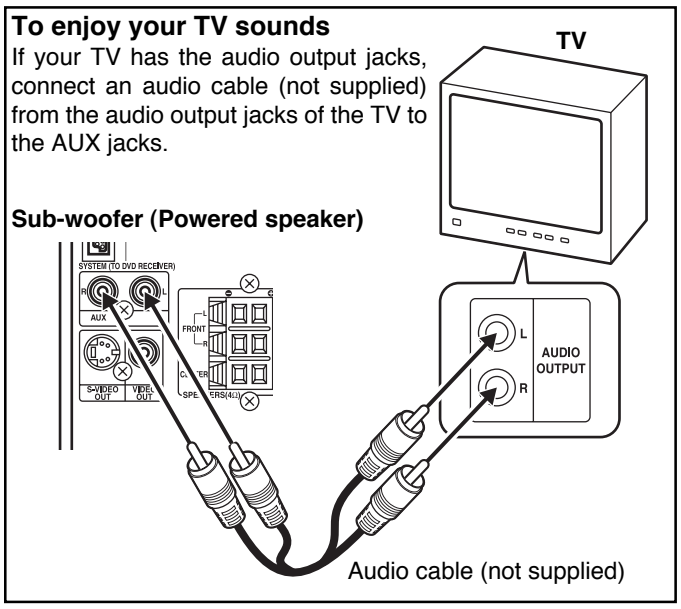

Headphones jack (PHONES)

Connect a pair of stereo headphones with miniplug (8 ohms - 32 ohms, not available from SANYO) to the PHONES jack for monitoring or for private listening. The speakers are automatically disconnected when headphones are connected.

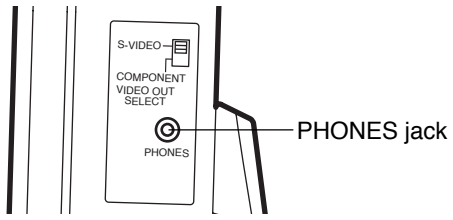

Main unit (Right side)

Power Supply (Sub-woofer and Rear Speaker)

Connect the power cord to a 120VAC 60Hz outlet.
The sub-woofer (powered speaker) and the rear speaker (powered speaker) are equipped with a polarized plug. If you have difficulty inserting the plug, turn it over and reinsert it. If these speakers will not be used for a long time, disconnect the AC plug from the AC outlet.

Notes:
- Before plugging the power cord into an AC outlet, make sure that all the connections have been made.
- The sub-woofer (powered speaker) is not disconnected from the AC power unless the power cord is unplugged from the AC outlet.

Need help? Call
1-800-813-3435

BEFORE OPERATION

Common Operation

Turning the power on and off

Main unit (DVD Receiver)

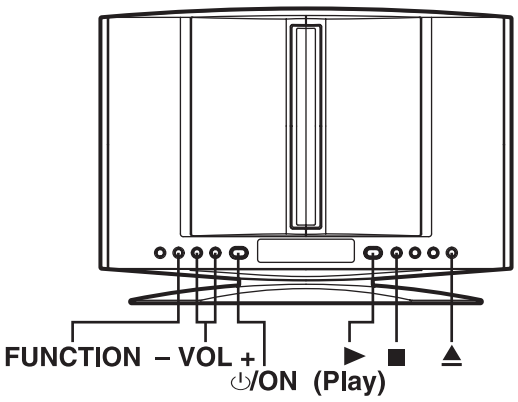

Press [⏻/ON] to turn the power on.

- "HELLO" appears briefly on the display.

(After connecting the power cord, when you press [⏻/ON] for the first time, the volume-reset feature automatically sets the initial volume level.)

When the power cord is connected to the AC outlet, the unit will respond to commands from the remote control.

To turn the power off, press [⏻/ON] again.

- "GOOD-BYE" appears briefly on the display.

Smart start function

If the following buttons are pressed when the power is turned off, the unit turns on automatically and the selected source is activated.

[⏏], [▶] (Front panel of the main unit)

[⏏], [▶], [TUNER] (Remote control)

Rear speaker

Press [⏻/ON] to turn the power on. The power indicator lights.

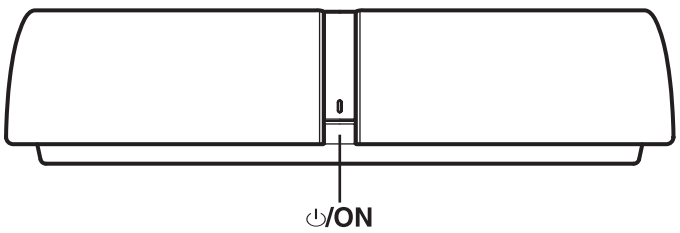

To turn the power off, press [⏻/ON] again.

Selecting the source

Press [FUNCTION] to select the desired source. Each time the button is pressed, the display changes as follows:

DVD/CD ⟶ AUX ⟶ FM TUNER ⟶ DVD/CD...

- When the source selection is changed, disc playback automatically stops.

Adjusting the volume

Press [VOLUME] + or - on the remote control (or press [VOL] + or - on the main unit). The volume level appears on the display (VOL 0 ~ VOL MAX).

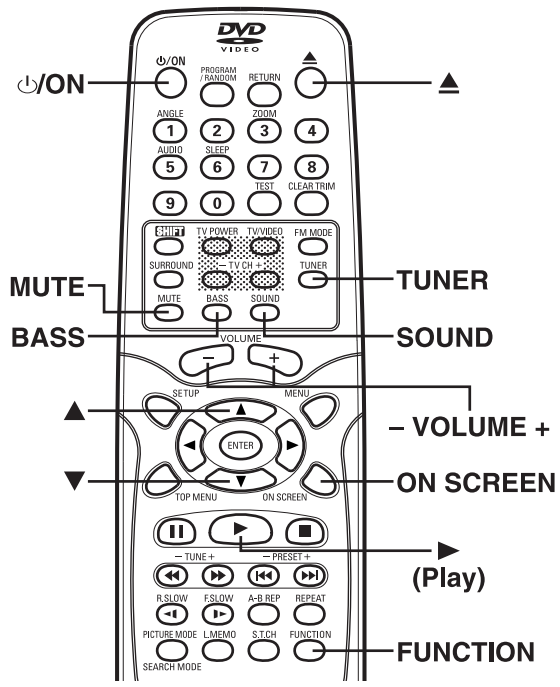

To reduce the volume temporarily (muting)

Press [MUTE] on the remote control. "MUTE" blinks on the display.

To restore the previous volume setting, press [MUTE] again.

Selecting the sound mode

1. Press [SOUND] repeatedly to select the desired sound mode ("BASS", "TREBLE" or "NIGHT").
2. Press the button as desired.

Sound mode	Press	Display change
BASS	▼ or ▲	"-5" ~ "+5"
TREBLE	▼ or ▲	"-5" ~ "+5"
NIGHT	ENTER	"ON" or "OFF"

Note for "NIGHT" mode:
When enjoying a DVD disc with the volume set low at night, select this mode. It enhances spoken lines making speech clearer.

3. Repeat steps 1 to 2 for another sound mode.
4. Press [SOUND] repeatedly to close the display.

Bass boost system

Press [BASS] repeatedly to select the desired bass boost effect.

BOOST ⟶ BASS OFF ⟶ NORMAL ⟶ BOOST. . .

Adjusting the FL display brightness

While holding [■] down **on the main unit**, press [ON SCREEN] repeatedly on the remote control.

Selecting Surround Mode

Press [SURROUND] to select the surround mode.
Each time the button is pressed, the surround mode changes as follows:
5.1 AUTO → 5.1 SURR → 2.1ch → DIRECT → 5.1 AUTO…

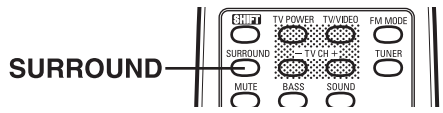

Function	FL display	Description
DVD/CD	5.1 AUTO	The unit selects the surround mode automatically depending on the disc. • If a DVD disc is encoded with Dolby Digital 5.1 channel, it is played back with Dolby Digital 5.1 channel surround sound. Not all DVD discs are encoded with Dolby Digital 5.1 channel surround sound. • If a DVD disc is encoded with Dolby Digital 2 channel or mono, it is played back with Dolby Pro Logic mode. "DDPL" appears briefly on the display. • If a DVD disc is encoded with 2 channel Linear PCM (stereo), it is played back with Dolby Pro Logic mode. "DDPL" appears briefly on the display. • Audio CDs are played back with Dolby Pro Logic mode. • MP3/WMA discs are played back with Virtual 5.1 channel surround sound.
	5.1 SURR	Disc is played back with Virtual 5.1 channel surround sound.
	2.1ch	The surround mode is set to 2.1 channel (Front left and right speakers, and Sub-woofer).
	DIRECT	Original audio signal from the disc
AUX FM TUNER (Stereo)	5.1 AUTO 5.1 SURR	The surround mode is set to Virtual 5.1 channel surround sound.
	2.1ch	The surround mode is set to 2.1 channel (Front left and right speakers, and Sub-woofer).
	DIRECT	Original audio signal
FM TUNER (Mono)	5.1 AUTO 5.1 SURR	Front left and right speakers, Center speaker, and Sub-woofer sound.
	2.1ch	The surround mode is set to 2.1 channel (Front left and right speakers, and Sub-woofer).
	DIRECT	Original audio signal

Notes:
- When using headphones, the surround mode does not change. If [BASS] or [SURROUND] is pressed, "-BASS-" or "-SURR-" appears briefly on the display.
- DVD video discs with DTS may not work correctly. You can see the picture on the TV screen, but there is no sound.
  In this case, press the AUDIO button repeatedly while holding the SHIFT button down to select Dolby Digital sound. (See page E28.)
- When receiving weak FM broadcasts, set the mode to "2.1ch". The sound quality may improve.

Manufactured under license from Dolby Laboratories.
"Dolby", "Pro Logic" and the double-D symbol are trademarks of Dolby Laboratories.

Need help? Call
1-800-813-3435

Adjusting the Speaker Volume Balance

This unit is set to the standard level before shipping from the factory. You may not need any adjustment.
However, depending on the size of the room and the placement of the speakers, you may benefit from a fine adjustment.
In this case, follow the steps below. Please use the remote control when the test tone sounds.
Note:
Do not connect the headphones.

1. Press [FUNCTION] to select “DVD/CD”.

2. Press [■] to stop playback completely.

3. Press [TEST] on the remote control.
   The “Speaker” screen appears on the TV screen.

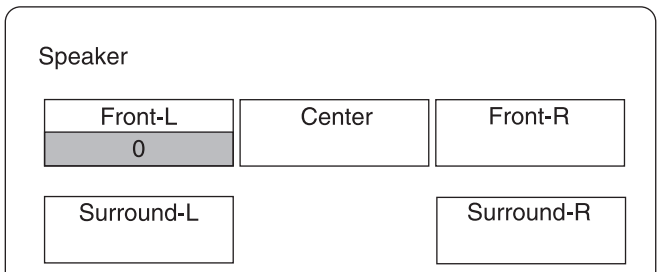

   “FNT-L 0” appears on the display.
   The test tone will be heard from each speaker sequentially as follows:

TV screen	FL display	Speaker
Front-L	FNT-L 0	Front left speaker
Center	CENT 0	Center speaker
Front-R	FNT-R 0	Front right speaker
Surround-R	SUR-R 0	Rear (surround right) speaker
Surround-L	SUR-L 0	Rear (surround left) speaker

   Note:
   There are Surround left and right speakers in the rear speaker.

4. Press [VOLUME] + or - until the test tone becomes a comfortable level.

5. If the test tone level is not the same from each speaker, press [▼] or [▲] to adjust it while the speaker is activated.
   The level appears on the TV screen and display.

   Front-L: “-10” ~ “0” appears.
   Center: “-10” ~ “+10” appears.
   Front-R: “-10” ~ “0” appears.
   Surround-R: “-10” ~ “+10” appears.
   Surround-L: “-10” ~ “+10” appears.

   If necessary, repeat this step again.

6. Press [TEST] to turn the test tone off.
   Note:
   If no adjustments are made, the original display returns after the test tone has cycled around 5 times.

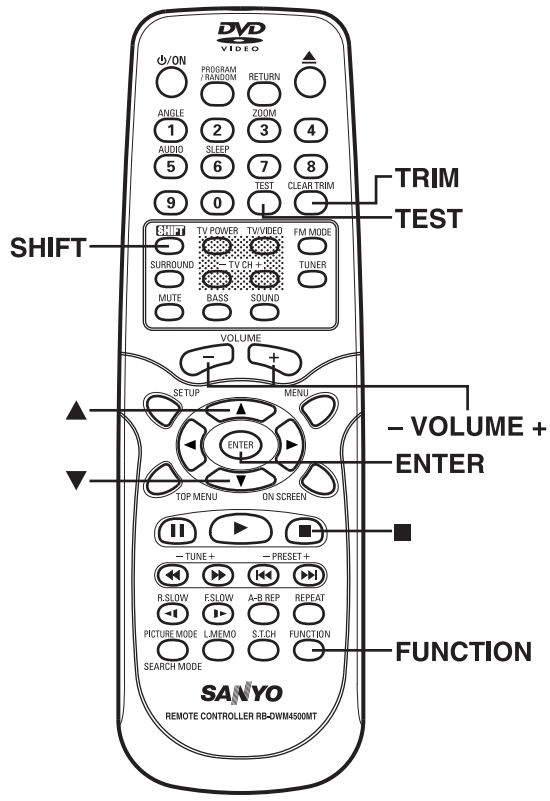

Adjusting the Sub-woofer Level

Note:
Do not connect the headphones.

1. Press [TRIM] while holding [SHIFT] down.
   “FNT-L 0” appears on the display.
   Note: No test tone.

2. Press [ENTER] repeatedly to select “SUB.W 0”.
   Note:
   Each time the button is pressed, the display will show the selected speaker and tone level.

3. Press [▼] or [▲] to adjust the level as desired.
   SUB.W: “-10” ~ “+10” appears.
   Note:
   If another speaker is selected, the level can also be changed as above.

4. Press [TRIM] while holding [SHIFT] down to turn it off.
   Note:
   If no adjustments are made, the original display returns after approximately 10 seconds.

IMPORTANT INFORMATION:
Set the delay time for your center and surround speakers. See “Setting Audio” on page E36.

Need help? Call
1-800-813-3435

PLAYABLE DISCS

The following types of discs can be played on this unit.

Disc type and logo mark	
DVD-Video	DVD VIDEO
Audio CD	COMPACT disc DIGITAL AUDIO

Region Number

Region number (Regional restriction code) is built-in to the unit and DVD video discs.
Region number “1” or “ALL” of DVD video discs can be used on this unit.

DVD Video Disc

DVD video discs are divided into titles, and the titles are sub-divided into chapters.

Title 1		Title 2		
Chapter 1	Chapter 2	Chapter 1	Chapter 2	Chapter 3

There are the marks on some DVD video disc package.
Examples:

3	Multiple languages
2	Multi-language subtitles
3	Multi-angle
16:9 LB	Multi-aspect
1	Region number
CC	Closed caption

Audio CD Disc

Audio CD discs are divided into tracks.

Track 1	Track 2	Track 3	Track 4	Track 5

Need help? Call
1-800-813-3435

CAUTION:

- Only the above types of discs can be played on this unit. DVD-ROM, CD-ROM, SVCD, CVD, VCD, etc. cannot be played.
- This unit can play back the DVD-R that has recorded movie data as well. However, some DVD-Rs cannot be played back depending on the recording conditions.
- The DVD-R that has no movie data cannot be played back.
- The DVD-RW (Video mode) can be played back. However, some DVD-RWs cannot be played back depending on the recording conditions. The DVD-RW (VR mode) cannot be played back.
- The DVD+R/+RW can be played back. However, some DVD+R/+RWs cannot be played back depending on the recording conditions.
- This unit is to be used exclusively with the NTSC color system.
- **For MP3/WMA CD, please see page E31.**
- **For Picture/JPEG CD, please see page E32.**

Handling, Storing and Cleaning Discs

- Do not touch the disc door while it is moving.
- Never put anything except a 5-inch (12cm) or 3-inch (8cm) DVD (or CD) into the disc compartment.
  Foreign objects can damage the unit.
- Fingerprints and dust should be carefully wiped from the signal surface of the disc (glossy side) with a soft cloth. Wipe in a straight motion from the center to the outside of the disc.
- Never use chemicals such as record cleaning sprays, antistatic sprays or fluids, benzene or thinner to clean the discs. These chemicals will permanently damage the plastic surface of the disc.
- To remove a disc from its storage case, press down on the center of the case and lift the disc out, holding it carefully by the edges.
- Discs should be returned to their cases after use to protect them from dust and scratches.
- To prevent warping the disc, do not expose it to direct sunlight, high humidity or high temperatures for extended periods of time.
- Do not apply paper or write anything on either side of the disc. Sharp writing instruments, or the inks used in some felt-tip pens, may damage the surfaces of the disc.

This product incorporates copyright protection technology that is protected by method claims of certain U.S. patents and other intellectual property rights owned by Macrovision Corporation and other rights owners. Use of this copyright protection technology must be authorized by Macrovision Corporation, and is intended for home and other limited viewing uses only unless otherwise authorized by Macrovision Corporation. Reverse engineering or disassembly is prohibited.

DISC PLAYBACK

Preparations

- Turn on the TV and select the video input source. Refer to your TV's owner manual.

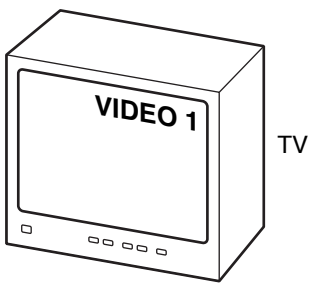

- Select the playback picture size according to the aspect ratio of the TV. (See "Setting Display" in "INITIAL SETTINGS" on page E34.)

4:3 LB
(Letterbox)

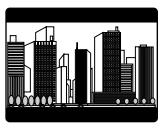

4:3 PS
(Panscan)

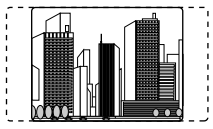

16:9

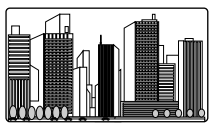

Important Note:

- This instruction manual explains the basic instruction of this unit using the remote control unit.
- Some DVD video discs have different functions that may not be explained in this instruction manual. You may need extra instructions. In this case, please follow the instructions displayed on the TV screen or jacket or case of the disc.
- " ⊘ " may appear on the TV screen during operation. This icon means that the function is not available on the disc now.
- For improvement, on-screen displays subject to change without notice.

- **When you use a TV with Progressive-scan capability and connect it to the COMPONENT VIDEO OUT jacks of the sub-woofer (See page E15), you must select the PROGRESSIVE mode. (For more details, please refer to your TV's owner manual.)**

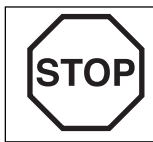

If you use a Conventional TV or non-progressive-scan TV, skip this section.

1. Set the VIDEO OUT SELECT switch to the **COMPONENT** position before turning the power on. (See page E15.)
2. Press [⏻/ON] to turn the power on.
3. Press [FUNCTION] to select "DVD/CD".
4. Select "TV System: NTSC" and "Progressive: On" in "Setting Display" (See pages E34 and E35.), and close the setup screen.
5. In "NO DISC" mode, press and hold down [►►I] on the remote control until the following message appears on the TV screen.

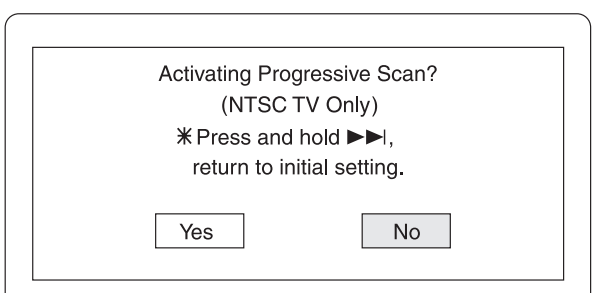

6. Press [◄] to select "Yes".
7. Press [ENTER].
   The progressive mode is set. " ▭P " (Progressive) appears briefly and "SANYO" logo screen returns.
   Note:
   If you do not want it, select "No", then press [ENTER].

If you accidentally select it and switch the setting back again, press and hold down [►►I] until "▤I" (INTERLACE) appears briefly on the TV screen.

Note:
In " ▭P " mode, the closed caption may not appear on the TV screen.

Need help? Call
1-800-813-3435

Basic Playback

When operation buttons are pressed, that operation is displayed on the TV screen. The display disappears after several seconds.

1. Press [⏻/ON] to turn the power on.

2. Press [FUNCTION] to select “DVD/CD”.

3. Press [▲].
   “OPEN” appears on the display and the disc door opens.

4. Place the disc (label facing toward you) on the disc turntable until it clicks.

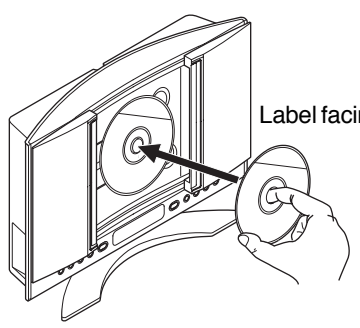

CAUTION:
Never touch the lens!

5. Press [▲] to close the disc door.
   - “CLOSE” ---> “READING” appears on the display.
   - Playback starts automatically.

   Example:

Chapter number Elapsed playing time

Note:
Some discs may not start playback automatically. In such case, press [▶] (Play) to start playback.

CAUTION:
Do not touch the disc door while it is closing. This will damage the inside of the unit and the disc.

Notes:
- In some discs, even if 4:3 PS is selected, the black bands may remain on the screen.
- If the disc is loaded with the label side downward (and it is a single sided disc), or if a badly scratched disc is loaded, “NO DISC” (or “NO PLAY”) appears. If this occurs, load the disc correctly or replace the disc.

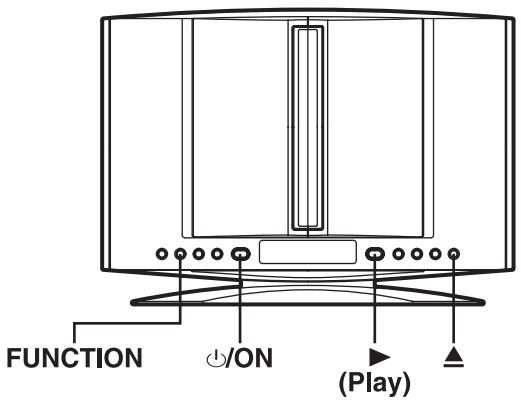

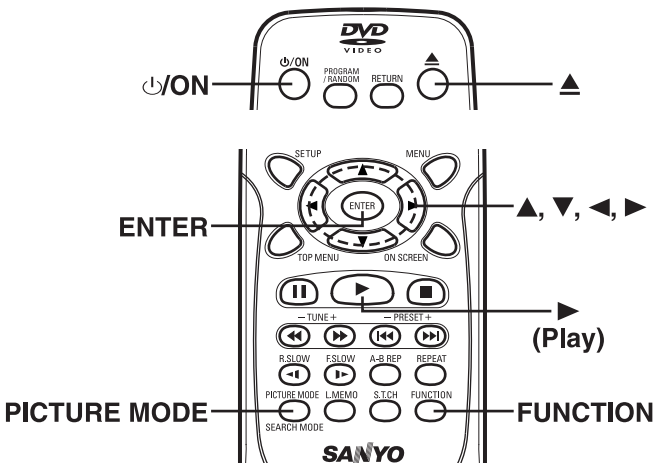

If a DVD disc menu screen appears on the TV screen...

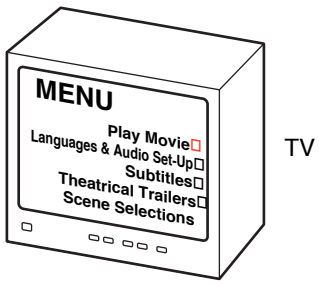

1. Press [▲], [▶], [▼] or [◀] (or the number buttons) to select the desired menu.
2. Press [ENTER].
   Playback of the selected menu starts.

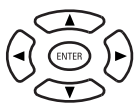

Note:
For more details, please refer to the jacket or case of the disc.

Selecting Picture Mode

1. Press [PICTURE MODE]. “Video Enhance” screen appears.

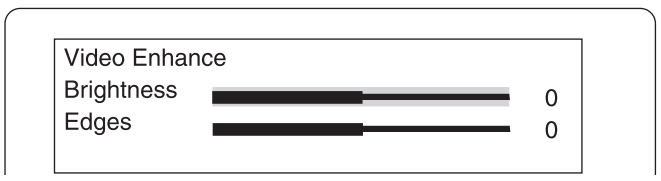

2. Press [▼] or [▲] to select “Brightness” or “Edges”.
3. Press [▶] or [◀] to adjust the level as desired. Usually set “0”.
4. Press [PICTURE MODE] again to close the screen.

Need help? Call
1-800-813-3435

Stopping Playback

- Press [■] **once** during playback. "Resume ■" appears briefly on the TV screen.
  When you press [▶] (Play), playback starts automatically from the point where you stopped. "▶" appears briefly on the TV screen.
  Note:
  Some discs may not resume playback.
- Press [■] **twice** during playback. "■" appears briefly on the TV screen and playback stops completely.
  When you press [▶] (Play), playback starts from the beginning of the disc.

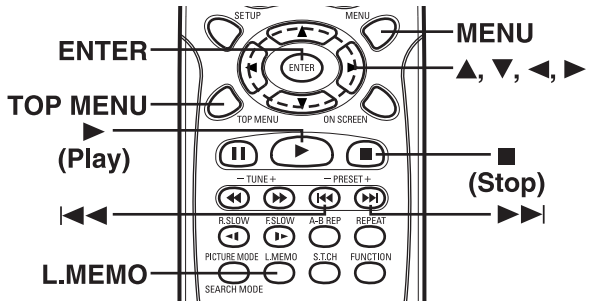

Continuing Playback from Where You Stopped Watching (LAST MEMO PLAY), for DVD only

1. Press [L.MEMO] to stop playback.
   "LAST MEMO ■" appears briefly on the TV screen.
   "LM STOP" appear on the display.

2. Remove the disc or turn off the power.

3. Load the disc (and press [▶] (Play)), or turn on the power.
   "LAST MEMO PLAY?" appears on the TV screen.

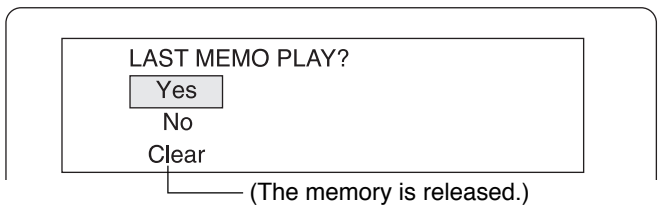

4. Press [▲] to select "Yes".

5. Press [ENTER].
   Playback resumes from the point where you stopped.

Notes:
- Point on up to 3 discs can be memorized.
- The Last Memo Play mode may not work correctly with some discs.

Selecting a DVD Menu

Notes:
- The operation may differ depending on the disc used.
- Selecting a menu may not be possible on some discs.

1. Press [MENU].
   The main menu screen will appear.

   Note:
   Press [MENU] again to resume playback.

2. Press [▲], [▼], [◀] or [▶] (or the number buttons) to select the desired menu.

3. Press [ENTER]
   The selected menu playback starts.

Note:
If [RETURN] is pressed in some discs, it returns to the previous menu screen.

Selecting a Top Menu [DVD]

Notes:
- The operation may differ depending on the disc used.
- Selecting a top menu may not be possible on some discs.

1. Press [TOP MENU].
   The top menu will appear (if the disc contains a top menu).

2. Press [▲], [▼], [◀] or [▶] (or the number buttons) to select the desired menu.

3. Press [ENTER].
   The selected menu playback starts.

Chapter (Track) Skip

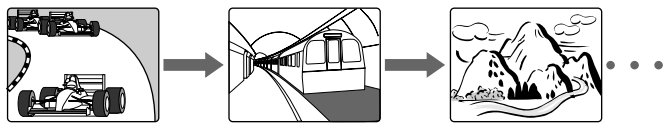

Skipping forward
Press [▶▶|] during playback to skip to the next chapter (or track).
"▶▶|" appears briefly on the TV screen.
A chapter (or track) is skipped each time the button is pressed.

Skipping backward
Press [|◀◀] during playback to skip back to the beginning of the chapter (or track) currently played.
"|◀◀" appears briefly on the TV screen.
Press the button again immediately to skip back to the beginning of the previous chapter (or track).

Note:
You can skip only through the chapters, not over the title on the DVD disc.

Important Note:
" ⃠ " may appear on the TV screen during operation. This icon means that the function is not available on the disc now.

Need help? Call
1-800-813-3435