ELECTROMAGNETIC EMISSIONS COMPLIANCE REPORT
CERTIFICATION TO FCC PART 15 REQUIREMENTS

for

INTENTIONAL RADIATOR

1.80 &1.82MHZ TRANSCEIVER

MODEL NO: AM1010B

FCC ID NO: NQ2AM1010B

REPORT NO: 99U0393

ISSUE DATE: AUGUST 02,1999

Prepared for

ADVANCED MOBIL SOLUTIONS, INC.
375 RHEEM BLVD.
MORAGA, CA 94556

Prepared by

COMPLIANCE ENGINEERING SERVICES, INC.
d.b.a.
COMPLIANCE CERTIFICATION SERVICES
1366 BORDEAUX DRIVE
SUNNYVALE, CA 94089, USA
TEL: (408) 752-8166
FAX: (408) 752-8168

TABLE OF CONTENTS **PAGE**

1. VERIFICATION OF COMPLIANCE 1

2. Product Description 2

3. Test Facility 2

4. Measurement Standards 2

5. Test Methodology 2

6. Measurement Equipment Used 2

7. RADIATED EMISSION LIMITS 3

8. SYSTEM TEST CONFIGURATION 3

9. Test Procedure 3

11. TEST RESULT 6

TEST DATA

This report shall not be reproduced except in full, without the written approval of CCS.

1. VERIFICATION OF COMPLIANCE

COMPANY NAME : ADVANCED MOBIL SOLUTIONS, INC.
375 RHEEM BLVD.
MORAGA, CA 94556

CONTACT PERSON : SANDRA SOHN/ REGULATORY TEST ENGINEER

TELEPHONE NO. : (925)377-3257

EUT DESCRIPTION : 1.8 & 1.82MHZ TRANSCEIVER

MODEL NAME/NUMBER : AM1010B

FCC ID : NQ2AM1010B

DATE TESTED : JULY 6,1999

REPORT NUMBER : 99U0393

TYPE OF EQUIPMENT	WIRELESS BASE STATION FOR CELL PHONE
EQUIPMENT TYPE	1.8 & 1.82MHZ TRANSMITTER
MEASUREMENT PROCEDURE	ANSI C63.4 / 1992
LIMIT TYPE	CERTIFICATION
FCC RULE	CFR 47, PART 15

The above equipment was tested by Compliance Engineering Services, Inc. for compliance with the requirements set forth in CFR 47, PART 15. This said equipment in the configuration described in this report shows that maximum emission levels emanating from equipment are within the compliance requirements.

MIKE C.I. KUO / VICE PRESIDENT
COMPLIANCE ENGINEERING SERVICES, INC.

COMPLIANCE ENGINEERING SERVICES, INC. CCS DOCUMENT NO:CCSUP4020B
1366 BORDEAUX DRIVE, SUNNYVALE, CA 94089, USA TEL:(408)752-8166 FAX:(408)752-8168

This report shall not be reproduced except in full, without the written approval of CCS.

2. Product Description

Fundamental Frequency	**1.8 & 1.82MHZ**
Power Source	**12VDC**
Usage	**Audio**
Antenna type	**Permanently attached**
No. of external connector and type	**1, RJ11**
Associated Transmitter	**FCC ID:NQ2AM1010H**

3. Test Facility

The 3/10/30 meter open area test site and conducted measurement facility used to collect the radiated data is located at 561F Monterey Road, Morgan Hill, California, U.S.A. A detailed description of the test facility was submitted to the Commission on May 27,1994.

4. Measurement Standards

The site is constructed and calibrated in conformance with the requirements of ANSI C63.4/1992.

5. Test Methodology

For an intentional radiator, the spectrum shall be investigated from the lowest radio frequency signal generated in the device, without going below 9 KHz, up to at least the tenth harmonic of the highest fundamental frequency or to 40 GHz, whichever is lower. (CFR 47 Section 15.33)

6. Measurement Equipment Used

Manufacturer	**Model Number**	**Description**	**Cal Due Date**
H.P.	8566B	Spectrum Analyzer (100Hz – 22GHz)	09/99
EMCO	6502	Active Loop Antenna (.009-30.0MHZ)	2/00
H.P.	8447D	Preamplifier	09/99

COMPLIANCE ENGINEERING SERVICES, INC. CCS DOCUMENT NO:CCSUP4020B
1366 BORDEAUX DRIVE, SUNNYVALE, CA 94089, USA TEL:(408)752-8166 FAX:(408)752-8168
This report shall not be reproduced except in full, without the written approval of CCS.

		(0.1 - 1300 MHz)	

7. RADIATED EMISSION LIMITS

GENERAL REQUIREMENTS	SECTION 15.209.
OPERATION IN THE BAND 1.705-10MHZ	SECTION 15.223

8. SYSTEM TEST CONFIGURATION

Support Equipment:
DC Power Supply, Kenwood, PA36-3A
Cellular Phone, Motorola Star Tac, 80067NABPA, FCC ID:IHDT5VG1 EE3
Head Set, Advanced Mobil Solutions, AH1010H

Radiated Open Site Test Set-up

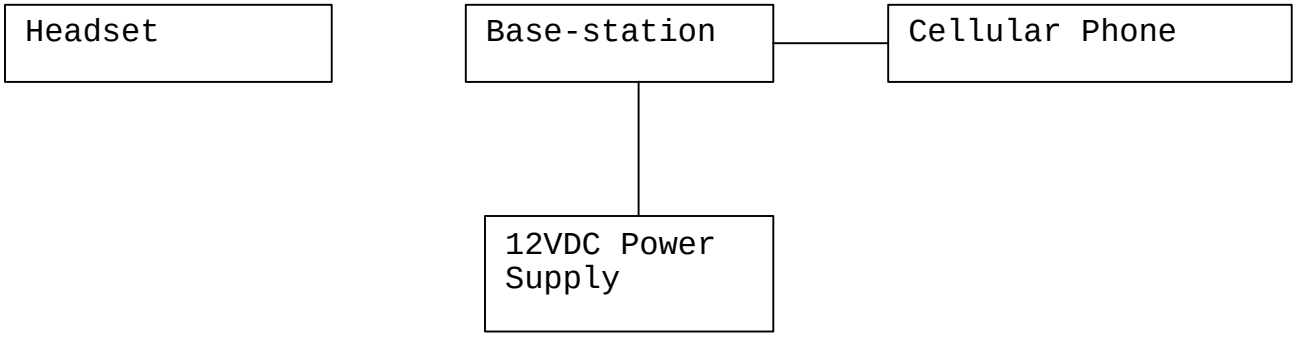

9. Test Procedure

Radiated Emissions, 15.209 15.223

COMPLIANCE ENGINEERING SERVICES, INC. CCS DOCUMENT NO:CCSUP4020B
1366 BORDEAUX DRIVE, SUNNYVALE, CA 94089, USA TEL:(408)752-8166 FAX:(408)752-8168
This report shall not be reproduced except in full, without the written approval of CCS.

Test Set-up for frequency range 0.4-20MHz

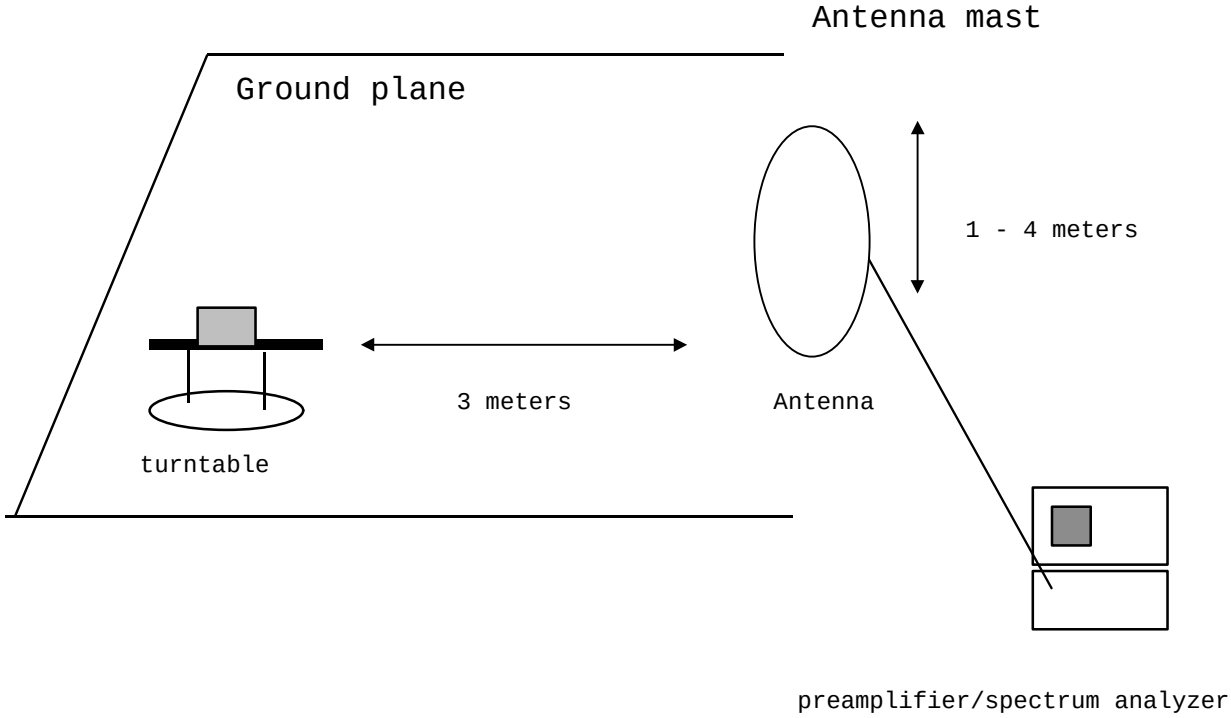

Fig. 1

1. The EUT was placed on a wooden table on the outdoor ground plane. The search antenna was placed 3-meters from the EUT.

2. The turntable was slowly rotated to locate the direction of maximum emission. The EUT was moved throughout the.

3. Once maximum direction was determined, the search antenna was raised and lowered .The maximum readings so obtained are recorded in the data listed below.

4. Steps 1-3 were repeated at 5 and 10 meters.

3, 5 and 10 meter measurements were plotted on semi-log paper to extrapolate to 30 meter data.

COMPLIANCE ENGINEERING SERVICES, INC. CCS DOCUMENT NO:CCSUP4020B
1366 BORDEAUX DRIVE, SUNNYVALE, CA 94089, USA TEL:(408)752-8166 FAX:(408)752-8168

This report shall not be reproduced except in full, without the written approval of CCS.

10. SETUP PHOTOS

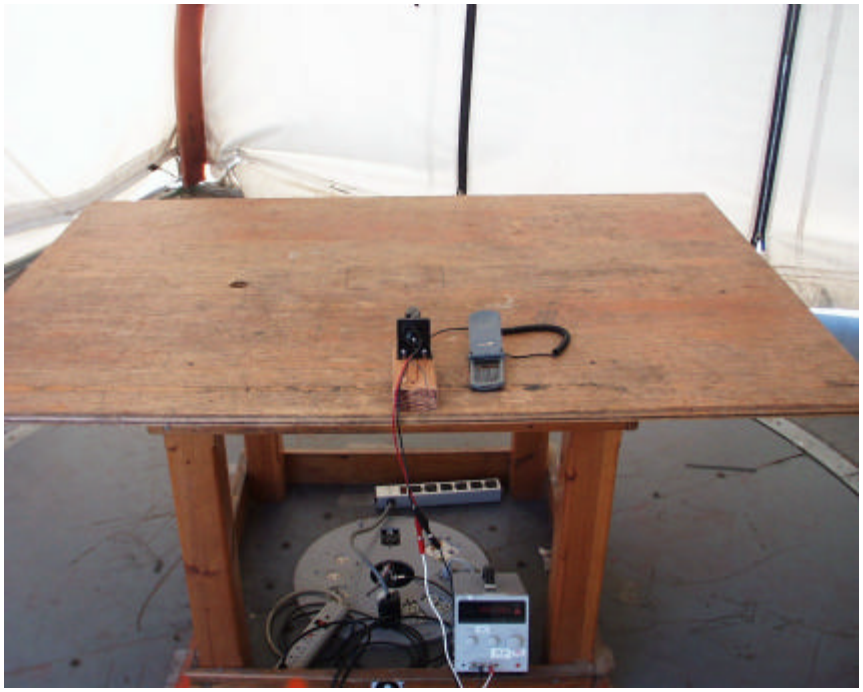

COMPLIANCE ENGINEERING SERVICES, INC. CCS DOCUMENT NO:CCSUP4020B
1366 BORDEAUX DRIVE, SUNNYVALE, CA 94089, USA TEL:(408)752-8166 FAX:(408)752-8168

This report shall not be reproduced except in full, without the written approval of CCS.

11. TEST RESULT

All harmonics were measured at 3, 5 and 10 meters. Only the frequency with the highest set of readings in each frequency/field strength limit were extrapolated to 30 meters. See attached data sheet and semi-log plots:

Base Station

FREQ KHz	3M dBuV	5M dBuV	10M dBuV	AF dB	3M dBuV/m	5M dBuV/m	10M dBuV/m
Peak							
1806	41.4	30.6	18.1	9.9	51.3	40.5	28
3612	12.8	6.7	6.7	9.9	22.7	16.6	16.6
5418	8.8	4.6	4	9.5	18.3	14.1	13.5
7224	7	3	0.6	9.3	16.3	12.3	9.9
9003	6.2	1.9	1.6	9.1	15.3	11	10.7
10836	3.8	-0.1	-0.4	8.8	12.6	8.7	8.4
12642	2.2	-1.7	-0.2	8.7	10.9	7	8.5
14448	3.1	-0.2	-1	8.6	11.7	8.4	7.6
16254	2.8	-1.7	-1.7	8.5	11.3	6.8	6.8
18060	1.6	-1	-1.1	8.4	10	7.4	7.3
Average							
1806	40	29.4	16	9.9	49.9	39.3	25.9
3612	7.6	2.4	-1.4	9.9	17.5	12.3	8.5
5418	2.6	0.6	-4.8	9.5	12.1	10.1	4.7
7224	0.9	-1.2	-7	9.3	10.2	8.1	2.3
9003	0.7	-2.2	-7	9.1	9.8	6.9	2.1
QUASI-PEAK							
10836	-3	-5.4	-9.8	8.8	5.8	3.4	-1
12642	-3.5	-8.7	-8.8	8.7	5.2	0	-0.1
14448	-3.7	-9.3	-9.9	8.6	4.9	-0.7	-1.3
16254	-4.3	-5.2	-6	8.5	4.2	3.3	2.5
18060	-6.7	-7.6	-8.9	8.4	1.7	0.8	-0.5
Peak							
1822	46.3	32.3	20	9.9	56.2	42.2	29.9
3644	12.7	8.1	6.8	9.9	22.6	18	16.7
5466	8.1	5.6	4.1	9.5	17.6	15.1	13.6
7288	7.1	3	0.6	9.3	16.4	12.3	9.9
9110	6.3	2	1.5	9.1	15.4	11.1	10.6
10932	3.8	0.1	-0.6	8.8	12.6	8.9	8.2

COMPLIANCE ENGINEERING SERVICES, INC. CCS DOCUMENT NO:CCSUP4020B
1366 BORDEAUX DRIVE, SUNNYVALE, CA 94089, USA TEL:(408)752-8166 FAX:(408)752-8168
This report shall not be reproduced except in full, without the written approval of CCS.

12754	2.4	-1.5	-0.5	8.7	11.1	7.2	8.2
14576	2.9	-0.6	-1.1	8.6	11.5	8	7.5
16398	3	-1.9	-1.8	8.5	11.5	6.6	6.7
18220	1.5	-1.1	-1	8.4	9.9	7.3	7.4
Average							
1822	43.6	31	18.1	9.9	53.5	40.9	28
3644	8.5	2.6	-1.2	9.9	18.4	12.5	8.7
5466	3	0.8	-5	9.5	12.5	10.3	4.5
7288	1	-1.1	-6.8	9.3	10.3	8.2	2.5
9110	0.8	-2	-7	9.1	9.9	7.1	2.1
QUASI-PEAK							
10932	-3	-5.8	-9.6	8.8	5.8	3	-0.8
12754	-3.8	-9	-9	8.7	4.9	-0.3	-0.3
14576	-3.9	-9.4	-10.1	8.6	4.7	-0.8	-1.5
16398	-5	-5	-9	8.5	3.5	3.5	-0.5
18220	-6.8	-7.2	-8.8	8.4	1.6	1.2	-0.4

Results from extrapolation:
1822KHz @ 30meters=5dBuV/m limit=23dBuV/m margin=-18dB AVG
10932KHz @ 30meters=-7dBuV/m limit=29.5 margin=-36.5 QP

COMPLIANCE ENGINEERING SERVICES, INC. CCS DOCUMENT NO:CCSUP4020B
1366 BORDEAUX DRIVE, SUNNYVALE, CA 94089, USA TEL:(408)752-8166 FAX:(408)752-8168
This report shall not be reproduced except in full, without the written approval of CCS.

K+E SEMI-LOGARITHMIC 5 CYCLES X 70 DIVISIONS
KEUFFEL & ESSER CO. MADE IN U.S.A.

46 6210

(meters) BASE STATION 1822KHz

10932KHz
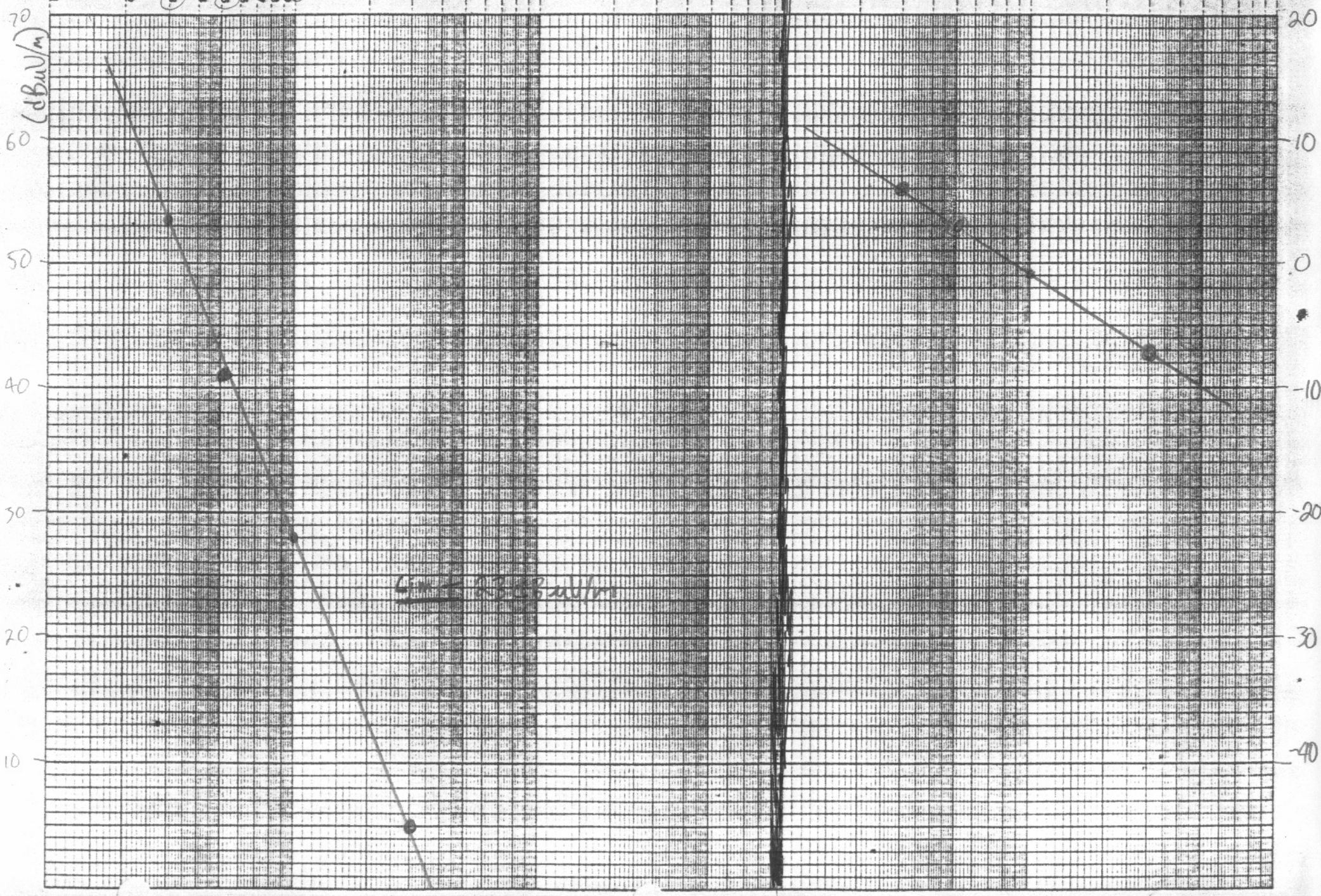
limit 29.5dBuV