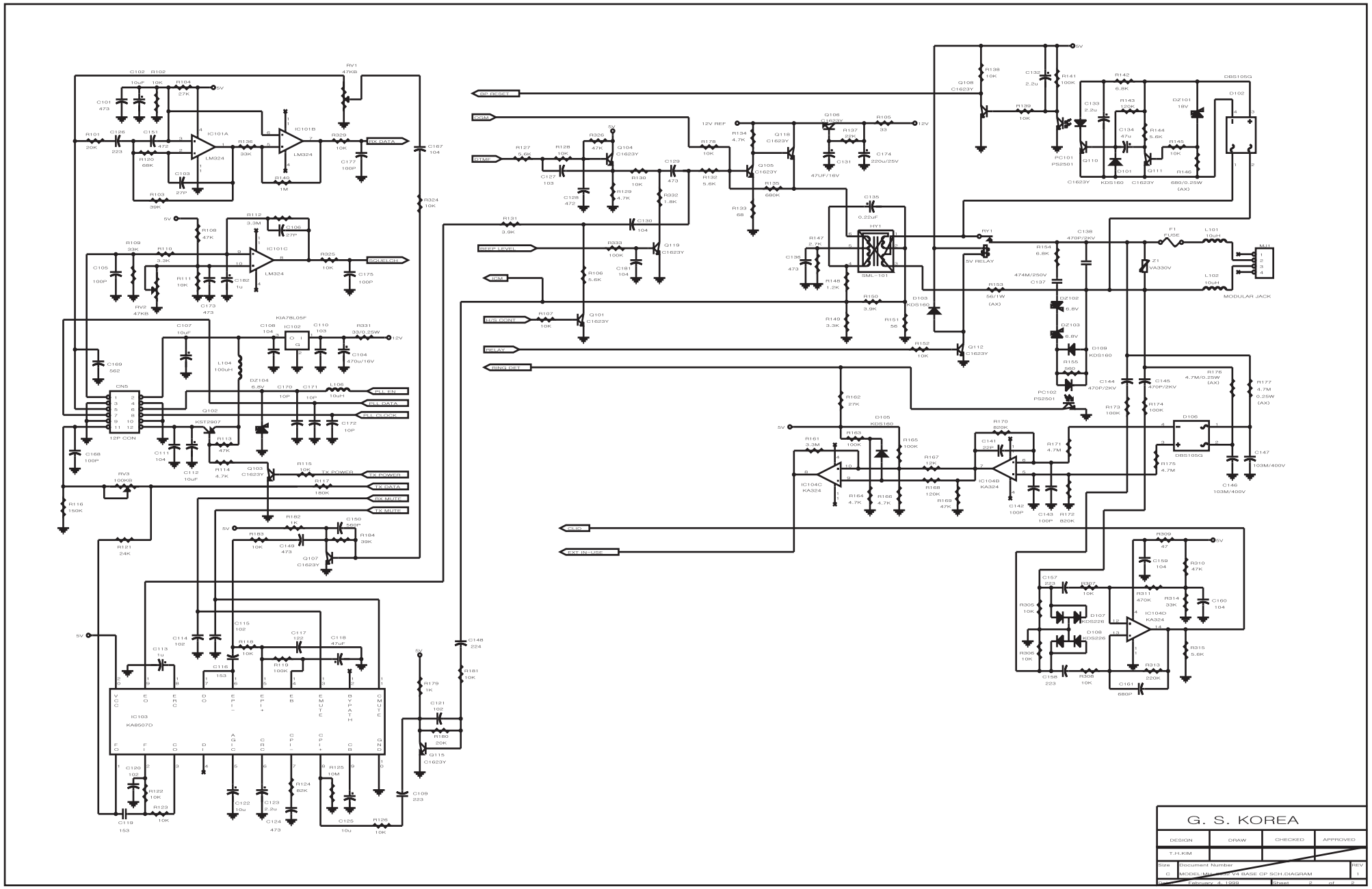
RX DATA
SQUELCH
PLL EN
PLL DATA
PLL CLOCK
TX POWER
TX DATA
RX MUTE
TX MUTE
RP RESET
COM
DTMF
REEF LEVEL
ICM
HOOK
RELAY
RING DET
FLIP
EXT IN-USE
MODULAR JACK
5V RELAY
12P CON
IC101A
IC101B
IC101C
LM324
IC102
KIA78L05F
IC103
KA8507D
IC104A
IC104B
IC104C
IC104D
KA324
HY1
SML-101
PC101
PS2501
PC102
PS2501
DBS105G
KDS160
KDS226
KSTS907
G. S. KOREA
DESIGN
DRAW
CHECKED
APPROVED
T.H.KIM
Size
Document Number
REV
C
MODEL:MR-[illegible]V4 BASE CIP SCH.DIAGRAM
1
Date
February, 4, 1999
Sheet
2
of
2

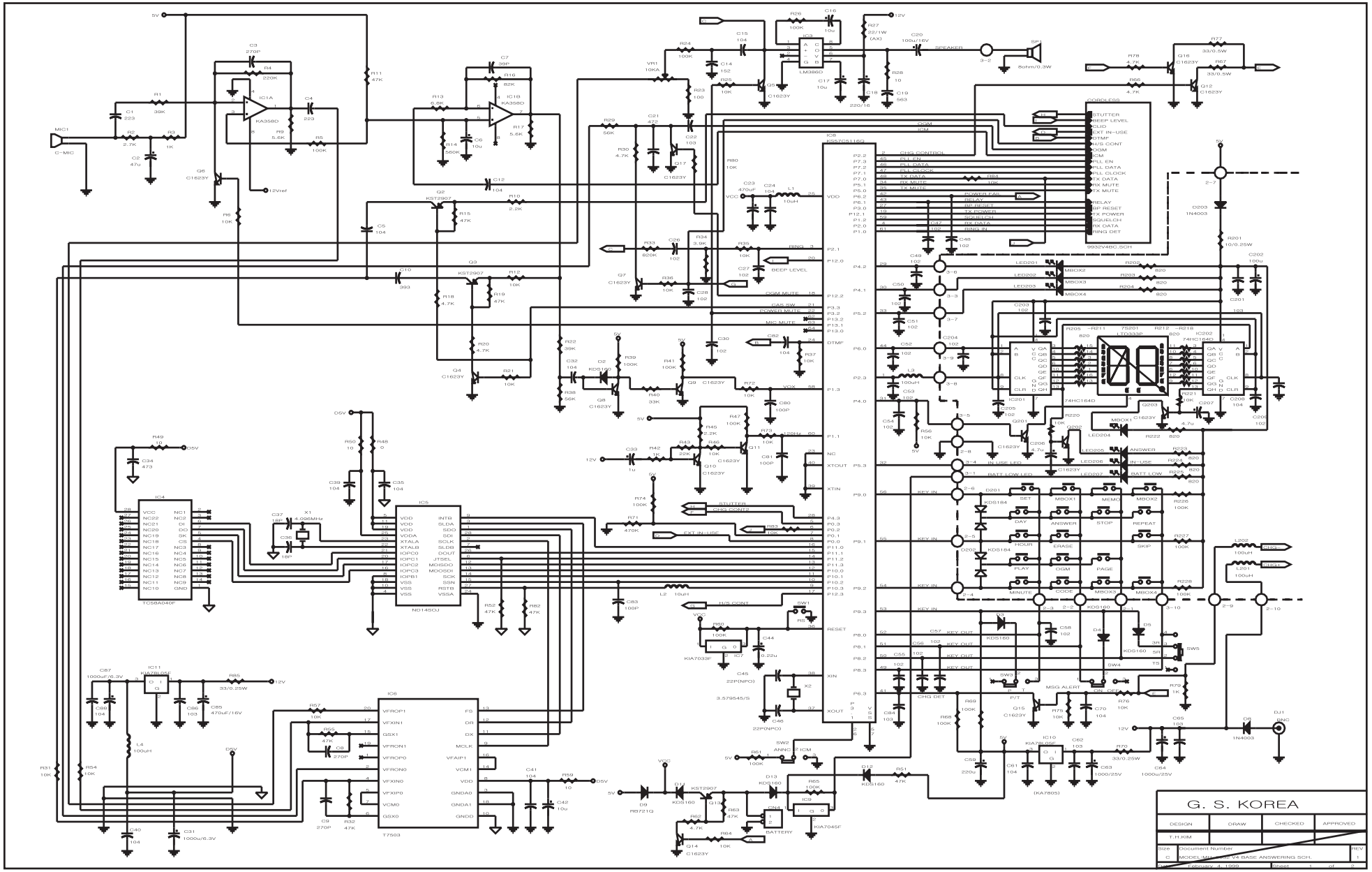
G. S. KOREA
DESIGN
DRAW
CHECKED
APPROVED
T.H.KIM
Size
C
Document Number
MODEL:MR-2000 V4 BASE ANSWERING SCH.
REV
1
Date
February 4, 1999
Sheet
1
of
2

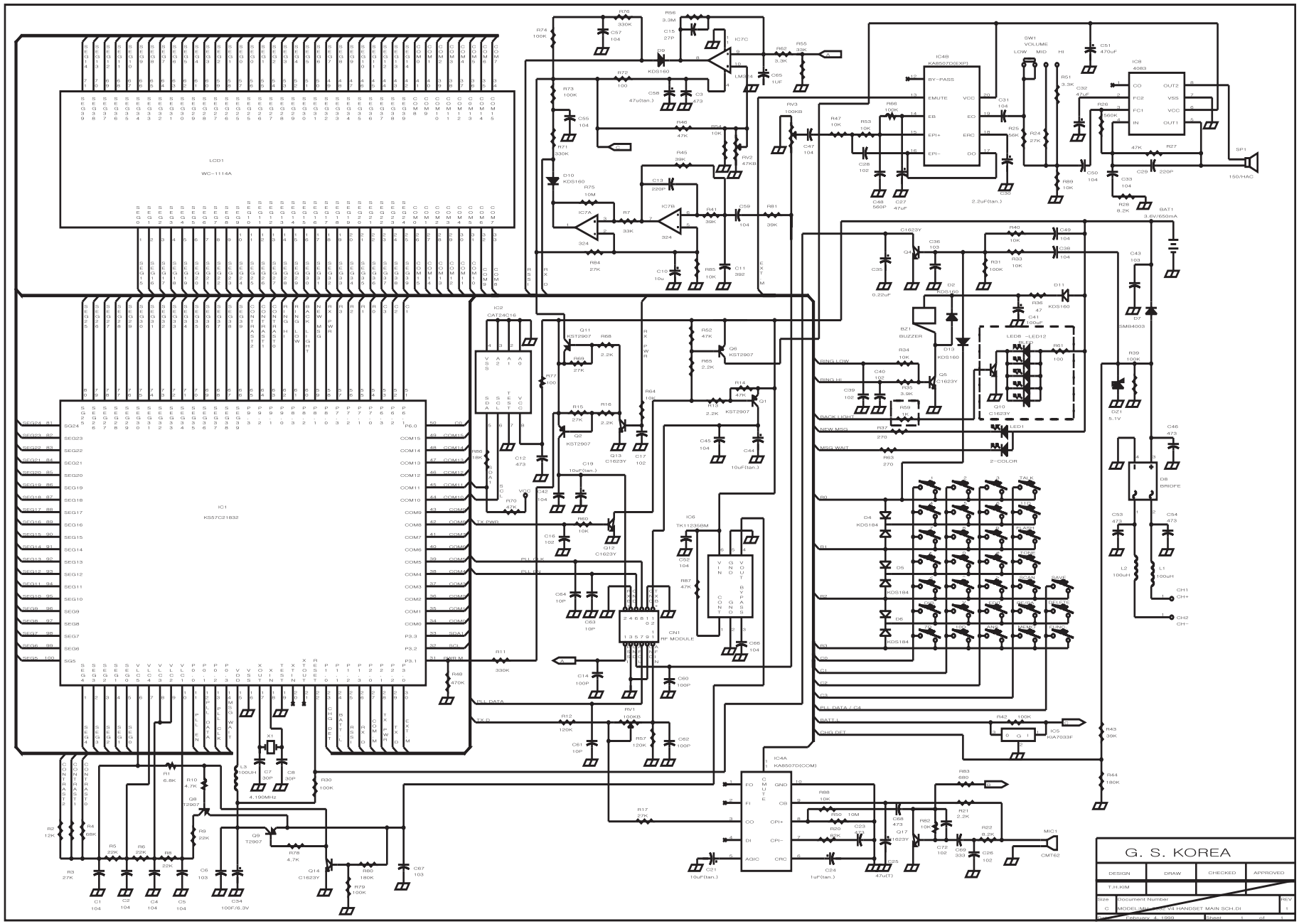
LCD1
WC-1114A
IC1
KS57C21832
IC2
CAT24C16
IC4A
KA8507D(COM)
IC4B
KA8507D(EXP)
IC6
TK11235BM
CN1
RF MODULE
IC5
KA7033F
IC8
4093
SW1
VOLUME
LOW MID HI
SP1
150/HAC
BAT1
3.6V/550mA
MIC1
CMT62
BZ1
BUZZER
D8
BRIDGE
X1
4.190MHz
RING LOW
RING HI
BACK LIGHT
NEW MSG
MSG WAIT
BATT-L
CHG DET
PLL DATA / C4
PLL DATA
PLL CLK
PLL EN
TX PWR
TX D
RX PWR
RX D
RX CLK
TALK
SAVE
G. S. KOREA
DESIGN
DRAW
CHECKED
APPROVED
T.H.KIM
Size
Document Number
REV
C
MODEL NAME : V4 HANDSET MAIN SCH.DI
1
Date : February, 4, 1999
Sheet 1 of 1