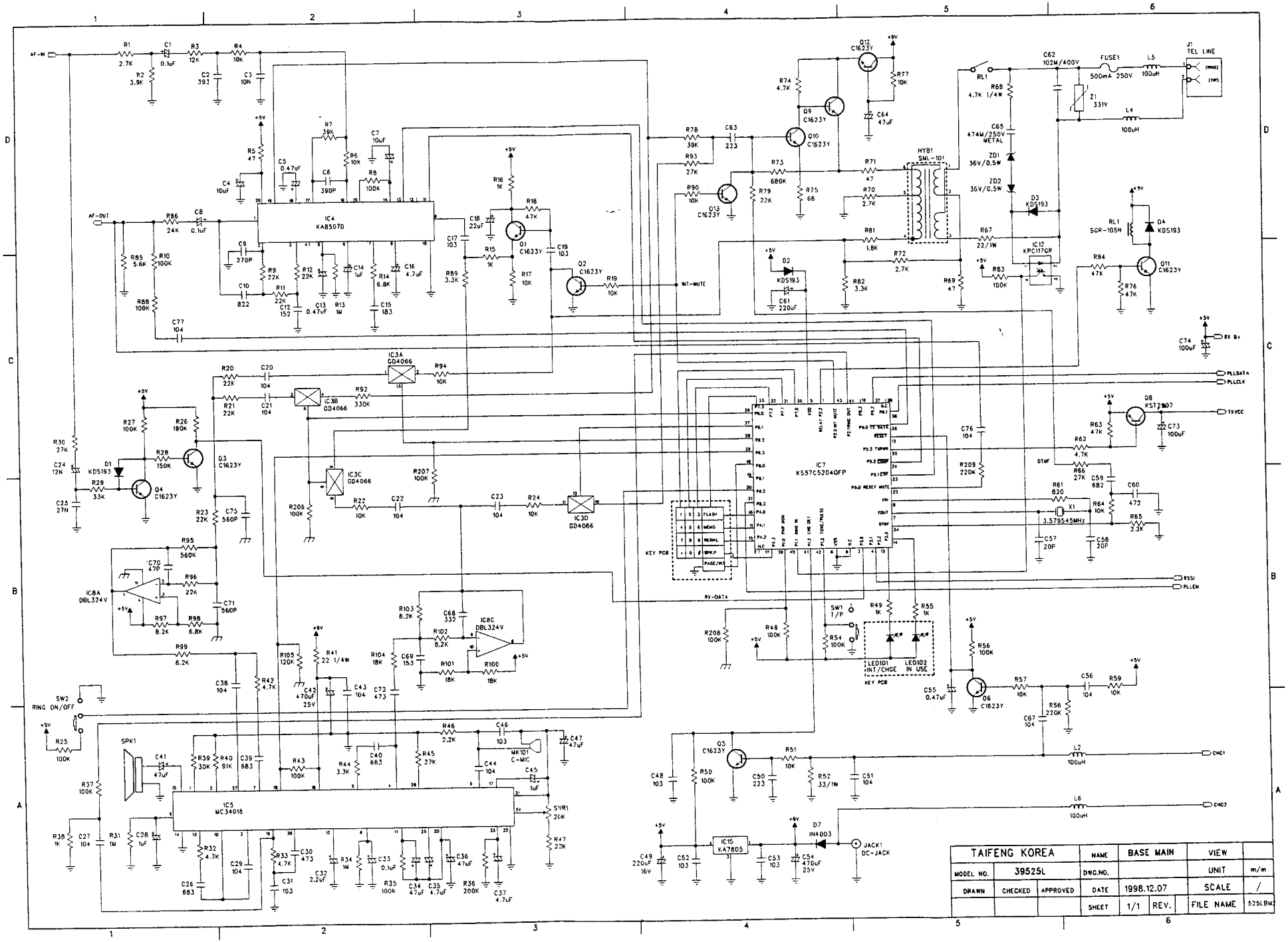

TAIFENG KOREA			NAME	BASE MAIN	VIEW	
MODEL NO.	39525L		DWG.NO.		UNIT	m/m
DRAWN	CHECKED	APPROVED	DATE	1998.12.07	SCALE	/
			SHEET	1/1 REV.	FILE NAME	525LBM2

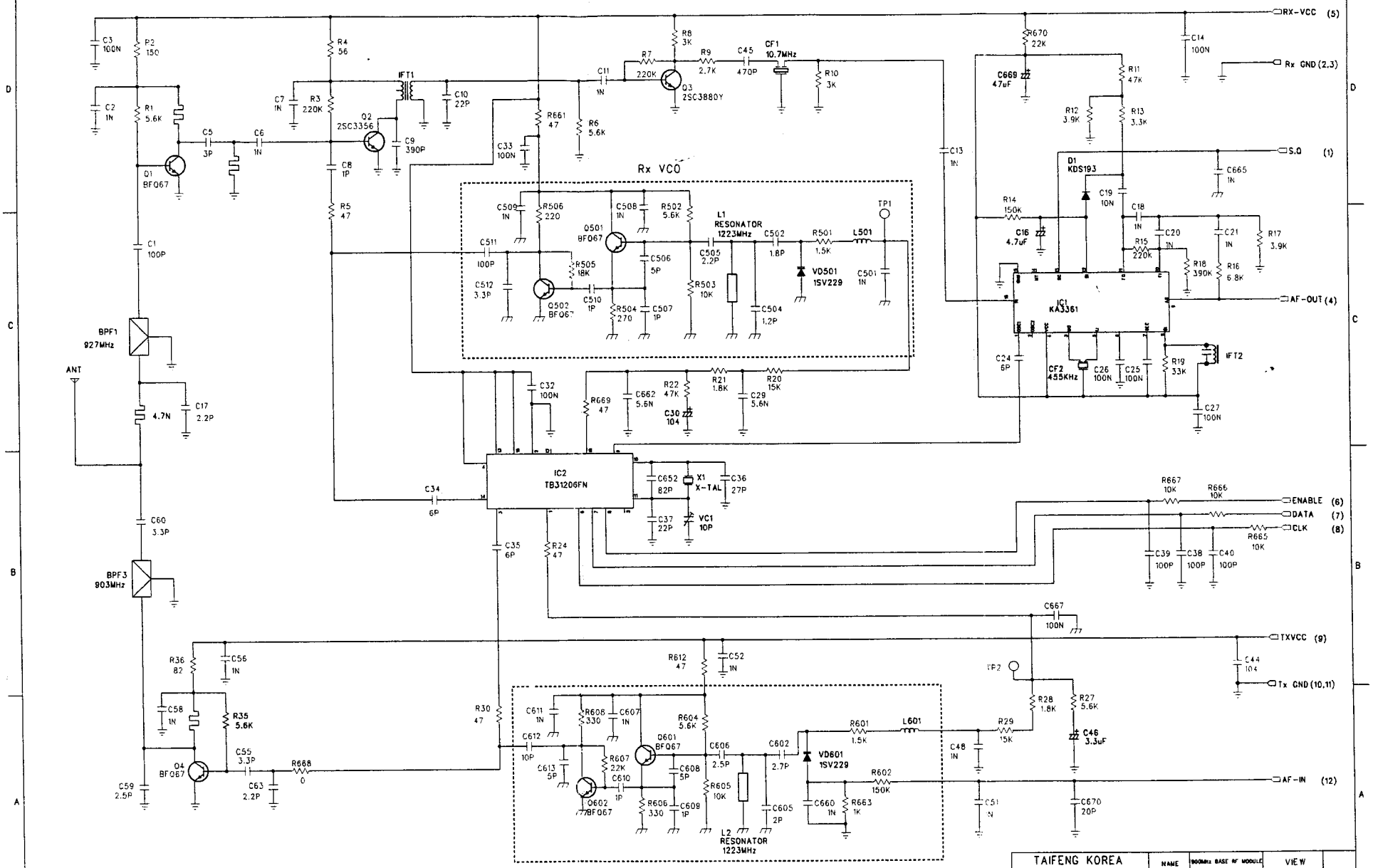

TAIFENG KOREA			NAME	900MHz BASE RF MODULE	VIEW	
MODEL NO.	39525L/39610L		DWG.NO.		UNIT	m/m
DRAWN	CHECKED	APPROVED	DATE	1998.12.07	SCALE	/
			SHEET	1/1 REV.	FILE NAME	8160LBRF1

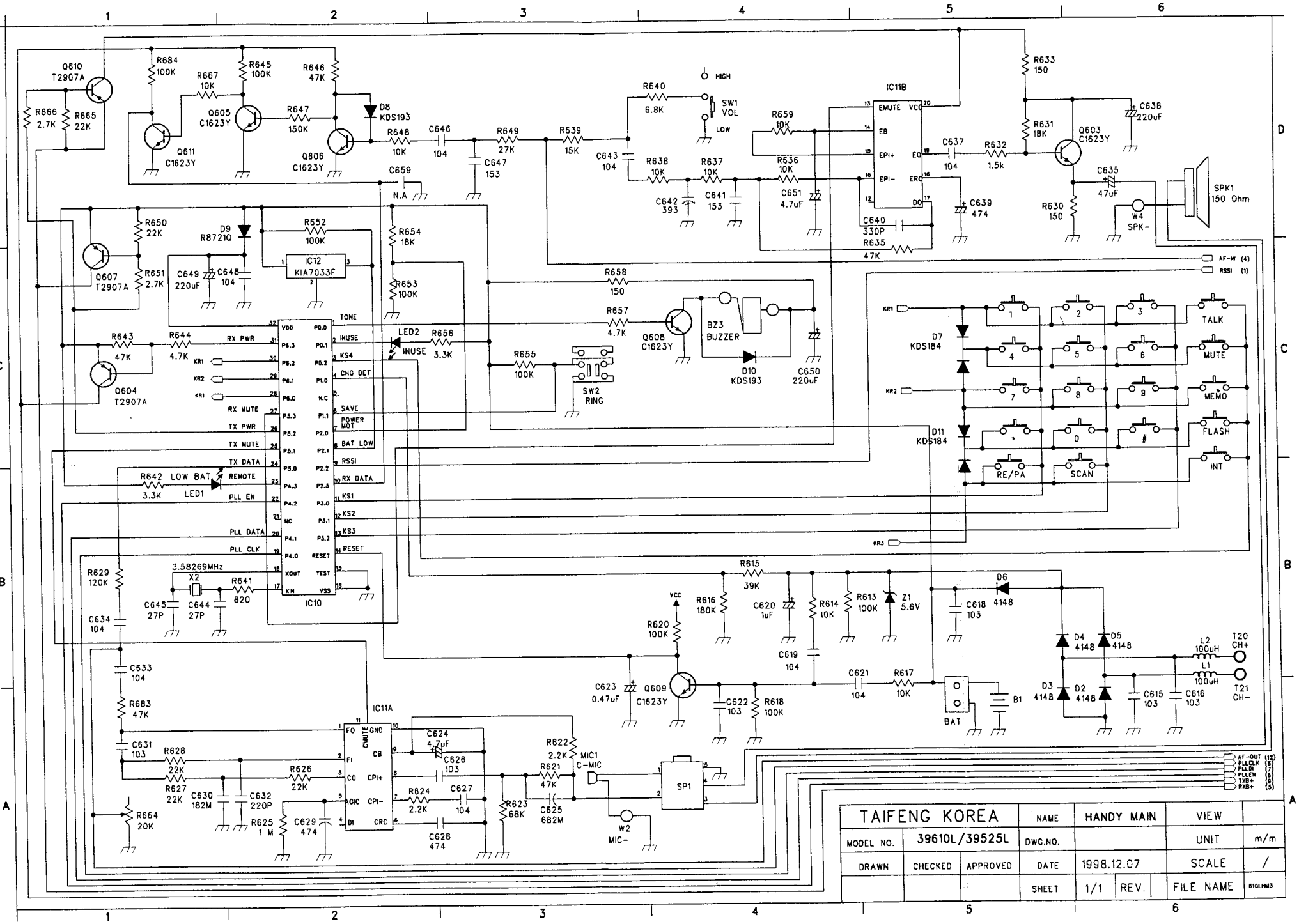

TAIFENG KOREA			NAME	HANDY MAIN		VIEW	
MODEL NO.	39610L/39525L		DWG.NO.			UNIT	m/m
DRAWN	CHECKED	APPROVED	DATE	1998.12.07		SCALE	/
			SHEET	1/1	REV.	FILE NAME	8TOLHM3

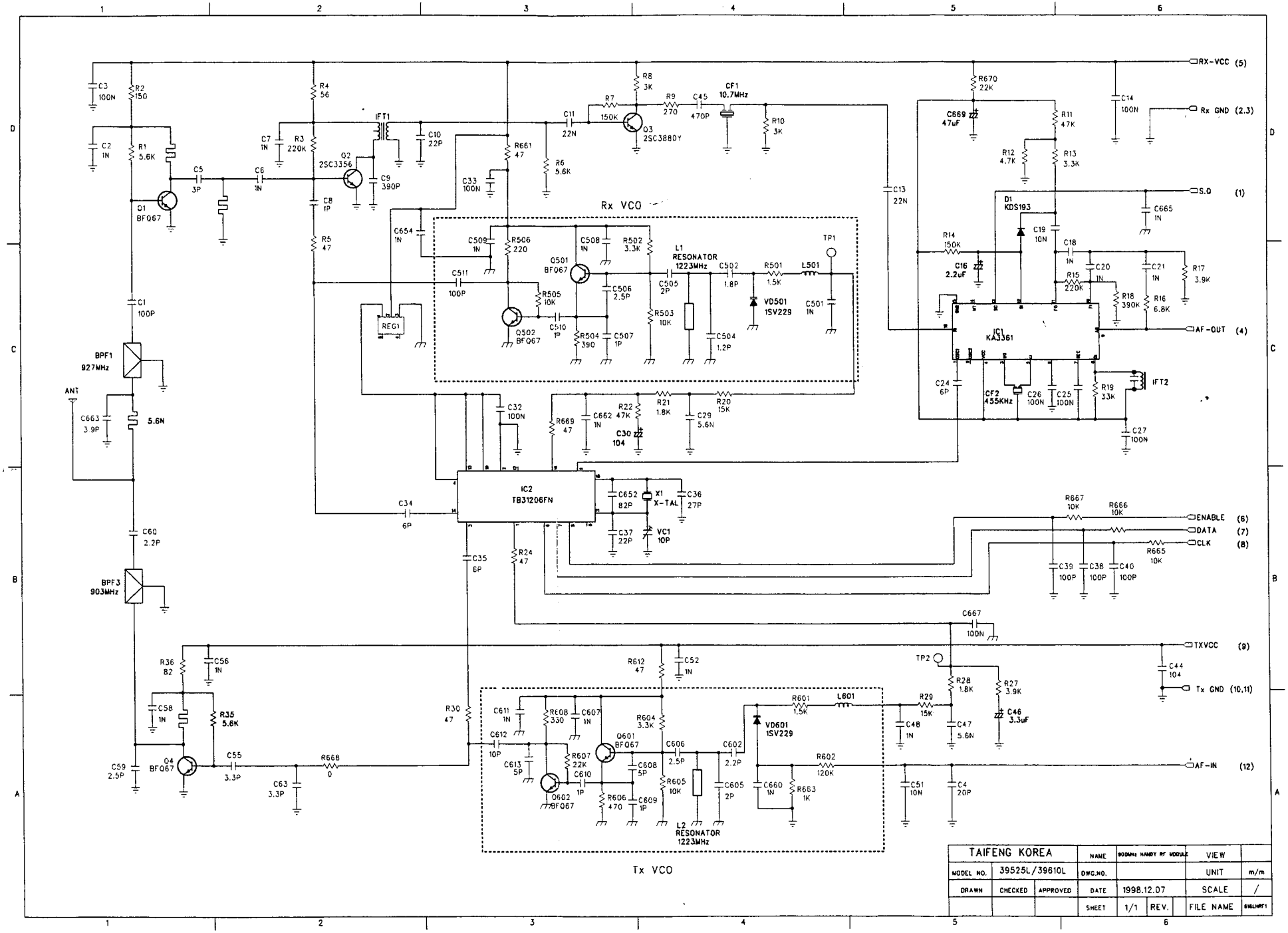
RX-VCC (5)
Rx GND (2.3)
S.Q (1)
AF-OUT (4)
ENABLE (6)
DATA (7)
CLK (8)
TXVCC (9)
Tx GND (10,11)
AF-IN (12)
ANT
BPF1 927MHz
BPF3 903MHz
Rx VCO
Tx VCO
IC1 KA3361
IC2 TB31206FN
REG1
L1 RESONATOR 1223MHz
L2 RESONATOR 1223MHz
CF1 10.7MHz
CF2 455KHz
IFT1
IFT2
D1 KDS193
X1 X-TAL
TP1
TP2
TAIFENG KOREA
NAME
900MHz HANDY RF MODULE
VIEW
MODEL NO.
39525L/39610L
DWG.NO.
UNIT
m/m
DRAWN
CHECKED
APPROVED
DATE
1998.12.07
SCALE
/
SHEET
1/1
REV.
FILE NAME