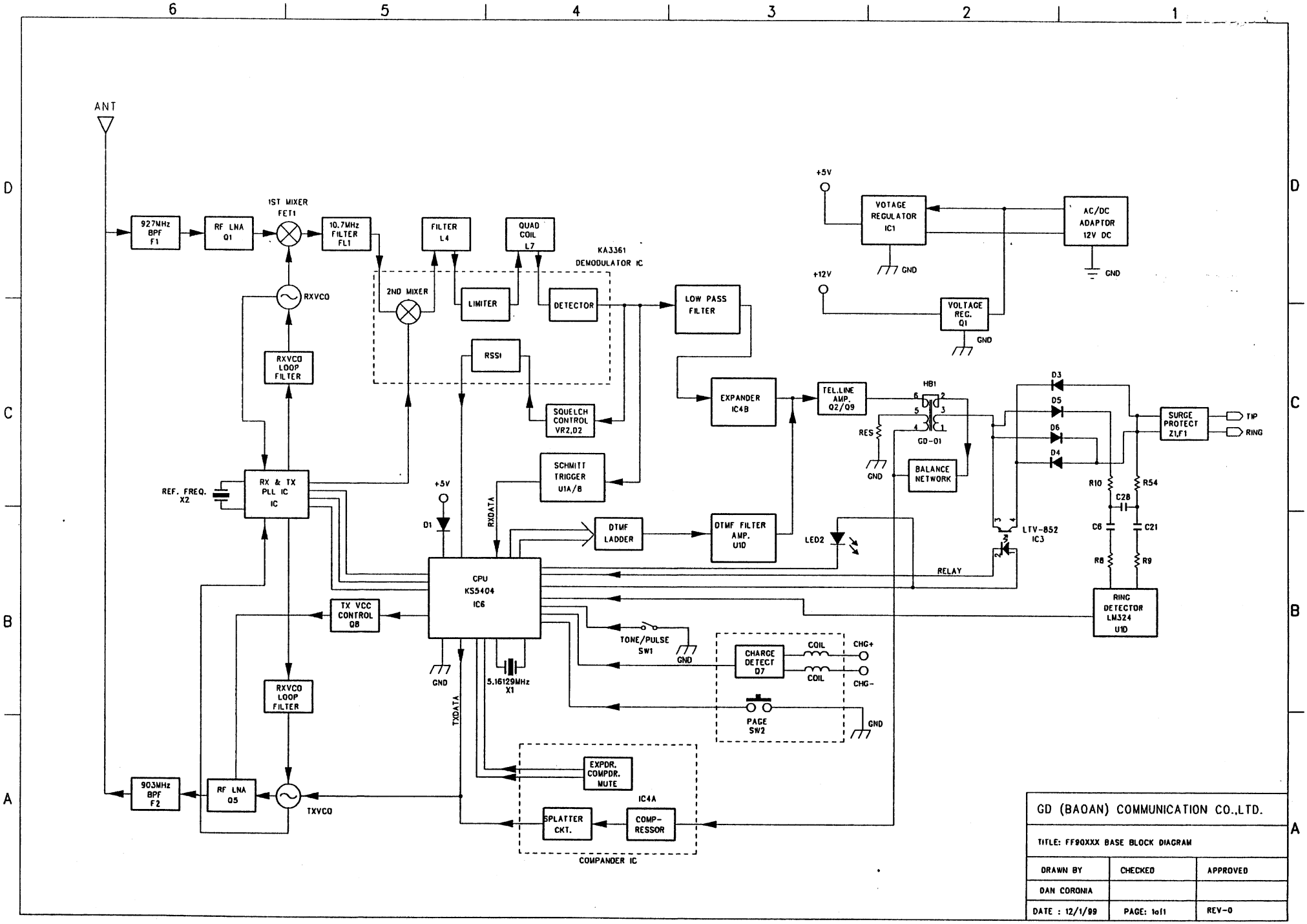

GD (BAOAN) COMMUNICATION CO.,LTD.		
TITLE: FF90XXX BASE BLOCK DIAGRAM		
DRAWN BY	CHECKED	APPROVED
DAN CORONIA		
DATE : 12/1/99	PAGE: 1of1	REV-0

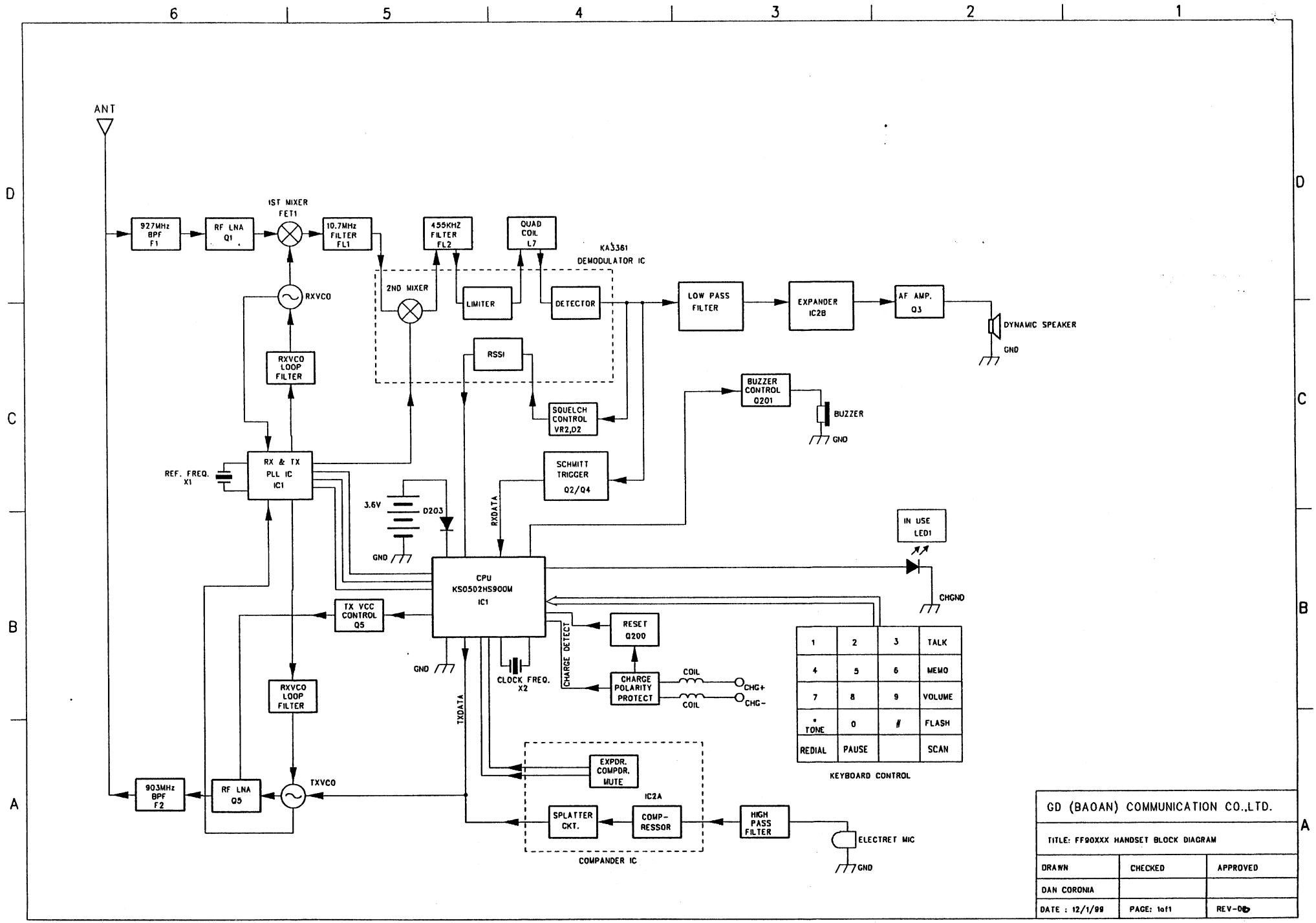
ANT
927MHz BPF F1
RF LNA Q1
1ST MIXER FET1
10.7MHz FILTER FL1
455KHZ FILTER FL2
QUAD COIL L7
KA3361 DEMODULATOR IC
2ND MIXER
LIMITER
DETECTOR
LOW PASS FILTER
EXPANDER IC2B
AF AMP. Q3
DYNAMIC SPEAKER
GND
RXVCO
RXVCO LOOP FILTER
RSSI
SQUELCH CONTROL VR2,D2
BUZZER CONTROL Q201
BUZZER
GND
REF. FREQ. X1
RX & TX PLL IC IC1
SCHMITT TRIGGER Q2/Q4
3.6V
D203
GND
RXDATA
IN USE LED1
CPU KS0502HS900M IC1
CHGND
TX VCC CONTROL Q5
RESET Q200
CHARGE DETECT
GND
CLOCK FREQ. X2
CHARGE POLARITY PROTECT
COIL
COIL
CHG+
CHG-
RXVCO LOOP FILTER
TXDATA
1 2 3 TALK
4 5 6 MEMO
7 8 9 VOLUME
* TONE 0 # FLASH
REDIAL PAUSE SCAN
KEYBOARD CONTROL
EXPDR. COMPDR. MUTE
IC2A
903MHz BPF F2
RF LNA Q5
TXVCO
SPLATTER CKT.
COMP-RESSOR
HIGH PASS FILTER
ELECTRET MIC
GND
COMPANDER IC
GD (BAOAN) COMMUNICATION CO.,LTD.
TITLE: FF90XXX HANDSET BLOCK DIAGRAM
DRAWN
CHECKED
APPROVED
DAN CORONIA
DATE : 12/1/99
PAGE: 1of1
REV-D