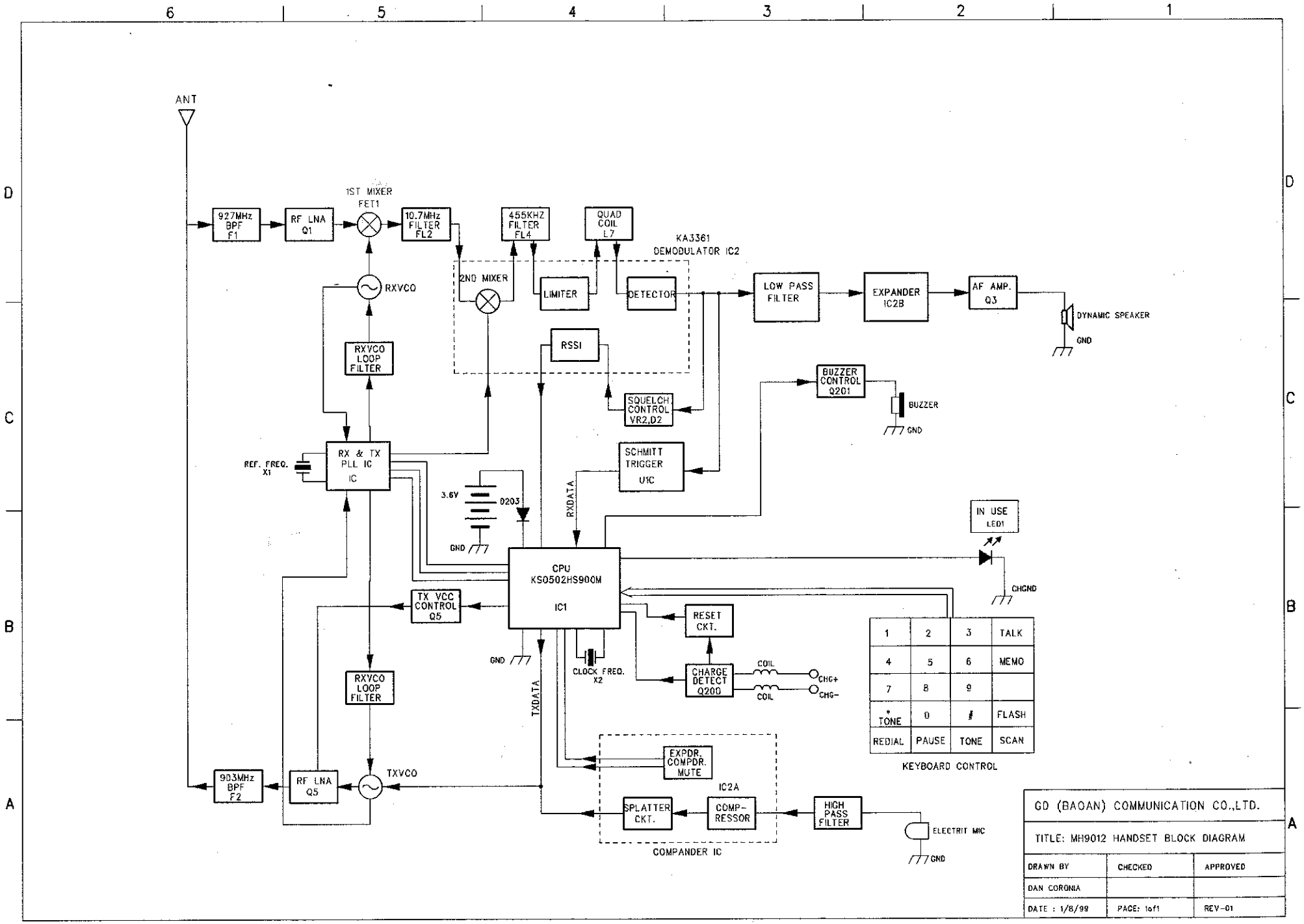

GD (BAOAN) COMMUNICATION CO.,LTD.		
TITLE: MH9012 HANDSET BLOCK DIAGRAM		
DRAWN BY	CHECKED	APPROVED
DAN CORONIA		
DATE : 1/8/99	PAGE: 1of1	REV-01

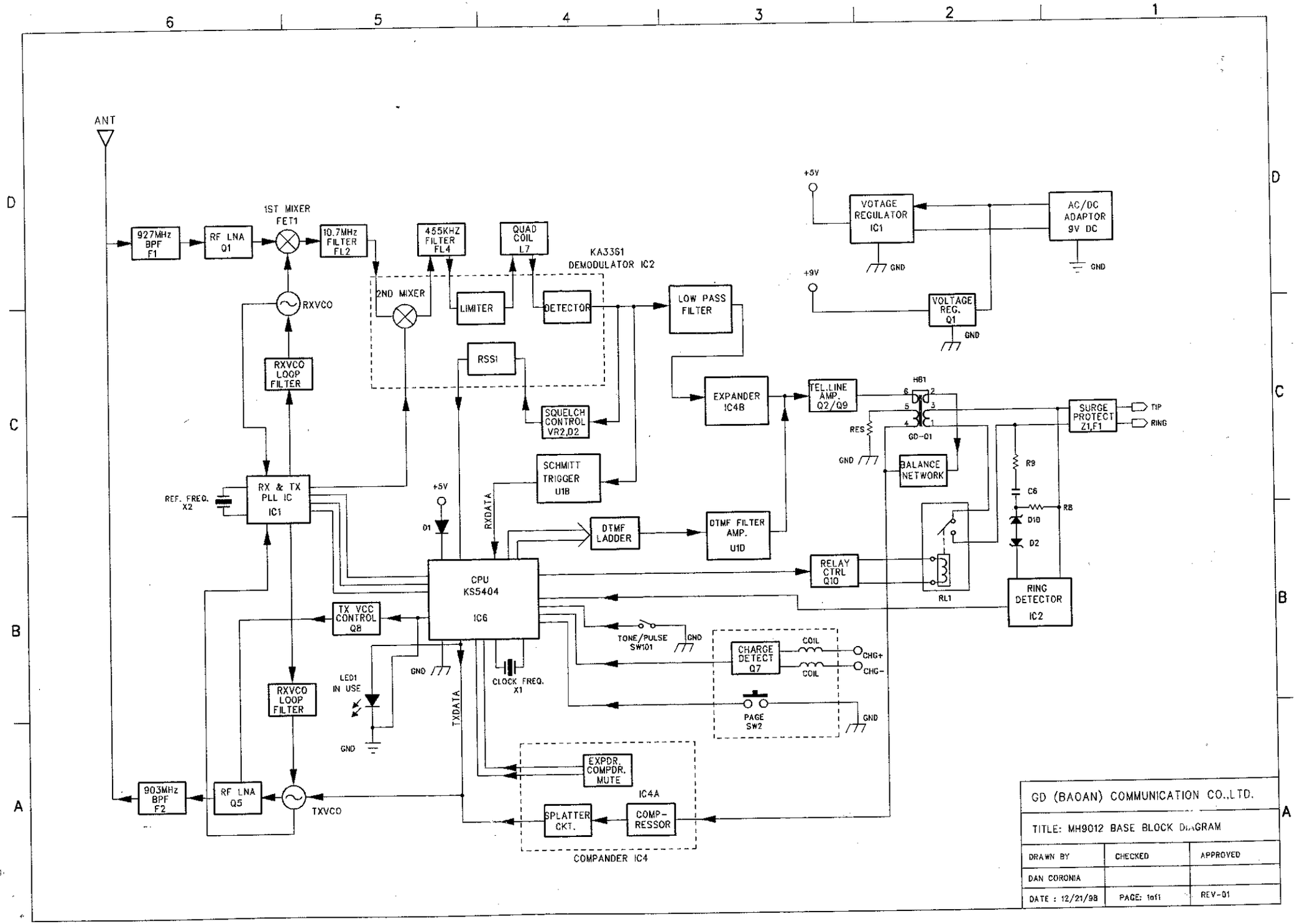

GD (BAOAN) COMMUNICATION CO.,LTD.		
TITLE: MH9012 BASE BLOCK DIAGRAM		
DRAWN BY	CHECKED	APPROVED
DAN CORONIA		
DATE : 12/21/98	PAGE: 1of1	REV-01