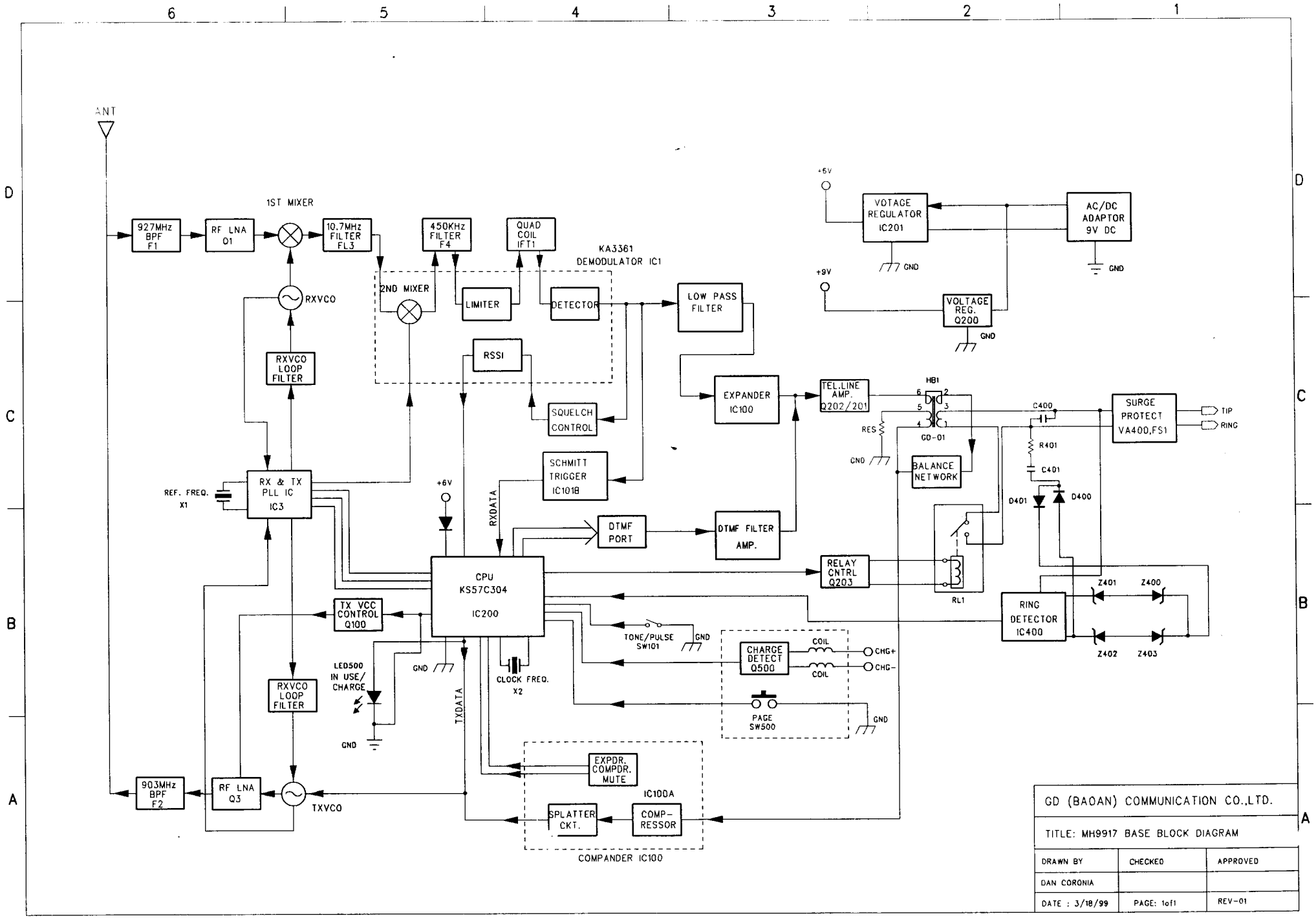

GD (BAOAN) COMMUNICATION CO.,LTD.		
TITLE: MH9917 BASE BLOCK DIAGRAM		
DRAWN BY	CHECKED	APPROVED
DAN CORONIA		
DATE : 3/18/99	PAGE: 1of1	REV-01

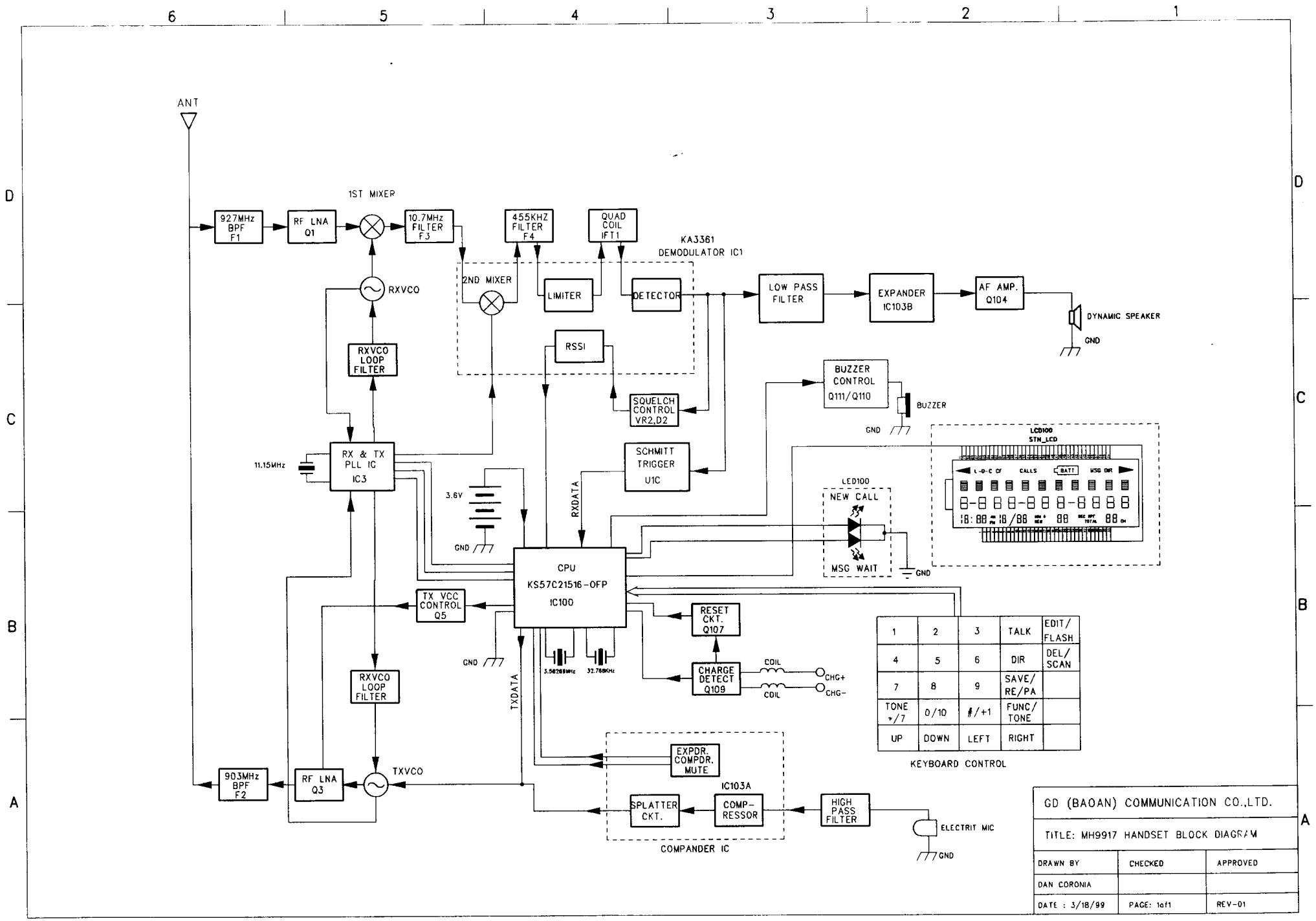

1	2	3	TALK	EDIT/ FLASH
4	5	6	DIR	DEL/ SCAN
7	8	9	SAVE/ RE/PA	
TONE */7	0/10	#/+1	FUNC/ TONE	
UP	DOWN	LEFT	RIGHT	