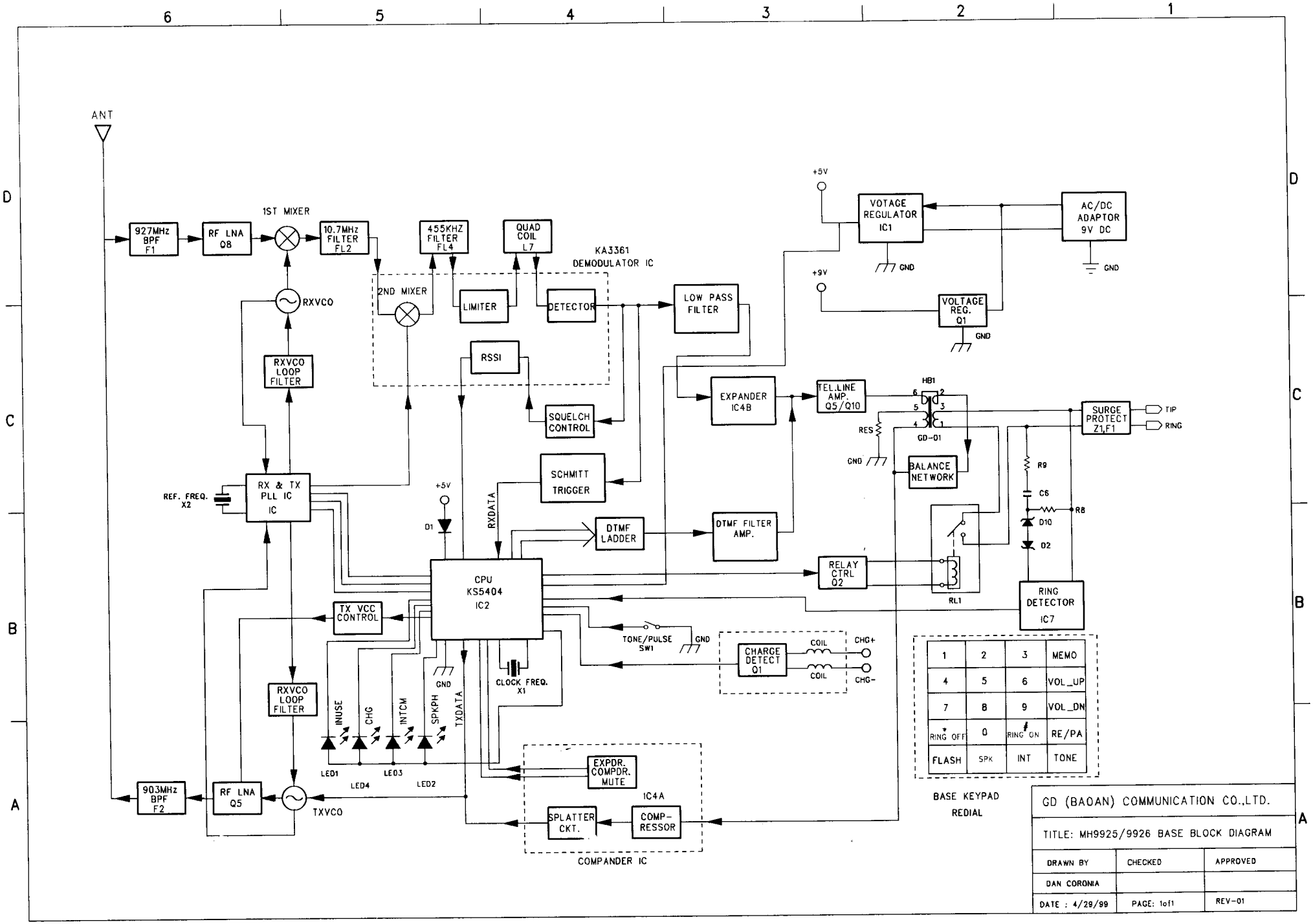
ANT
927MHz BPF F1
RF LNA Q8
1ST MIXER
10.7MHz FILTER FL2
455KHZ FILTER FL4
QUAD COIL L7
KA3361 DEMODULATOR IC
2ND MIXER
LIMITER
DETECTOR
LOW PASS FILTER
RXVCO
RXVCO LOOP FILTER
RSSI
SQUELCH CONTROL
SCHMITT TRIGGER
REF. FREQ. X2
RX & TX PLL IC IC
+5V
D1
RXDATA
DTMF LADDER
DTMF FILTER AMP.
CPU KS5404 IC2
TX VCC CONTROL
TONE/PULSE SW1
GND
CHARGE DETECT Q1
COIL
CHG+
CHG-
CLOCK FREQ. X1
INUSE
CHG
INTCM
SPKPH
TXDATA
LED1
LED4
LED3
LED2
EXPDR. COMPDR. MUTE
IC4A
SPLATTER CKT.
COMP-RESSOR
COMPANDER IC
903MHz BPF F2
RF LNA Q5
TXVCO
+5V
VOTAGE REGULATOR IC1
AC/DC ADAPTOR 9V DC
+9V
VOLTAGE REG. Q1
EXPANDER IC4B
TEL.LINE AMP. Q5/Q10
HB1
GD-01
RES
BALANCE NETWORK
SURGE PROTECT Z1,F1
TIP
RING
R9
C6
R8
D10
D2
RELAY CTRL Q2
RL1
RING DETECTOR IC7
1 2 3 MEMO
4 5 6 VOL_UP
7 8 9 VOL_DN
RING OFF 0 RING ON RE/PA
FLASH SPK INT TONE
BASE KEYPAD
REDIAL
GD (BAOAN) COMMUNICATION CO.,LTD.
TITLE: MH9925/9926 BASE BLOCK DIAGRAM
DRAWN BY
CHECKED
APPROVED
DAN CORONIA
DATE : 4/29/99
PAGE: 1of1
REV-01

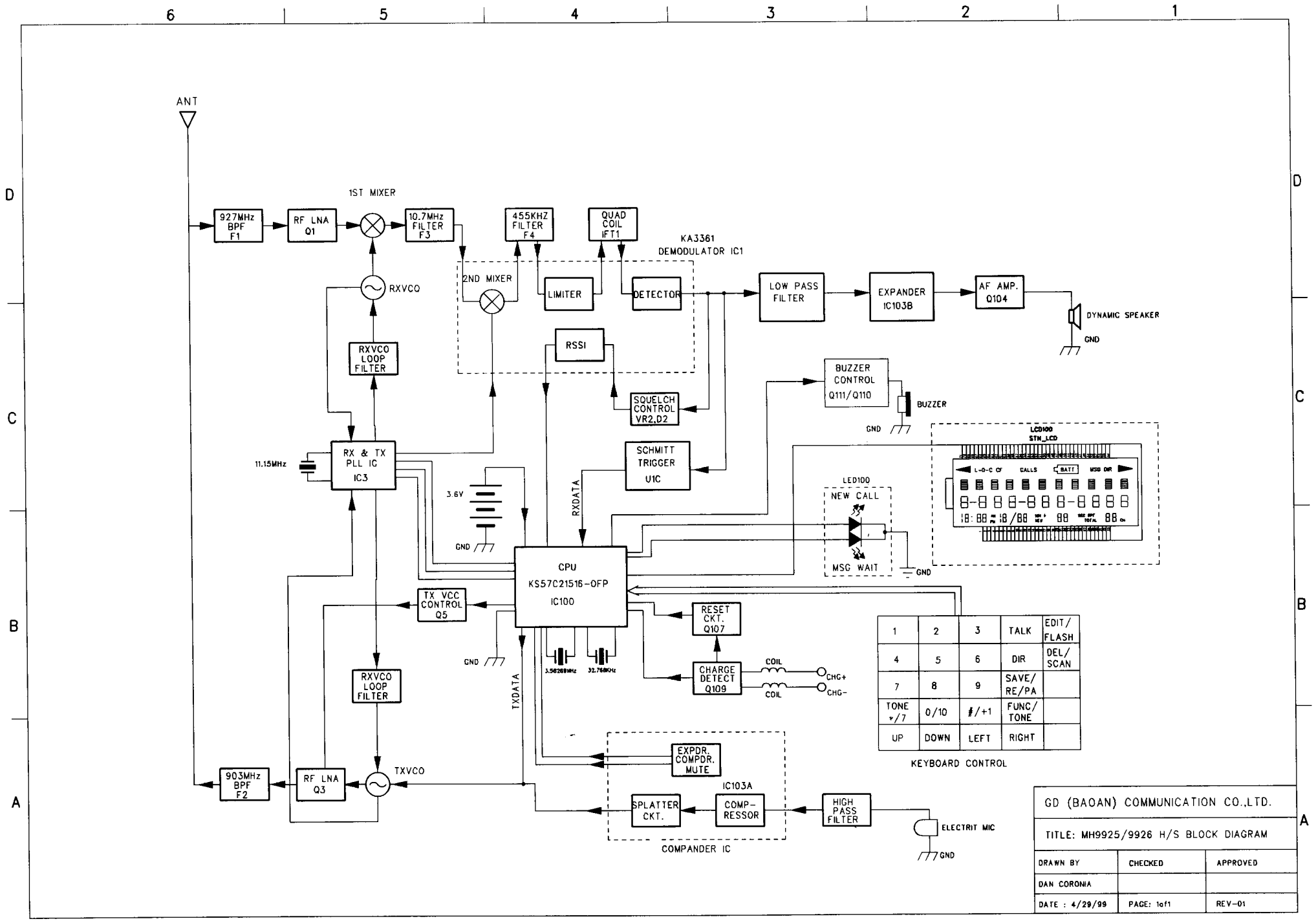
ANT
1ST MIXER
927MHz BPF F1
RF LNA Q1
10.7MHz FILTER F3
455KHZ FILTER F4
QUAD COIL IFT1
KA3361 DEMODULATOR IC1
2ND MIXER
LIMITER
DETECTOR
LOW PASS FILTER
EXPANDER IC103B
AF AMP. Q104
DYNAMIC SPEAKER
GND
RXVCO
RSSI
RXVCO LOOP FILTER
BUZZER CONTROL Q111/Q110
BUZZER
SQUELCH CONTROL VR2,D2
11.15MHz
RX & TX PLL IC IC3
SCHMITT TRIGGER U1C
3.6V
RXDATA
LCD100 STN_LCD
LED100
NEW CALL
MSG WAIT
CPU KS57C21516-OFP IC100
TX VCC CONTROL Q5
RESET CKT. Q107
3.58268MHz
32.768KHz
CHARGE DETECT Q109
COIL
CHG+
CHG-
TXDATA
RXVCO LOOP FILTER
EXPDR. COMPDR. MUTE
IC103A
903MHz BPF F2
RF LNA Q3
TXVCO
SPLATTER CKT.
COMP-RESSOR
HIGH PASS FILTER
ELECTRIT MIC
COMPANDER IC
KEYBOARD CONTROL
GD (BAOAN) COMMUNICATION CO.,LTD.
TITLE: MH9925/9926 H/S BLOCK DIAGRAM
DRAWN BY
CHECKED
APPROVED
DAN CORONIA
DATE : 4/29/99
PAGE: 1of1
REV-01