PDF created with pdfFactory Pro trial version www.pdffactory.com

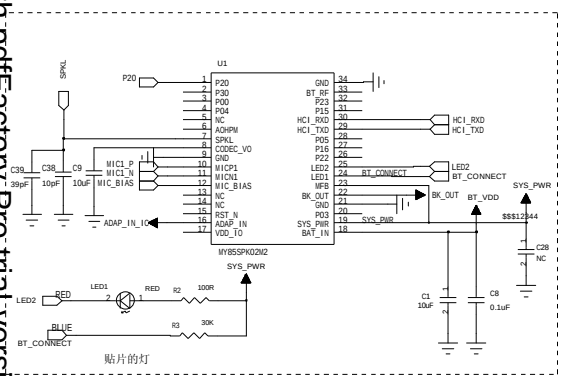

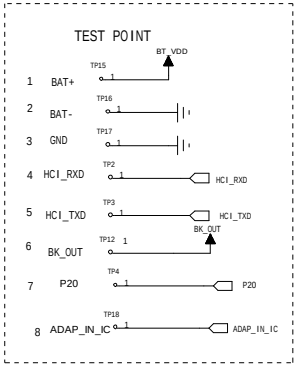

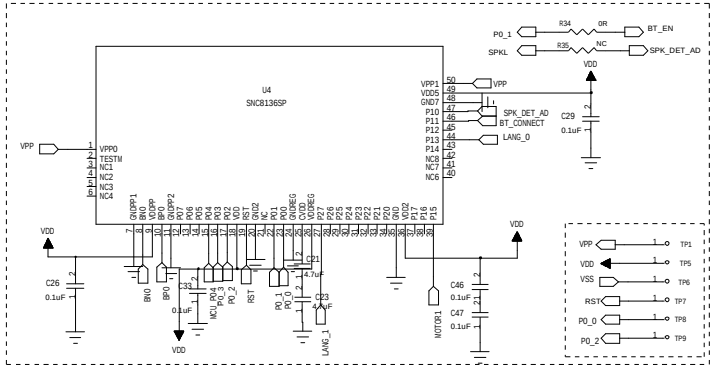

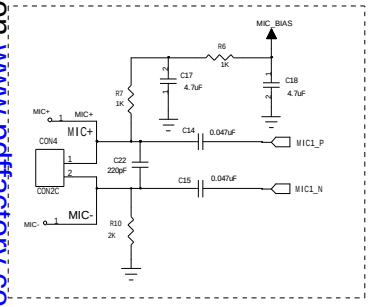

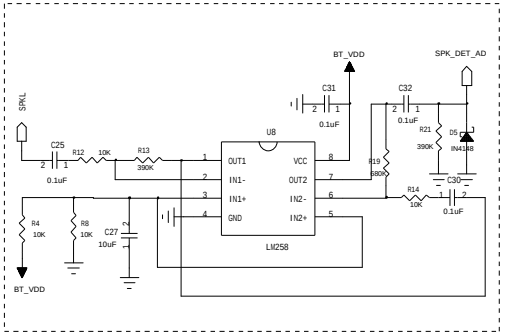

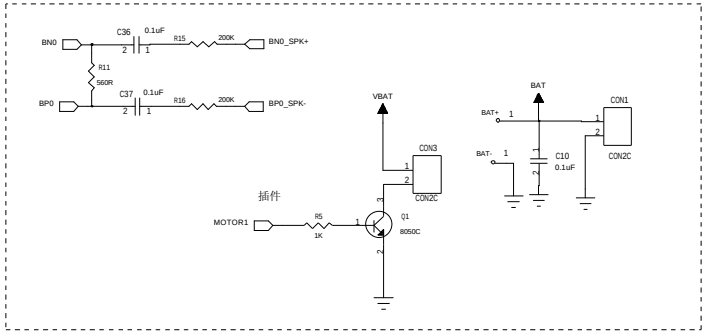

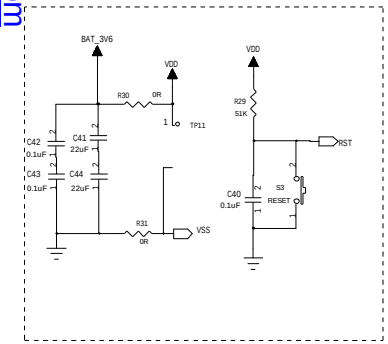

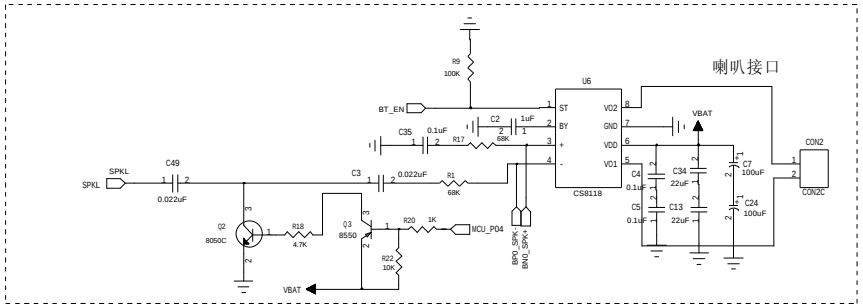

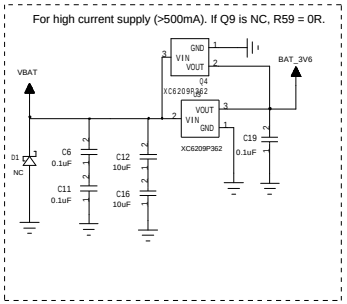

P0-0对应的P20 P0-2对应的P21

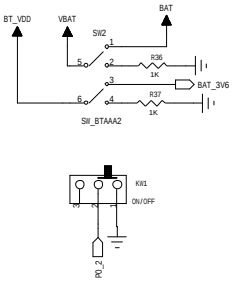

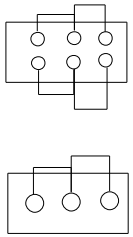

P02喇叭音质开关，音质选择

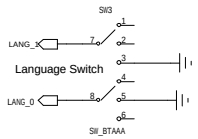

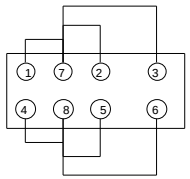

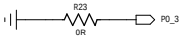

P03滚球开关 插件的
P03滚球开关，做起来短路起作用

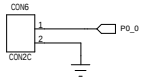

P00调音质质量
肚仔按键

Bluetooth Portion

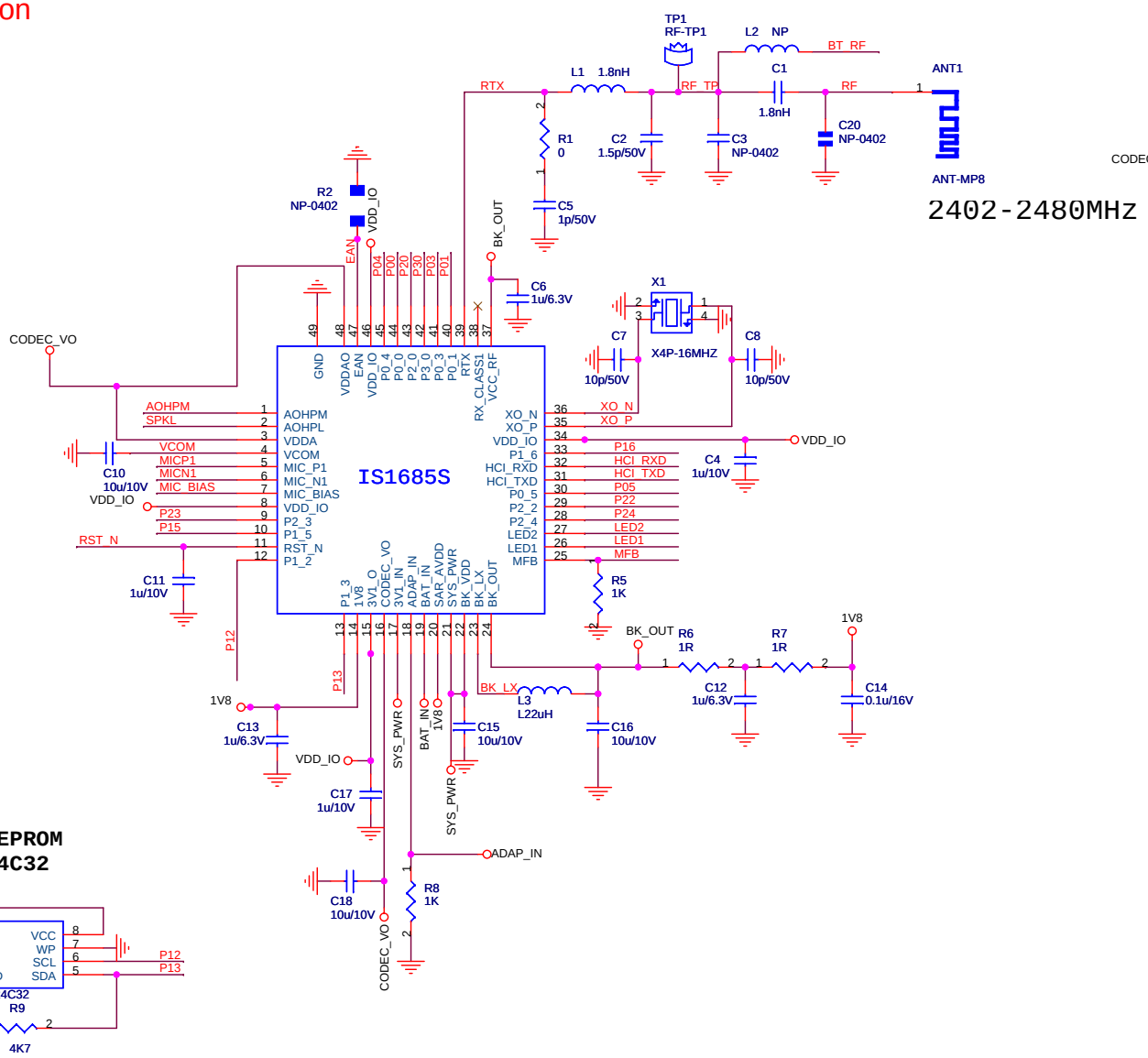

2402-2480MHz

PIN DEFINATION

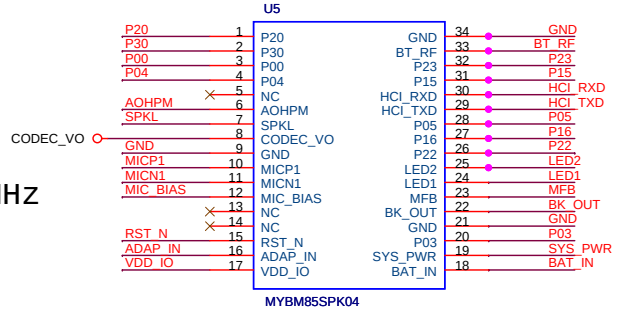

EEPROM 24C32

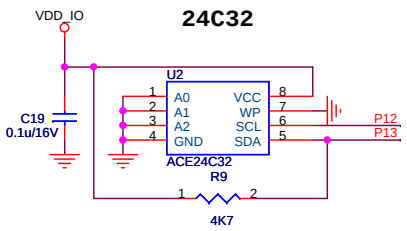

GPIO Description

P00	Slide Switch Detect/TX_IND
P03	RX_IND
P04	NFC
P05	Play/Pause
P15	VOL-
P16	Audio AMP Enable
P20	System Configuration
P23	VO+

MYLAND

Title: Rm.3,3/F.,Block B,Tonic Ind.Centre,19 Lam Hing Street, Kowloon Bay,Kowloon,Hong Kong. Hong Kong:Tel :852-23312212 Hong Kong:Fax: 852-27573135 China:Fax:86-755-26690667

Size: B | Document Number: YAYA MYBM85SPK02 | Rev: REV1.0

Date: Saturday, September 29, 2012 | Sheet 1 of 1