DATA SHEET

2W SDARS ECHO Repeater

SER-2300-2W-EC

- Boosts SXM Signal Near WCS Sites
- Adjustable Gain to +93 dB
- 2W High Power Output
- High Linearity
- Good Reverse Isolation
- High reliability
- ALC Protection
- Mounting Bracket accommodates mounting of optional WCS/SXM Diplexer

Overview

The CCI SDARS ECHO Dual Band Repeater is an RF-only SXM terrestrial repeater. It operates by receiving a signal from an existing SXM terrestrial repeater (DRU) in the intended coverage area, typically on a rooftop or tower, then filtering, amplifying and transmitting it to provide a much higher level signal at ground level for SXM users. The low band terrestrial channel is defined as 2326.25 MHz, ± 2.006 MHz. The high band terrestrial channel is defined as 2338.755 MHz, ± 2.53 MHz.

The transmit signal power is automatically limited to 2 Watts average power at the antenna to prevent self oscillation. The ECHO Repeater is designed to operate within donor transmitter (DRU) receive signal levels from -40 dBm to -80 dBm at the antenna.

The Echo repeater has been designed with a spectral mask that meets FCC guidelines at nominal operating power. This results in the most efficient implementation of waveform shaping, amplifier operating point, output back-off, linearization, and output RF filtering.

Warning

This is NOT a CONSUMER device. It is designed for installation by FCC LICENSEES and QUALIFIED INSTALLERS. You MUST have an FCC LICENSE or express consent of an FCC Licensee to operate this device. Unauthorized use may result in significant forfeiture penalties, including penalties in excess of $100,000 for each continuing violation.

Maintain a minimum separation distance from the Transmit Antenna to a person(s) of at least 60 cm. The qualified installer and/or end user of this RF device must control the exposure conditions to a minimum separation distance between the Transmit Antenna and any bystanders in order to ensure RF Exposure compliance.

© 2018 CCI All rights reserved. Specifications are subject to change.

2W SDARS ECHO Repeater

SER-2300-2W-EC

SPECIFICATIONS

Electrical

RF Parameters	Specification (Sirius Band)	Specification (XM Band)
Frequency Range	2326.25 MHz ±2.006 MHz	2338.755 MHz ±2.53 MHz
Max. Amplifier Gain	93 dB Typ.	93 dB Typ.
Gain Flatness*	±3.0 dB	±3.0 dB
Manual Gain Control		
Attenuation Range	30 dB	30 dB
Step Size	1.0 dB	1.0 dB
Max. Composite Output Power	+33 dBm	
Peak-to-Average	6 dB @ 0.1% CCDF	
Output Power Coupler Port	-40 dBc ±0.5 dB	
Automatic Level Control (ALC)		
Output Power Set Point	+33 dBm Typ.	
Attenuation Range	31 dB	
Step Size	0.5 dB	
ACPR		
2336.125 MHz/2336.725 MHz (HB)	24 dB Min.	
2341.385 MHz/2340.785 MHz (HB)	24 dB Min.	
2324.744 MHz/2324.144 MHz (LB)	24 dB Min.	
2327.756 MHz/2328.356 MHz (HB)	24 dB Min.	
In-Band/In-Channel Emissions (IBIC)	21 dB Min.	
In-Band/Out-of-Channel Emissions (IBOC)		
2337.490 MHz/2333.515 MHz (HB)	34 dB Min.	
2337.490 MHz/2335.255 MHz (HB)	30 dB Min.	
2340.020 MHz/2342.255 MHz (HB)	30 dB Min.	
2337.490 MHz/2343.995 MHz (HB)	41 dB Min	
2326.250 MHz/2322.138 MHz (LB)	35 dB Min.	
2326.250 MHz/2330.362 MHz (LB)	34 dB Min.	
Out-of-Band Emissions (OOBE)	≤ -90 dBW/MHz (≤ -75 dBW/MHz)**	
VSWR (Return Loss)	1.5:1 Max. (14 dB Min.)	
	*Relative to Input	
	** ≥ 2W EIRP w/ DPO-2323-Sx Diplexer (<2W EIRP w/o DPO-2323-Sx)	

General Characteristics	
Impedance	50 ohms
Operating Voltage	±48 VDC
Nominal Current at Rated Power	1A @ ±48 VDC
Monitoring and Alarm Interface	Dry Contact Relay

Environmental

Operating Temperature	-40˚C to +65˚C
Enclosure	NEMA 4X Weather Proof
MTBF	>500,000 hours

© 2018 CCI All rights reserved. Specifications are subject to change.

SPECIFICATIONS

2W SDARS ECHO Repeater

SER-2300-2W-EC

Mechanical

RF Connectors	3 x 4.3-10 female
DC Input Connector	Amphenol C091D Series 3 pin receptacle
Alarm Connector	Amphenol 4 pin C09131G100 Series
ECHO Repeater Monitoring System (ERMS) Connector	Amphenol 6 pin C09131G100 Series
Dimensions (w/Brackets)(H×W×D)	14.56 x 13.46 x 7.02 in. (369.8 x 341.9 x 178.3 mm)
Weight	20.75 lbs (9.45 kg)
Mounting	Included Mounting Bracket accommodates mounting of the optional WCS/SXM Diplexer; Pole Mount Kit Supplied for Utility Pole Installation

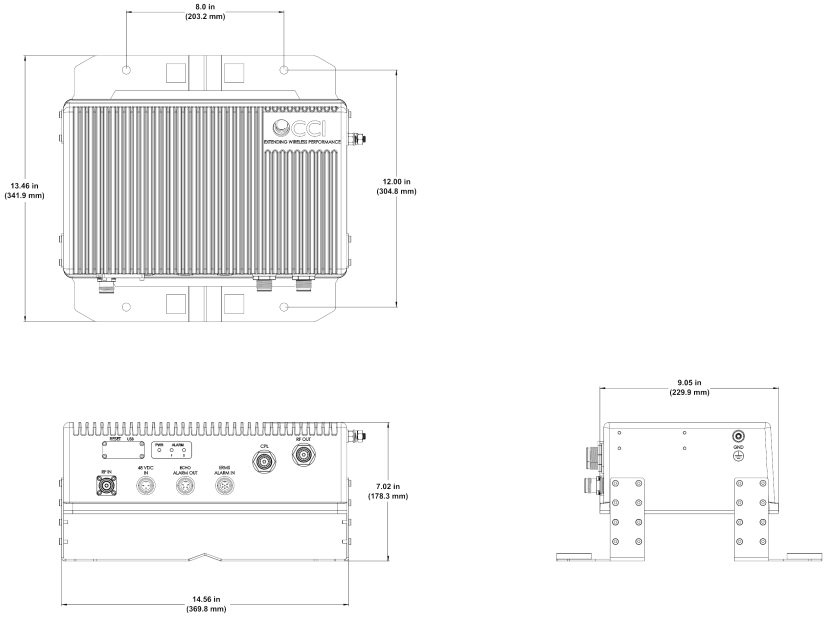

SER-2300-2W-EC Outline Drawing

© 2018 CCI All rights reserved. Specifications are subject to change.

Pin Number	Description
1	DC Return
2	-48VDC
3	Earth Ground

SER-2300-2W-EC 2W SDARS ECHO Repeater DC Input Connector Pinout

Pin Number	Description
1	Alarm 1 - ECHO Repeater (Normally Closed)
2	Alarm 1 Return
3	Alarm 2 - ERMS (Normally Closed)
4	Alarm 2 Return

SER-2300-2W-EC 2W SDARS ECHO Repeater Alarm Connector Pinout

Pin Number	Signal	Description
1	RS-232	ECHO Repeater to ERMS
2	RS-232	ERMS to ECHO Repeater
3	Shutdown +5V TTL	Used by ERMS to Turn Off Repeater
4	TTL Ground	Supplied by ERMS
5	+7 VDC	Supplied by ECHO Repeater to power ERMS
6	Common	Ground Supplied by ECHO Repeater

SER-2300-2W-EC 2W SDARS ECHO Repeater Monitoring System Connector Pinout

© 2018 CCI All rights reserved. Specifications are subject to change.

Block Diagram

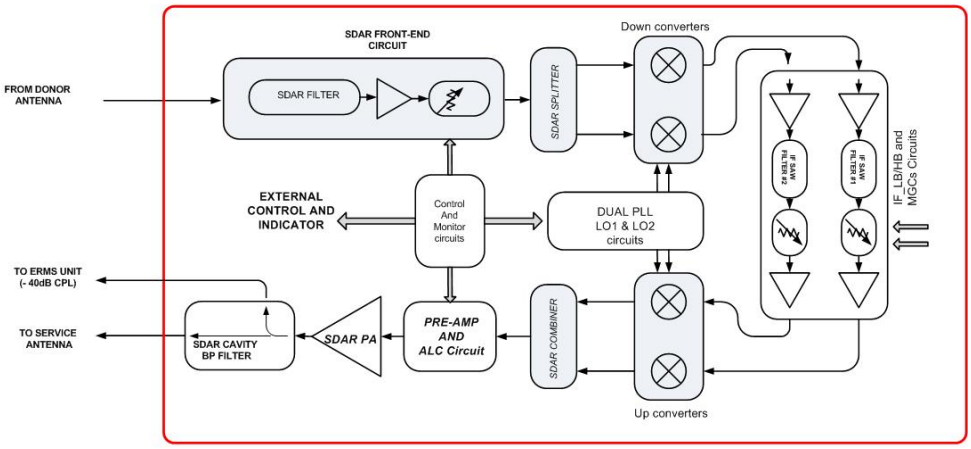

SER-2300-2W-EC Block Diagram

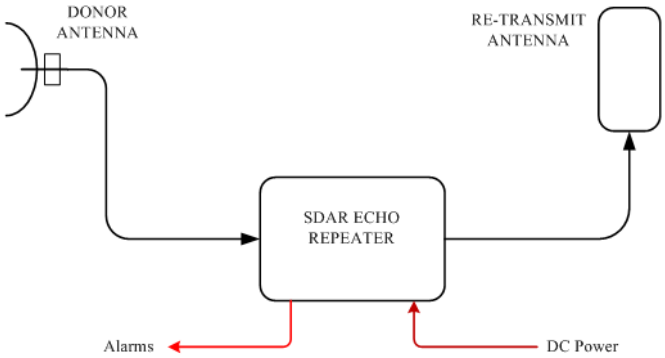

SER-2300-2W-EC Typical Application without WCS/SXM Diplexer Drawing

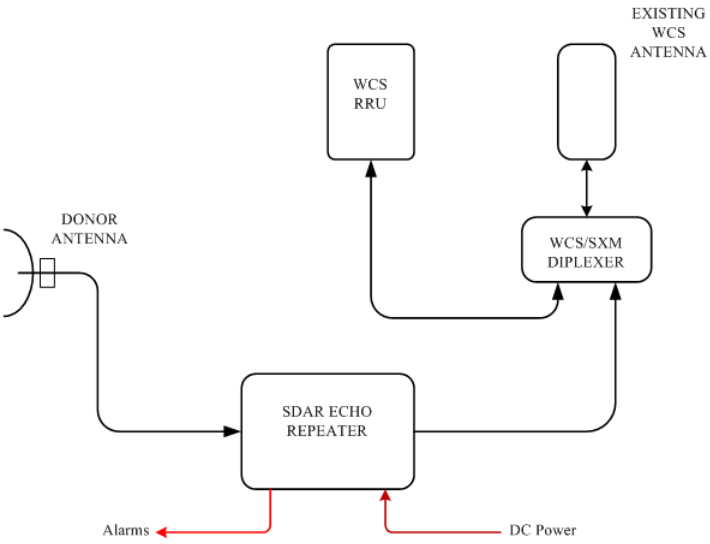

SER-2300-2W-EC Typical Application with WCS/SXM Diplexer Drawing

© 2018 CCI All rights reserved. Specifications are subject to change.

Parts & Accessories

SER-2300-2W-EC	2W SDARS ECHO Repeater (DC Powered) with 4.3-10 connectors; Included Mounting Bracket accommodates mounting of the optional WCS/SXM Diplexer)
ECHO-ERMS	ERMS Status Monitoring Module; includes ERMS Mounting Bracket
ANT-2300-PB-24-K	Donor Antenna (24 dB Gain Parabolic, 2300 MHz) with Mounting Hardware
DPO-2323-S2	WCS/SXM Outdoor Diplexer with DC/AISG on WCS Port and 4.3-10 connectors
SER-ALM	Alarm Cable Kit for ECHO Repeater
SER-PWR	DC Power Cables for ECHO Repeater
SER-RFCAB-20	RF Cable Kit for ECHO Repeater
SER-2PD-S2	2-Way Power Divider for Two Sector ECHO Repeater Kit
SER-3PD-S2	3-Way Power Divider for Three Sector ECHO Repeater Kit
SER-4PD-S2	4-Way Power Divider for Four Sector ECHO Repeater Kit

Standards & Compliance

Safety	EN 60950-1, UL 60950-1
Emission	EN 55022
Immunity	EN 55024
Environmental	IEC 60068-2-1, IEC 60068-2-2, IEC 60068-2-5, IEC 60068-2-6, IEC-60068-2-11, IEC 60068-2-14, IEC 60068-2-18, IEC 60068-2-27, IEC 60068-2-29, IEC 60068-02-30, IEC 60068-2-52, IEC 60068-2-64, IEC61000-4-5, GR-63-CORE 4.3.1, EN 60529 IP67, IP68

Certifications

Antenna Interface Standards Group (AISG), Federal Communication Commission (FCC) Part 15 Class B, Federal Communications Commission (FCC) Part 25*** CE, CSA US, ISO 9001:2008

*** ≥ 2W EIRP w/DPO-2323-Sx Diplexer, or < 2W EIRP w/o DPO-2323-Sx

© 2018 CCI All rights reserved. Specifications are subject to change.