Report No.	E1474219
Specifications Test Method	FCC Part 74 – Certification ANSI C63.4 1992
Applicant address	4F, No. 11, Lane 125, Sec. 1, Kuo Kwang Road Ta Li City, Taichung Hsien, Taiwan, R.O.C.
Applicant	E-J Electronics Co., Ltd.
Items tested Model No.	Wireless Microphone EJ-8LT, WT-480T (Sample # E14219)
Results Date	**Compliance** (As detailed within this report) 06/27/2001 (month / day / year) (Sample received) 06/06/2001 (month / day / year) (Test)
Prepared by	Project Engineer
Authorized by	General Manager (Frank Tsai)
Issue date	*June 16, 2001* (month / day / year)
Modifications	**None**
Tested by Office at Anechoic Chamber at	Training Research Co., Ltd. 2, Lane 194, Huan-Ho Street, Hsichih, Taipei Hsien 221, Taiwan 2, Lane 194, Huan-Ho Street, Hsichih, Taipei Hsien 221, Taiwan

Conditions of issue:

(1) This test report shall not be reproduced except in full, without written approval of TRC. And the test result contained within this report only relate to the sample submitted for testing.

(2) This report must not be used by the client to claim product endorsement by NVLAP or nay agency of U.S. Government.

★ ***FCC ID : NTMEJ8LT-WT480T***

Contents

Chapter 0 Application for Certification 4

Chapter 1 General

1.1 Introduction 5
1.2 Description of Support Equipment 5
1.3 Configuration of System Under Test 6
1.4 Location of the Measurement Site 7
1.5 General Test Condition 7
1.6 Conducted Emission Test 8
1.7 Conducted Emission Test Result 10
1.8 Radiated Emission Test 11
1.9 Radiated Emission Test Result 13

Chapter 2 Power Output Measurement

2.1 Rules and Specification Limits 15
2.2 Measurement Condition and Setup 15
2.3 List of Measurement Instrument 16
2.4 Measurement Configuration 17
2.5 Measurement Result 18

Chapter 3 Modulation Characteristics Measurement

3.1 Rules and Specification Limits 21
3.2 Test Configuration & List of Test Instruments 21
3.3 Frequency Response of Audio Low Pass Filter Measurement Condition & Setup 22
3.4 Modulation Limiting Measurement Condition & Setup 24

Chapter 4 Occupied Bandwidth Measurement & Calculation

4.1 Rules and Specification Limits 27
4.2 Test Condition & Test Instruments 27
4.3 Measurement Procedure 28
4.4 Measurement Result 28

Chapter 5 Field Strength of Spurious Radiation Measurement

5.1 Rules and Specification Limits..... 32
5.2 Measurement Condition & Setup 32
5.3 List of Measurement Instruments..... 34
5.4 Measurement Configuration..... 35
5.5 Measurement Result 37

Chapter 6 Frequency Stability Tolerance Measurement

6.1 Rules and Specification limits..... 43
6.2 Measurement Condition & Setup with Temperature Variation..... 43
6.3 List of Measurement Instruments with Temperature Variation..... 43
6.4 Measurement Configuration with Temperature Variation..... 44
6.5 Measurement Result with Temperature Variation..... 45
6.6 Measurement Condition & Setup with Voltage Variation..... 47
6.7 List of Measurement Instruments with Voltage Variation..... 47
6.8 Measurement Configuration with Voltage Variation..... 47
6.9 Measurement Result with Voltage Variation..... 48

Chapter 0 Application for Certification

74.861 (e)(2) : Transmitters may be either crystal controlled or frequency synthesized.
☐ crystal controlled ☑ frequency synthesized

2.1033 (c)(1) : E-J Electronics Co., Ltd. ; 4F , No.11 , Lane 125 , Sec 1 , Kuo Kwang Road Ta Li City , Taichung Hsien Taiwan Taiwan R .O .C – applicant and manufacturer

2.1033 (c)(2) : The equipment is a transmitter, wireless microphone
Model No.: EJ-8LT, WT-480T

2.1033 (c)(3) : Quantity production is planned. See Exhibit C

2.1033 (c)(4) : Type of emission – F3E- FM Modulation

2.1033 (c)(5) : 100Hz ~ 15KHz

2.1033 (c)(6) : 2.000 mW

2.1033 (c)(7) : Specification of 250 mW is met by the equipment in the applicable Part 74.861 (e)(1)(ii)

2.1033 (c)(8) : Final RF amplifier stage current : 10 mA

2.1033 (c)(9) : Description follows

2.1033 (c)(10) : Complete circuit diagrams are included. No modification was made

2.1033 (c)(11) : See Exhibit A. Instruction sheet to user included

2.1033 (c)(12) : See Exhibit F.

2.1033 (c)(13) : N/A

2.1033 (c)(14) : Description follows.

2.1033 (c)(15) : N/A

2.1033 (c)(16) : N/A

2.1033 (c)(17) : N/A

Chapter 1 GENERAL

1.1 Introduction :

The following measurement report is submitted on behalf of *E-J Electronics Co.,Ltd.* in support of a wireless microphone certification in accordance with FCC Rules. 2.1031, 2.1046, 2.1047, 2.1049, 2.1053, 2.1055, 74.801 and 74.861.

Description of EUT :

EUT	:	WIRELESS MICROPHONE
Model No.	:	EJ-8LT, WT-480T
Carrier Frequency Range	:	700 ~ 790 MHz
RF Power Output	:	2.00 mW
Supply Voltage	:	DC 3V
Supply Current	:	30 mA
Frequency Response	:	100Hz ~ 15KHz
Frequency Stability	:	0.005%
Operating Temperature	:	– 30 to + 50 degree centigrade

Wireless microphone is a transmitter which operates in the frequency range of 700 ~ 790 MHz. (700.704MHz, 744.204MHz and 785.704MHz tested) This microphone is worn by a performer and other participants in a program, filming, reporting ..etc.

1.2 Description of Support Equipment :

None

1.3 Configuration of Test Setup

Radiated emission with operating mode:

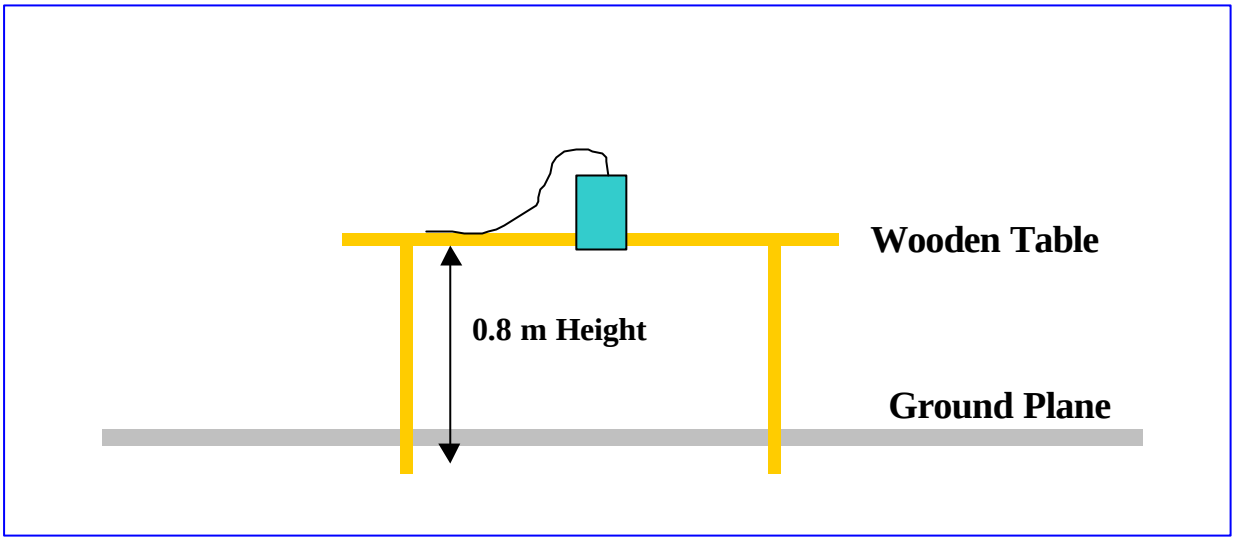

Radiated emission and Conducted emission for charging mode

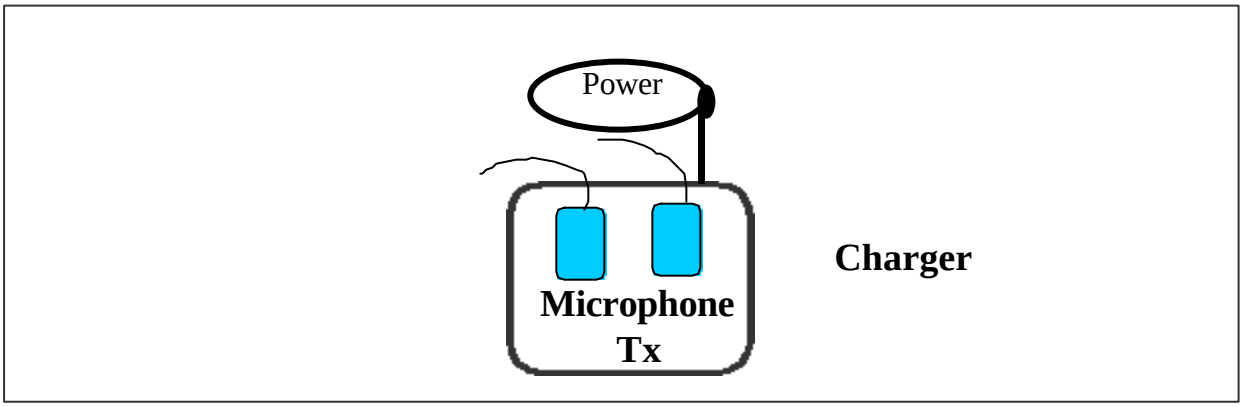

Connections:

EUT:

CHARGER:

*DC jack --- via a 185cm long, non-shielded, no ferrite core, power cable to the AC power source

MICROPHONE(TX):

*Charging pin --- contacted to charging outlet of charger

*Mic. jack --- via a 88cm long, non-shielded, no ferrite core, cable to the Mic.

1.4 Location of the Measurement Site :

The radiated emissions measurements required by the Rules were performed on the Three-meter, anechoic chamber at test site maintained by ***Training Research Co., Ltd.,*** *No. 2, Lane 194, Huan-Ho Street, Hsichih, Taipei Hsien 221, Taiwan*. Complete description and measurement data have been placed on file with the Commission. The conducted power line Emissions tests were performed in a shielded enclosure also located at the above facility.

Training Research Co., Ltd. is listed by the FCC (Registration Number: 93906) as a facility available to do measurement work for others on a contract basis.

1.5 General Test Condition :

The conditions under which the EUT operates were varied to determine their effect on the equipment' s emission characteristics. The final configuration of the test system and the mode of operation used during these tests were chosen as that which produced the highest emission levels. However, only those conditions, which the EUT was considered likely to encounter in normal use were investigated.

1.6 Conducted Emission Test

Test Condition and Setup:

All the equipment is placed and setup according to the ANSI C63.4 - 1992.
The EUT is assembled on a wooden table, which is 80 cm high, is placed 40 cm from the back-wall, which is a vertical conducting plane. One LISN is for EUT, the other LISN is for support equipment. They are all placed on the conductive ground. The EUT' s LISN connect a line switch box for selecting L1 or L2, then connect to a preamplifier and spectrum.

The spectrum scans from 450KHz to 30 MHz. Conducted emission levels are detected at max. peak mode. But if the max. peak mode failed ,it will be measured by CISPR' s quasi-peak detection mode .

While testing, there is the worst-emission plot printed at peak detection mode, and there are more than 6 highest emissions relative to limit recorded. The plot is kept as the original data, not included in test report.

List of test Instrument:

				Calibration Date	
Instrument Name	Model No.	Brand	Serial No.	Last time	Next time
EMI Receiver	8546A	H P	3520A00242	10/01/00	10/01/01
RF Filter Section	85460A	H P	3448A00217	10/01/00	10/01/01
LISN (EUT)	LISN-01	TRC	9912-03,04	12/09/00	12/09/01
LISN (Support E.)	LISN-01	TRC	9912-05	01/04/01	01/04/02
Switch/Control Unit (< 30MHz)	3488A	HP	N/A	11/20/00	11/20/01
Auto Switch Box (< 30MHz)	ASB-01	TRC	9904-01	11/20/00	11/20/01
Anechoic Chamber (cable calibrated together)				05/20/01	05/20/02

The level of confidence of 95% , the uncertainty of measurement of conducted emission is ± 2.4 dB.

Test Result: Pass

Test Configuration of Picture

1.7 Conducted Emission Test Result: Charging mode

Testing room : Temperature : 23 ° C Humidity : 67 % RH

Line 1

Frequency (KHz)	*READING AMPLITUDE*			*LIMIT*		*Margin (dB)*
	Peak (dBmV/m)	*Quasi-Peak (dBmV/m)*	*Average (dBmV/m)*	*Quasi-Peak (dBmV/m)*	*Average (dBmV/m)*	
455.00	40.43	***.**	***.**	48.00	48.00	-7.57
477.00	40.56	***.**	***.**	48.00	48.00	-7.44
496.00	39.86	***.**	***.**	48.00	48.00	-8.14
508.00	40.17	***.**	***.**	48.00	48.00	-7.83
527.00	39.38	***.**	***.**	48.00	48.00	-8.62
538.00	39.50	***.**	***.**	48.00	48.00	-8.50
564.00	39.44	***.**	***.**	48.00	48.00	-8.56
575.00	39.32	***.**	***.**	48.00	48.00	-8.68
597.00	38.60	***.**	***.**	48.00	48.00	-9.40
608.00	38.67	***.**	***.**	48.00	48.00	-9.33

Line 2

Frequency (KHz)	*READING AMPLITUDE*			*LIMIT*		*Margin (dB)*
	Peak (dBmV/m)	*Quasi-Peak (dBmV/m)*	*Average (dBmV/m)*	*Quasi-Peak (dBmV/m)*	*Average (dBmV/m)*	
452.00	44.71	***.**	***.**	48.00	48.00	-3.29
470.00	45.25	***.**	***.**	48.00	48.00	-2.75
502.00	40.52	***.**	***.**	48.00	48.00	-7.48
515.00	45.11	***.**	***.**	48.00	48.00	-2.89
549.00	44.60	***.**	***.**	48.00	48.00	-3.40
582.00	44.44	***.**	***.**	48.00	48.00	-3.56
604.00	43.35	***.**	***.**	48.00	48.00	-4.65
654.00	42.85	***.**	***.**	48.00	48.00	-5.15
675.00	41.73	***.**	***.**	48.00	48.00	-6.27
692.00	40.92	***.**	***.**	48.00	48.00	-7.08

1.8 Radiated Emission Test

Test Condition and Setup:

Pretest : Prior to the final test, the EUT is placed in an anechoic chamber, and scan from 30MHz to 1GHz. This is done to ensure the radiation exactly emits form the EUT.

Final test: Final radiation measurements is made on a **3 – meter** anechoic chamber.. The EUT is placed on a nonconductive table, which is 0.8m height, the top surface is 1.0 x 1.5 meter. All the placement is according to ANSI C63.4 - 1992.

The spectrum is examined from 30MHz to 1GHz measured by HP spectrum.

The whole range Antenna is used to measure frequency from 30 MHz to 1 GHz and All test results were extrapolated equivalent signal at 3 meters utilizing an inverse linear distance extrapolated factor (20dB/decade). The final test is used the spectrum analyzer. Measure more than six top marked frequencies generated form pretest by computer step by step at each frequency. The EUT is rotated 360 degrees, and antenna is raised and lowered from 1 to 4 meters to find the maximum emission levels. The antenna is used with both horizontal and vertical polarization.

Appropriated preamplifier, which is made by TRC is used for improving sensitivity and precautions is taken to avoid overloading. The spectrum analyzer' s 6dB band, width is set to 120 KHz (30MHz ~ 1GHz) and the EUT is measured at quasi-peak mode.

If the emission is close to the frequency band of ambient, the tester will recheck the data and the corrected data will be written in the test data sheet. If the emission is just within the ambient, the data from shield room will be taken as the final data.

List of Test Instrument:

				Calibration Date	
Instrument Name	Model No.	Brand	Serial No.	Last time	Next time
EMI Receiver	8546A	H P	3520A00242	10/01/00	10/01/01
RF Filter Section	85460A	H P	3448A00217	10/01/00	10/01/01
Bi-log Antenna	CBL6141A	Schaffner	4151	06/28/00	06/28/01
Switch/Control Unit (> 30MHz)	3488A	HP	N/A	11/20/00	11/20/01
Auto Switch Box (> 30MHz)	ASB-01	TRC	9904-01	11/20/00	11/20/01
Anechoic Chamber (cable calibrated together)				05/20/01	05/20/02

The level of confidence of 95%, the uncertainty of measurement of radiated emission is ± 4.96 dB.

Test Result: Pass

Test Configuration of Picture

1.9 Radiated Emission Test Result: Charging mode
Horizontal:

Test Conditions:

Testing room : Temperature : 26 ° C Humidity : 68 % RH
Testing site : Temperature : 29 ° C Humidity : 73 % RH

Frequency	Reading Amplitude	Ant. Height	Table	Correction Factors	Corrected Amplitude	Class B Limit	Margin
MHz	dBμV	m	degree	dB/m	dBμV/m	dBμV/m	dB
35.000	11.63	1.00	124	-20.01	31.64	40.00	-8.36
69.310	17.32	1.00	95	-10.95	28.27	40.00	-11.73
***							

Note:

1.Margin = Amplitude – limit, *if margin is minus means under limit.*
2.Corrected Amplitude = Reading Amplitude – Correction Factors
3.Correction factor = Antenna factor + (Cable Loss – Amplitude gain)
(For example : 30MHz correction factor = 15.5 + (-15.26) = 0.24 dB/m)

Vertical:

Frequency	Reading Amplitude	Ant. Height	Table	Correction Factors	Corrected Amplitude	Class B Limit	Margin
MHz	dBμV	m	degree	dB/m	dBμV/m	dBμV/m	dB
35.000	17.20	1.00	137	-20.01	37.21	40.00	-2.79
69.300	15.02	1.00	214	-10.95	25.97	40.00	-14.03
***							

Chapter 2 Power Output Measurement

2.1 Rules and Specification Limits

2.1046(a), ANSI/ TIA/ EIA-603-1992, Paragraph 2.2.1.

74.861 (e)(1) : The power of the measured unmodulated carrier power at output of the transmitter power amplifier (antenna input power) may not exceed the following:

1. 54 – 72, 76 – 88 and 174 – 216 MHz band 50 mW.
2. 470 – 608 and 614 – 806 MHz band 250 mW.

2.2 Test condition and setup :

1. Measurement was made on anechoic chamber. The EUT system was placed on non-conductive turntable which is 0.8 meters height, top surface 1.0 X 1.5 meter. The EUT was placed in three direction of the space in order to obtain maximum emission.
2. A SCHAFFNER whole range antenna with horizontal and vertical polarization was raised from 1 – 4 meter as well as the turntable was rotate 45 degree each time from 0 to 315 degree to search for the maximum Field Strength Spectrum where the spectrum analyzer was operated in the average-peak detection mode. Recorded all the values, which measured under horizontal and vertical position for the bi-log antenna.
3. The following procedures were used to convert the emission levels measured in decibels referenced to 1 micro volt (dBμV) into field intensity in Watt.
   (1) The actual field intensity in decibels referenced to 1 micro volt per meter (dBμV/m) is determined by algebraically adding the measured reading in dBμV, the antenna tactor (dB), and cable loss (dB) at the appropriate frequency.
   (2) The field intensity in Volt can then be determined by the following equation:
   $FI(Volt) = 10^{FI\,(dB\mu V/m)\,/\,20} \times 10^{-6}$

   FI_a(dBmV/m) = FI_r(dBmV) – Corrected (dB)
   Corrected (dB) = AF(dB) + [CL(dB) – Amplitude Gain]
   FI_a : Actual Field Intensity
   FI_r : Reading of the Field Intensity
   AF : Antenna Factor
   CL : Cable Loss

The field intensity in Watt can then be determined by the following equation :
P (watt) = FI^2(Volt) X d^2 (meter) / 49.2
P : Power in Watt
D : Measurement Distance (3 m)

2.3 List of test Instrument :

				Calibration Date	
Instrument Name	Model No.	Brand	Serial No.	Last time	Next time
EMI Receiver	8546A	H P	3520A00242	10/01/00	10/01/01
RF Filter Section	85460A	H P	3448A00217	10/01/00	10/01/01
Bi-log Antenna	CBL6141A	Schaffner	4151	06/28/00	06/28/01
Switch/Control Unit (> 30MHz)	3488A	HP	N/A	11/20/00	11/20/01
Auto Switch Box (> 30MHz)	ASB-01	TRC	9904-01	11/20/00	11/20/01
Spectrum Analyzer	8564E	HP	US36433002	08/03/00	08/03/01
Microwave Preamplifier	83051A	HP	3232A00347	08/04/00	08/04/01
Horn Antenna	3115	EMCO	9704 – 5178	08/09/00	08/09/01

The level of confidence of 95%, the uncertainty of measurement of radiated emission is ± 4.96 dB.

2.4 Measurement Configuration

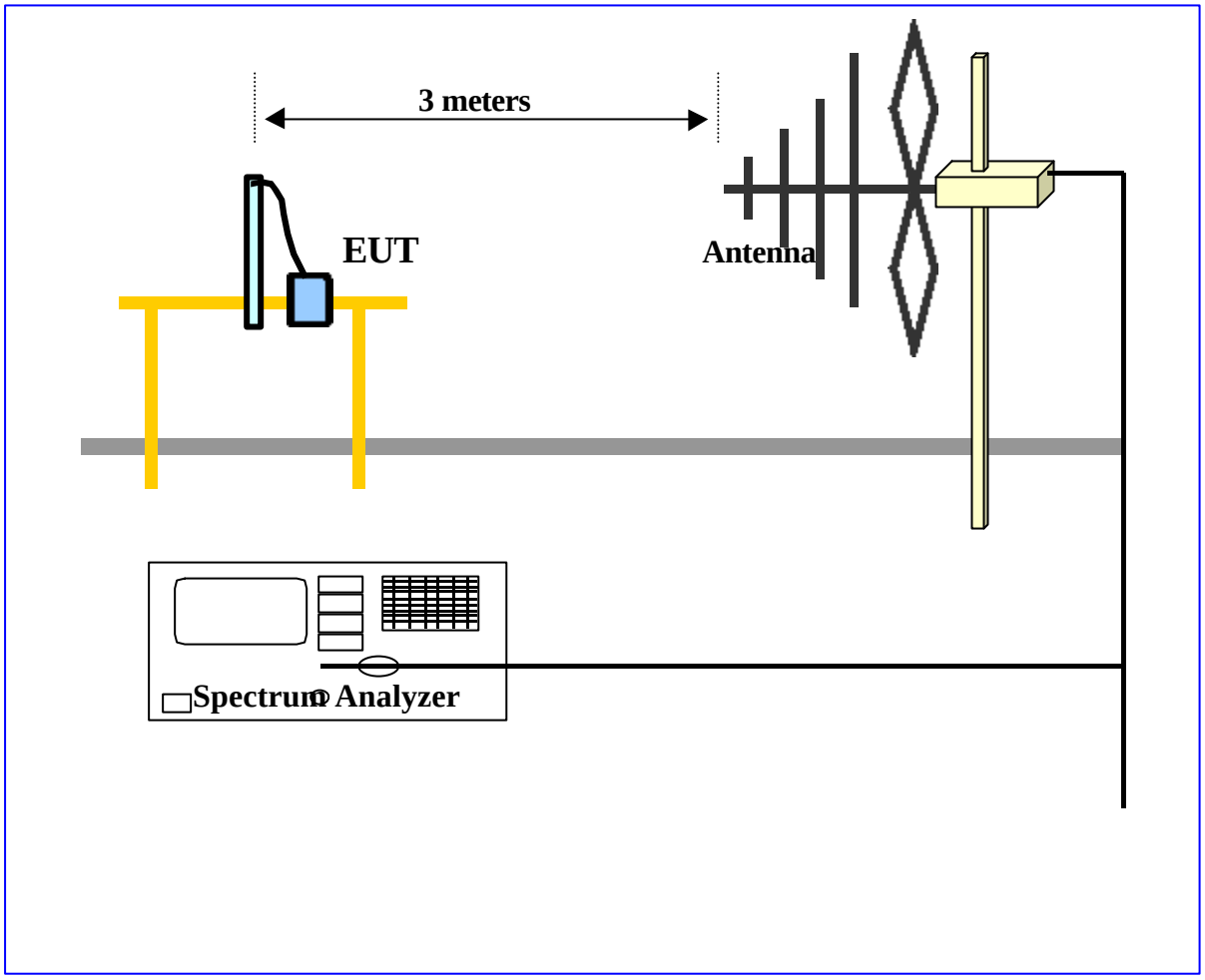

2.5 Measurement Result

(1) Frequency: 700.704 MHz

Corrected (dB) = AF(dB) + [CL(dB) – Amplitude Gain]
= –6.09 dB/m
FI_a (dBm) = FI_r (dBm) – Corrected (dB)
= -3.08 – (–6.09)
=3.01 dBm

The maximum field measured is 3.01 dBm

FI (Volt) = $10^{100.38/20}$ X 10^{-6} = 0. 10447 V
FI (mW) = $(0.10447 \text{ X } 3)^2 / 49.2$ = 1.9965 mW

Angle of Turn Table (°)	Spectrum Reading (dBm)	Corrected (dB)	Actually Value (dBm)	E. R. P. (mW)	8 Position of Average (mW)
0°	-7.59	-6.09	-1.50	0.70	**1.00625**
45°	-1.82	-6.09	4.27	2.67	
90°	-8.59	-6.09	-2.50	0.56	
135°	-4.39	-6.09	1.70	1.48	
180°	-3.5	-6.09	2.59	1.81	
225°	-9.59	-6.09	-3.50	0.44	
270°	-10.47	-6.09	-4.38	0.36	
315°	-22.07	-6.09	-15.98	0.02	

(2) Frequency: 744.204 MHz

Corrected (dB) = AF(dB) + [CL(dB) – Amplitude Gain]
= –5.39 dB/m
FI_a (dBm) = FI_r (dBm) – Corrected (dB)
= -2.7 – (–5.39)
= 2.69 dBm

The maximum field measured is 2.69 dBm

FI (Volt) = $10^{100.06/20}$ X 10^{-6} = 0. 1007 V
FI (mW) = $(0.1007 \text{ X } 3)^2$ / 49.2 = 1.854715 mW

Angle of Turn Table (°)	Spectrum Reading (dBm)	Corrected (dB)	Actually Value (dBm)	E. R. P. (mW)	8 Position of Average (mW)
0°	-7.1	-5.39	-1.71	0.67	**0.575**
45°	-4.57	-5.39	0.82	1.2	
90°	-9.24	-5.39	-3.85	0.41	
135°	-10.49	-5.39	-5.1	0.31	
180°	-7.01	-5.39	-1.62	0.69	
225°	-6.2	-5.39	-0.81	0.83	
270°	-20.16	-5.39	-14.77	0.03	
315°	-8.74	-5.39	-3.35	0.46	

(3) Frequency: 785.704 MHz

Corrected (dB) = AF(dB) + [CL(dB) – Amplitude Gain]
= –5.26 dB/m
FI_a (dBm) = FI_r(dB) – Corrected (dB)
= -10.05 – (–5.26)
= - 4.79 dBm

The maximum field measured is – 4.79 dBm

FI (Volt) = $10^{92.58/20}$ X 10^{-6} = 0.04255 V
FI (mW) = $(0.04255 \text{ X } 3)^2$ / 49.2 = 0.3312342 mW

Angle of Turn Table (°)	Spectrum Reading (dBm)	Corrected (dB)	Actually Value (dBm)	E. R. P. (mW)	8 Position of Average (mW)
0°	-13.72	-5.26	-8.46	0.14	**0.1437**
45°	-12.01	-5.26	-6.75	0.21	
90°	-21.61	-5.26	-16.35	0.02	
135°	-10.51	-5.26	-5.25	0.3	
180°	-11.4	-5.26	-6.14	0.24	
225°	-12.57	-5.26	-7.31	0.18	
270°	-24.09	-5.26	-18.83	0.01	
315°	-18.27	-5.26	-13.01	0.05	

Chapter 3 Modulation Characteristics Measurement

3.1 Rules and Specification Limits

2.1047(a), ANSI/ TIA/ EIA-603-1992, Paragraph 2.2.6.
Voice modulated communication equipment

2.1047(b), ANSI/ TIA/ EIA-603-1992, Paragraph 2.2.3.
Equipment which employs modulation limiting

3.2 Test Configuration & List of Test Instruments

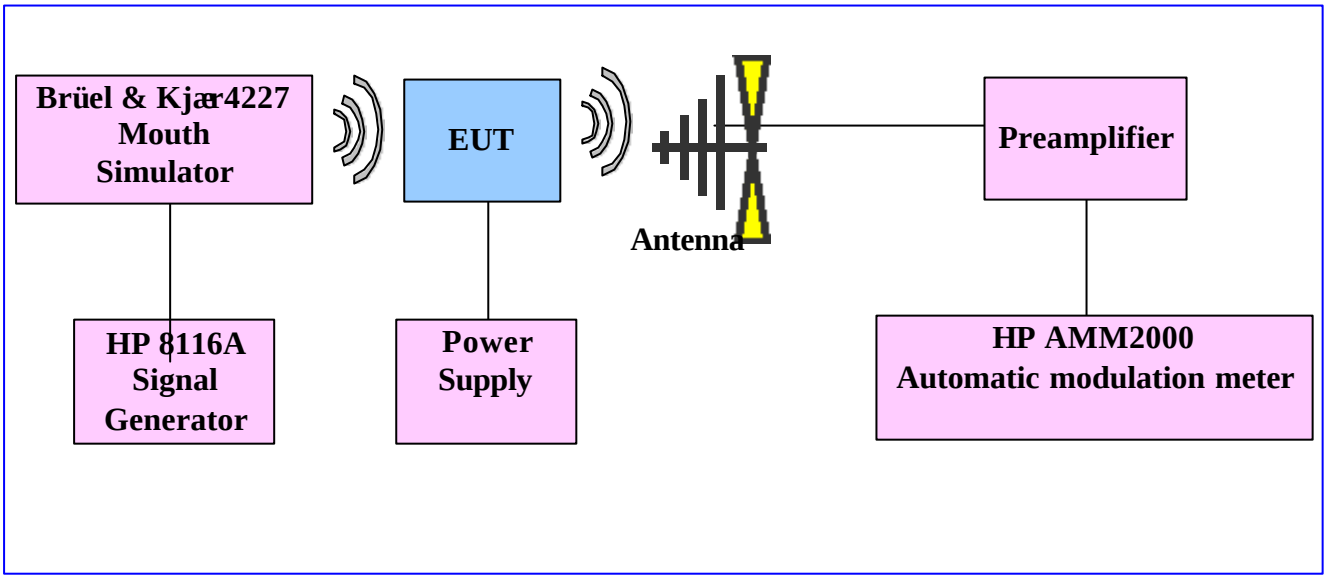

List of test instrument:

Manufacturer	Device	Model No.	Input Impedance
HP	Dynamic Signal Analyzer	HP35660A	50
HP	Signal Generator 50 MHz	HP8116A	50
SCHAFFNER	Bi-log Antenna	CBL6141A	50
Farnell	Modulation Meter	AMM2000	50
TRC	Preamplifier	TRC001	50

3.3 Frequency Response of Audio Modulation Circuit and Low Pass Filter Measurement Condition & Setup

2.1047 (a)

1. The EUT and test equipment were set up as shown on the Section 4.2.
2. The Plus/Function generator was connected to the microphone of EUT, via an artificial mouth simulator.
3. The audio signal input was adjusted to obtain 50% modulation at 1 kHz.
4. With input levels held constant and below limiting at all frequencies, the generator was varied from 100 Hz to 15 kHz.
5. The response in dBm relative to 1kHz was then measured, using the HP 35660A Dynamic Signal Analyzer as follow page.

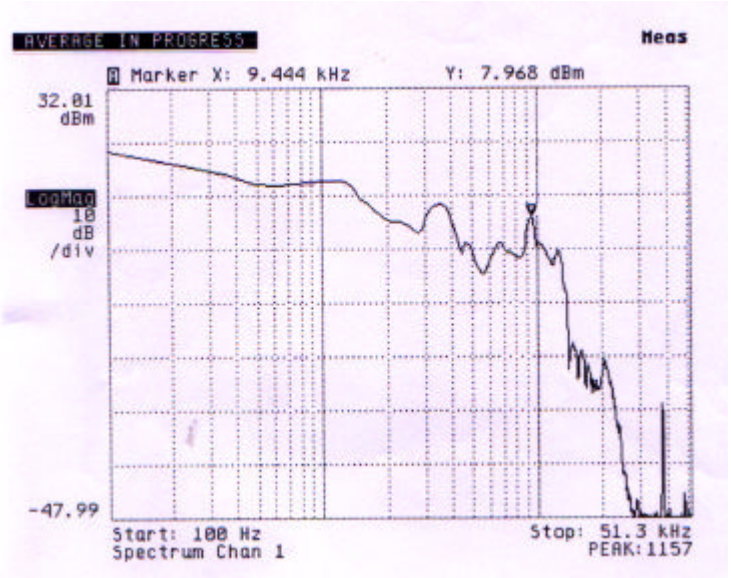
AVERAGE IN PROGRESS
Meas
Marker X: 9.444 kHz
Y: 7.968 dBm
32.01
dBm
LogMag
10
dB
/div
-47.99
Start: 100 Hz
Spectrum Chan 1
Stop: 51.3 kHz
PEAK:1157

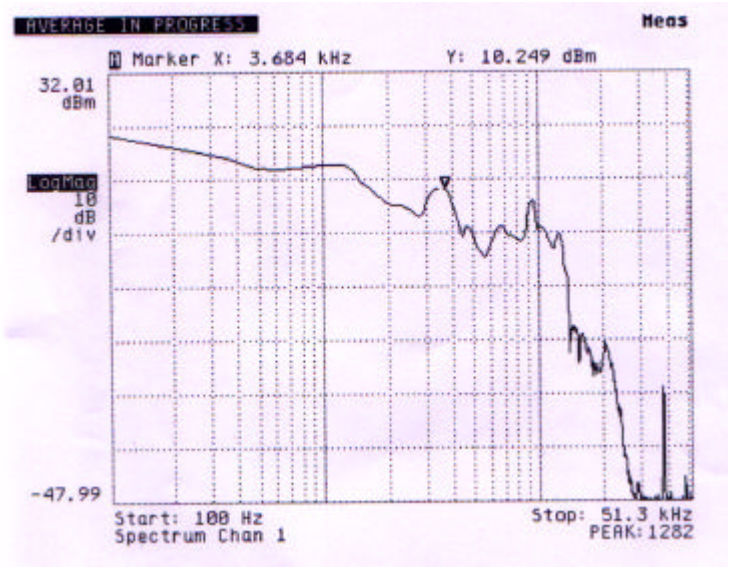
AVERAGE IN PROGRESS
Meas
Marker X: 3.684 kHz
Y: 10.249 dBm
32.01
dBm
LogMag
10
dB
/div
-47.99
Start: 100 Hz
Spectrum Chan 1
Stop: 51.3 kHz
PEAK:1282

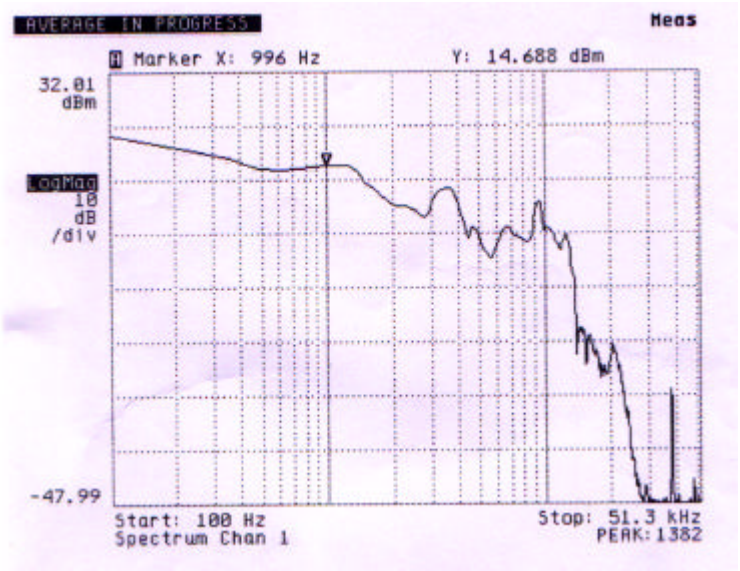
AVERAGE IN PROGRESS
Meas
Marker X: 996 Hz
Y: 14.688 dBm
32.01
dBm
LogMag
10
dB
/div
-47.99
Start: 100 Hz
Spectrum Chan 1
Stop: 51.3 kHz
PEAK:1382

3.4 Modulation Limiting Measurement Condition & Setup

2.1047 (b)

1. The Plus/Function generator was connected to the microphone of EUT, via an artificial mouth simulator.
2. The modulation response was measured for each of five frequencies: 100Hz, 1kHz, 3.684kHz, 9.44kHz and 15 kHz.
3. The input level was varied from 30% modulation to at least 20dB higher than the saturation point.
4. Measurements were performed for both negative and positive modulation and the respective results were recorded.
5. Measurement results as Chart 3.1 to 3.2

Chart 3.1 Modulation Limiting Measuerment Negative

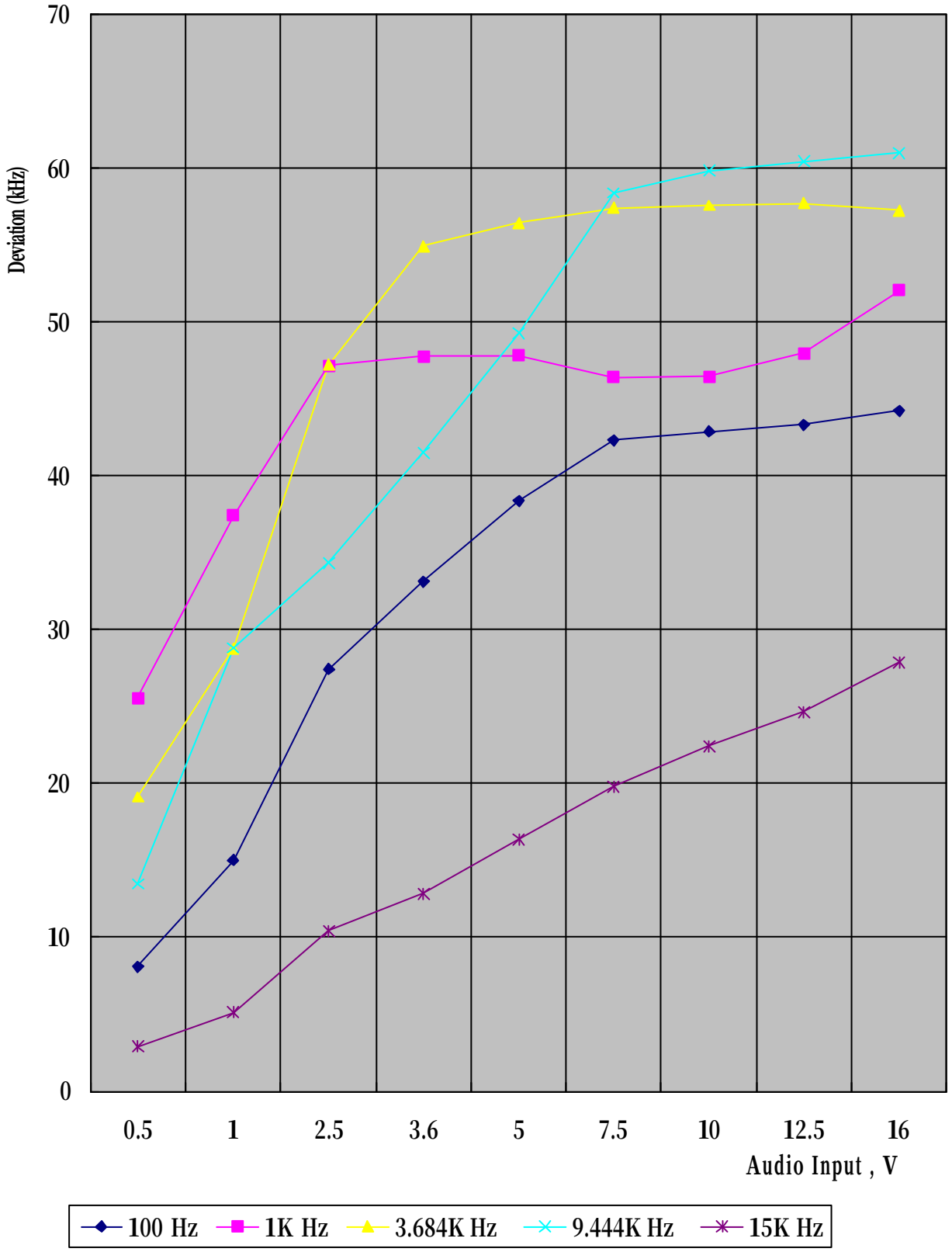

Chart 3.2 Modulation Limiting Measuerment Positive

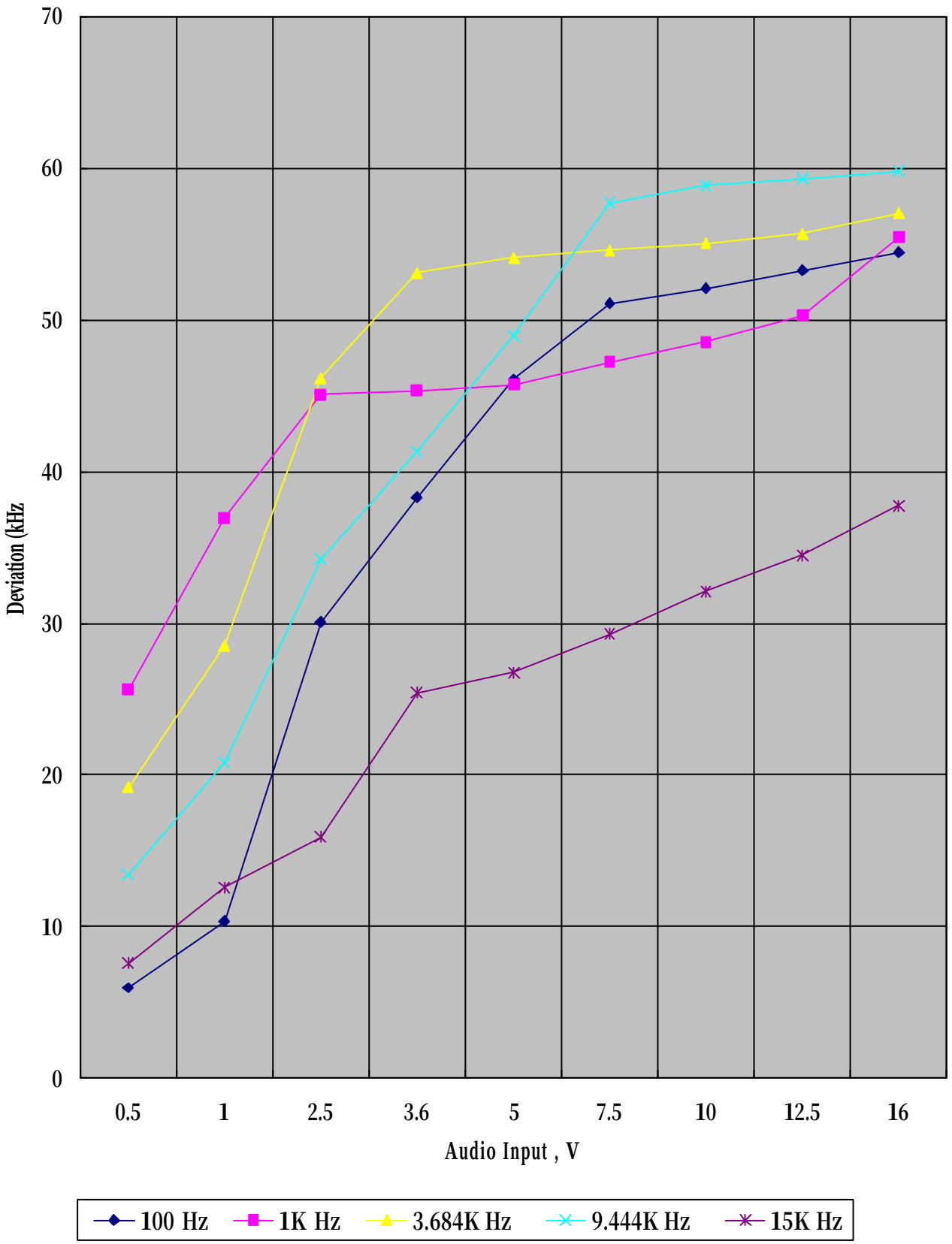

Chapter 4 Occupied Bandwidth Measurement

4.1 Rules and Specification Limits

2.1049 (c)(1): ANSI/ TIA / EIA-603-1992, Paragraph 2.2.11.

74.861 (e)(3): Any form of modulation may be used. A maximum deviation of ±75 kHz is permitted when frequency modulation is employed.

74.861 (e)(5): The operation bandwidth shall not exceed 200kHz.

4.2 Test Configuration & List of Test Instruments

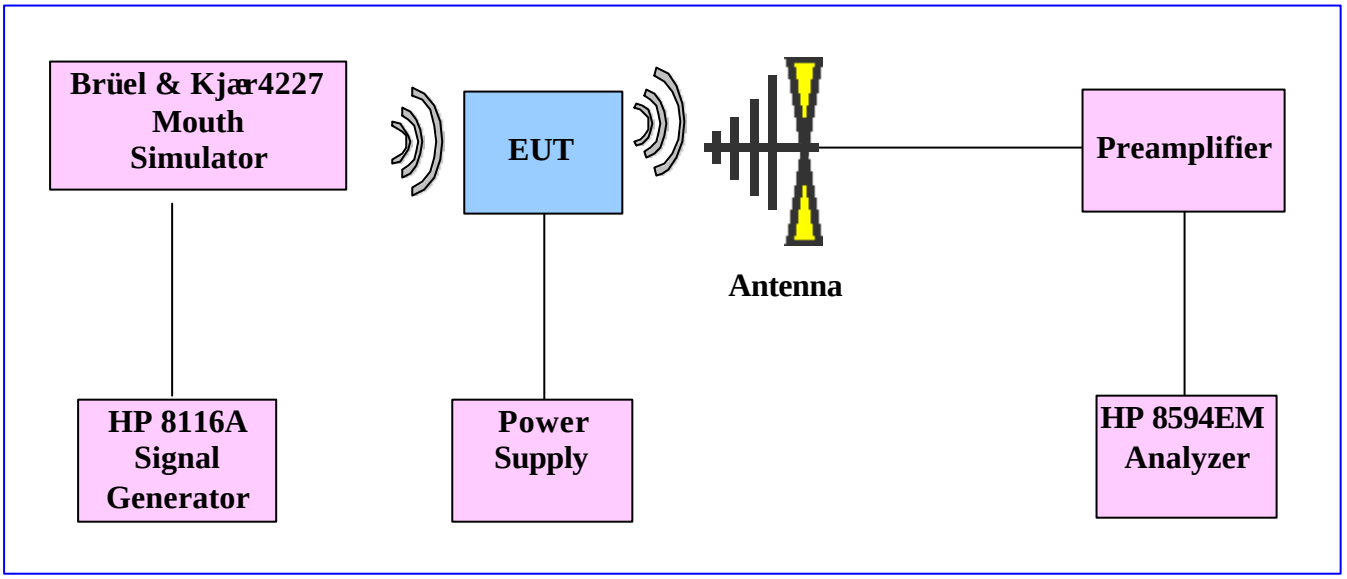

List of test Instrument :

Instrument Name	Model No.	Brand	Input Impedance
Spectrum analyzer (9K~1.8GHz)	8594EM	HP	50
Preamplifier (30MHz~1GHz)	TRC001	TRC	50
Signal Generator 50 MHz	HP8116A	HP	50
Bi-log Antenna	CBL6141A	SCHAFFNER	50

4.3 Measurement Procedure

1. Connect the EUT as Section 4.2 .
2. Plot the unmodulated chart shows on spectrum.
3. Set the output of the signal generator to 100Hz, 1kHz, 3.684kHz, 9.44kHz and 15kHz. Increase the amplitude of the signal, while monitoring the modulation meter. Until modulation is max. Measure the bandwidth under 26 dB compared to the unmodulated fundamental carrier peak level of the modulated signal displayed on the spectrum analyzer.
4. The occupied Bandwidth was measured as follow pages.

4.4 Measurement Result

The occupied bandwidth's plot is presented on following pager, which illustrates compliance with the rules.

Calculation of Necessary Bandwidth (Bn)
Bn = 2M + 2D
M = Max. Modulation Frequency = 15.000 kHz
D = Peak Frequency Deviation = 60.95 kHz (Chart 3-1)
K = 1
Bn = 151.90 kHz

Unmodulation

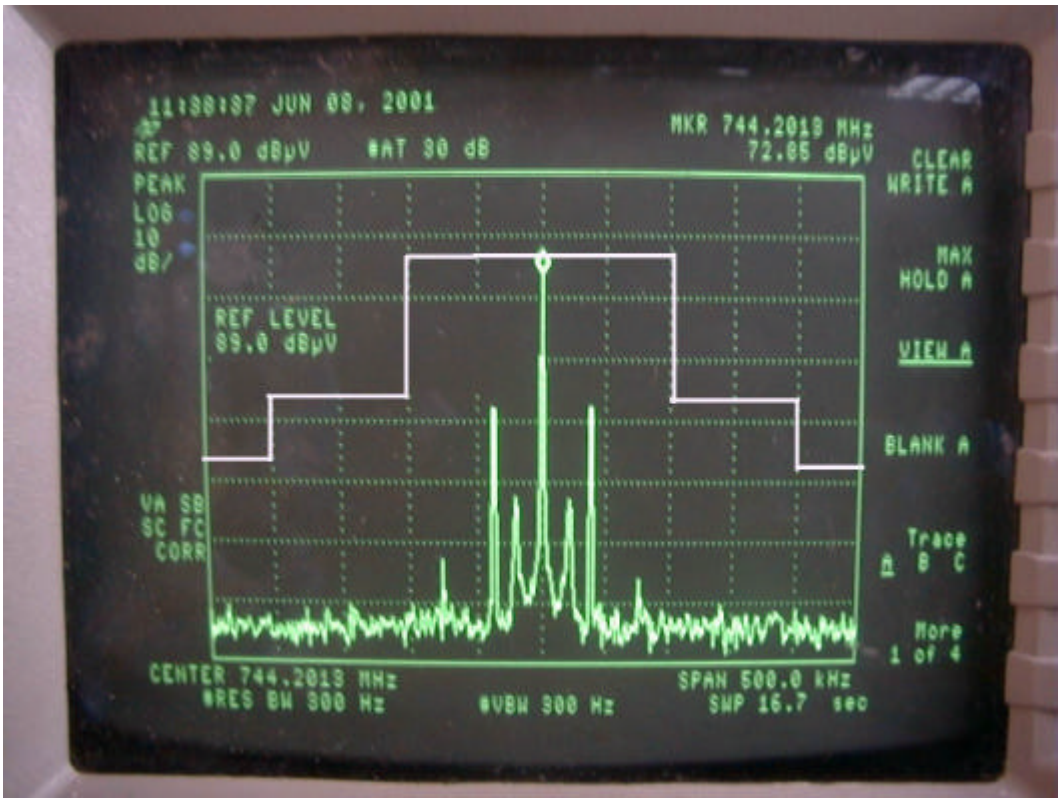

100Hz modulation

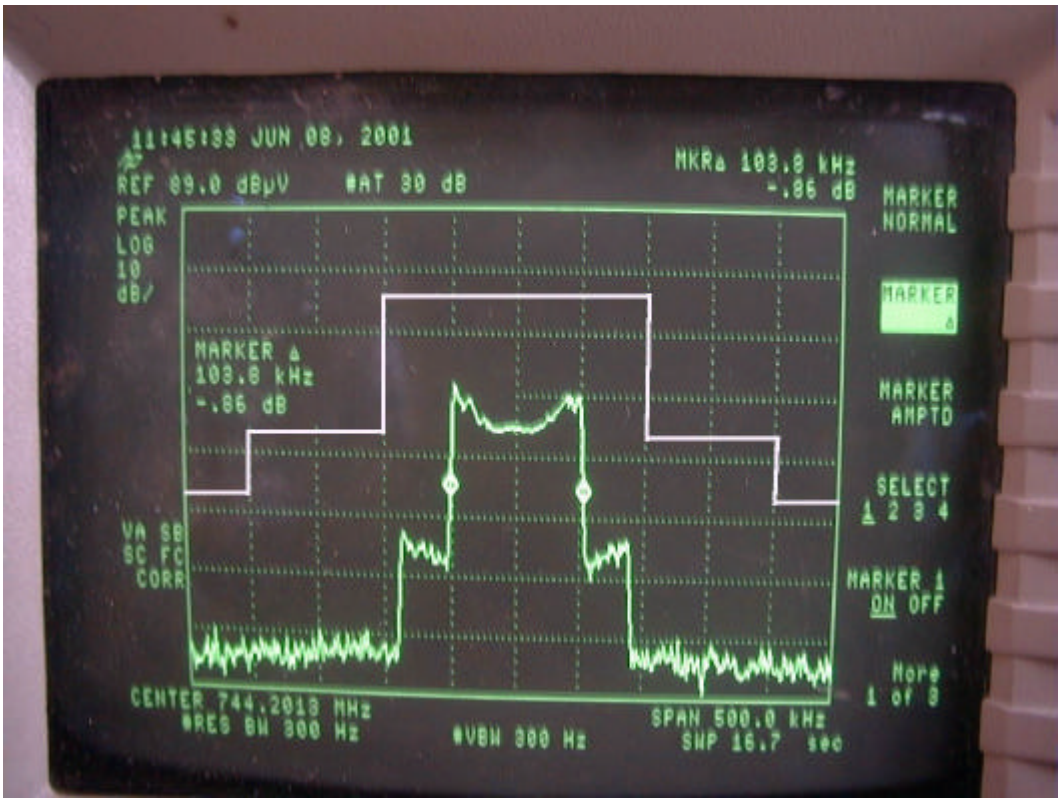

1KHz modulation

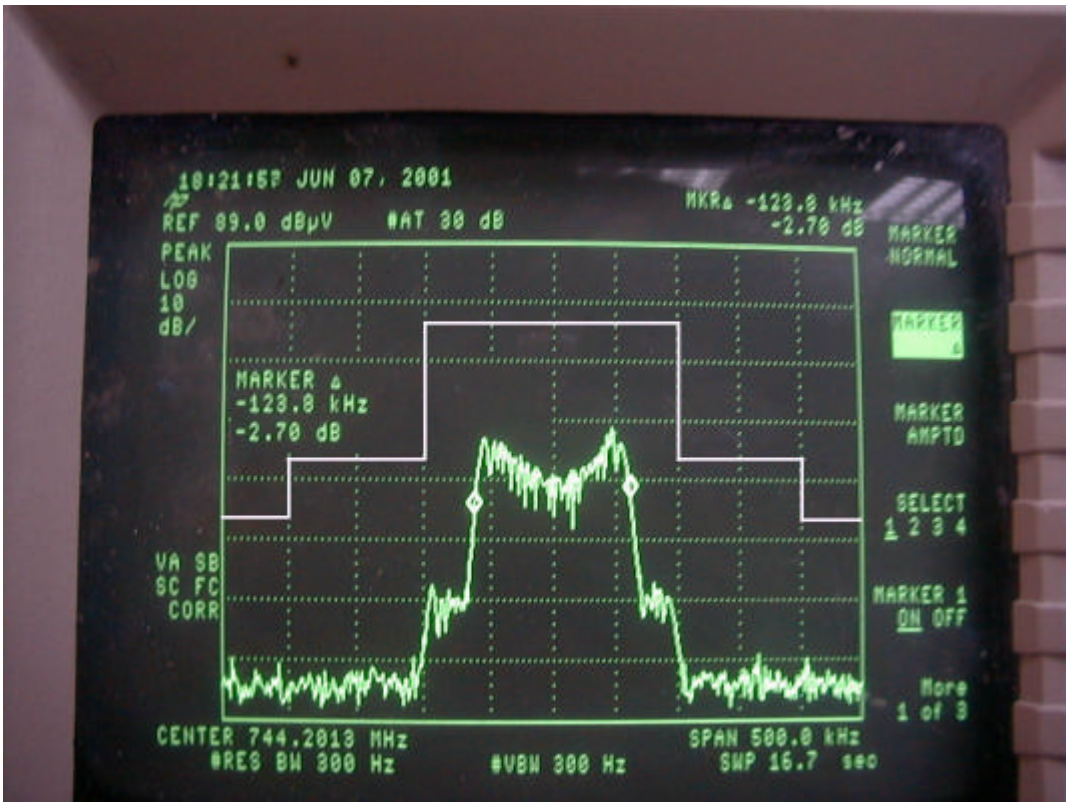

3.684KHz modulation

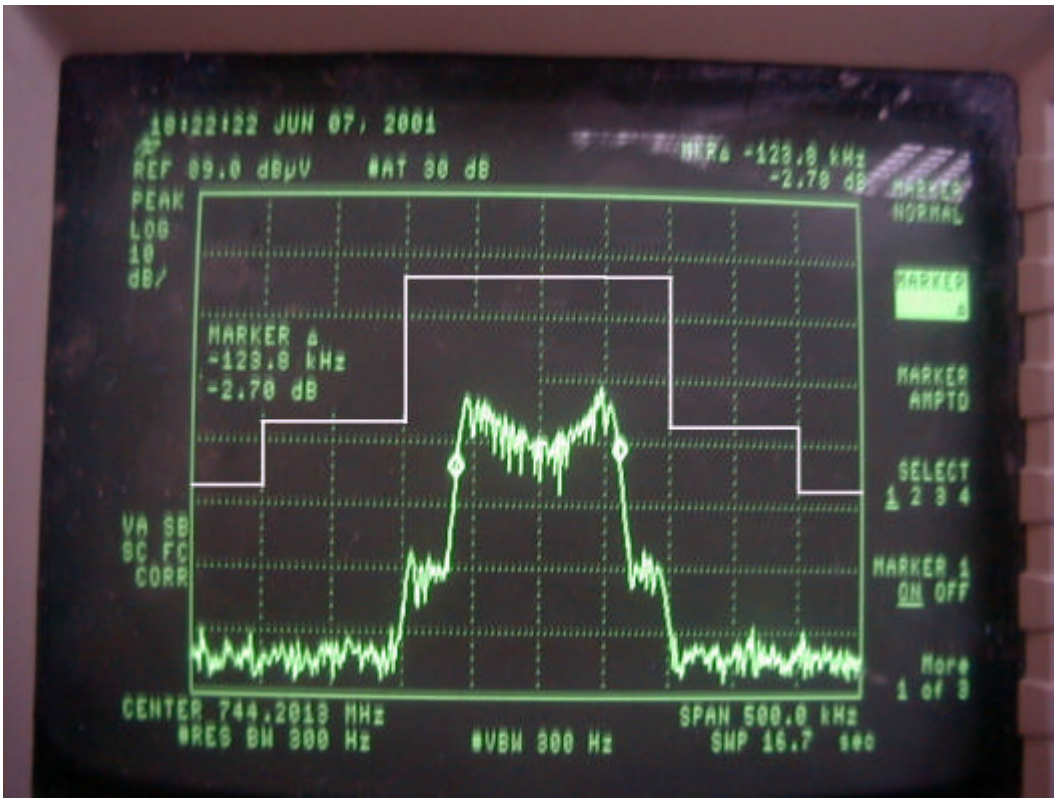

9.44 KHz modulation

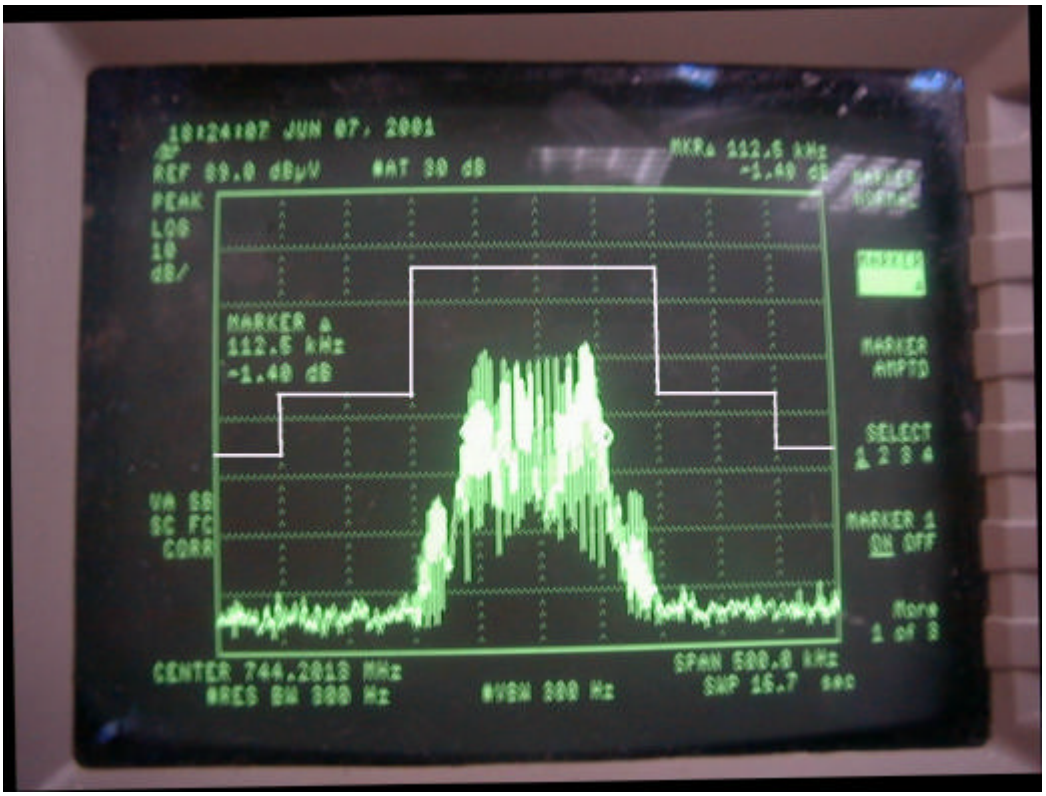

15KHz modulation

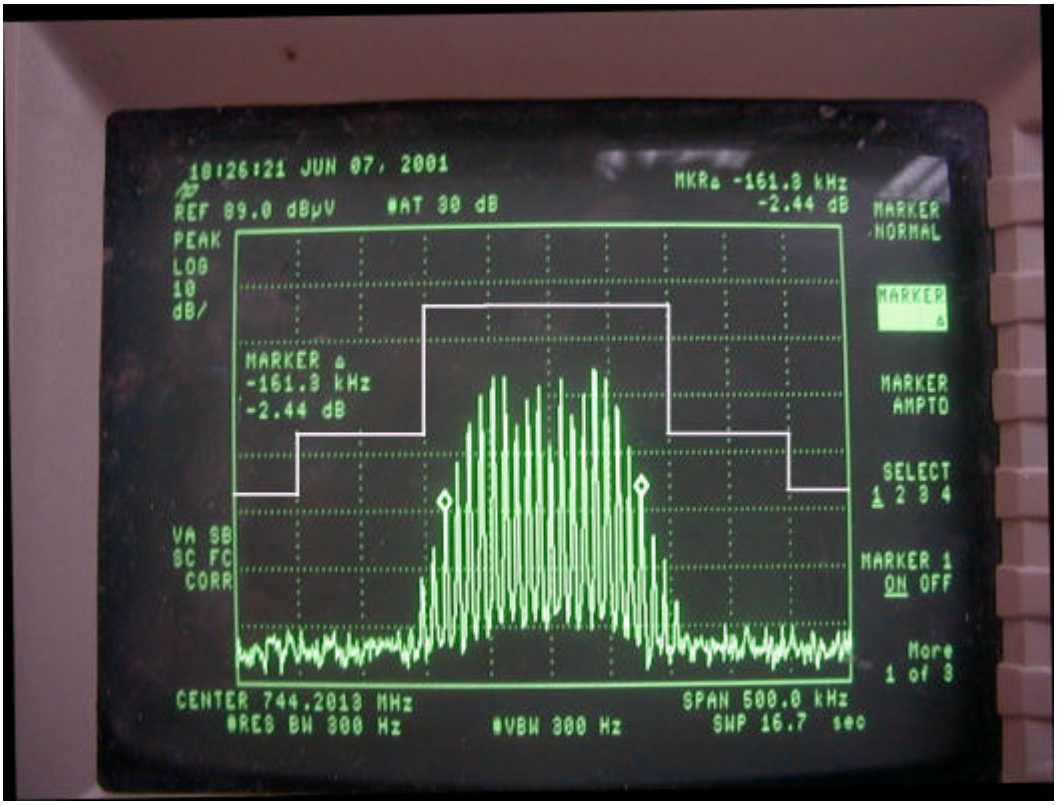

Chapter 5 Field Strength of Spurious Radiation Measurement

5.1 Rules and Specification Limits

2.1053 (a) : ANSI/ TIA/ EIA-603-1992, Paragraph 2.2.12

Measurements shall be made to detect spurious emissions that may be radiated directly from the cabinet, control circuits, Power leads, or intermediate circuit elements under normal conditions of installation and operation.

74.861(e)(6)(iii) :

Spurious and harmonics must be at least 43 + 10 log (Output Power) below the Carrier peak.

2.1057 :

In all measurements set forth , the spectrum should be investigated from the lowest radio frequency generated in the equipment up to at least the 10th harmonic of the carrier frequency.

5.2 Measurement Condition & Setup

Pretest : The EUT is placed in a anechoic chamber, and scan from 30MHz to 1GHz.This is done to ensure the radiation exactly emits form the EUT.

Final test : Final radiation measurements is made on a ***3 - meter, anechoic chamber.*** The EUT is placed on a nonconductive table, which is 0.8m height, the top surface is 1.0 x 1.5 meter. All the placement is according to ANSI C63.4 - 1992.

The spectrum is examined from 30 MHz to 18 GHz measured by HP spectrum.

The SCHAFFNER and EMCO whole range Antenna is used to measure frequency from 30 MHz to 18 GHz. The final test is used the spectrum HP 8546A, HP 85460A and 8564E.

Measure more than six top marked frequencies generated form pretest by computer step by step at each frequency. The EUT is rotated 360 degrees, and antenna is raised and lowered from 1 to 4 meter to find the maximum emission levels. The antenna is used with both horizontal and vertical polarization.

Appropriated preamplifier which is made by TRC is used for improving sensitivity and precautions is taken to avoid overloading .The spectrum analyzer’s 6dB bandwidth is set to 120 K Hz , and the EUT is measured at quasi-peak mode.

If the emission is close to the frequency band of ambient, the tester will recheck the data and the corrected data will be written in the test data sheet. If the emission is just within the ambient, the data from anechoic will be taken as the final data.

The actual field intensity in decibels referenced to 1 micro volt per meter (dBμV/m) is determined by algebraically adding the measured reading in dBμV, the antenna factor (dB) and cable loss (dB) at the appropriate frequency.

(1) Band of Frequency: (30M Hz ~ 18G Hz)
FI_a (dBμV/m) = FI_r (dBμV) – Corrected (dB)
Corrected (dB) = AF(dB) + CL (dB) – Amplifier Gain
FI_a : Actual Field Intensity
FI_r : Reading of the Field Intensity
AF : Antenna Factor
CL : Cable Loss

5.3 List of Measurement Instruments

				Calibration Date	
Instrument Name	Model No.	Brand	Serial No.	Last time	Next time
EMI Receiver	8546A	H P	3520A00242	10/01/00	10/01/01
RF Filter Section	85460A	H P	3448A00217	10/01/00	10/01/01
Bi-log Antenna	CBL6141A	Schaffner	4151	06/28/00	06/28/01
Switch/Control Unit (> 30MHz)	3488A	HP	N/A	11/20/00	11/20/01
Auto Switch Box (> 30MHz)	ASB-01	TRC	9904-01	11/20/00	11/20/01
Spectrum Analyzer	8564E	HP	US36433002	08/03/00	08/03/01
Microwave Preamplifier	83051A	HP	3232A00347	08/04/00	08/04/01
Horn Antenna	3115	EMCO	9704 – 5178	08/09/00	08/09/01
Anechoic Chamber & cable calibrated together				05/20/00	05/20/01

The level of confidence of 95%, the uncertainty of measurement of radiated emission is ± 4.96 dB.

5.4 Measurement Configuration

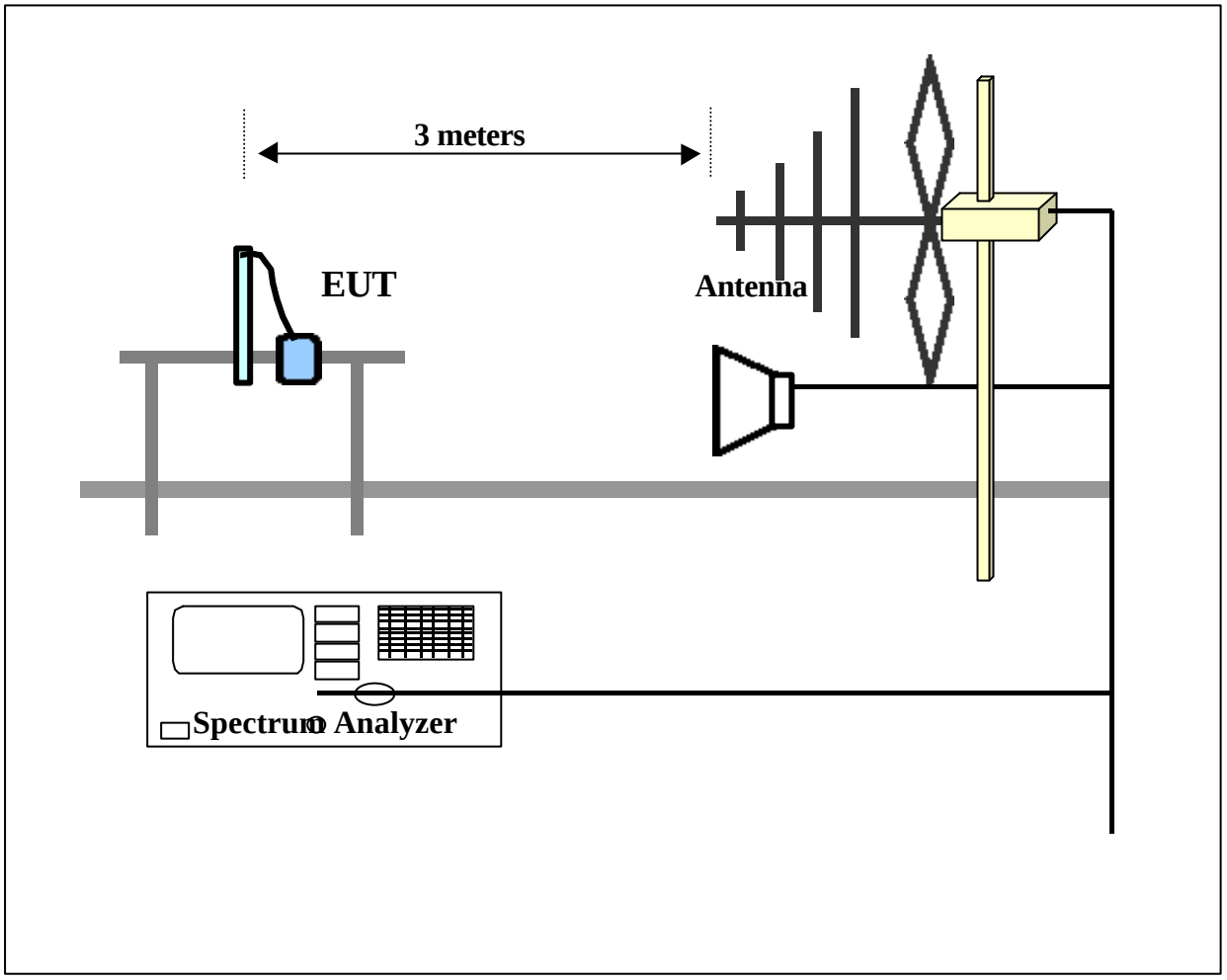

Test Configuration of Picture

5.5 Measurement Result:
(Test Frequency: 700.704MHz , Horizontal)

Test Conditions:

Testing room : Temperature : 26 °C Humidity : 73 % RH
Testing site : Temperature : 31 °C Humidity : 75 % RH

Frequency	*Reading Amplitude*	*Ant. Height*	*Table*	*Correction Factors*	*Corrected Power*	*Attenuated below the mean power*	*minimum Attenuation limit*
GHz	dBm	m	degree	dB/m	dBm	dB	dB
1.401	-81.59	1.00	28	-4.62	-76.97	92.97	16
2.096	-54.43	1.00	64	-1.33	-53.1	69.10	16
2.793	-48.77	1.00	198	-0.93	-47.84	63.84	16
3.498	-53.02	1.00	44	-2.50	-50.52	66.52	16
4.204	-75.06	1.00	10	-34.67	-40.39	56.39	16
4.901	-80.37	1.00	38	-35.65	-44.72	60.72	16
5.607	-75.84	1.00	62	-36.85	-38.99	54.99	16
6.303	-78.65	1.00	78	-37.94	-40.71	56.71	16
***							

Note:

1. Margin = Amplitude - limit, *if margin is minus means under limit.*
2. Corrected Amplitude = Reading Amplitude – Correction Factors
3. Correction factor = Antenna factor + (Cable Loss – Amplitude Gain)
4. Attenuation required = 43 + 10 log (0.1.9965 mW) = 16.00

Radiated Emission Test Result:
(Test Frequency: 700.704MHz , Vertical)

Frequency	*Reading Amplitude*	*Ant. Height*	*Table*	*Correction Factors*	*Corrected Amplitude*	*Attenuated below the mean power*	*minimum Attenuation limit*
GHz	dBμV	m	degree	dB/m	dBm	dB	dB
1.401	-78.26	1.00	68	-3.78	-74.48	90.48	16
2.096	-36.89	1.00	134	-0.06	-36.83	52.83	16
2.793	-39.48	1.00	327	2.77	-42.25	58.25	16
3.498	-49.63	1.00	50	-1.28	-48.35	64.35	16
4.204	-75.31	1.00	94	-34.92	-40.39	56.39	16
4.901	-79.60	1.00	184	-34.88	-44.72	60.72	16
5.607	-75.18	1.00	218	-36.19	-38.99	54.99	16
6.303	-78.59	1.00	36	-37.88	-40.71	56.71	16
***							

Measurement Result:
(Test Frequency:744.204MHz , Horizontal)

Frequency	*Reading Amplitude*	*Ant. Height*	*Table*	*Correction Factors*	*Corrected Amplitude*	*Attenuated below the mean power*	*minimum Attenuation limit*
GHz	dBm	m	degree	dB/m	dB m	dB	dB
1.488	-45.16	1.00	22	-4.45	-40.71	56.39	15.68
2.224	-54.33	1.00	9	-1.10	-53.23	68.91	15.68
2.976	-47.36	1.00	141	-0.87	-46.49	62.17	15.68
3.718	-80.02	1.00	95	-33.74	-46.28	61.96	15.68
4.461	-71.72	1.00	417	-34.91	-36.81	52.49	15.68
5.203	-71.10	1.00	206	-36.29	-34.81	50.49	15.68
5.955	-73.94	1.00	4	-36.43	-37.51	53.19	15.68
6.707	-81.98	1.00	189	-38.36	-43.62	59.30	15.68
***							

Note:

1. Margin = Amplitude - limit, *if margin is minus means under limit.*
2. Corrected Amplitude = Reading Amplitude – Correction Factors
3. Correction factor = Antenna factor + (Cable Loss – Amplitude Gain)
7. Attenuation required = 43 + 10 log (1.8547 mW) = 15.68

Radiated Emission Test Result:
(Test Frequency: 744.204MHz , Vertical)

Frequency	*Reading Amplitude*	*Ant. Height*	*Table*	*Correction Factors*	*Corrected Amplitude*	*Attenuated below the mean power*	*minimum Attenuation limit*
GHz	dBm	m	degree	dB/m	dBm	dB	dB
1.488	-80.67	1.00	73	-3.55	-77.12	92.8	15.68
2.224	-49.74	1.00	10	0.78	-50.52	66.2	15.68
2.976	-29.13	1.00	58	3.41	-32.54	48.22	15.68
3.718	-70.79	1.00	151	-33.7	-37.09	52.77	15.68
4.461	-75.5	1.00	206	-34.22	-41.28	56.96	15.68
5.203	-70	1.00	27	-35.57	-34.43	50.11	15.68
5.955	-66.61	1.00	116	-35.76	-30.85	46.53	15.68
6.707	-74	1.00	237	-38.62	-35.38	51.06	15.68
***							

Measurement Result:
(Test Frequency: 785.704MHz , Horizontal)

Frequency	*Reading Amplitude*	*Ant. Height*	*Table*	*Correction Factors*	*Corrected Amplitude*	*Attenuated below the mean power*	*minimum Attenuation limit*
MHz	dBm	m	degree	dB/m	dBm	dB	dB
1.571	-79.14	1.00	111	-5.2	-73.94	82.14	8.20
2.353	-44.29	1.00	64	-1.06	-43.23	51.43	8.20
3.141	-38.28	1.00	150	-1.33	-36.95	45.15	8.20
3.929	-77.18	1.00	29	-34.29	-42.89	51.09	8.20
4.718	-69.92	1.00	146	-35.33	-34.59	42.79	8.20
5.497	-63.04	1.00	228	-36.97	-26.07	34.27	8.20
6.285	-67.68	1.00	339	-37.85	-29.83	38.03	8.20
***							

Note:

1. Margin = Amplitude - limit, *if margin is minus means under limit.*
2. Corrected Amplitude = Reading Amplitude – Correction Factors
3. Correction factor = Antenna factor + (Cable Loss – Amplitude Gain)
4. Attenuation required = 43 + 10 log (0.3313 mW) = 8.20

Radiated Emission Test Result:
(Test Frequency: 785.704MHz , Vertical)

Frequency	*Reading Amplitude*	*Ant. Height*	*Table*	*Correction Factors*	*Corrected Amplitude*	*Attenuated below the mean power*	*minimum Attenuation limit*
MHz	dBm	m	degree	dB/m	dBm	dB	dB
1.571	-78.96	1.00	82	-4.39	-74.57	82.77	8.20
2.353	-36.04	1.00	35	1.23	-37.27	45.47	8.20
3.141	-26.67	1.00	35	2.14	-28.81	37.01	8.20
3.929	-71.49	1.00	39	-35.03	-36.46	44.66	8.20
4.718	-67.15	1.00	167	-34.53	-32.62	40.82	8.20
5.497	-57.55	1.00	229	-36.31	-21.24	29.44	8.20
5.285	-63.45	1.00	64	-35.77	-27.68	35.88	8.20
***							

Chapter 6 Frequency Stability Tolerance Measurement

6.1 Rules and Specification Limits

2.1055, ANSI/ TIA/ EIA-603-1992, Paragraph 2.2.2 .
74.861(e)(4): The frequency tolerance of the transmitter shall be 0.005 percent.

6.2 Measurement Condition & Setup with Temperature Variation

1. Place the EUT in the chamber, powered in its normal operation.
2. Set the temperature of the chamber -30 degree Centigrade. Allow the equipment to stabilize at that temperature.
3. Measured the carrier frequency using preamplifier and frequency counter.
4. Repeated procedures 1 to 3 from -20 to 50 degree Centigrade at internals of 10 degree.

6.3 List of Measurement Instruments with Temperature Variation List of test Instrument :

Instrument Name	Model No.	Brand	Remark
Spectrum Analyzer	8591A	H P	1.8GHz
Temperature Chamber	THS-MV2	King Son	
Near field Probe	7405-901	EMCO	
Power Supply	GPR-6030	Good Will	
Auto Transformer	Powerstat	Supprior Elec. Co.	

6.4 Measurement Configuration of Temperature Variation Test:

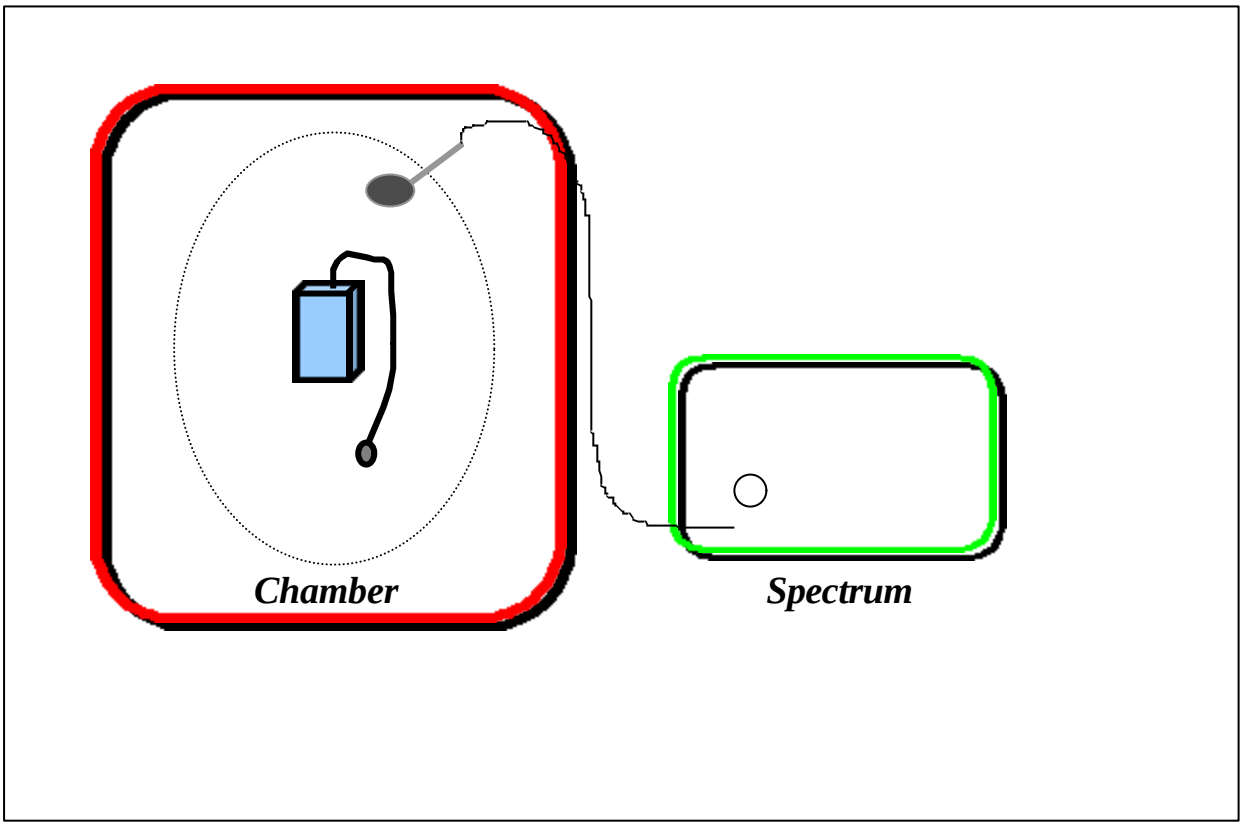

6.5 Measurement Result with Temperature Variation

A plot and table is presented which illustrates compliance with the rule where the center frequency is 744.204MHz.

Temperature Variation Table

Temperature (Centigrade)	*Frequency (MHz)*	*Tolerance (MHz)*
-30	744.189080	744.166789 ~ 744.241210
-25	744.193378	744.166789 ~ 744.241210
-20	744.195454	744.166789 ~ 744.241210
-15	744.197208	744.166789 ~ 744.241210
-10	744.198175	744.166789 ~ 744.241210
-5	744.199028	744.166789 ~ 744.241210
0	744.199707	744.166789 ~ 744.241210
5	744.200097	744.166789 ~ 744.241210
10	744.200326	744.166789 ~ 744.241210
15	744.200453	744.166789 ~ 744.241210
20	744.200511	744.166789 ~ 744.241210
25	744.200589	744.166789 ~ 744.241210
30	744.200981	744.166789 ~ 744.241210
35	744.201347	744.166789 ~ 744.241210
40	744.201743	744.166789 ~ 744.241210
45	744.201925	744.166789 ~ 744.241210
50	744.202115	744.166789 ~ 744.241210

Temperatuer Variation Vs. Frequency Chart

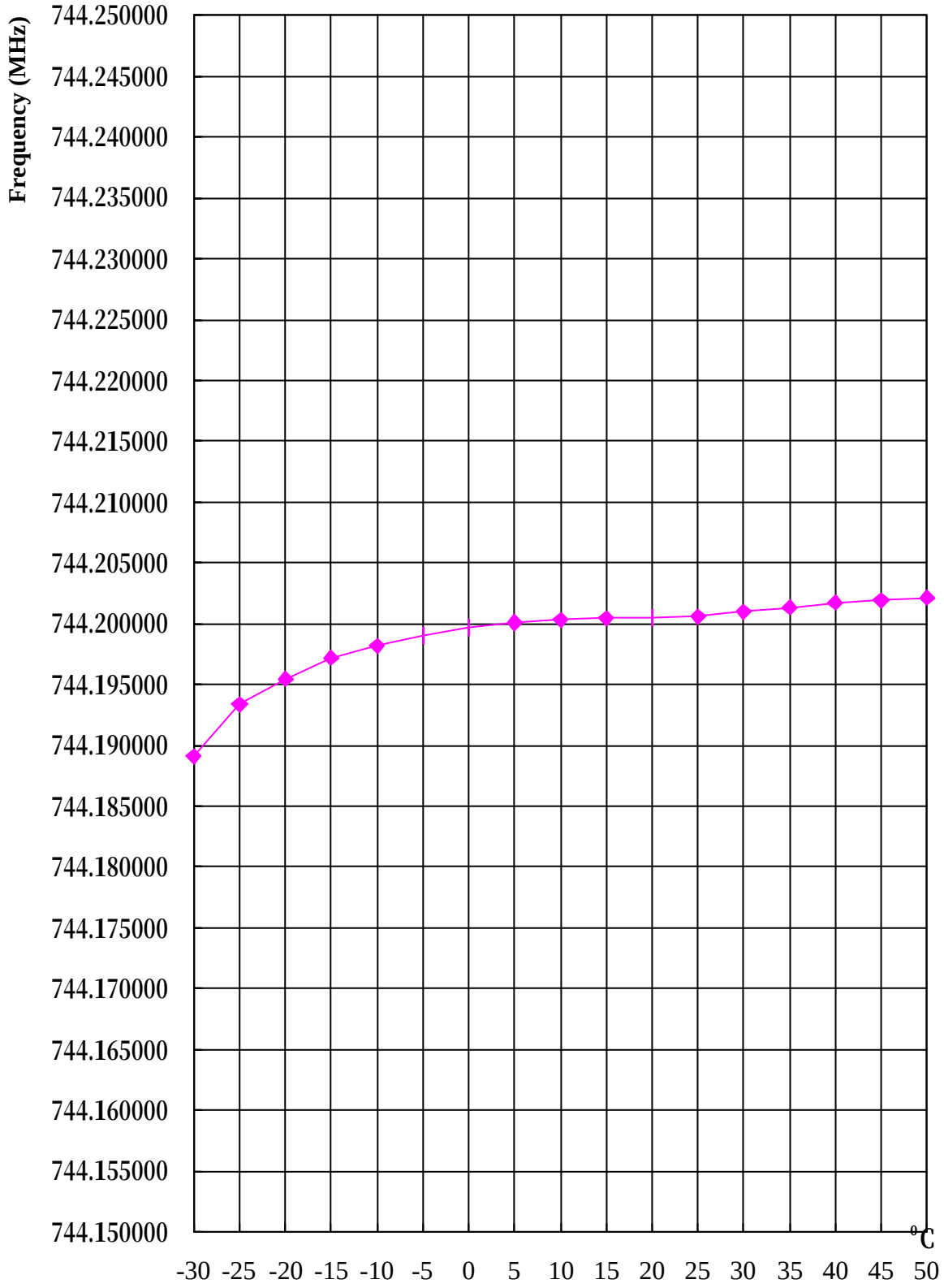

6.6 Measurement Condition & Setup with Voltage Variation

1. Attached the power line of the power supply to the battery position of the EUT.
2. Tuned the output power level to battery end point, 85 %, 100%, 115% of the normal operation power of EUT.
3. Recorded the frequency with a frequency counter.

6.7 List of Test Instrument :

Instrument Name	Model No.	Brand	Remark
Spectrum Analyzer	8591A	H P	1.8GHz
Temperature Chamber	THS-MV2	King Son	
Near field Probe	7405-901	EMCO	
Power Supply	GPR-6030	Good Will	
Auto Transformer	Powerstat	Supprior Elec. Co.	

6.8 Configuration of Voltage Variation Test :

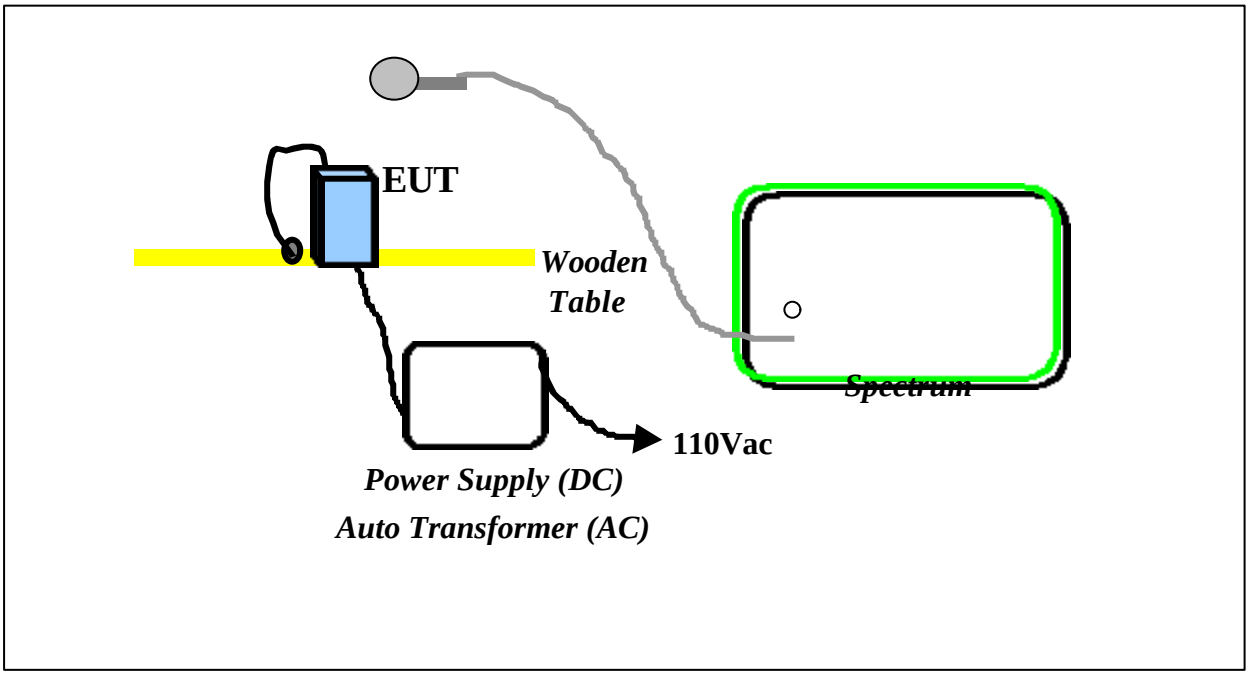

6.9 Measurement Result with Voltage Variation

Frequency Stability of Voltage Variation Measurement Table

Supply Voltage (Volt)	*Frequency (MHz)*	*Tolerance (MHz)*
2.55 (85%)	744.200609	744.166789 ~ 744.241210
3 (100%)	744.200569	744.166789 ~ 744.241210
3.45 (115%)	744.200596	744.166789 ~ 744.241210
Endpoint-Voltage: 1.50V		
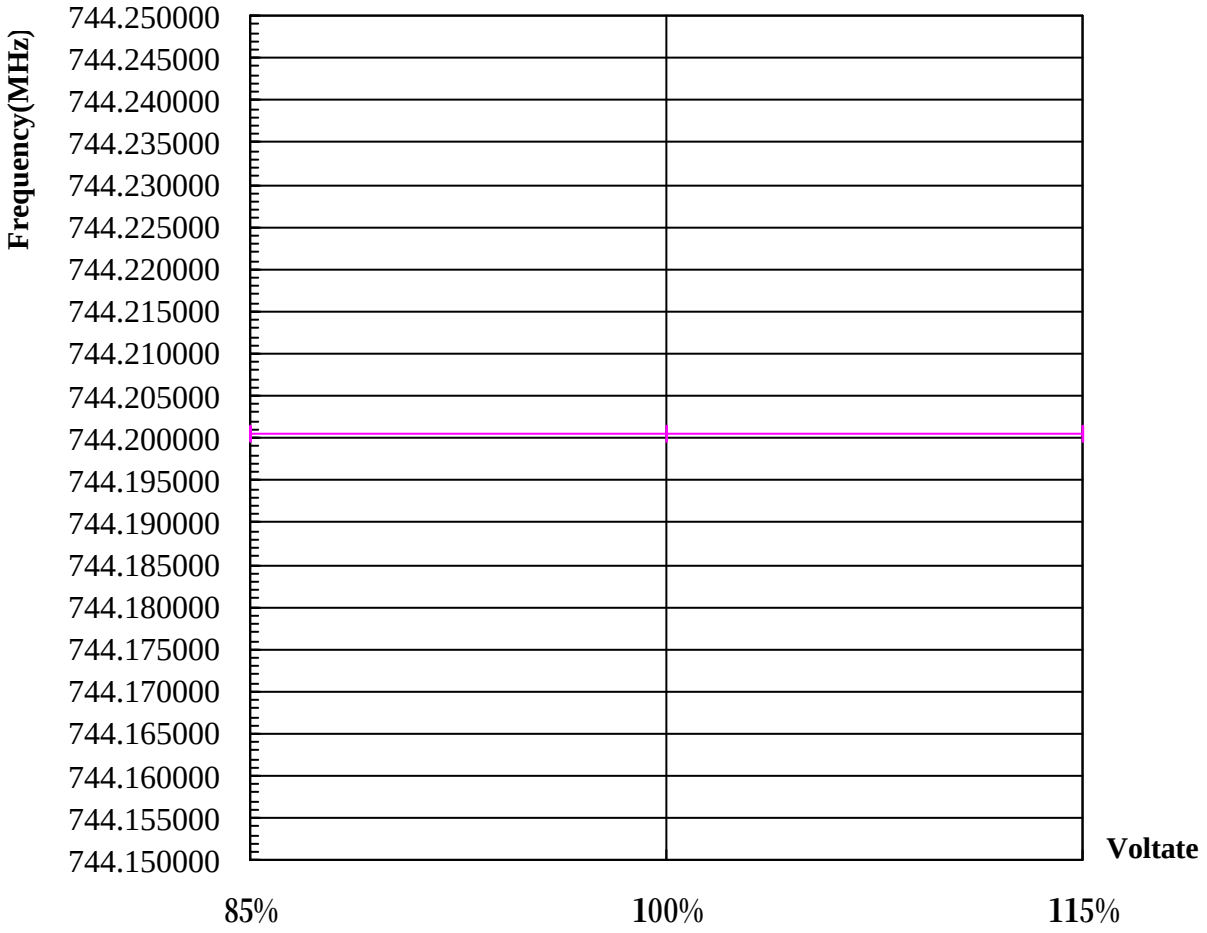
Voltage Variation Vs. Frequency Chart