KTL Test Report:	9R01703 Issue 2.0
Applicant:	Tash International Inc. Unit 1 – 91 Station Street Ajax, Ontario L1S 3H2
Equipment Under Test: **(E.U.T.)**	The Tash International “310 MHz Remote Control Transmitter”
FCC ID:	NTQSICARE310-1
In Accordance With:	**FCC Part 15, Subpart C** For Low Power Transmitters Operating Periodically In The Band 40.66 - 40.77 MHz And Above 70 MHz
Tested By:	KTL Ottawa Inc. 3325 River Road, R.R. 5 Ottawa, Ontario K1V 1H2
Authorized By:	
	R. Grant, Wireless Group Manager
Date:	
Total Number of Pages:	24

Table of Contents

Section 1. Summary of Test Results 3

Section 2. Equipment Under Test (E.U.T.) 5

Section 3. Transmission Requirements 7

Section 4. Radiated Emissions 12

Section 5. Occupied Bandwidth 15

Section 6. Frequency Tolerance Devices in the Frequency Band 40.66 - 40.77 MHz 17

Section 7. Periodic Alternate Field Strength Requirements 18

Section 8. Powerline Conducted Emissions 19

Section 9. Block Diagrams 20

Section 10. Test Equipment List 22

ANNEX A Restricted Bands A1

Section 1. Summary of Test Results

Manufacturer:	Tash International Inc.
Model No.:	8400
Serial No.:	597006-S3640-X1
Date Received In Laboratory:	September 9, 1999
KTL Identification No.:	Item #1

General: **All measurements are traceable to national standards.**

These tests were conducted on a sample of the equipment for the purpose of demonstrating compliance with Part 15, Subpart C, Paragraph 15.231. All tests were conducted using measurement procedure ANSI C63.4-1992. Radiated emissions are made on an open area test site. A description of the test facility is on file with the FCC.

☒ New Submission ☒ Production Unit

☐ Class II Permissive Change ☐ Pre-Production Unit

D	S	C

Equipment Code

THIS TEST REPORT RELATES ONLY TO THE ITEM(S) TESTED.

THE FOLLOWING DEVIATIONS FROM, ADDITIONS TO, OR EXCLUSIONS FROM THE TEST SPECIFICATIONS HAVE BEEN MADE.
See " Summary of Test Data".

NVLAP LAB CODE: 100351-0

It is recommended that the margin of compliance be improved to allow for manufacturing tolerances.

TESTED BY: _____ DATE: _____
Kevin Carr, Technologist

TESTED BY: _____ DATE: _____
Glen Westwell, Technologist

KTL Ottawa Inc. authorizes the above named company to reproduce this report provided it is reproduced in its entirety and for use by the company's employees only.

Any use which a third party makes of this report, or any reliance on or decisions to be made based on it, are the responsibility of such third parties. KTL Ottawa Inc. accepts no responsibility for damages, if any, suffered by any third party as a result of decisions made or actions based on this report. This report applies only to the items tested.

Summary Of Test Data

Name of Test	Paragraph Number	Results
Transmission Requirements	15.231(a)	Complies
Radiated Emissions	15.231(b)	Complies
Occupied Bandwidth	15.231(c)	Complies
Frequency Tolerance	15.231(d)	Not Applicable
Periodic Alternate Field Strength Requirements	15.231(e)	Not Applicable
Powerline Conducted Emissions	15.207	Not Applicable

Footnotes For N/A's:

Test Conditions:

Indoor Temperature: 23 °C
Humidity: 42 %

Outdoor Temperature: 23 °C
Humidity: 42 %

Section 2. Equipment Under Test (E.U.T.)

General Equipment Information

Frequency Range: 310 MHz (Fixed)

Operating Frequency(ies) of Sample: 310 MHz

Type of Emission: L1D

Emission Designator: 72K0L1D

Supply Power Requirement: 2 x AA Batteries

Duty Cycle Calculation:

(1) Sync. Pulse Length = 8.8 mS
Data Pulse Length = 500 µS

Worst Case in 100 mSec

(2) 1 x Sync. Pulse = 8.8 mS
33 x Data Pulse = 16.5 mS
Total RF On Time = 25.3 mS

(3) Duty Cycle Factor (dB)

$$20 \text{ Log} \left(\frac{25.3mS}{100mS} \right) = -11.9 \text{ dB}$$

Configuration of the Equipment Under Test

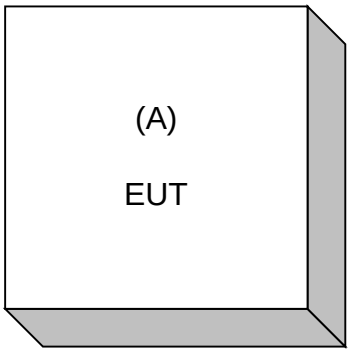

Section 3. Transmission Requirements

NAME OF TEST: Transmission Requirements	PARA. NO.: 15.231(a)
TESTED BY: Kevin Carr & Glen Westwell	DATE: September 30, 1999

Minimum Standard:

15.231(a) Continuous transmissions such as voice, video or data transmissions are not permitted.

15.231(a)(1) A manually operated transmitter shall employ a switch that will automatically deactivate the transmitter within not more than 5 seconds after being released.

15.231(a)(2) A transmitter activated automatically shall cease transmission within 5 seconds of activation.

15.231(a)(3) Periodic transmissions at regular pre-determined intervals are not permitted. However polling or supervisory transmissions to determine system integrity of transmitters used in security or safety applications are allowed if the periodic rate of transmission does not exceed one transmission of not more than one second duration per hour for each transmitter.

15.231(a)(4) Intentional radiators which are employed for radio control purposes during emergencies involving fire, security, and safety of life, when activated to signal an alarm, may operate during the pendency of the alarm.

Test Results: Complies.

Test Data: Compliance was determined by verification of technical specifications and a functional test on the equipment.

Rationale for Compliance with Transmission Requirements

15.231(a)(1) : Transmitter is deactivated after 500 mSec.

15.231(a)(2) : Not Applicable

15.231(a)(3) : Does not transmit at regular, pre-determined intervals.

15.231(a)(4) : Does not operate continuously.

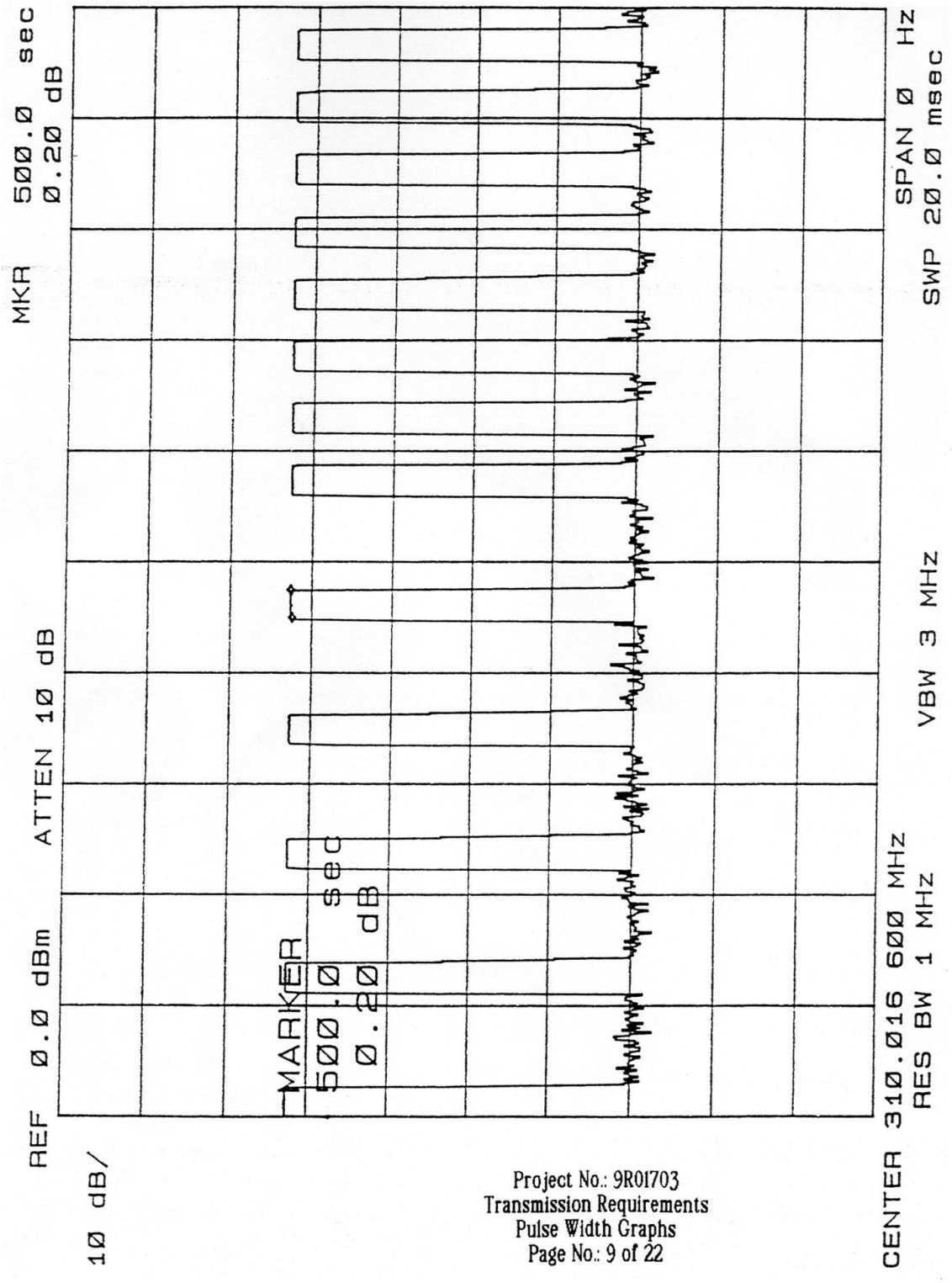

Project No.: 9R01703
Transmission Requirements
Pulse Width Graphs
Page No.: 9 of 22

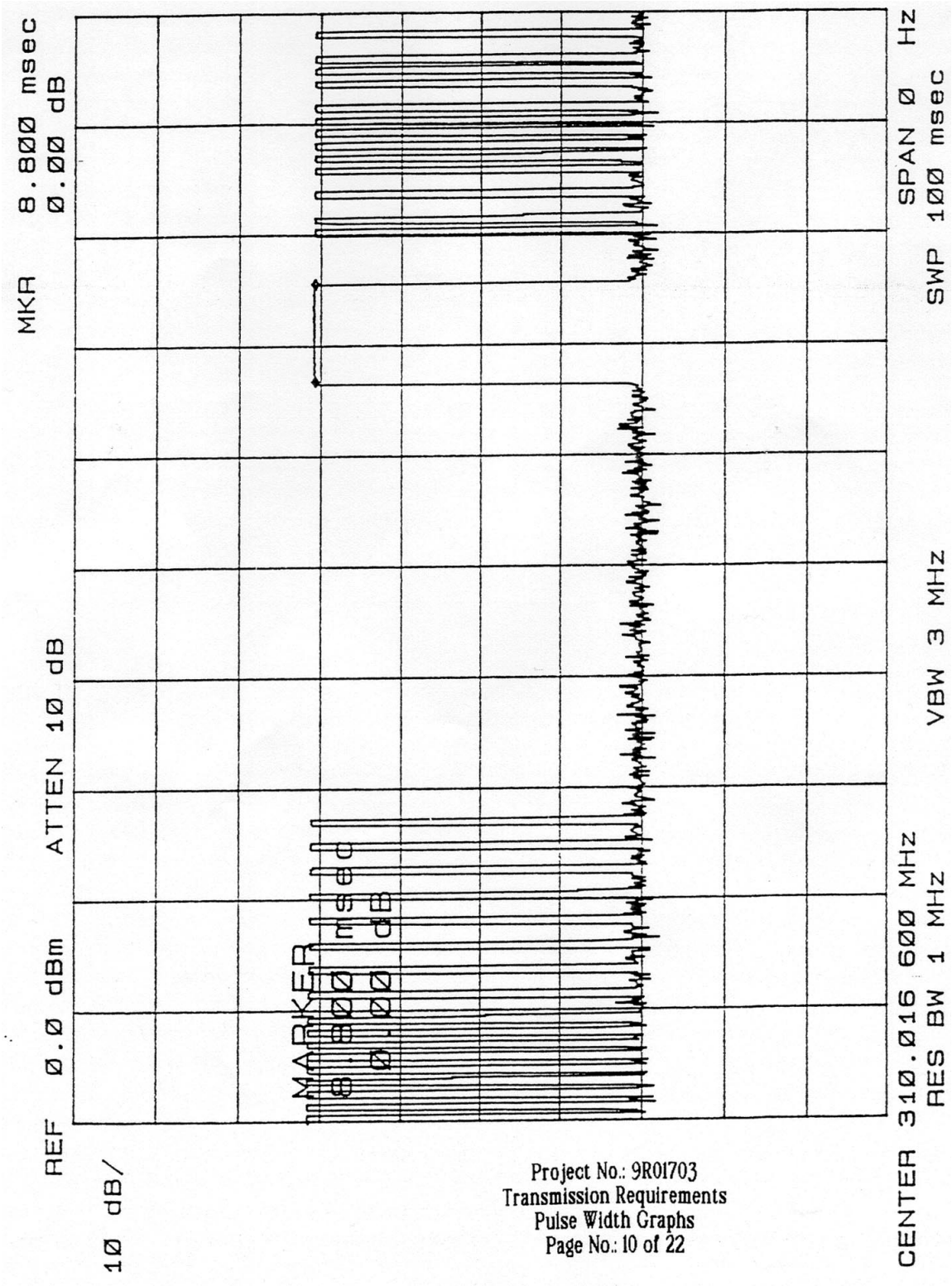

Project No.: 9R01703
Transmission Requirements
Pulse Width Graphs
Page No.: 10 of 22

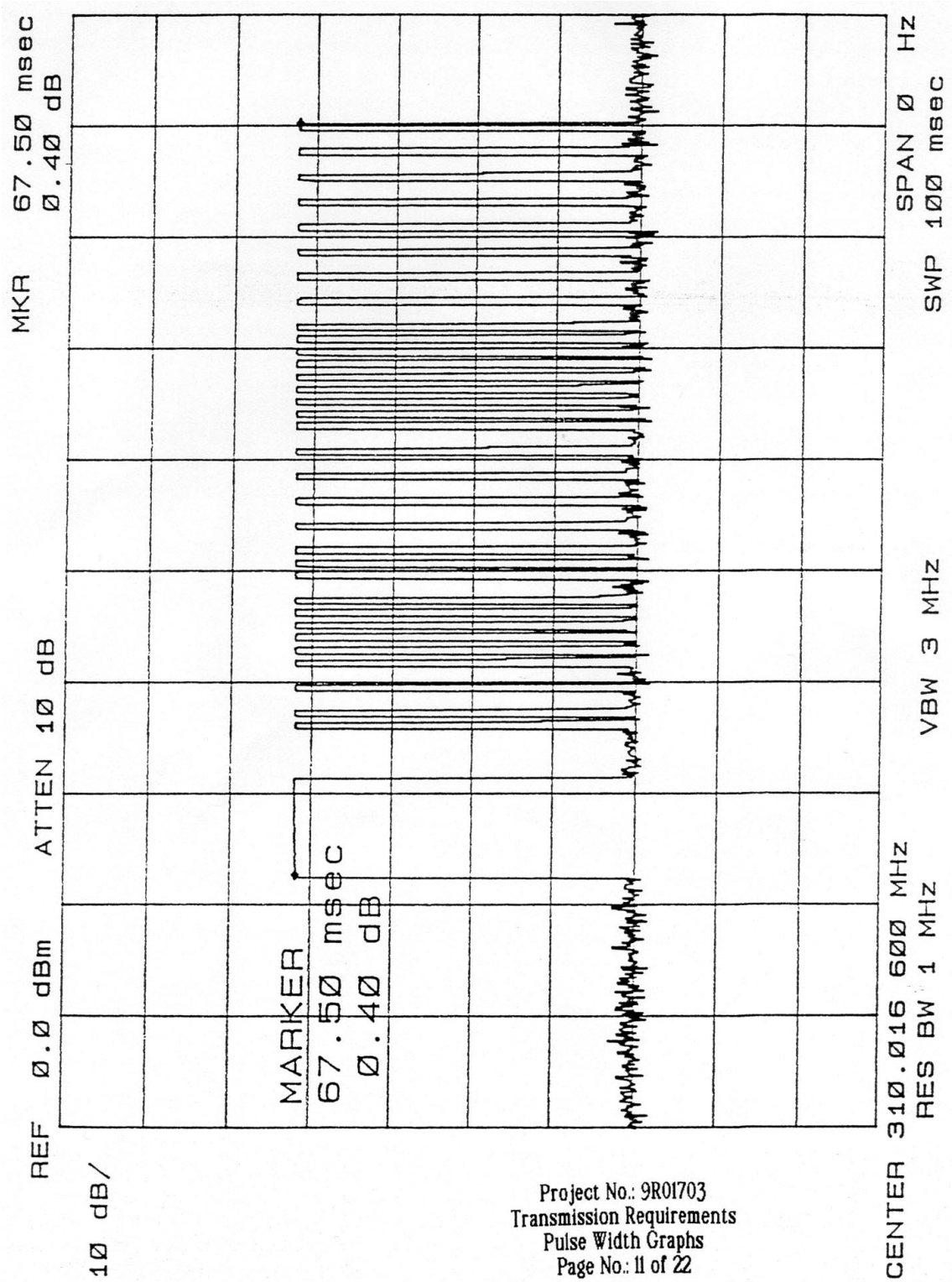

Project No.: 9R01703
Transmission Requirements
Pulse Width Graphs
Page No.: 11 of 22

Section 4. Radiated Emissions

NAME OF TEST: Radiated Emissions	PARA. NO.: 15.231(b)
TESTED BY: Glen Westwell	DATE: September 29, 1999

Minimum Standard:

Permissible Field Strength Limits (Momentarily Operated Devices

Fundamental Frequency (MHz)	Field Strength of Fundamental Microvolts/Meter at 3 meters; (watts)	Field Strength of Unwanted Emissions Microvolts/Meter at 3 meters; (watts)
40.66 - 40.70	2,250	225
70-130	1, 250	125
130-174	1,250 to 3,750*	125 to 375
174-260 (note 1)	3,750	375
260-470 (note 1)	3,750 to 12,500*	375 to 1,250
Above 470	12,500	1,250

Notes:

# Use quasi-peak or averaging meter.	*For 130 - 174 MHz: FS (microvolts/m) = (56.82 x F) - 6136*
** Linear interpolation with frequency F in MHz*	*For 260 - 470 MHz: FS (microvolts/m) = (41.67 x F) - 7083*

Any emissions that fall within the restricted bands of 15.205 shall not exceed the following limits:

Frequency (MHz)	Field Strength (µV/m @ 3m)	Field Strength (dB @ 3m)
30 - 88	100	40.0
88 - 216	150	43.5
216 - 960	200	46.0
Above 960	500	54.0

Test Results: Complies. The worst-case emission level is 73 dBµV/m @ 3m at 310 MHz. This is 2.3 dB below the specification limit.

Test Data: See attached table.

Above 1 GHz a spectrum analyzer and low noise amplifier are used to measure emission levels. The spectrum analyzer resolution bandwidth was set to 1 MHz and video bandwidth was 3 MHz.

In the case of handheld equipment, the E.U.T. is rotated in three planes to obtain worst-case results.

Test Data - Radiated Emissions

Test Distance (meters) : 3		Range: A Tower		Receiver: ESVP		RBW(kHz): 120		Detector: Q-Peak			
Freq. (MHz)	**Ant. ***	**Pol. (V/H)**	**Ant. HGT. (m)**	**Table (deg.)**	**RCVD Signal (dBµV/m)**	**Ant. Factor (dB)****	**Amp. Gain (dB)*****	**Duty Cycle (dB)**	**Field Strength (dBµV/m)**	**Limit (dBµV/m)**	**Margin (dB)**
310.01	E/D3	V			62.7	22.1		-11.9	72.9	75.3	2.4
310.01	E/D3	H			62.8	22.1		-11.9	73.0	75.3	2.3
620.02	E/D4	V			24.8	30.7		-11.9	43.6	55.3	11.7
620.02	E/D4	H			20.0	30.7		-11.9	38.8	55.3	16.5
930.03	E/D4	V			12.2	35.5		-11.9	35.8	55.3	19.5
930.03	E/D4	H			14.2	35.5		-11.9	37.8	55.3	17.5
1240.04	Hrn2	V			18.2	27.8		-11.9	34.1	55.3	21.2
1240.04	Hrn2	H			15.1	27.8		-11.9	31.0	55.3	24.3
1550.0	Hrn2	V			65.0	28.7	-39.7	-11.9	42.1	54.0	11.9
1550.0	Hrn2	H			56.5	28.7	-39.7	-11.9	33.6	54.0	20.4
1860.0	Hrn2	V			73.0	30.3	-44.7	-11.9	46.7	55.3	8.6
1860.0	Hrn2	H			67.1	30.3	-44.7	-11.9	40.8	55.3	14.5
2170.0	Hrn2	V			73.3	31.1	-46.6	-11.9	45.9	55.3	9.4
2170.0	Hrn2	H			68.5	31.1	-46.6	-11.9	41.1	55.3	14.2
2480.0	Hrn2	V			68.0	31.2	-46.0	-11.9	41.3	55.3	14.0
2480.0	Hrn2	H			62.8	31.2	-46.0	-11.9	36.1	55.3	19.2
2790.0	Hrn2	V			59.6	32.0	-45.0	-11.9	34.7	54.0	19.3
2790.0	Hrn2	H			64.8	32.0	-45.0	-11.9	39.9	54.0	14.1
3100.0	Hrn2	V			62.6	33.2	-43.8	-11.9	40.1	55.3	15.2
3100.0	Hrn2	H			63.1	33.2	-43.8	-11.9	40.6	55.3	14.7

Notes:
B/C = Biconical, B/L = Biconilog, L/P = Log-Periodic, H = Horn, D/P = Dipole
* Re-measured using dipole antenna.
** Includes cable loss when amplifier is not used.
*** Includes cable loss.
( ) Denotes failing emission level.

Radiated Photographs (Worst Case Configuration)

Front View

Rear View

Section 5. Occupied Bandwidth

NAME OF TEST: Occupied Bandwidth	PARA. NO.: 15.231(c)
TESTED BY: Kevin Carr & Glen Westwell	DATE: September 20, 1999

Minimum Standard: 15.231(c) The bandwidth of the emission shall be no wider than 0.25% of the center frequency for devices operating above 70 MHz and below 900 MHz. For devices operating above 900 MHz, the emission shall be no wider than 0.5% of the center frequency. Bandwidth is determined at the points 20 dB down from the modulated carrier.

Test Results: Complies. See attached graph.

Test Data: See attached graph.

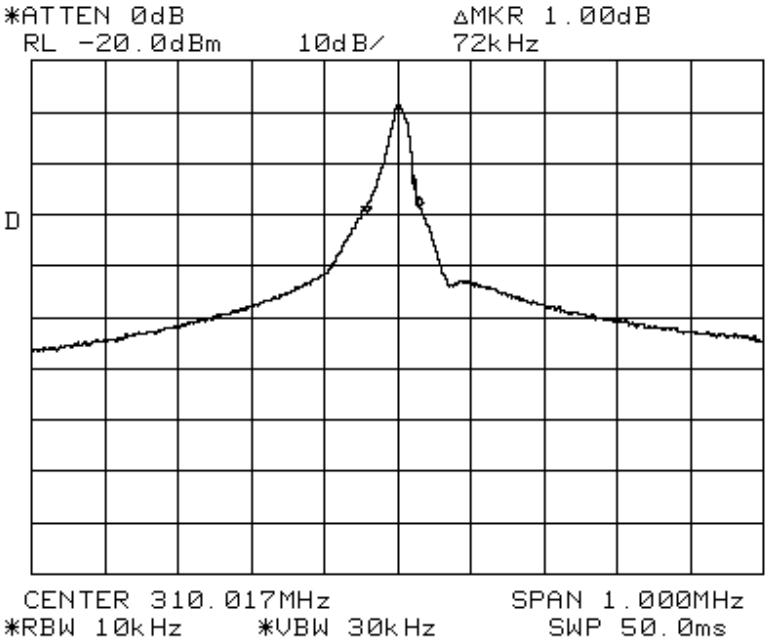
*ATTEN 0dB
ΔMKR 1.00dB
RL -20.0dBm
10dB/
72kHz
D
CENTER 310.017MHz
SPAN 1.000MHz
*RBW 10kHz
*VBW 30kHz
SWP 50.0ms

Section 6. Frequency Tolerance
Devices in the Frequency Band 40.66 - 40.77 MHz

NOT APPLICABLE

NAME OF TEST: Frequency Tolerance	PARA. NO.: 15.231(d)
TESTED BY:	DATE:

Minimum Standard: 15.231(d) For devices operating within the frequency band 40.66 - 40.70 MHz, the bandwidth of the emission shall be confined within the band edges and the frequency tolerance of the carrier shall be ±0.01%. This frequency tolerance shall be maintained for a temperature variation of -20 degrees to +50 degrees C at normal supply voltage and for a variation in the primary power supply voltage from 85% to 115% of the rated supply voltage at a temperature of 20 degrees C. For battery operated equipment, the equipment tests shall be performed using a new battery.

Test Results: Complies/Does Not Comply. See attached graph and data.

Test Data: See attached graph.

Section 7. Periodic Alternate Field Strength Requirements

NAME OF TEST: Periodic Alternate Field Strength Requirements	PARA. NO.: 15.231(e)
TESTED BY:	DATE:

NOT APPLICABLE

Minimum Standard: 15.231(e) Intentional radiators may operate at a periodic rate exceeding that specified in paragraph (a) of this section and may be employed for any type of operation including operation prohibited in paragraph (a) of this section provided the intentional radiator complies with the provisions of paragraphs (b) through (d) of this section, except the field strength table in paragraph (b) of this section is replaced by the following.

Fundamental Frequency (MHz)	Field Strength of Fundamental (microvolts/meter)	Field Strength of Spurious Emissions (microvolts/meter)
40.66 - 40.70	1,000	100
70 - 130	500	50
130 - 174	500 to 1,500	50 to 150
174 - 260	1,500	150
260-470	1,500 to 5,000	150 to 500
Above 470	5,000	500

In addition, devices operated under the provisions of this paragraph shall be provided with a means for automatically limiting operation so that the duration of each transmission shall not be greater than one second and the silent period between transmissions shall be at least 30 times the duration of the transmission but in no case less than 10 seconds.

Test Results: Complies/Does Not Comply.

Test Data: See attached table.

Section 8. Powerline Conducted Emissions

NAME OF TEST: Powerline Conducted Emissions	PARA. NO.: 15.207
TESTED BY:	DATE:

Minimum Standard:

Frequency(MHz)	**Maximum Powerline Conducted Voltage**	
	µV	**dBµV**
0.45 - 30.0	250	48

NOT APPLICABLE

Test Results: Complies/Does Not Comply. See attached graphs and table.

Test Data: See attached graphs and table.

Method Of Measurement: (Procedure ANSI C63.4-1992)

Measurements were made using a spectrum analyzer with 10 kHz RBW, Peak detector. Any emissions that are close to the limit are measured using a test receiver with 10 kHz bandwidth, CISPR Quasi-Peak detector.

Broadband emissions are identified by switching the receiver detector function from Quasi-Peak to Average. If the amplitude of the emission drops by 6 dB or more then the emission is classified as broadband and the Quasi-Peak level is reduced by a factor of 13 dB.

All emissions within 10 dB of limit have been recorded.

Section 9. Block Diagrams

Conducted Emissions

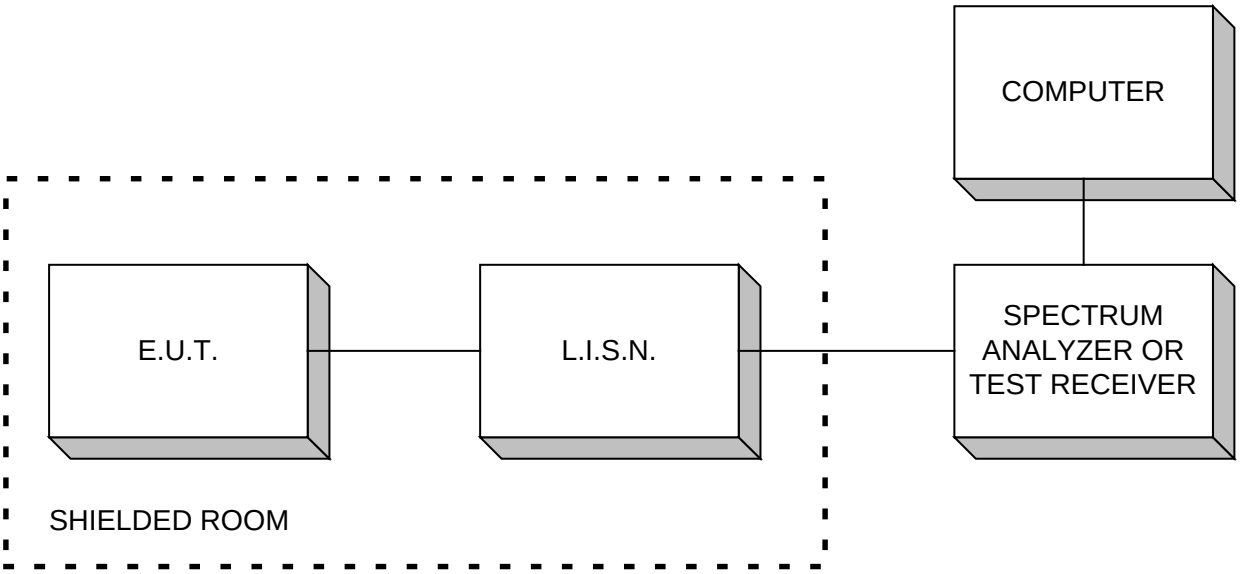

Radiated Prescan

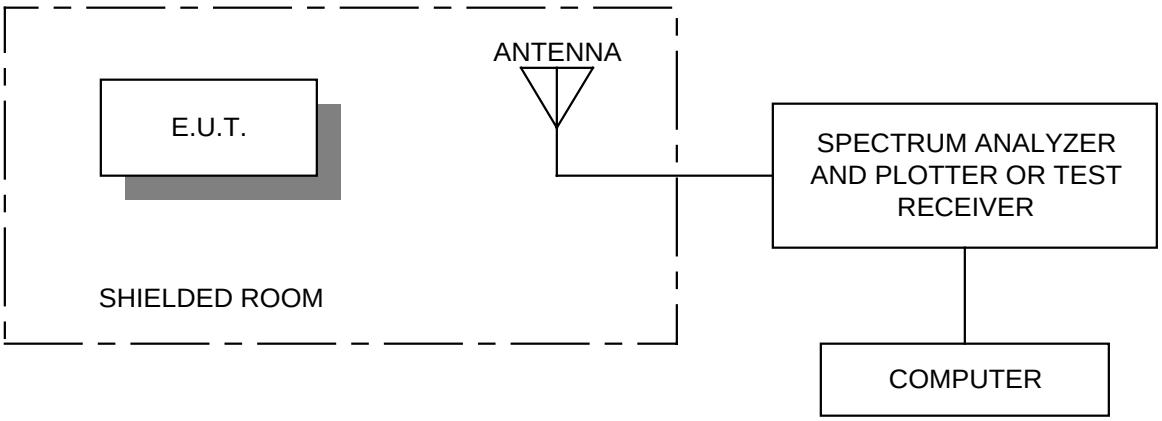

Outdoor Test Site For Radiated Emissions

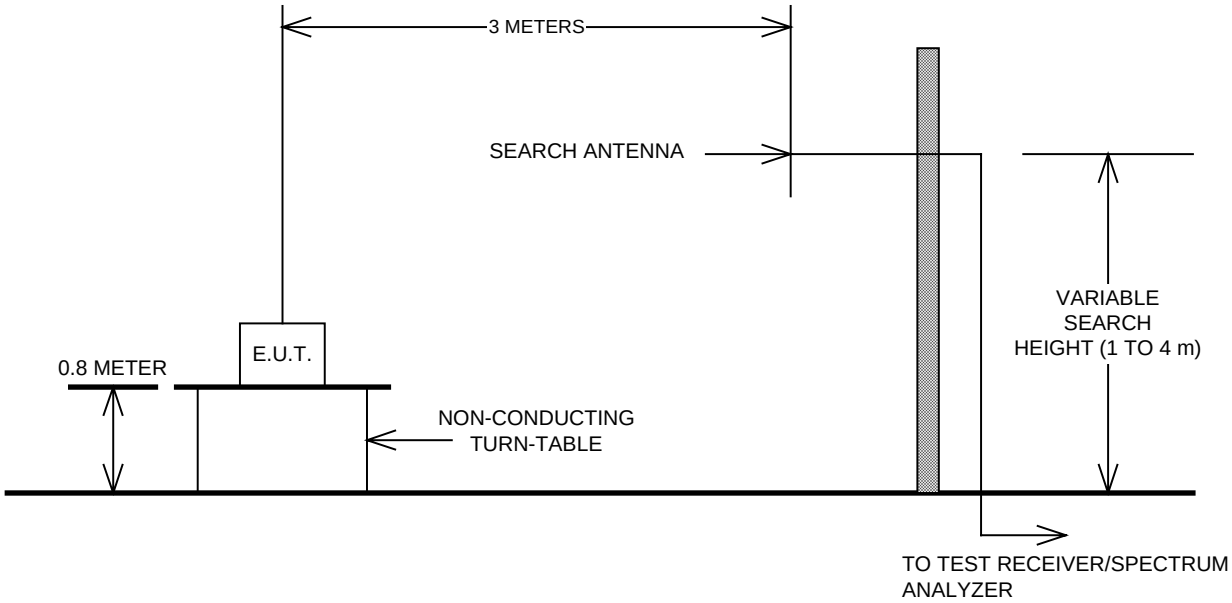

The spectrum was searched up to the 10th harmonic of the fundamental frequency of operation.

Occupied Bandwidth

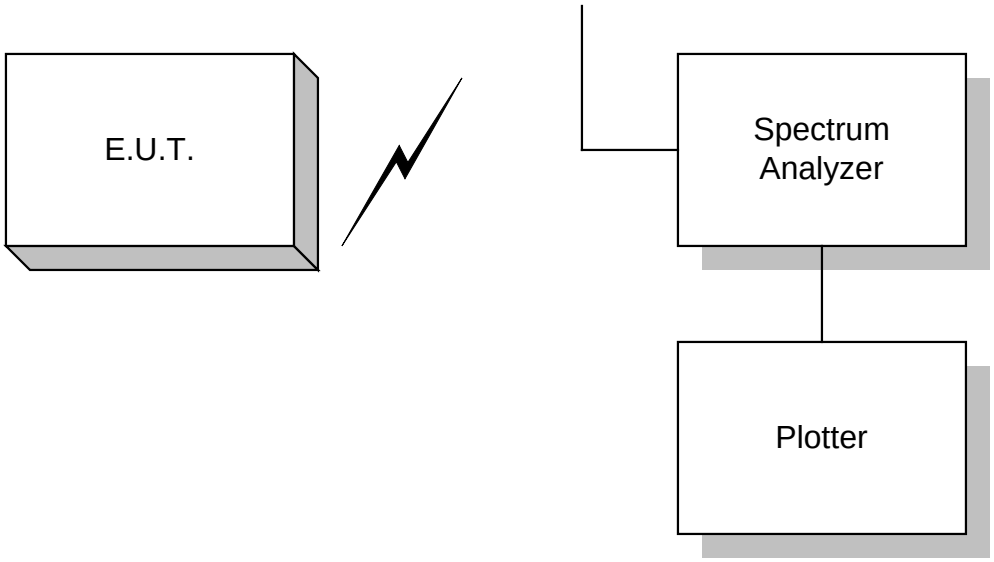

Section 10. Test Equipment List

CAL CYCLE	EQUIPMENT	MANUFACTURER	MODEL	SERIAL	LAST CAL.	NEXT CAL.	
1 Year	Spectrum Analyzer-**1**	Hewlett Packard	8566B	2311A02238	Oct. 22/98	Oct. 22/99	
1 Year	Spectrum Analyzer Display-**1**	Hewlett Packard	8566B	2314A04759	Oct. 22/98	Oct. 22/99	
1 Year	Quasi-peak adapter-**1**	Hewlett-Packard	85650A	2043A00302	Oct. 22/98	Oct. 22/99	
1 Year	Receiver	Rohde & Schwarz	ESVP	892661/014	Mar. 29/99	Mar. 29/00	
2 Year	Horn Antenna	EMCO #2	3115	4336	Oct. 30/97	Oct. 30/99	
1 Year	Dipole Antenna Set	EMCO	3121C	1029	Nov. 18/98	Nov. 18/99	
1 Year	Low Noise Amplifier	Avantek	AWT-8035	1005	Aug. 4/98	Aug. 4/99	

NA: Not Applicable
NCR: No Cal Required
COU: CAL On Use

ANNEX A

RESTRICTED BANDS

Section A Restricted Bands of Operation

(a) Except as shown in paragraph (d) of this section , only spurious emissions are permitted in any of the frequency bands listed below:

MHz	MHz	MHz	GHz
0.090 - 0.110	16.42-16.423	399.9-410	4.5-5.15
0.49 - 0.51	16.69475-16.69525	608-614	5.35-5.46
2.1735 - 2.1905	16.80425-16.80475	960-1240	7.25-7.75
3.020 - 3.026	25.5-25.67	1300-1427	8.025-8.5
4.125 - 4.128	37.5-38.25	1435-1626.6	9.0-9.2
4.17725 - 4.17775	73-74.6	1645.5-1646.5	9.3-9.5
4.20725 - 4.20775	74.8-75.2	1660-1710	10.6-12.7
6.215 - 6.218	108-121.94	1718.8-1722.2	13.25-13.4
6.31175 - 6.31225	123-138	2220-2300	14.47-14.5
8.291 - 8.294	149.9-150.05	2310-2390	15.35-16.2
8.362 - 8.366	156.52475-156.52525	2483.5-2500	17.7-21.4
8.37625 - 8.38675	156.7-156.9	2655-2900	22.01-23.12
8.41425 - 8.41475	162.0125-167.17	3260-3267	23.6-24.0
12.29 - 12.293	167.72-173.2	3332-3339	31.2-31.8
12.51975 - 12.52025	240-285	3345.8-3358	36.43-36.5
12.57675 - 12.57725	322-335.4	3600-4400	Above 38.6
13.36 - 13.41			