```
<protocolProp name="Delay"
type="Integer">100</protocolProp>
```

Note that the settings for the serial port can also be reset in this file. The default values are:
- Port Number: COM1
- Baud Rate : 57600
- Data Bits : 8
- Stop Bits : 1
- Parity : NONE

1.1 RFID overview

1.1.1 RFID operating principles

Radio-frequency identification (RFID) is an auto-identification technology, similar in concept to other common auto-identification technologies such as bar code scanners, magnetic strip readers, or magnetic ink readers. Like other auto-ID techniques. RFID associates an identifying number with a physical object. In RFID, the unique identifying number (***UID*** or, as will be explained below, ***EPC***) is incorporated in a special system, an ***RFID transponder*** (often simply known as a ***tag***). An ***RFID Interrogator*** (usually known as a ***reader***) is used to obtain the UID from the tag using electromagnetic waves. The tag is usually attached to a physical object that is to be identified, such as a carton, a pallet, or a container filled with a product.

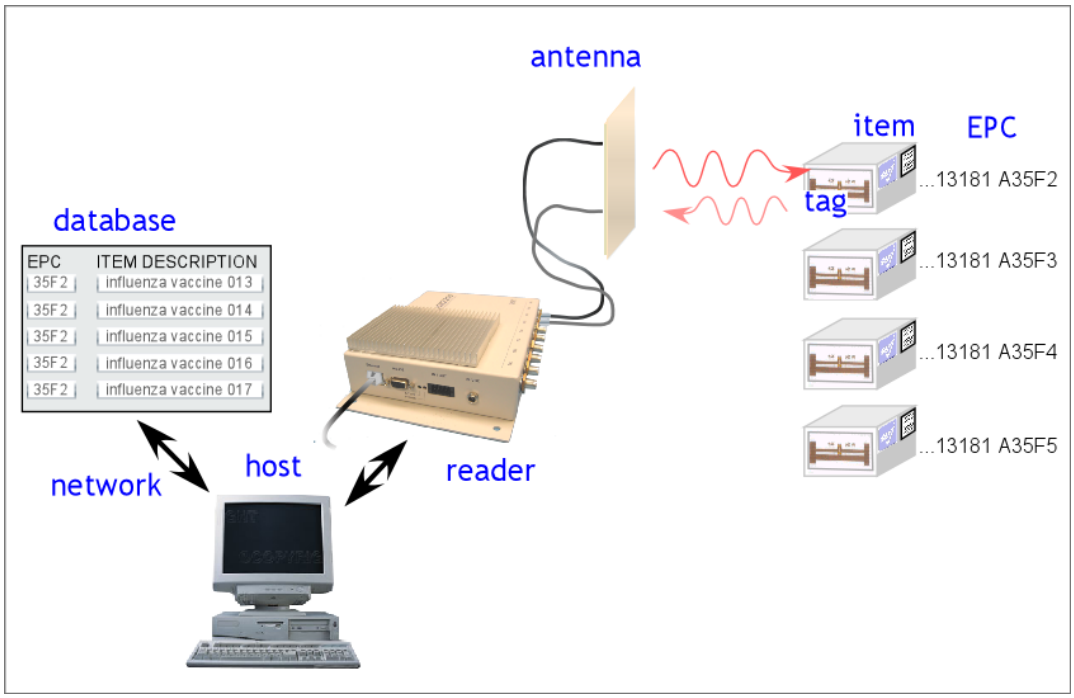

In order to reduce the cost of the tag, most tags do not incorporate a battery or other source of power, but instead operate using DC power derived from the radio frequency signal they receive from the reader. In addition, low-cost tags do not incorporate a radio transmitter, but instead use varying reflection of the received signal from the reader to communicate back to it. Such tags are known as ***passive*** tags. Since passive tags are the most common type, the description below will assume their use. Variants are also available: ***semi-active*** tags incorporate a battery to power the integrated circuit, but still use reflected waves (***backscattering***) to communicate with the reader. ***Active*** tags incorporate both a battery and a radio transmitter, and are much more costly than passive tags, but also more versatile.

RFID systems can operate at different radio frequencies. The frequency chosen has important effects on the way tags and readers interact and on what applications are appropriate.

Low-frequency (***LF***) tags and readers typically operate at 125 or 134 KHz. This is a very low frequency, with a wavelength of about 2.4 kilometers (1.5 miles). Low-frequency radiation is very effective at penetrating water and living tissues, so that LF tags can be used to identify livestock. However, because the tags and readers are very much smaller than a wavelength, they cannot radiate effectively, so LF readers and tags depend on ***inductive coupling*** to operate. In effect, the reader and tag form the primary and secondary windings of a transformer. The tag must be in close proximity to the reader antenna to be read; read ranges are comparable to the size of the reader antenna, typically a few 10's of cm (5-10 inches) for a small reader antenna. Because the induced voltage per coil winding is also very small at these frequencies, the tags are composed of many turns of wire, often wound around a ferrite core to increase coupling. Since there is no radiated power, there is usually very little issue with regulatory compliance in using LF tags and readers.

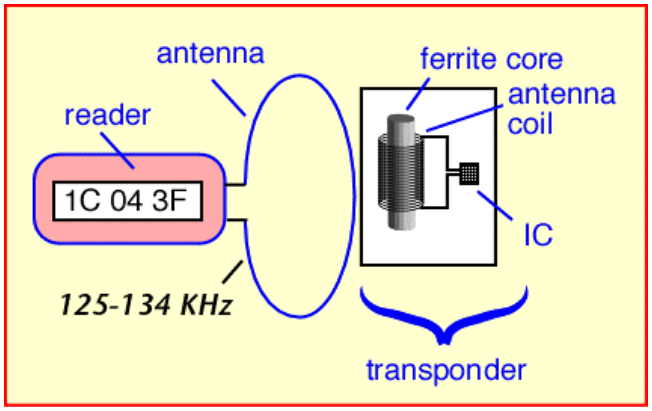

High-frequency (***HF***) tags and readers operate at 13.56 MHz. This frequency is available for industrial use in most jurisdictions worldwide. The wavelength is about 20 meters (60 feet), still larger than most reader or tag antennas, so inductive coupling is used as in LF tags and readers. However, the higher frequency provides a larger induced voltage, so the reader usually uses a single-turn coil, and transponders typically incorporate 3-5 turns of wire. HF transponders can be readily constructed on a flat

plastic substrate the size of a credit card, forming ***Smart Cards*** widely used as identification badges and credit cards with enhanced functionality. Typical read range varies from a few cm to a meter or so (a few inches to 3 feet), again dependent on reader antenna size.

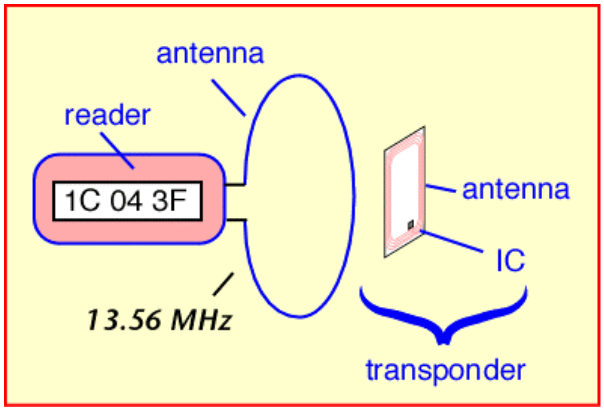

When long read range is required, ***ultra-high-frequency*** (***UHF***) tags and readers are appropriate. The Apollo-series are UHF RFID readers. UHF systems typically operate at frequencies between 860 and 960 MHz, depending on the regulatory jurisdiction. In the United States, unlicensed operation is allowed in the Industrial, Scientific, and Medical (ISM) band at 902-928 MHz. The wavelength at these frequencies is about 33 cm (13 inches), so the reader and tags are roughly comparable in size to the wavelength. The reader antenna creates a radiated electromagnetic wave, which can propagate long distances. UHF tags and readers can thus exploit ***radiative coupling*** to achieve read ranges not available for LF or HF devices. Read range for passive UHF tags can be as much as 10 meters (30 feet) with an appropriate directional antenna; longer ranges are achievable using semi-passive tags.

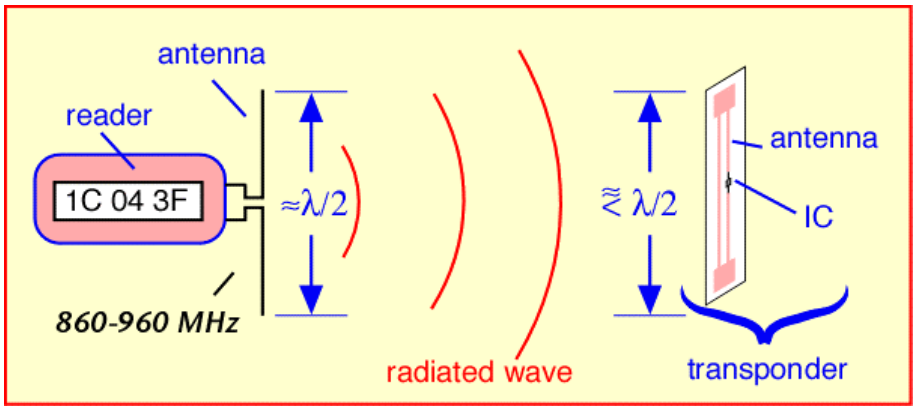

RFID readers and tags operating in the microwave ISM band at 2.4-2.45 GHz are also widely used. The 2.4-2.45 GHz band is available for unlicensed operation in most jurisdictions worldwide. At this frequency the wavelength is about 12 cm (5 inches). Very small tags can be used in the 2.45 GHz band, but because of the consequent small antennas, the amount of power collected by a tag is reduced in comparison to UHF tags. Passive 2.4 GHz tags have typical read ranges of around 1 to 3 meters (3 to 10 feet).

1.1.2 RFID vs. bar code

RFID tags and readers perform functions similar to those of bar codes and bar code scanners. How do they differ? When should one use bar codes and when should RFID tags be employed? There are four key distinctions to keep in mind:

- **COST**: bar codes can be printed on the surface of many existing packages at very low cost. Separate bar-coded tags with adhesive backing are also inexpensive. Bar code scanners of various types are widely available at modest cost, as is software to integrate bar code scanning into standard business processes and enterprise planning. RFID (particularly at UHF and microwave frequencies) is a relatively less widespread technology, and RFID tags are manufactured objects containing an integrated circuit and antenna structure. RFID tags today cost significantly more than bar codes, the exact value depending on type and quantity, though the cost of RFID tags is falling rapidly as economies of scale are applied. Low-cost readers such as the MPR5000 are just becoming available, but most readers are still expensive proprietary devices. When cost is the only or a dominant issue, bar codes should be used.

- **INFORMATION**: Bar codes usually contain very limited information. Bar codes printed on mass-produced packaging inevitably identify only the type of product and not the unique individual package in hand. Bar codes containing unique identifying information such as serial numbers can be used, but must be individually printed, raising cost, and separate codes are usually needed to identify model number and the particular instance of the model. RFID tags generally allow a 64-bit or 96-bit UID, the latter being more than adequate to identify manufacturer, model or part number, and the specific physical instance of the model to which the tag is attached. More advanced tags can contain additional user memory, which can be written to in the field, allowing for versatile storage of information conveniently attached to an object when necessary. When information storage capacity is a concern, RFID tags may be superior to bar codes.

- **AUTOMATION**: Bar codes require an optical line of sight between the reading device and the code, and may also require that the code or reader be properly oriented. In many cases this means that individual objects or tags must be handled by a human being in order to be reliable read. UHF RFID tags can be read from a relatively long distance, and the path between the reader and the tag can be visually obstructed (though certain obstructions will also affect radio frequency devices, as will be discussed in more detail below). Bar codes are normally read one at a time, particularly on randomly-oriented or stacked objects, whereas tens to hundreds of RFID tags can be simultaneously present in the field of the reader and read 'simultaneously' from the viewpoint of the user. RFID techniques permit automated information handling to a much greater extent than bar codes.

- **ROBUSTNESS**: Bar codes cannot be read if the printed code becomes dirty, defaced, or excessively bent or curled. RFID tags are robust to dirt, paint, ink, and to some extent mechanical damage, and can be read (albeit with reduced range) when misoriented or mechanically distorted. RFID tags are tougher than bar codes.

1.1.3 RFID system components

An RFID system is composed of (at least) a ***reader***, one or more ***antennas***, and one or more compatible tags. In many applications it may be necessary or helpful to create human-readable labels incorporating RFID tags; in this case an RFID ***tag printer*** is also very useful. While standalone RFID systems are appropriate in some circumstances, more commonly the RFID reader is just a sensor that needs to interact with a larger information system in order to be useful. ***Middleware*** is used to enable the interaction between the reader and the network, and to filter and aggregate the large amounts of data the reader collects into a more useful compendium provided to the network.

1.1.3.1 Reader

A UHF RFID reader is a radio transmitter and receiver. Most readers are capable of interrogating passive tags, and are equipped with certain features uniquely suited to use for communicating with passive RFID tags. A reader reading passive tags simultaneously communicates with the tag population and provides power to operate the integrated circuits contained in the tags. During transmission, the reader transmits an ***amplitude-modulated*** signal that is received by tags within range. The transmit power is generally limited by regulatory requirements; for example, in the United States, no more than 1 watt average RF power may be transmitted. Modulation rate varies depending on the standard employed, but is typically a few tens of kilobits per second for UHF tags. Special coding of the transmitted data is employed to maximize the power available to the tags.

Once the tags have been powered up and received their instructions from the reader, they take turns responding with their UID. Because of the unique requirements of the backscatter radio system used by passive and semi-passive tags, the reader must continue to transmit a non-modulated (***continuous-wave*** or ***CW***) signal while it listens for tag responses. The tags employ the CW signal to continue to provide power to the tag electronics, and modulate the impedance of their own antennas in order to vary the signal reflected back to the reader. The reader must extract the very small tag reflections from all the other reflected signals it encounters. The default configuration of the Stationary portal readers uses one antenna to transmit, and a second (typically physically adjacent) antenna to receive the backscattered signal. Up to four such pairs can be connected to the reader. The reader can switch from one antenna pair to the other in order to cover differing physical regions, such as the high and low portions of a doorway, or to avoid missing tags because of local losses of signal strength – ***fading*** – that are sensitive to the exact position of the antenna and other objects. Any signal from the transmitting antenna that leaks into the receiving antenna will compete with the small reflected signal from the

tag; that is, it is desirable to have good ***isolation*** between the transmit and receive antennas. Isolation will be degraded if conductive (metallic) objects are placed close to the antennas. For best results, antennas should always be mounted in accordance with manufacturer's recommendations, and free of obstructions for at least 1 meter in the read direction.

In the United States, readers are required by law to ***hop*** randomly from one frequency channel to another when operating within the ISM band, residing for no longer than 0.4 seconds at any one frequency. In addition, regulations forbid coordination of hopping patterns between collocated transmitters. When configured for US operation, the Apollo series uses 50 channels separated from one another by 500 KHz, and operates in each channel for 50 to 400 milliseconds. During hops from one channel to another, the RF output is turned off.

1.1.3.2 Antennas

Antennas are the intermediaries between the voltages sent and received by the reader, and the electromagnetic waves used to provide power to and communicate with the tags. Three critical characteristics of antennas used in RFID systems are their ***maximum directive gain***, ***polarization***, and ***match.***

Electromagnetic radiation consists of a traveling electric and magnetic field. The electric field has a direction at any point in space, normally perpendicular to the direction of propagation of the wave; this direction is the ***polarization*** of the wave. For linearly polarized radiation, the direction of the electric field is constant as the wave propagates in space. Configurations can also be constructed in which the direction of the electric field rotates in the plane perpendicular to the direction of propagation as the wave propagates: this is known as ***circular polarization***.

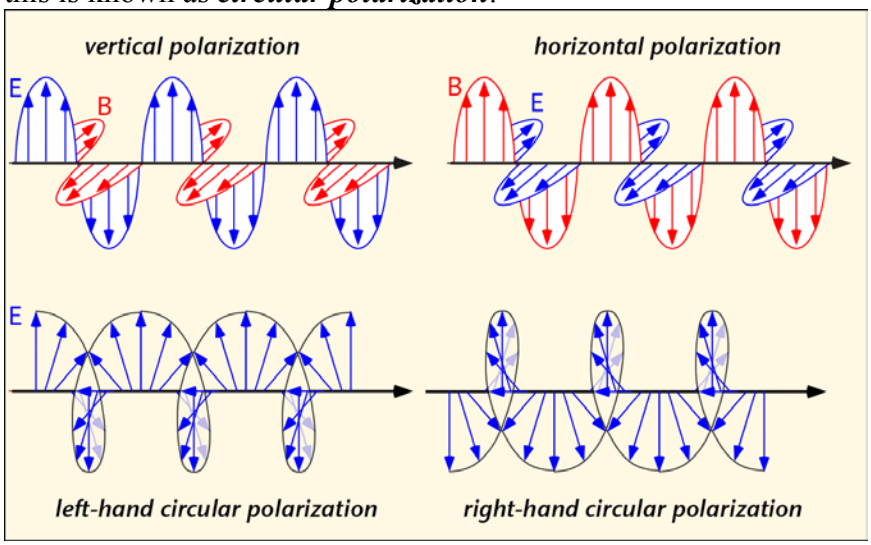

The best power transfer between antennas is obtained when their polarizations match. Thus the best read range is obtained from e.g. a vertically polarized reader antenna transmitting to a vertically polarized tag antenna. This is an excellent scheme to employ when the orientation of the tag during reading can be controlled. However, if the

orientation of the tag can vary, the tag could accidentally be perpendicular to the polarization of the reader antenna – a horizontal tag with a vertically polarized signal in shown in the diagram below – in which case very little power is received, and the tag will not be read. When the tag orientation is unknown or uncontrollable, a circularly polarized reader antenna should be used. Vertical tags, horizontal tags, and tags rotated to intermediate angles can then be read with equal facility. However, this versatility is not without cost. A circularly polarized signal can be regarded as the combination of a horizontal and vertical signal, each containing half of the transmitted power. A linearly polarized tag antenna only receives its own polarization, and thus half the transmitted power, being of the wrong polarization, is wasted. The read range of a circularly polarized antenna with a linearly polarized tag is reduced from what could be obtained with a linearly polarized reader antenna, if the tag orientation is known.

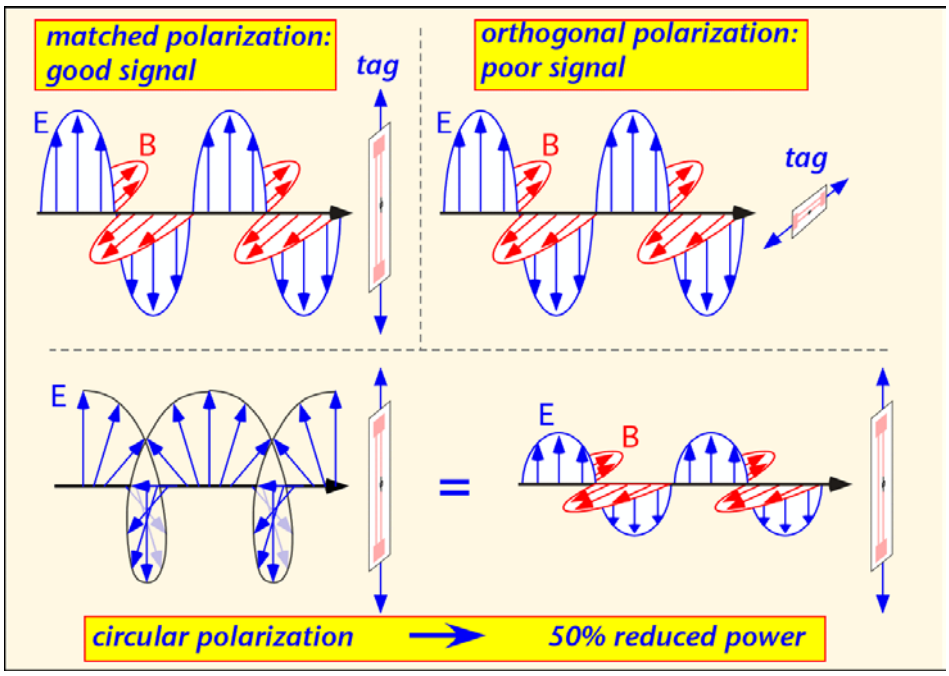

In discussing antennas, it is often convenient to speak of an ***isotropic*** antenna that radiates power equally in all directions, but no such antenna actually exists. Real antennas always transmit more effectively in some directions than others. The ratio of the power density in the direction of highest power to the average power radiated in all directions is the ***maximum directive gain***, often simply referred to as the ***gain*** of the antenna. It is important to note that antennas are passive devices and don't actually add any power to the signal provided by the reader: gain in this context refers to the increased power received by a device in the best direction relative to the average of all directions. Gain varies tremendously for different antenna designs. A very common antenna, the ***dipole*** antenna, is fairly close to an isotropic radiator: the dipole sends no radiation along its axis, but transmits equally in all directions perpendicular to the axis and nearly as well to directions at more than a few degrees away from the axis. The gain of a dipole antenna – the ratio of the power density along the direction of maximum radiated power to the

average of all directions – is only about 1.7:1 or 2.3 dB[1]. Note that gain is often reported as 'dBi', the 'i' denoting the use of an ideal isotropic antenna as the reference. A dipole antenna is a good choice when all tags in any direction along a plane are to be read. Radiation from a dipole is polarized along the axis of the dipole; thus, a tag whose antenna is also a dipole should be oriented in the same direction as the reader antenna in order to be read effectively.

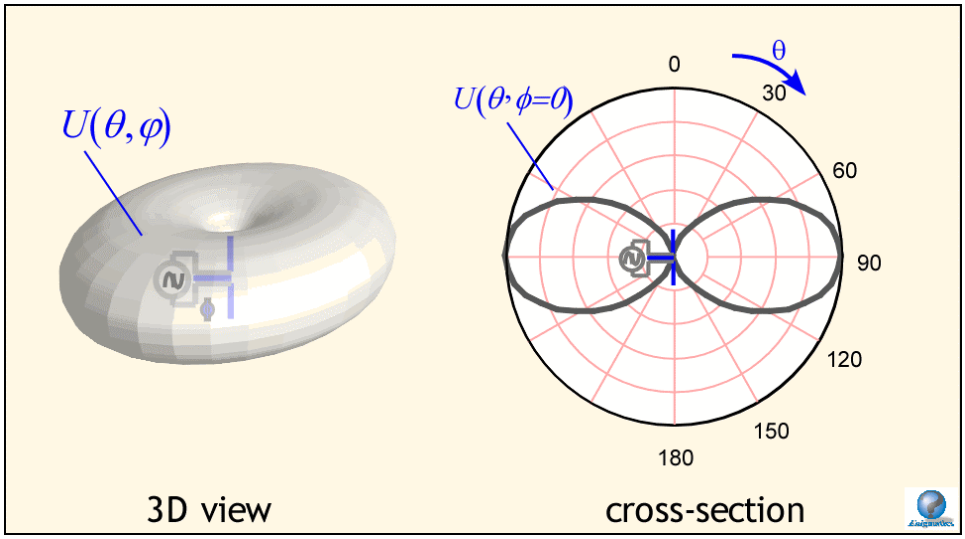

The recommended antenna antenna for the Stationary portal reader, WJCI model AN120, provides a pair of circularly-polarized panel antennas in a single package, with excellent transmit-receive isolation and return loss. This antenna provides about 6 dBi of gain on both transmit and receive.

In principle, antenna gain could be increased to increase read range. However, in most jurisdictions, the maximum gain employed in unlicensed operation is limited by regulation. For example, in the United States, the FCC limits the ***effective isotropic radiated power*** (EIRP, the product of the actual power and the antenna gain) to 4 watts. The Stationary portal reader, which is rated at 1 Watt output, cannot use an antenna with more than 6 dBi of gain.

Note that the recommended antennas have been specifically approved for use with the Stationary portal reader in the United States by the FCC. FCC regulations (title 47 part 15) require that antennas be approved for use with specific radio communications devices, unless they are installed by a professional installer, and that in all cases the combination of antenna and radio device must operate within regulatory constraints.

External antennas are generally connected to the reader using flexible coaxial cables and connectors. It is important to select these cables and connectors appropriately for the

[1] dB = deciBel is a method of logarithmically describing the ratio of two power levels; P_{21} (dB) = 10 $\log_{10}$ (P_2/P_1). Thus 10 dB represents a factor of 10 in power.

application. The stationary portal readers use mini-UHF connectors on the reader; the recommended AN120 antennas are equipped with type-N connectors. Both are mechanically robust and convenient. When the antenna must be mounted a long distance from the cable (more than 3 meters), a large-diameter low-loss cable, such as RG-213 or RG214 should be used.

The electrical impedance presented by an antenna is a complex function of the frequency, the antenna shape, and the near-antenna environment. Antennas are carefully designed so that the electrical impedance of the antenna is well-matched to the impedance of the device to which they are connected. For example, the Stationary portal readers will generally employ a cable with 50 ohm characteristic impedance to connect the reader to the antenna. In order for the power from the reader to be effectively transferred to the antenna, the antenna must have an electrical impedance close to 50 ohms, with little capacitance or inductance, at the frequency of operation. As noted previously, conductive objects or some other materials such as aqueous liquids placed close to an antenna will change its impedance and thus degrade its match to the cable. For best read range, keep such obstructions away from the antenna in directions of maximum directive gain.

1.1.3.3 Tags

A UHF RFID tag typically consists of a specialized integrated circuit (IC) attached to an antenna structure fabricated on an inexpensive flexible plastic substrate. The antenna and substrate designs vary considerably to meet the needs of specific applications. Tags may be configured to respond primarily to one linear polarization, to have some response to both orthogonal directions, or to provide multiple antennas with capability for switching the IC to the best direction at any given moment.

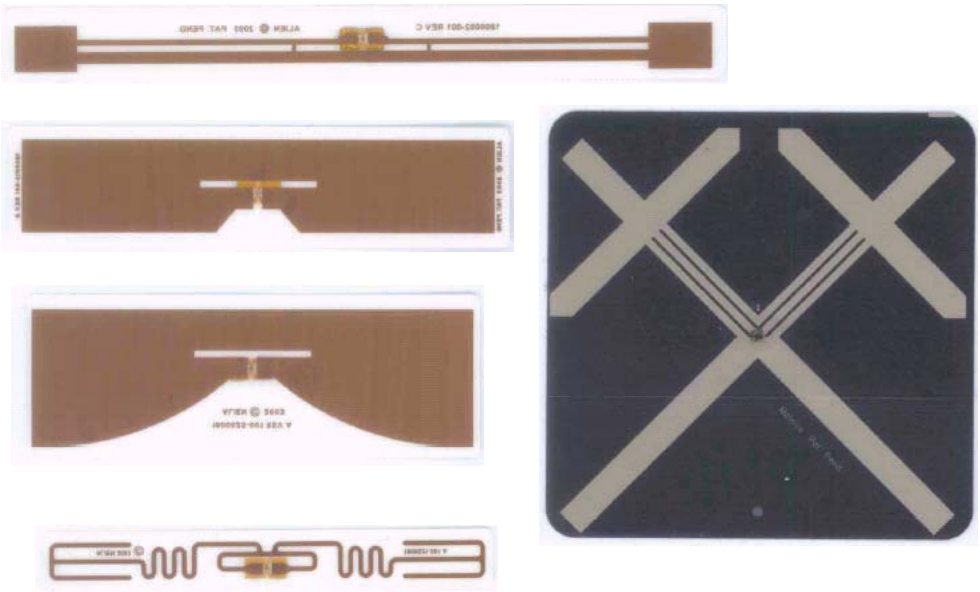

The natural size for an antenna structure for a given wavelength λ of electromagnetic radiation is about half of the wavelength: $\lambda/2$. Since the wavelength is about 33 cm at 915 MHz, the natural size for a simple antenna is about 16 cm (6.5 inches). Half-wave antennas radiate and receive effectively, and tend to have convenient nearly-resistive impedances: they are ***resonant***. However, for many applications such an antenna is excessively large. Many tags are designed with antennas that are smaller than $\lambda/2$. While such antennas may be configured to provide good impedance matching, some coMpromise in radiation efficiency is inevitable: in general, smaller antennas will not perform as well as half-wavelength antennas. Tag antennas may be bent or curved to conserve space and allow some response to multiple linear polarizations; however, in this case only the regions of the antenna that are along the polarization direction contribute to the received signal, so again the received power is reduced. Note that most tag antennas are incorporated onto a flat plastic substrate and are thus themselves in a plane; like a dipole, the tag antenna does not transmit and cannot receive signals whose direction of propagation lies in this plane. A tag cannot be seen by the reader when it is viewed on edge.

Tag antennas are also sensitive to their local environment, a fact that is of particular import since tags are meant to be attached to objects. Many common materials, such as paper and most plastics, have little effect on microwave propagation; tags can be attached readily to cardboard or plastic boxes or containers without affecting their operation. However, large metal objects have important effects both on the local electric fields and the impedance of nearby antennas. Tag antennas cannot be attached directly to metal plates or boxes without suffering degraded performance. Tag antennas spaced 5 mm to 1 cm (0.2 to 0.4 inch) from a metal surface can perform acceptably, particularly if designed for near-metal service. Aqueous fluids (water and water-containing materials such as milk, juices, most cleaning fluids, etc.) also have a strong effect on local field intensity and may affect tag antenna impedance as well, depending somewhat on the tag design. Again the best operation of a tag will be obtained if it is kept at least 1-2 cm from bodies of aqueous fluid.

The received signal from a tag antenna is connected to an integrated circuit. Tag IC's are very small (to keep the cost of manufacturing low), and are typically embedded in a plastic coating for mechanical protection. The IC contains a rectifying circuit to convert the received 900 MHz signal to a DC voltage used to power the remainder of the IC. Variations in the received power are converted to variations in a DC voltage, providing the IC with a method of sensing information transmitted by the reader. The IC can also modify the impedance it presents to the antenna, by using a transistor as a switching element, thus causing a variation in the signal reflected back to the reader and enabling the tag to communicate back to the reader without needing its own radio transmitter.

The necessity of powering the tag is an important limitation on the read range. Tags require a few 10's of microwatts of RF power to operate, limiting the range to about 10 meters with the recommended antenna pair. When linearly-polarized reader antennas are used, read range may be degraded by misorientation of the tag. Most indoor environments have very complex propagation characteristics, with the transmitted signal reflecting off numerous obstacles such as walls, floors, other tagged objects, people, vehicles, desks, tables, etc. As a consequence, the signal strength can vary by a factor of 10 or more between two neighboring locations separated by about a half-wavelength (16 cm or 5 inches): this phenomenon is known as ***fading***, and is encountered in most wireless communications systems. A tag with the misfortune to find itself in a fade may fail to power up, while a tag farther from the reader but happily located in a region of maximum signal strength responds readily. Thus there is no reliable simple correlation between tag location the likelihood of reading a tag. The exact signal strength is sensitive to the positions of all reflecting / diffracting objects in proximity to the read region (including people and their tools and toys) to an accuracy of much less than a wavelength, and thus in practice is impossible to predict or control.

The best approach to deal with fading is the use of ***diversity***: intentional variations in the propagation environment to ensure that each tag finds itself in a region of decent signal strength at some point. Diversity can be achieved by alternately employing two antennas in slightly different positions (displaced by at least a half a wavelength); the Stationary portal readers can be operated in this fashion by the four antenna pairs in succession. Alternatively, the location of the tags relative to the reader antenna(s) can be varied; this beneficial effect occurs naturally when the tags to be read are moving on a conveyorized belt, or are rotated as a pallet of boxes is wrapped with plastic in preparation for transport.

1.1.3.4 System integration

An RFID reader can collect large amounts of data, often much more than would have been obtained by a human being employing a bar code reader. To convert this data into knowledge may require considerable filtering. For example, if a fork lift driver moves a pallet out of a door, then returns to the facility to correct an error in some paperwork, and finally drives out through the door to the truck again, the reader may take three inventories of the same pallet, but it is rarely desirable to treat the resulting information as suggesting that the same items were shipped three times. On the other hand, if the pallet is returned by a hand truck, and the operator's colleague stands in front of the reader antenna during the transfer, the reader may fail to record some or all of the tags. A successful RFID implementation requires the integration of appropriate procedures for human workers to follow in placing and using tags and objects carrying them, careful installation of reader hardware, and the right ***middleware*** to convert the raw data from the reader into information useful for operating the business.

Procedures are intimately connected with the planned usage for the RFID tags. Are the tags attached to individual items, boxes, or a pallet or other large container? Are the items to be inventoried on a shelf, counted as they move along a conveyorized transport belt, or tracked through a door? Can the orientation of objects to be read be controlled or must the reader account for randomly-oriented tags, and does this include tags placed end-on to the reader? What is the desired read range? Do the objects to be labeled contain metals or aqueous fluids, and if so can the tags be placed sufficiently far from these disturbing influences to be read? Is the necessary read reliability 90%, 99%, or 99.9%? Given the answers to such questions, the implementer can then develop procedures to ensure that the desired reliability is achieved.

As might be inferred from the discussion in section 1.4.3.2, selection and placement of reader antennas is a critical consideration for a successful installation. The stationary portal readers can be connected to up to four external antenna pairs; these antennas should be configured to reliably cover the region over which tags are to be read. For example, at a doorway, one directional antenna may be placed < 1 meter (3 feet) from the ground and the other around 2 meters (6 feet) high, thus providing good coverage of the whole door area. When many readers are used in close proximity, consideration should be given to minimizing interference between readers; for example, configurations in which one reader antenna looks directly at a neighboring reader's antenna should be avoided. It may be useful to provide reflective or absorbtive shielding between reader installations.

The lower levels of middleware, dealing directly with the reader population, must incorporate very specific knowledge about the use procedures and environment in which the tags are being read, and are likely to be highly customized for each application. This software must provide filtering and aggregation capabilities to ensure that the data that is forwarded to the enterprise information systems is correctly categorized and representative of what is happening to the physical inventory of objects being tracked. Once this has been accomplished, the integration of a properly filtered and aggregated dataset with a standard enterprise resource planning package such as those available from vendors like Oracle or SAP is a reasonably well-established function, with the necessary customization provided by a large number of third-party vendors.

1.1.4 RFID standards

Bar codes for commercial products are standardized worldwide under the auspices of the Uniform Code Council and EAN International. In September of 2003, these organizations joined with the AutoID Labs headquartered at the Massachusetts Institute of Technology to form EPC Global Inc., chartered with the standardization of a generalization of the bar code system, the ***Electronic Product Code*** (EPC), as well as the creation of software and hardware standards to support the use of RFID systems in implementing identification of objects by means of EPC's. This work is intended to complement existing and ongoing activities at the ***International Standards Organization***

(ISO), where many standards for the operation of LF and HF RFID systems have already been defined.

1.1.4.1 EPC Global

EPC Global is creating a set of standards intended to provide a robust infrastructure for the proliferation of RFID technology:

- EPC Tag data: the standards define various formats for the unique identifier (EPC) for each tag, to be consistent with existing EAN/UCC standards: serialized version of the EAN.UCC Global Trade Item Number (GTIN®), the EAN.UCC Serial Shipping Container Code (SSCC®), the EAN.UCC Global Location Number (GLN®), the EAN.UCC Global Returnable Asset Identifier (GRAI®), the EAN.UCC Global Individual Asset Identifier (GIAI®), and a General Identifier (GID).
- UHF Tags: partial specifications for first-generation 'class 0' (factory-write-only) and 'class 1' (field-write allowed) tags are public. A second-generation standard for class 1 tags is in progress at the time of this writing.
- Physical Markup Language: In order to provide a standardized framework for exchange of EPC data between organizations, EPC Global is defining a ***physical markup language*** (PML) based on the popular extended markup language (XML) widely employed in web communications. In addition, standards for ***object name servers*** (ONS), analogous to the domain name servers employed to facilitate communications over the Internet, are being defined. Finally, specifications for the ***EPC Information Service*** (***EPCIS)*** that will provide modular, standardized RFID middleware functions are also being defined.

Tags compliant with the class 0 and class 1 EPC standards, manufactured by such vendors as Alien Technology, Matrics (now a division of Symbol Technologies), and Impinj, are already in common commercial use. Stationary portal readers will read both class 0 and class 1 and can write to class 0+ and class 1 tags. Firmware upgrades will allow the stationary portal readers to read and write second-generation class 1 tags once they become available. Firmware upgrades will also support ISO1800-6B tags (described below).

1.1.4.1.1 EPC Class 0 Summary

In this section we provide a very brief introduction to the operation of class 0 tags. Further information may be obtained from the document "Draft protocol specification for a 900 MHz Class 0 Radio Frequency Identification Tag", dated 2/23/03, available from the EPC Global Inc. web site.

Class 0 tags are factory-programmed and thereafter read-only. Each tag contains a nominal 64-bit EPC and a 16 bit ***cyclic redundancy check*** (CRC) in non-volatile memory. (Tags with 96-bit EPC's are also allowed, and are provided for in the Apollo-

series firmware.) The CRC is independently re-calculated by the reader when the EPC is read, and checked against that provided by the tag to check for errors in the read.

When more than one tag is in the field of the reader, the reader employs a binary-tree traversal to resolve possible collisions and individually address each tag (***singulation***). The traversal starts at the beginning of an ID string and chooses one of the two possible branches (first bit = 0 or first bit = 1). All tags whose first bit agrees with the reader's choice remain in the traversal, while those with the opposite bit become temporarily inactive waiting for the next traversal. When only one tag responds at any stage of the traversal, that tag can be read. Proceeding in this fashion over the whole ID string (if necessary), the reader must inevitably find all tags in the field if their ID's are unique and all the tags are able to follow the traversal.

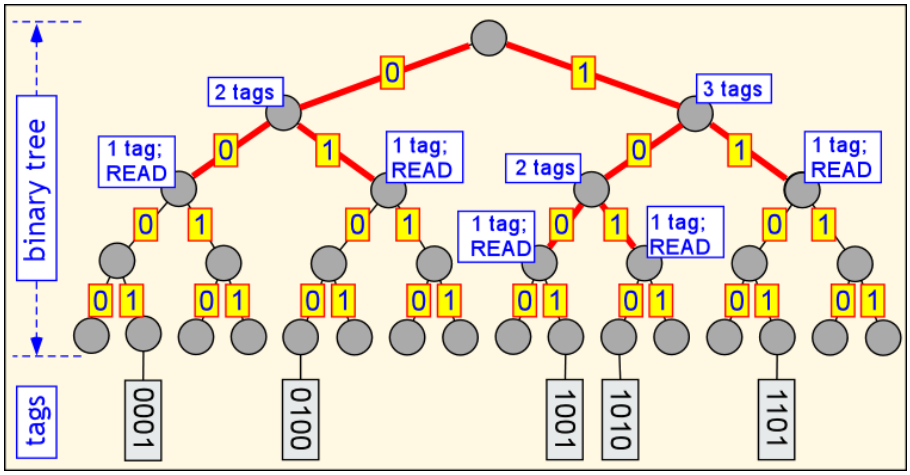

In general, there are much less than 2^{64} tags in the field in most practical cases. Thus it is often unnecessary and wastefully slow to use the 64-bit EPC to aid in singulation. The protocol requires each tag to provide two other ID's in addition to the 64-bit EPC. These ID's, known as ID0 and ID1, are both pseudo-random 16-bit numbers. ID0 is generated by each tag upon request by the reader. ID1 is programmed into each tag at the time of manufacture. In this nomenclature, the EPC is known as ID2.

During traversal, each tag still in the traversal backscatters the next bit of its active ID to the reader, and listens for the reader to confirm that bit before remaining in the traversal. This procedure provides some simple error checking. However, if the EPC (ID2) is being used for singulation, it has the consequence that the reader sends some or all the bits of each tag's EPC. Since it is much easier to intercept high-powered reader transmissions than the low-power tag reflections, if security of tag EPC's is a concern, ID2 should not be used for singulation. Note that once a tag is singulated, the EPC can be read without echo by the reader.

The protocol also allows for ***filtering***, in which the inventory process is performed only on tags whose ID2 contains a fixed bit string provided by the reader. Filtering can be used to inventory only tags assigned to a particular manufacturer or a particular product type.

Amplitude-modulation is used to transmit information from the reader to the tag. In order to maximize the power simultaneously provided to the tag, special coding is employed to ensure that the reader power is high most of the time. The particular scheme employed here is known as ***pulse-interval modulation***. In each symbol, a short low-power pulse (1/4 of the bit time) denotes a binary 0, and a longer low-power pulse (half of the total bit time) denotes a binary 1. Thus the average transmitted power for a string with an equal number of 1's and 0's is 5/8 of the CW power. A long low-power pulse (3/4 of the bit time) denotes a special 'NULL' character, which appears infrequently and thus has little effect on the average power delivered to the tag. In the United States, a data rate of 80 kilobits per second (Kbps) is used. In Europe, a lower 16 Kbps rate is employed in order to operate within a narrower allowed channel.

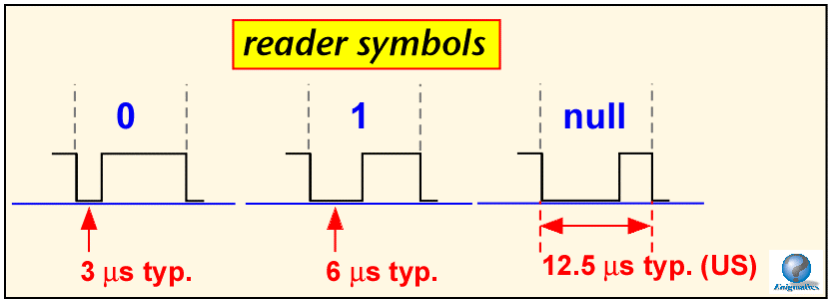

Communication from the tag to the reader employs a sub-carrier modulation, in which the tag inverts states at a rate much faster than the data rate. In the particular scheme used in this protocol, the tag sends a 2.25 MHz backscattered signal for a binary 0, and 3.25 MHz for a binary 1. Tag backscatter is performed on the 'high' portion of each reader bit. Sub-carrier signaling has two benefits: the reader need only detect transitions of the tag state without regard to the direction of the transition (up or down), and if two or more tags simultaneously backscatter binary 1 and binary 0, the presence of both symbols can be detected by the reader, allowing it to gather some information about the tag population even when collisions are present.

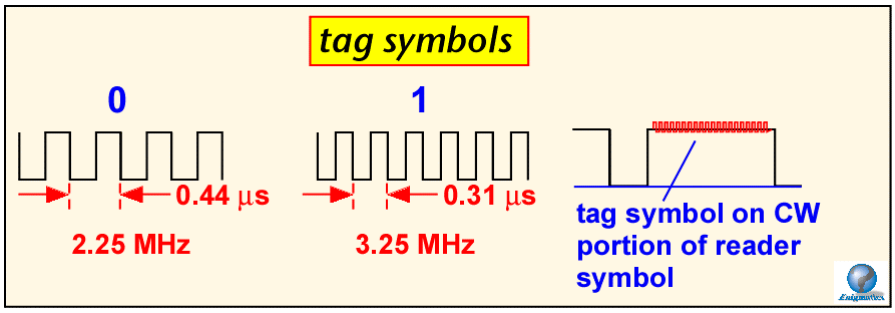

Each time power is turned on, the reader proceeds through a set of steps to initialize the tag IC timing. First, the reader transmits a RESET consisting of 800 µs of CW power. A tag's "ID'd" flag (telling it that it was already read by the reader) may survive a RESET, but in other respects the tag returns to its default state. After the RESET, 8 pulses are used to calibrate the tag internal oscillator to the 2.2 MHz sub-carrier frequency. Finally,

a set of pulses of varying length is transmitted to set the thresholds for distinguishing between 0, 1, and null, and to signal the tag when to begin its transmission.

In the United States, communications devices operating in unlicensed bands must either use direct-sequence or frequency-hopping spreading techniques. The Apollo series products use pseudo-random hopping from one frequency to another. The Class 0 protocol does not require the reader to power down during hops, but the Apollo series stationary reader does in order to minimize spurious radiation. Therefore, a RESET / calibration sequence is necessary after each hop. The time between hops is available for the user to adjust, although regulations require that the transmitter remain on any given frequency for no longer than 400 ms at a time. In Europe, revised regulations allowing 10 channels have been promulgated and it is anticipated that with the passing of time frequency-hopping operation will become the normal means of operation in most European jurisdictions. European regulations will require that the reader ***listen before talking***: that is, the reader must check each putative channel for other active transmitters before beginning its own transmission. Note that the MPR5000/6000/7000 operate at 902-928 MHz and are not approved for use in Region 1 (European) jurisdictions.

Tags have 10 possible states, roughly corresponding to [startup / calibrate], [global commands], [binary tree traversal], and [singulated commands]. Each command is 8 bits long, with an additional parity bit provided for error checking. The tag echoes each bit it receives in order to provide a simple error check and acknowledgement function. Mandatory commands are:

- ResetIDFlag: resets the identified flag to NOT READ; that is, it forces tags to forget whether they have been previously inventoried.
- SetNegotiationPage: this curious terminology is used to describe the choice of ID (ID0, 1, or 2) used for singulation during binary tree traversal.
- SegRegionofOperation: sets the backscatter parameters according to whether the device is operating under FCC or European regulations.
- ForceDormant: tags receiving this command immediately enter the Dormant state. The Dormant state is the default tag turn-on state, exited when a RESET is received.
- ForceMute: tags receiving this command immediately enter the Mute state. In the Mute state, the tags receive data but do not respond until a NULL is received. Tags that have been bypassed during traversal reside in the Mute state until the next traversal begins.
- Read: Read ID1 or ID2 (ID0, being randomly generated at the time of request, has no enduring interest and need not be read from the tag).
- Kill: Permanently disables the tag if a valid argument (passcode) is provided.

1.1.4.1.2 EPC Class 1 Summary

In this section we provide a very brief introduction to the operation of class 1 tags. Further information may be obtained from the document “Candidate Specification 860

MHz – 2500 MHz – Class 1 RFID Air Interface", revision 1.02, available from the EPC Global Inc. web site.

Class 1 tags are nominally factory-programmed but the write operation employs the radio interface and could be performed at manufacture or in the field. It is expected that once the tag is written to, the memory is locked and further write operations are disallowed. Each tag contains a nominal 64 bit or 96-bit EPC and a 16 bit ***cyclic redundancy check*** (CRC) in non-volatile memory. The CRC is independently re-calculated by the reader when the EPC is read, and checked against that provided by the tag to check for errors in the read. Unlike class 0 tags, where the rag responds immediately to each bit sent by the reader, class 1 tags use a more conventional packet-oriented protocol, with the reader transmitting a packet containing commands and data, followed by a response by the tag.

When more than one tag is in the field of the reader, the reader employs a binary-tree traversal to resolve possible collisions and individually address each tag (***singulation***). To begin the traversal, the reader sends a filter string consisting of a pointer location and a bit stream. The pointer location indicates where the bit stream starts in the EPC. Each tag tests the relevant portion of its EPC; those whose bits match the transmitted bit stream then send the next 8 bits of their EPC back to the reader. Filtering is thus incorporated in passing into the protocol. There are eight time slots for response, with the one chosen dependent upon 3 of the reply bits. This time slot mechanism provides some collision resolution and a simple error-checking mechanism. A simplified version of such a traversal is shown in the diagram below. If the reader hears only 1 tag in a given bin, the reader can immediately request that tag's full ID. Note that with this mechanism, the reader may but need not transmit all or much of the tag's EPC. Where security is an issue, large sections of the EPC should not be used as filters.

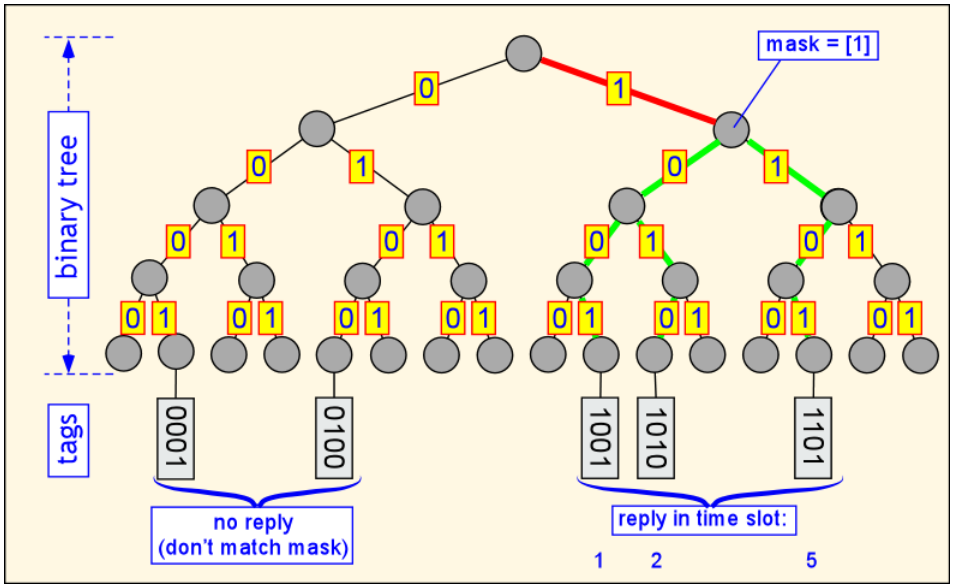

Amplitude-modulation is used to transmit information from the reader to the tag. In order to maximize the power simultaneously provided to the tag, special coding is employed to ensure that the reader power is high most of the time. Class 1 tags use a

pulse-interval modulation scheme quite similar to that employed by class 0 tags. There are two options provided: a base set using a low pulse of 1/8 of a bit time for a binary 0 and 3/8 for a binary 1, and an alternate set using times of ¼ and ½ of a bit time respectively (just like the class 0 symbols). There is no NULL symbol. Thus the average transmitted power for a string with an equal number of base-set 1's and 0's is ¾ of the CW power. In the United States, a data rate of about 62 kilobits per second (Kbps) is typically used. In Europe, a lower 15 Kbps rate is employed in order to operate within a narrower allowed channel.

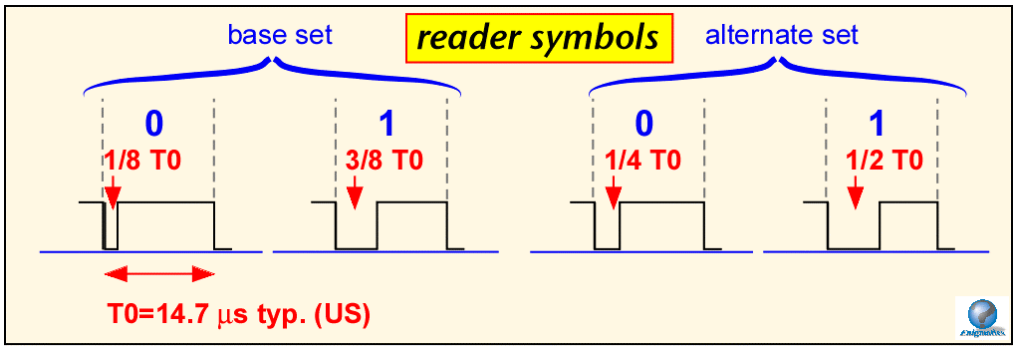

The return link uses a simple form of subcarrier modulation, ***F2F***. Each bit time begins with a transition in the tag state. To transmit a binary 0, the tag adds one transition in the middle of the bit. To transmit a binary 1, 3 additional transitions are employed. (Thus, a string of binary 0's has a fundamental frequency of (1/Tbit), whereas the fundamental frequency of a string of binary 1's is (2/Tbit), hence the name of this coding scheme.) Each tag bit occupies ½ of the time used for a reader bit, so that the nominal data rates are about 140 Kbps in the US and 30 Kbps in Europe.

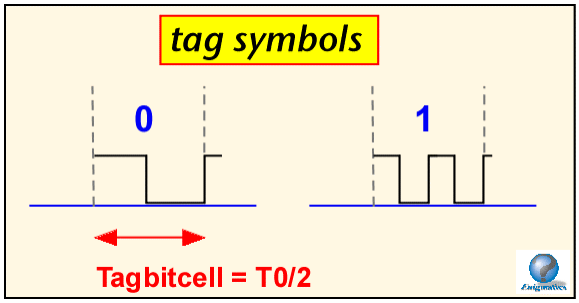

Instead of employing a single long RESET and synchronization for a sequence of exchanges, as is done in class 0, class 1 provides packet-by-packet tag synchronization. Each packets starts with a 64 µs CW period to power up any tags in listening range, followed by data. During binary tree traversal, the reader then sends a binary 1 to mark the edge of a response time slot or 'bin', so the tags have no need to maintain an accurate clock to time the edges of the 8 possible response bins. A tag that response begins its packet with a fixed 8-bit preamble, followed by the next few bits of its EPC, or in the case of a full scroll the remainder of the EPC.

Tags have six possible states: Power Up, Awake, Asleep, Reply, Program , and Dead. Responses to commands depend solely on the current state and not on how the tag arrived there. The basic commands are:

- ScrollID: a tag whose EPC bits match the filter bits responds with its complete EPC
- Quiet: a tag whose EPC bits match the filter bits goes to sleep
- Kill: Permanently disable the tag if a valid argument (passcode) is provided.
- PingID: a tag whose EPC bits match the filter responds with the next 8 bits of its EPC
- Talk: a tag whose EPC bits match the filter bits wakes up
- ScrollallID: all tags hearing this command respond with their full EPC
- Pincscroll: Optional command allowing quick scroll of full ID from any tag that is the sole responder in a given bin.

1.5.4.1.3: EPCGlobal Class1 Gen II Summary

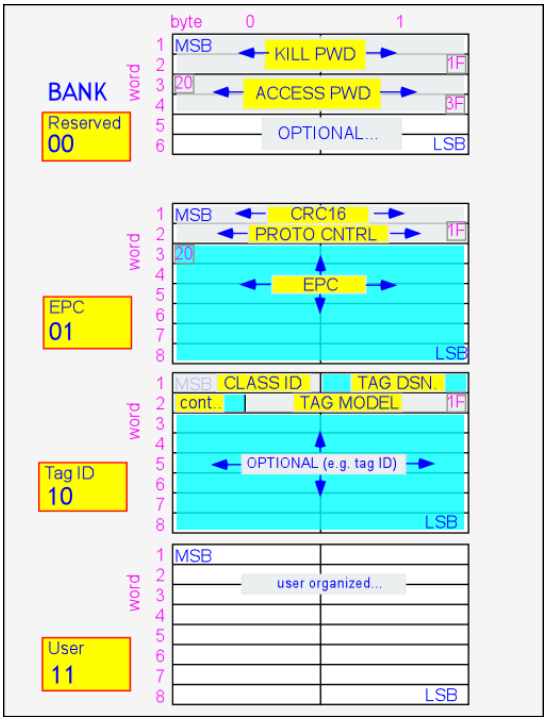

EPCGlobal has ratified an iMproved 'second-generation' class 1, usually known as the Gen II standard. The Gen II standard differs significantly from the earlier class 0 and class 1 standards. Some of the salient features are summarized here.

Gen II tags have a memory organized into banks. Each bank is further subdivided into two-byte words. Bank 00_2 is reserved for the access codes and kill passwords. Bank 01_2 contains the unique EPC, corresponding error check (CRC), and protocol control bits. Bank 10_2 contains optional information about the tag itself. Bank 11_2 is user memory and may be organized in any convenient fashion.

Collision resolution in Gen II uses a different approach from the binary-tree-based algorithms used in class 0 and class 1 tags. Gen II uses a variation of slotted Aloha, somewhat similar to the collision-resolution employed in Ethernet networks. If multiple tags are present in the field, the reader can issue a Query command with a parameter Q that describes the size of the arbitration space. Tags randomly select an arbitration value from 0 to 2^Q-1, and then decrement that value on each succeeding QueryRep command until the value reaches 0. Tags that have a zero-valued counter reply to the Query. If the reader sees few responses, it can change the value of Q to make the arbitration space smaller. If the reader sees many collisions, the value of Q can be increased to make more room to arbitrate large numbers of tags.

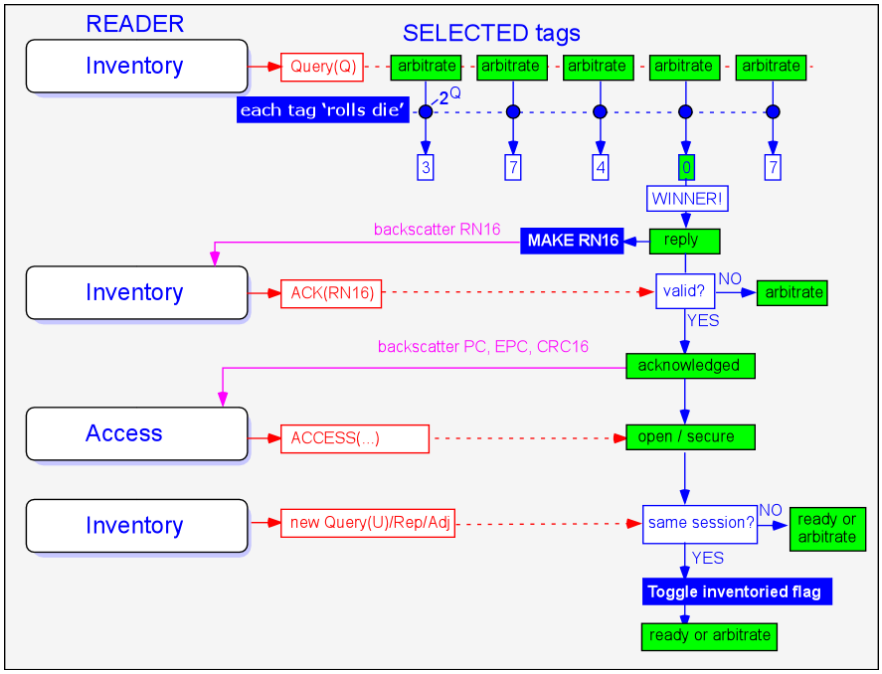

Up to 4 simultaneous inventory sessions can be supported by each tag, using separate status flags for each session. Because the singulation process makes use only of random numbers generated as needed to support reader communications, the reader never transmits the EPC of the tag, reducing the likelihood of interception of any sensitive information.

The reader and tag physical-layer symbols and modulation are different from those used in class 0 or class 1. The reader employs pulse-interval encoding. A binary '0' is a high-low pair, and the length of this symbol defines the important reference time Tari. The binary '1' consists of a high-period at least Tari long, followed by a low power pulse of the same duration PW as the 0. The binary '1', as shown in the diagram, is at least 1.5 Tari long but may be as long as 2 Tari.

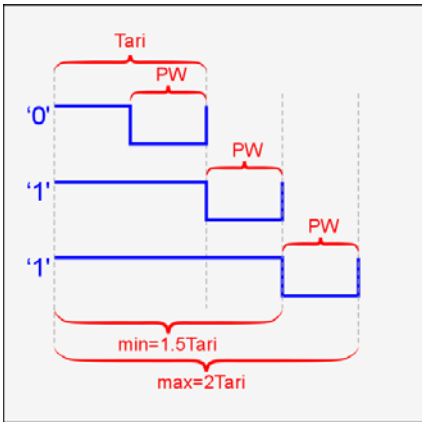

The reader packet preamble for Query commands includes a time reference signal, TRcal, that the tag uses in combination with a ***divide ratio*** DR to determine the data rate it should use for its reply.

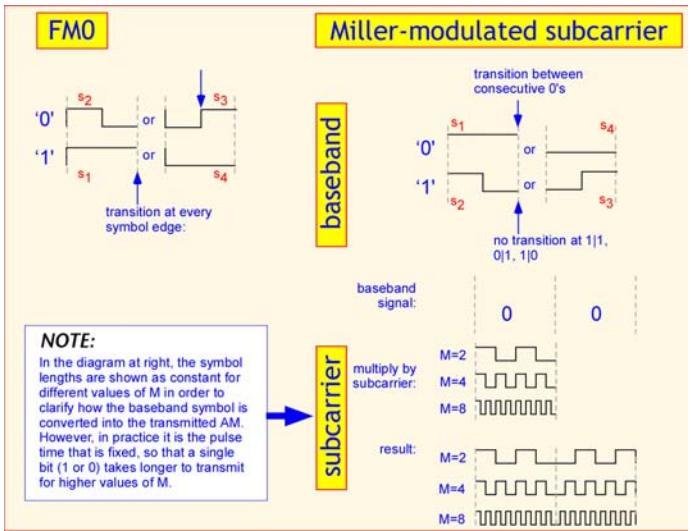

Depending on what the reader requests, the tag may reply using FM0 modulation (similar but not

identical to the F2F scheme used in the class 1 tags), or a ***Miller-modulated subcarrier*** (MMS) symbol set, basically consisting of FM0 symbols multiplied by a higher-frequency square wave. This system supports a wide range of data rates from around 20 Kbps to 640 Kbps, and corresponding variations in tolerance to noise and interference, at the cost of some extra intelligence required from the tag IC.

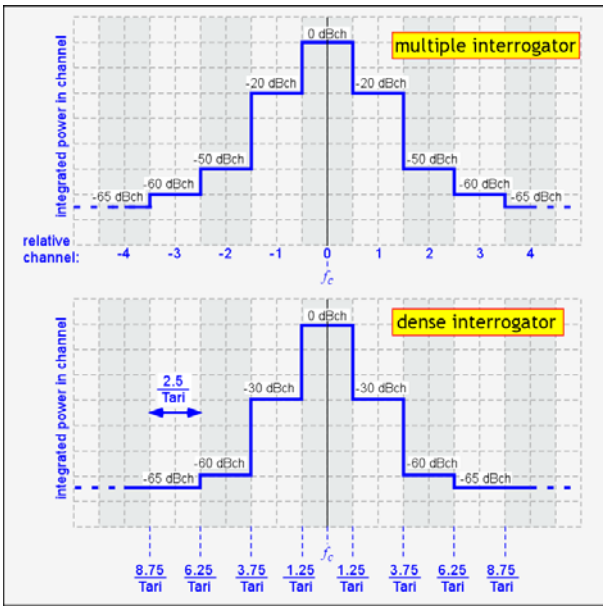

The Gen II standard also provides for three different types of readers. ***Single interrogators*** are readers that simply meet local regulations for RF emissions, and are substantially the same as currently-available technology. ***Multiple-interrogator*** readers are certified to meet a more demanding spectral emission mask, in which reader emission into adjacent frequency channels is reduced by at least 20 dB, and into next-adjacent channels by at least 50 dB. Finally, ***dense interrogator*** readers are required to suppress adjacent-channel emission by at least 30 dB, and next adjacent channel emission by 60 dB, as shown in the diagram.

An active Gen II tag can be in one of 7 states. The Ready state is entered when the tag powers up. A Query command from the reader causes the tags whose flags match the Query to enter the Arbitrate state, in which they create a slot counter value and decrement it on successive Queries until the counter value reaches 0. When the counter is 0, the tags enter the Reply state and attempt to send a random number to the reader. If the reader echoes that random number, the tag sends its unique EPC and enters the Acknowledged state. Once a tag has been Acknowledged, the reader can send individual commands to that tag in either an Open (non-secure) state, or using simple one-time-pad encryption in the Secured state. Finally, a tag can be Killed; after acknowledging its demise, the tag should remain in the Killed state permanently and no longer respond to any commands.

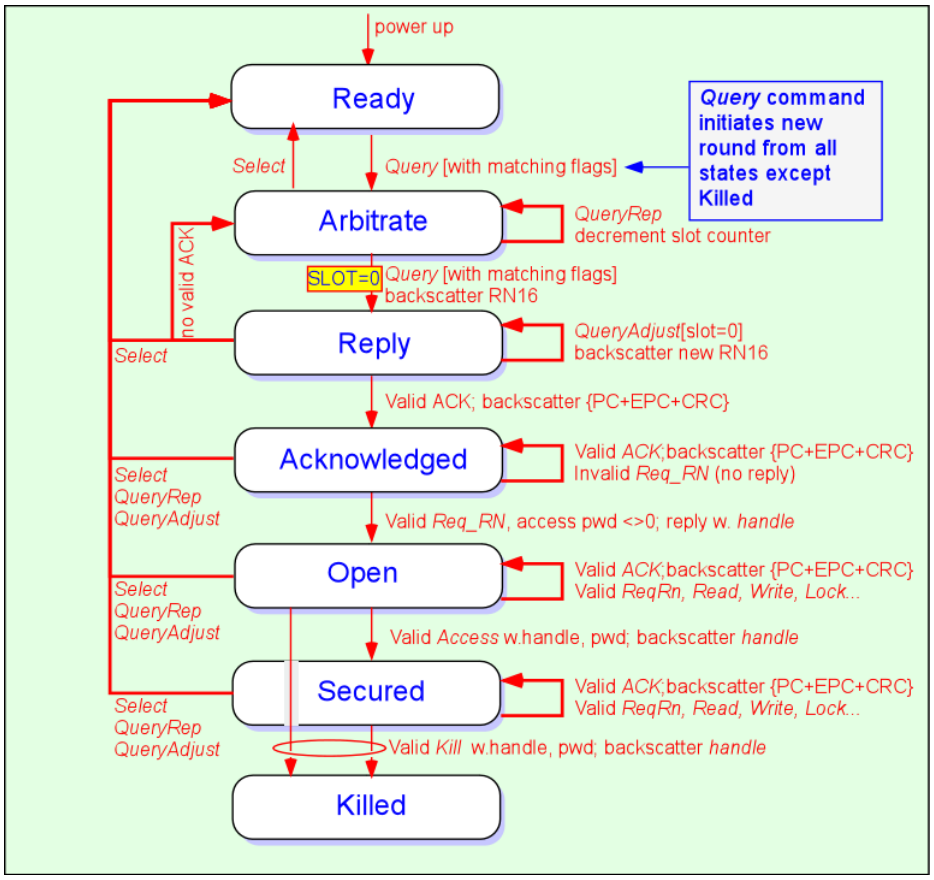

Reader commands are intentionally of differing bit lengths, in order to save link time and provide some simple error checking. Some commands also use a packet error check (CRC) to detect bit errors.

1.1.4.2 ISO

The international standards organization has defined a number of standards covering RFID hardware and operation. Currently, ISO is defining a series of tag and reader standards under ISO 18000, covering operation at LF, HF, UHF, and microwave bands. ISO 18000-3 describes 13.56 MHz tags and readers, generally assuming a thin, flexible form factor appropriate to smart cards or labels. ISO 18000-4 describes operation at 2.45 GHz, including both passive and active versions. ISO 18000-6 describes two variant forms (A and B) of UHF tags. Finally, ISO 18000-7 describes active tags operating at 433 MHz, providing long range and high data rates but at much higher expense than passive tags.

ISO 15963 specifies unique tag identification numbers, and 15961 and 15962 specify data protocols and encoding. ISO 18046 and 18047 specify test methods for tags and readers.

1.1.4.2.1 ISO 1800-6 Summary

ISO18000-6 describes two variants, type A and type B, using distinct forward-link modulations, collision-resolution approaches, and command sets, though both use FM0 modulation for the tag-to-reader link. The Stationary portal reader supports ISO 18000-

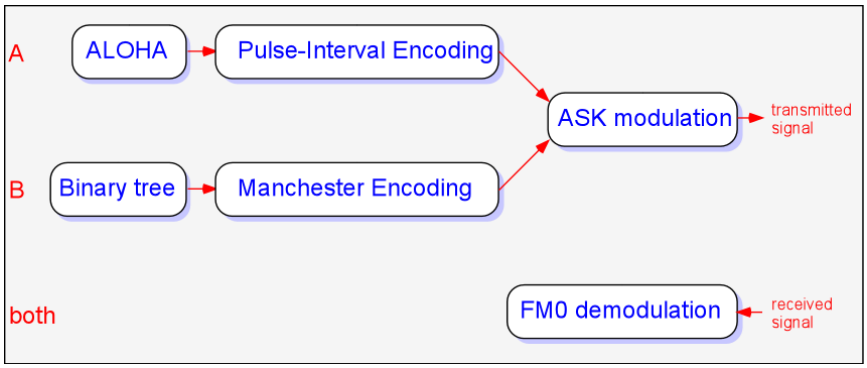

6B.

In the 18000-6B variant, Manchester-encoded symbols are used by the reader, with amplitude-modulation depth of either 100% or 11%. Binary '0' and binary '1' symbols have the same duration, but the opposite order: a '1' begins with RF power high, whereas a '0' begins with RF power low. There is no requirement for a power transition at every symbol edge, so the tag must be able to synchronize with the reader and sample at the appropriate times to avoid misinterpreting transmitted symbols.

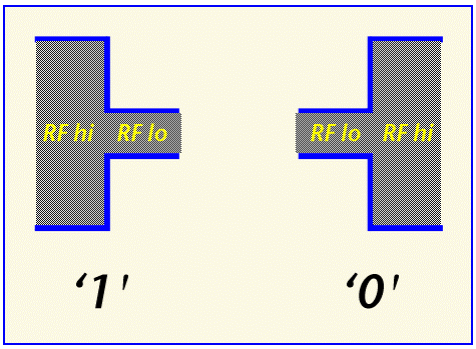

The tags use FM0 (same as the basic Gen II modulation, described in section 1.4.4.1.3 above) to communicate back to the readers.

The communications protocol is packet-based with a relatively complex reader packet.

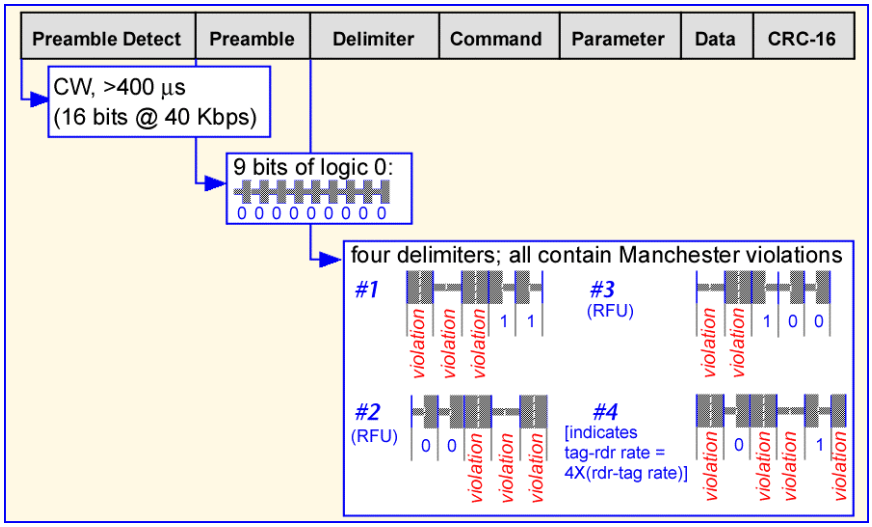

The tag replies with a simpler packet after a wait time that depends on the current data rate.

Quiet	Return Preamble	Data	CRC-16

The tags maintain 8 flags, though only 4 are currently used. Two of the flags track initialized status and write status; the other two are related to battery-powered tags. Tag memory is organized as up to 256 blocks of 1 byte each. The tag state diagram is relatively simple, with four basic states: power-off, ready, ID, and data_exchange. Collision resolution employs another slotted-Aloha variant. Instead of changing the size of the singulation space in response to collisions, the reader issues a failure notice, causing tags with non-zero counter values to increment their counters. When a successful singulation occurs, the reader issues a success notice causing tags to decrement their counters. Thus when collisions are frequent, tags will count up and respond infrequently; when collisions are rare, tags will count down and respond.

There are mandatory commands for selecting or unselecting groups, initializing a tag population, and sending SUCCESS or FAIL notices to the tags, and reading tags. Additional commands for WRITE and LOCK functions are recommended but not required.

.

1.2 Stationary portal RFID Reader Theory of Operation

The Stationary portal RFID reader consists of a transmitter and receiver, both employing the same local oscillator and direct up- and down-conversion from the carrier frequency, configured for operation within the US Industrial Scientific and Medical (ISM) band at 902-928 MHz. The transmitter signal both provides power to passive tags and delivers commands to the tags. The system is thus full-duplex in the sense that the transmitter continues to operate during reception of tag signals, but half-duplex in terms of data

transmission, since when tag data is being received the transmitted signal is unmodulated CW. In a typical exchange, the transmitter first powers up and sends a CW signal to provide power to tags in the read zone. Then a baseband on-off-keyed modulation, appropriately filtered, is imposed on the CW signal with a mixer. The reader data provides tags with synchronization information, requests tags to transmit their unique IDs and other data in memory, and may write new data to a tag or erase its memory, etc. After a command is given, the transmitter continues to transmit unmodulated CW power at the carrier frequency; this CW signal both provides power to operate the tag's integrated circuit, and provides the RF signal that the tags backscatter to send their signals back to the reader. The details vary depending on the protocol being used; see section 1.4.4 for a discussion of the differing protocols.

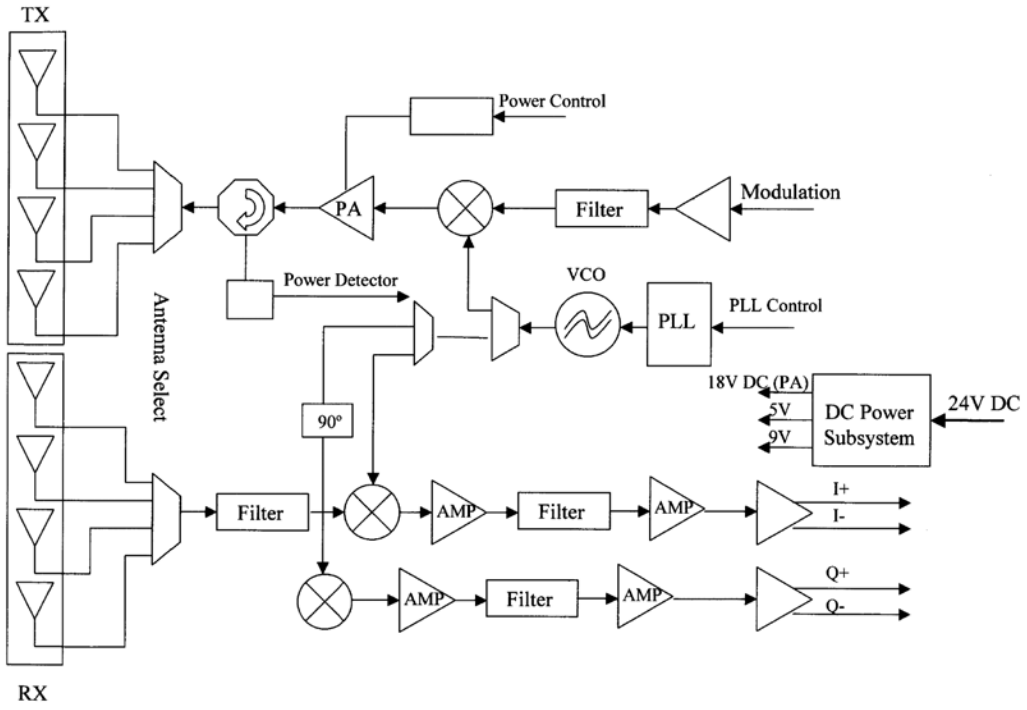

The backscattered signal is filtered and then mixed to baseband using the same VCO signal employed by the transmitter; the Stationary portal reader is a ***homodyne*** radio. In-phase / quadrature (I/Q) demodulation is employed in order to ensure that the baseband signal can be received despite variations in the absolute phase of the reflected carrier. (Without this provision, depending on the exact separation of the tag and reader antenna, the cable lengths, and other factors that cannot be controlled, the reflected signal would at times be in quadrature with the signal from the VCO, so that the mixer would produce no baseband output.) The outputs of the two mixers are filtered and amplified and then demodulated to extract the reflected signal from the tags. After each command set the power shuts down while processing of the commands proceeds. The nominal channel spacing is 500 KHz, providing 50 channels (with guard bands) within the ISM band. In accordance with FCC regulations, the carrier frequency periodically 'hops' in a pseudo-

random fashion over the ISM band to avoid persistent interference with other unlicensed users.

The overall system consists of the RF module, a controller, and interfaces to serial and Ethernet ports for communication with a host computer or network.

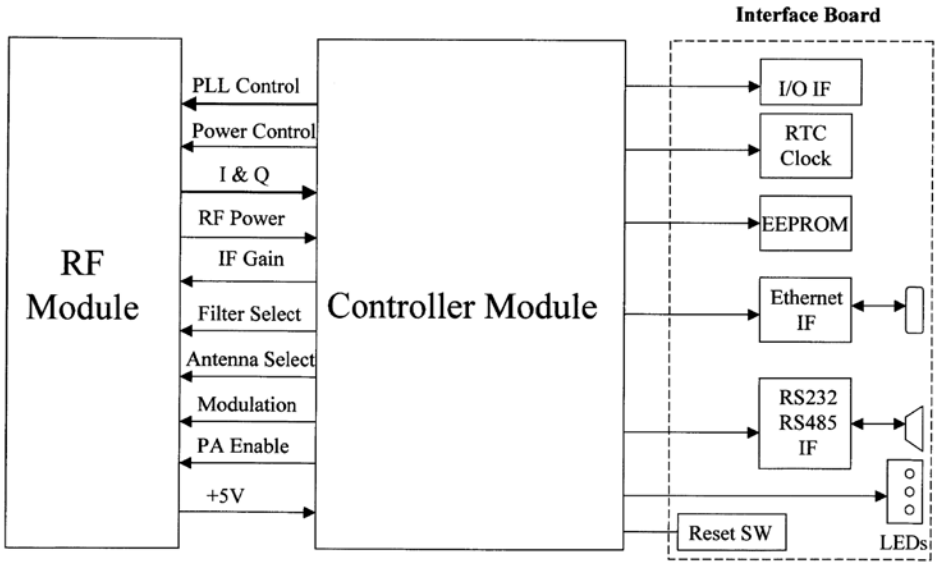

1.3 Host-Reader Interface

If you want to create your own software to communicate with and control stationary portal readers, see the document “SR2200 UHF Multi-Protocol RFID Reader RS-232 Serial Port Host Interface Protocol” for control using the serial port.