TABLE OF CONTENTS

1.0 Product Description

2.0 EkoCel, System Block Diagrams
- 2.1 EkoCel, Hub Block Diagram
- 2.2 EkoCel, Microcell Block Diagram
- 2.3 EkoCel™, HUB UNIT BLOCK DIAGRAM (W/Diversity Receive)
- 2.4 EkoCel™, MICROCELL UNIT BLOCK DIAGRAM (Single Band)
- 2.5 EkoCel™, MICROCELL UNIT BLOCK DIAGRAM (Dual Band HOST)
- 2.6 EkoCel™, MICROCELL UNIT BLOCK DIAGRAM (Dual Band Slave)
- 2.7 EkoCel™, High Power REMOTE BLOCK DIAGRAM (W/Diversity Receive

3.0 Description of EkoCel Fiber Optic Microcell System
- 3.1 Hub
- 3.2 Microcell

4.0 Description of the Hub Unit Modules
- 4.1 Fiber Optic Transceiver
- 4.2 Modem
- 4.3 RF Detector
- 4.4 4-Way Splitter/Combiner
- 4.5 DC/DC Converter
- 4.6 Hub Interconnect Module
- 4.7 Controller Module
- 4.8 AC Power Supply
- 4.9 Telco Modem
- 4.10 Duplex, Base Station Interface
- 4.11 Combiner Option
- 4.12 Cross Band Operation Option
- 4.13 Wave Division Multiplexer (WDM)
- 4.14 Optical Expansion Module

5.0 Description of the Microcell Unit Modules
- 5.1 Fiber Optic Transceiver
- 5.1b Fiber Optic Slave, with Dual Transmitters and a Single Receiver
- 5.2 RF Modem
- 5.3 LNA/Driver Module
- 5.4 Duplexer
- 5.5 Lightning Arrestor
- 5.6 Power Amplifier Module MCA
- 5.7 Microcell (Remote) Control Interface Module
- 5.8 Power Supply for High Power Remotes

6.0 Identification of Hub

- 6.1 Front Panel Layout
- 6.2 Rear Panel Layout
- 6.3 Hub Components Layout
- 6.4 Optical Transceiver
- 6.5 Wave Division Multiplexer
- 6.6 System Interconnect
  - 700-1005 Interconnect Module Board
    - Input Connectors
    - Controls
    - Terminal Strip
    - Attenuators
      - Output to Up Link Combiner RF Inputs
      - Input to Optical Transceiver RF Out
    - Other
  - 700-1001 Board

7.0 Identification of Microcell

- 7.1 Left Panel, A Single Band
- 7.2 Left Panel, Dual Band
- 7.3 Door Panel Microcell
- 7.4 Back (Heat Sink) Microcell (EKO-8) (EKO 1.9R)
- 7.4b Back (Heat Sink) Microcell (EKO-1.9M)
- 7.5 Base Bottom
- 7.6 Triplexer
- 7.7 System Interconnect

8.0 Software Control Module

- 8.1 Microcell (Remote) Unit Controller
  - 8.1.1 Basic Interface
  - 8.1.2 System Setup
  - 8.1.3 User Settings
  - 8.1.4 Alarms
- 8.2 Hub Unit Controller
  - 8.2.1 Basic Interface
  - 8.2.2 System Setup
  - 8.2.3 User Settings
  - 8.2.4 Alarms
- 8.3 RS 232 Port Communications
  - 8.3.1 Terminal Interface Displays

9.0 Installation

- 9.1 Introduction
- 9.2 Getting Started
- 9.3 Mounting Hub Hardware
- 9.4 Mounting the Microcell Unit

9.5 EkoCel™ 1.9 System Set Up Instructions
9.5.1 Down Link Set Up for EKO-8 System
9.5.2 Up Link System Set Up for the System

9.6 Calibration Table – U2
9.6.1 Calibration Table – U3
9.6.2 Calibration Table - U5

10.0 Trouble Shooting and Maintenance
10.1 Trouble Shooting Guide
10.2 Understanding Maintenance Inputs/Alarms
10.3 Module Replacement Procedures
10.4 Block Diagrams with Levels

Appendix

A. Specifications
4 Watt 800MHz (SMR/ESMR), (Cellular)
50 Watt 800MHz (SMR/ESMR)
50 Watt 800MHz (Cellular)
B. Model Number Identification (800M)
E. Frequency Bands
Channel Plans
E1. CDMA 1.9 GHz
E2. CDMA 900 MHz
E3. GSM 1.9 GHz
E4. IS-136 1.9 GHz

F. Product Warranty

EkoCel™ FIBER OPTIC MICROCELL SYSTEM

1.0 PRODUCT DESCRIPTION

The EkoCel™ Fiber Optic Microcell System will support CDMA, PCS 1900, IS-136 or AMPS system formats. EkoCel™ provides system coverage enhancement by remoting the base station RF receive and transmit via a fiber optic connection to a location requiring coverage. EkoCel is designed to meet or exceed applicable base station and FCC emission standards. The EkoCel enhanced specifications provide minimal impact to the overall system performance. EkoCel is comprised of two major components the Microcell (Remote) Unit, which is remotely located in the area being provided service and the Hub Unit, which is located at the base station. EkoCel will support multiple RF channels on all PCS system formats and up to 24 channels for AMPS Cellular. Several options are available including, Wave Division Multiplexing (WDM), diversity receive, battery back up and duplex interface at the base station. EkoCel is supplied in all of the PCS bands A to F and is also available in a dual band operation configuration. The dual band unit will support both 1.9 GHz PCS and 800 MHz Cellular system over the same fiber optic cable.

EkoCel is designed to meet the service provider requirements for Operations, Administration, Maintenance and Performance (OAM&P). Alarm and control of the system is accessible at the Microcell hub, remote unit or via a telephone (wire or wireless) modem connection. Relay contacts also allow the user to remote the alarms with the base station alarm system with user defined contacts. This allows the service provider to have instant alarm notification at the Network Operation Control Center (NOCC) without additional specialized hardware and software, commonly referred to as an Element Management System. This provides simplicity and cost savings to the user. Both the hub and the microcell remote are equipped with a display and function keypad allowing the user easy access to alarms and system controls without additional equipment. Three levels of security are provided to prevent unauthorized access to the system.

EkoCel has a patent pending self-set up and system control feature that will allow the system to automatically set up for the user defined system requirements. EkoCel automatically adjusts gain and power based on the number of RF channels, system format, system input power and optical loss. The system continues to monitor system performance and alert the user of any system changes that requires additional real time compensation.

EkoCel was developed specifically for use as a fiber optic microcell. It specifically addresses the problem of system set up which has always been an issue with fiber optic systems. The patented closed loop control system provides for long term changes in the fiber optic system that occurs without continued maintenance monitoring. Since the microcell is a remote antenna interface the design is specifically tailored for this application. The up link amplifier has a low noise figure and a high 3rd order intercept point. The downlink signals are coupled from the base station and do not require

channelization to prevent the amplification and re-radiation of unwanted signals. Alarm reporting is accomplished at the hub not at the remote unit, which would require a subscriber phone or telephone modem to be mounted in a harsh environment that they are not typically designed for.

2.0 EkoCel™ FIBER OPTIC MICROCELL SYSTEM BLOCK DIAGRAM

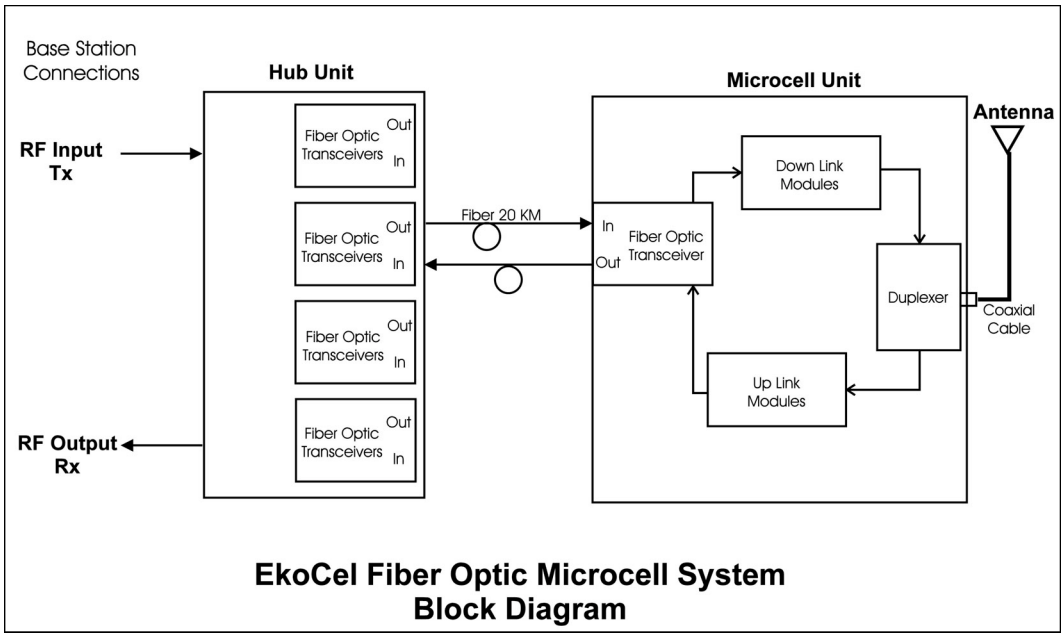

EkoCel Fiber Optic Microcell System Block Diagram

CI Wireless Inc.
1211 Ira E. Woods Ave., Grapevine, TX 76051

2.1 EkoCel™, HUB UNIT BLOCK DIAGRAM (Single Band)

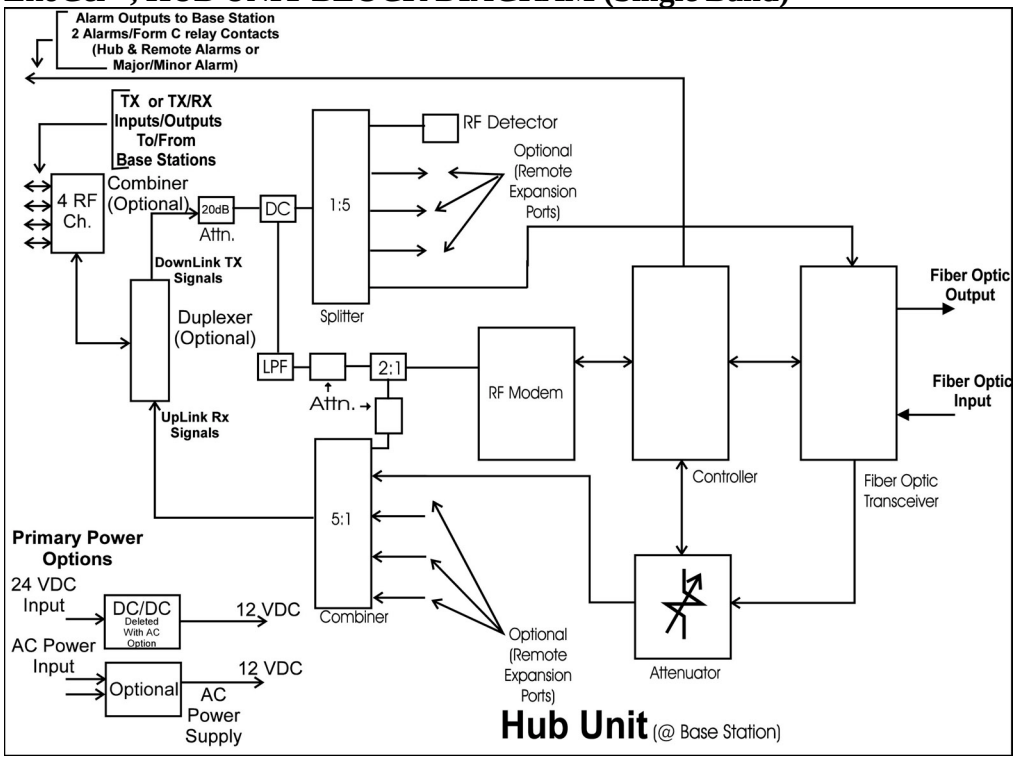

2.2 EkoCel™, HUB UNIT BLOCK DIAGRAM (Dual Band)

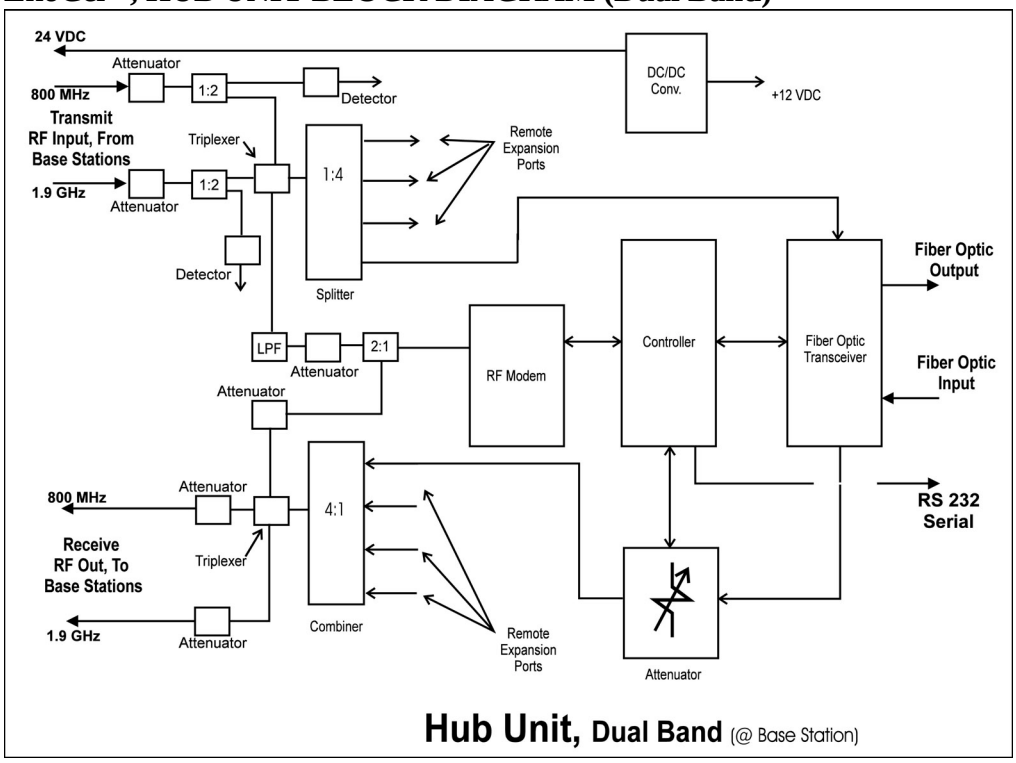

2.3 EkoCel™, HUB UNIT BLOCK DIAGRAM (W/Diversity Receive)

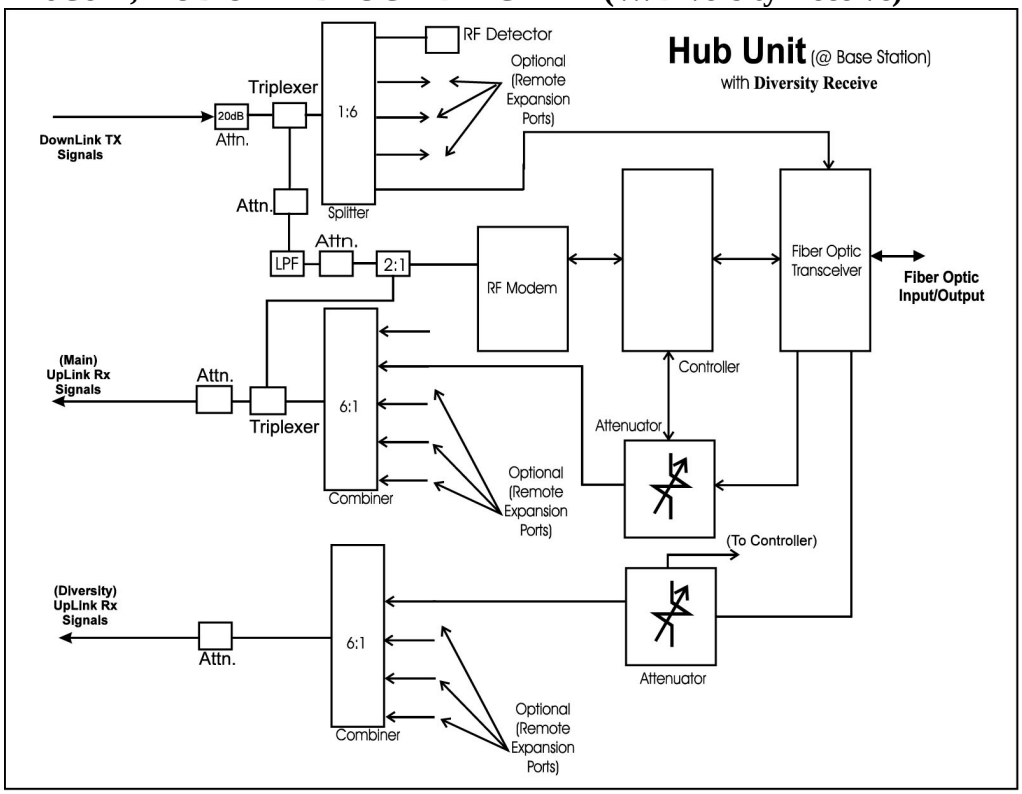

2.4 EkoCel™, MICROCELL UNIT BLOCK DIAGRAM (Single Band)

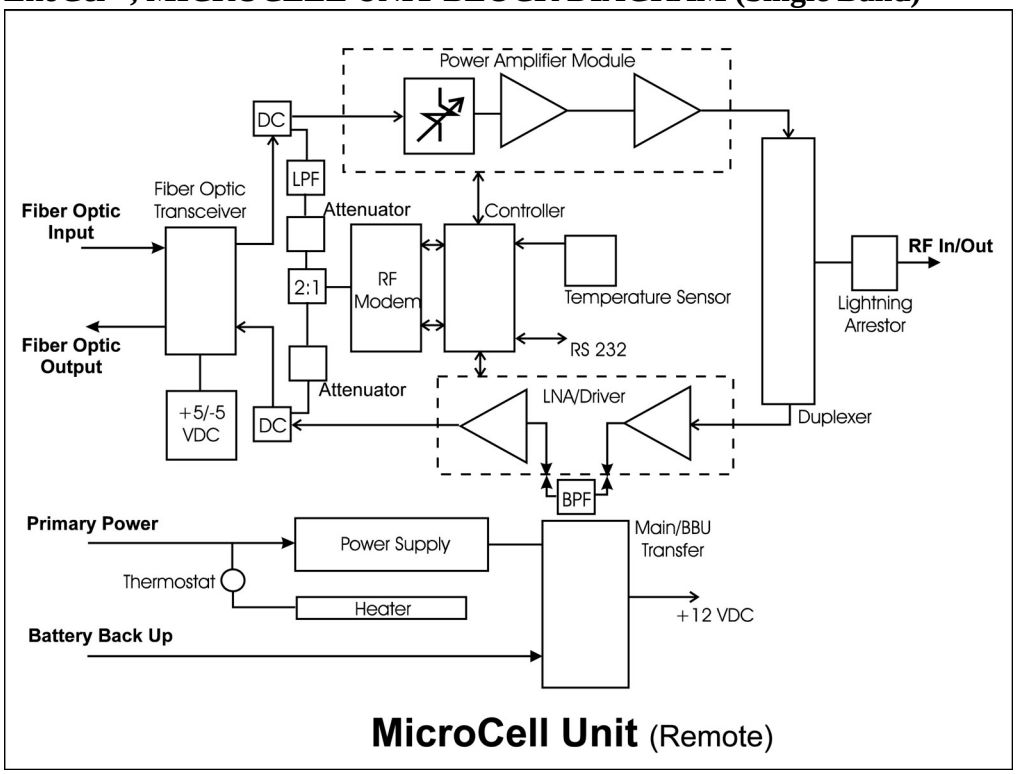

CI Wireless Inc.
1211 Ira E. Woods Ave., Grapevine, TX 76051

2.5 EkoCel™, MICROCELL UNIT BLOCK DIAGRAM (Dual Band HOST)

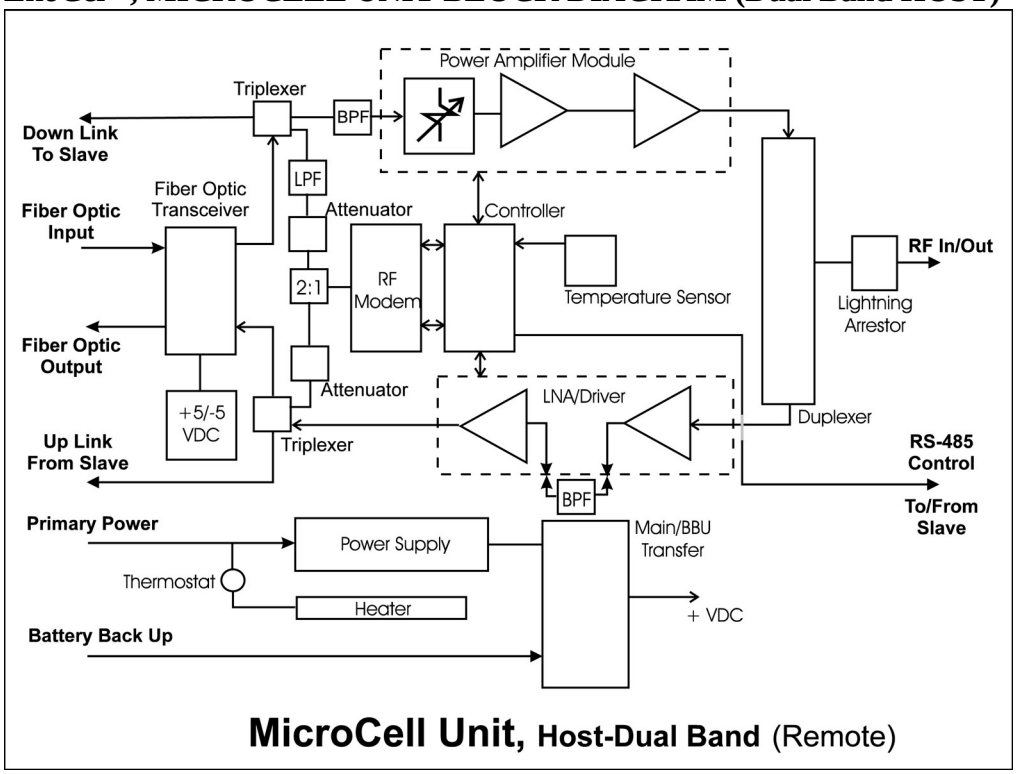

2.6 EkoCel™, MICROCELL UNIT BLOCK DIAGRAM (Dual Band Slave)

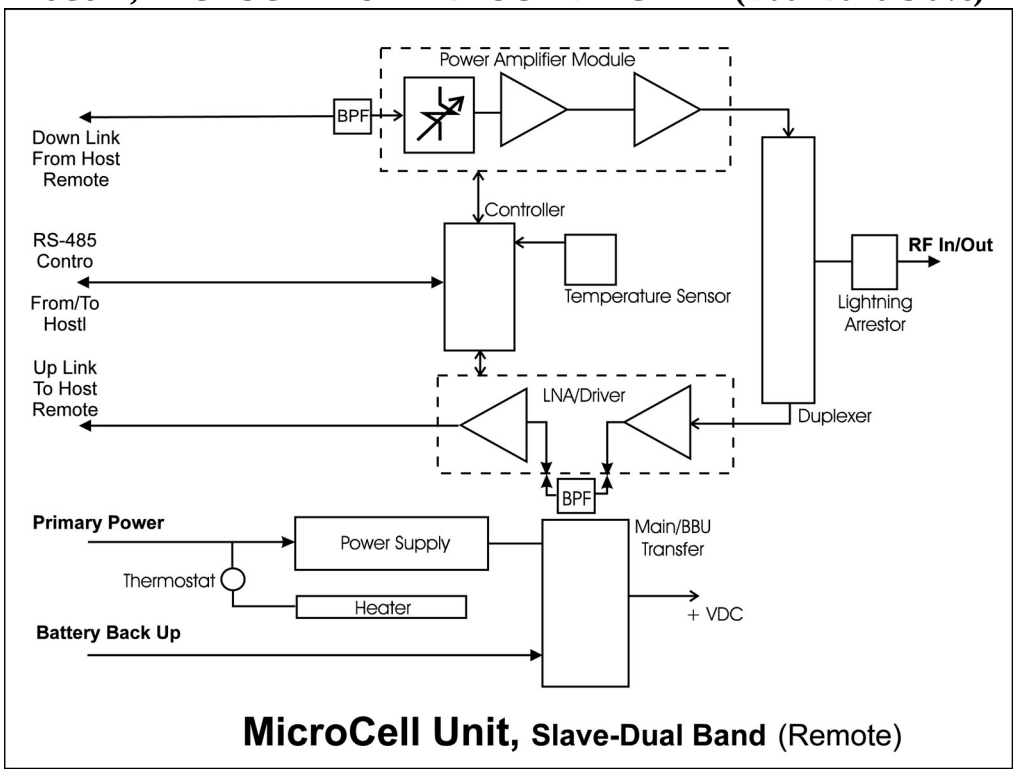

2.7 EkoCel™, High Power REMOTE BLOCK DIAGRAM (W/Diversity Receive)

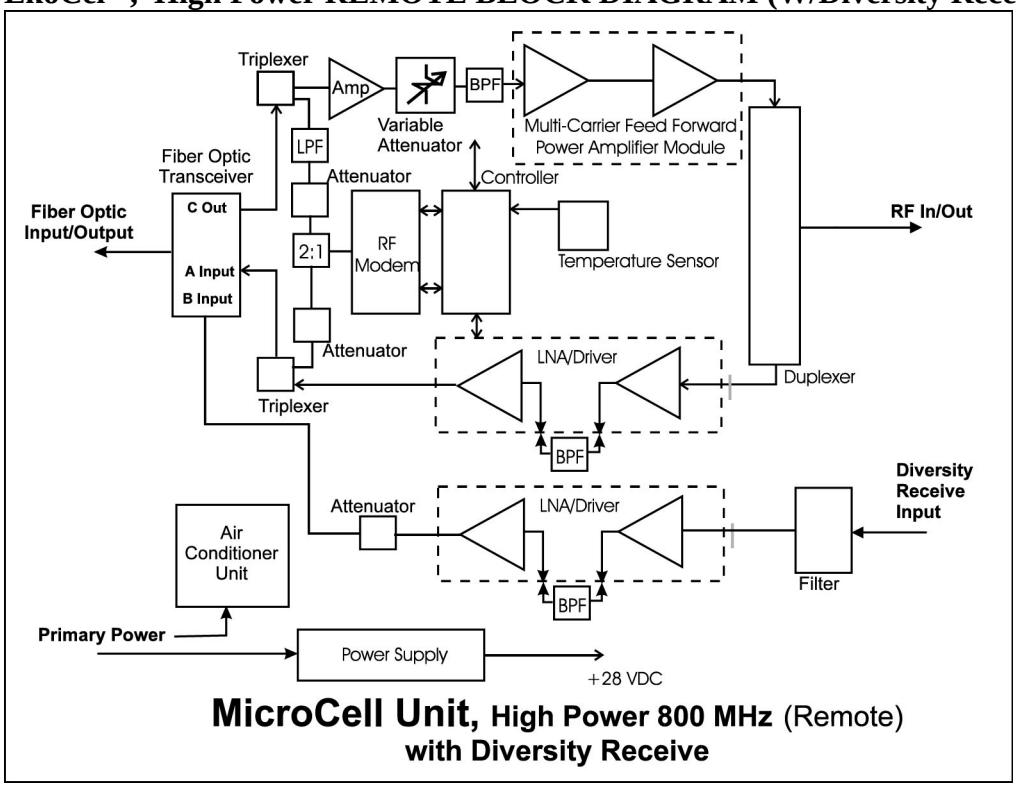

3.0 DESCRIPTION OF EkoCel™ FIBER OPTIC MICROCELL SYSTEM

3.1 Hub Unit

The Hub unit provides the hardware interface to the base station and the fiber optic systems that will transport the RF signals to the Microcell Units.

The Hub unit with Expandable option will support up to 4 Microcell Units by installing additional Fiber Optic Transceivers. Each of these Microcell Units will be individually alarmed and controlled. The optical path to each of the Microcell Units may be up to 20 kilometers in length.
Reference: 2.1 , 2.2 and 2.3

3.2 RF Microcell (Remote) Unit

The Microcell Unit provides all of the electronic hardware to interface to the fiber optic interconnect and the required amplifiers to process the up link and down link RF signals. The up link and down link signals are duplexed to a single radiating antenna via a coaxial cable. Access to alarms and controls for the hub and other Microcell Units are available via the control module.
Reference: 2.4 , 2.5 , 2.6 and 2.7

CI Wireless Inc.
1211 Ira E. Woods Ave., Grapevine, TX 76051

4.0 DESCRIPTION OF THE HUB UNIT MODULES

4.1 Fiber Optic Transceiver

The Fiber Optic Transceiver provides the RF signal transmission and reception via the fiber optic cable between the hub and microcell units. Alarm monitor outputs are provided to the control module to provide real time monitoring of the operational performance. The down link transmitted optical signal is 1550 nm wavelength and the up link received optical signal is 1310 nm wavelength. The different optical wavelengths allow the addition of wave division multiplexing (WDM) to any unit. This also reduces the requirement for maintenance spares in mixed system.

4.1b Fiber Optic Master with Dual Receive and a Single Transmitter

This optical transceiver accomadates the additional up link receive path required for Diversity Receive option. The unit has a single down link 1550 mm laser (Channel C, RF In) and two receive photo diodes (Channel A Main Receiver and Channel B Diversity Receiver) combined together with an internal Wave Division Multiplexer (WDM) allowing single fiber operation. RF Modem uplink path is on Channel A.

4.2 RF Modem

The RF Modem module provides several functions in the RF signal path. The modem provides the data receive and data transmit path between the hub and the microcell units with communication links being RS485. The data is transmitted on a RF carrier on the down link path in the 460 to 512 MHz band and received on the up link path on the same selected RF channel. These signals are coupled with the carrier signals with a directional coupler or triplexer. The RF modem receiver reports the RSSI level to the controller to calculate the RF and up link optical path loss. The controller also uses this reading to adjust the up link attennuator to the proper setting for desired carrier signal level.

4.3 RF Detector

The down link RF carrier level is monitored by the controller as part of the closed loop gain control and auto set up system. This level is reported as Base Station input RF power level and laser input level. The operator can view the RF detected level as desired for maintenance, installation and system set up.

4.4 Splitter/Combiner

The Splitter/Combiner allows the input and output RF signals to the base station to be split to 4 paths to serve the optional system capability to support up to four remote microcell units. The hub will support the expansion of four fiber optic transceivers. A splitter output on the down link is used to couple signal to the RF detector and one up link combiner output is used to couple signal to the RF modem.

4.5 DC/DC Converter

The DC to DC converter provides the required conversion of DC levels required internal from the 18-36 VDC supply voltage provided by the user from the base

station power source. Since the base station is automatically backed up by battery power no additional back up power source is required by the hub unit.

4.6 Hub Interconnect Module

The Hub interconnect module provides the interface between the controller module, the RF modem, fiber optic modules and the up link RF path signal attenuators to the control circuits. It also provides user alarm interface and DC distribution to all modules.

4.7 Controller Module

The Controller module provides the monitoring and control of the alarm and control functions of the hub and microcell units. These alarms and controls can be addressed and displayed by the function keys and display on the front of the control unit. The controller also supports either a hyper terminal connection or a optional modem. Alarms are instantly reported either via an optional modem connection or by the base station alarm function using the relay alarm contacts on the Hub interconnect module. Normally the two alarm relays are set up to alarm Hub on relay 1 and Microcells on relay 2. The technician can access the control and alarm system via the hyper terminal or optional telephone modem and determine the actual alarm and system status.

4.8 Controller Expansion Module

The Controller Expansion Module allows for additional uplink path attenuators for the added diversity receive paths. Since the optical loss is the same for both of the receive paths the diversity attenuators are controlled in parallel with the main receiver attenuators. This boardis stacked above the Controller Module and connected with a ribbon cable.

OPTIONAL MODULES;

4.9 AC Power Supply

The optional AC power supply allows the hub unit to operate from the AC primary power source. This option deletes the DC/DC converters.

4.10 Telco Modem

The telco modem provides the optional ability to remotely connect to the hub control module and access system alarms and controls. This option uses the Local Hyperterminal output and it is not available for use when this option is selected.

4.11 Duplex, Base Station Interface

The duplex base station interface option provides the required duplexer and cabling changes required for a single TX/RX input connection from the base station.

4.12 Combiner Option

The combiner option provides multicarrier interface (see Figure 2.1).

4.13 Cross Band Operation Option

The cross band operation option provides the triplexing, cabling and hardware changes for the combining of PCS 1.9 MHz signals with the Cellular 800 MHz signals and the RF modem signal to a common input/output to/from the fiber optic module. (Reference Figures 2.2 and 2.4).

4.14 Optical Expansion Module

The fiber optical expansion module is required at the Hub for each Microcell unit added to the EkoCel™ Fiber Optic Microcell System and may be expanded up to a total of four per hub.

5.0 DESCRIPTION OF THE MICROCELL UNIT MODULES

5.1 Fiber Optic Transceiver

The Fiber Optic Transceiver provides the RF signal transmission and reception via the fiber optic cable between the hub and microcell units. Alarm monitor outputs are provided to the control module to provide real time monitoring of the operational performance. The down link received optical signal is 1550 nm wavelength and the up link transmitted optical signal is 1310 nm wavelength.

5.1b Fiber Optic Slave, with Dual Transmitters and a Single Receiver

This optical tranceiver module accomidates the additional up link transmit path required for diversity receive option. The unit has a single down link photo diode receiver (Channel C RF Out) and two 1300 mm lasers (Channel A main receiver and Channel B diversity receive) combined together with an internal WDM allowing single fiber operation. RF Modem uplink is on Channel A.

5.2 RF Modem

The RF Modem module provides several functions in the RF signal path. The modem provides the data receive and data transmit path, via RS485, between the hub and the microcell units. The data is received on a RF carrier on the down link path on a channel between 460 to 512 MHz and transmitted on the up link path on the same channel carrier. The down link modem carrier is decoupled from the PCS carrier signals with a directional coupler or triplexer and a low pass filter. The PCS up link carrier signals from the LNA/Driver module are coupled to the fiber optic module input combined with the RF modem carrier with a directional coupler or triplexer

.

5.3 LNA/Driver Module

The LNA/Driver module is divided into two sections. The LNA section which has moderate gain and a very high third order intercept point of 32 dBm and a low noise figure of <1.5 dB. The LNA is coupled outside of the module through a SMA/F connector to a band selective band pass filter. Future options, which may require higher selective filtering, utilizing active filtering can also be accommodated. Optional filtering could allow channel selective or tighter band selective filtering. The high performance LNA achieves a superior system dynamic range. This prevents overdrive from undesired out of band signals which are could be received at higher than desired signal levels.

The driver input is coupled into the module through a SMA/F connector. The driver has limit peaking of high level injected signals which will prevent overdriving and damaging the laser. Overall gain of the LNA and driver is 49 dB. This provides for maximum sensitivity of the system at the maximum allowable optical loss of 10 dB. (10 dB of optical loss is equal to 20 dB RF loss. This insures an overall system noise figure of <6 dB.

Versions of LNA/Driver Modules:

1.850 - 1.910	GHz
806 - 849	MHz

CI Wireless Inc.
1211 Ira E. Woods Ave., Grapevine, TX 76051

5.4 Duplexer

The duplexer couples the down link transmitted signals and the up link received signals to a common antenna output which allow band selective or full band system operation.

5.5 Lightning Arrestor (optional)

The lightning arrestor is to provide maximum protection from the environment. Throughput energy ≤0.5 μJ (8/20μs at 3kA). DC blocked for maximum equipment protection. N/female connection to the RF input/output.

5.6 Multi-Carrier Feed Forward Amplifier (800 MHz High Power Remotes)

MCA amplifiers are supplied in the ESMR/IDEN 800 MHz and Cellular High Power Remotes. Both are feed forward amplifiers units allowing composite powers of up to 50 watts. Mannual located in Components Section.

5.7 Remote Control Interface Module (High Power)

The Microcell (Remote) Control interface module provides circuits to set units' address and calibration controls for RF power and down link RF and optical loss. In addition, it provides the down link power control attenuator for adjusting the output to the desired power level. The controller also monitors the enclosure ambient temperature and provides electronic compensation for low temperature operation if required. The DC to DC converter provides +5 VDC and –5 VDC for operation of the laser modules, and a 28 to 12 VDC converter. DC distribution to the controller, optical receiver, optical transmitter, and RF modem is provided via this interface module.

5.8 Power Supply for High Power Remotes (27 VDC)

Kepco Model HSM 28-36, manual in Components Section.

6.1 Front Panel

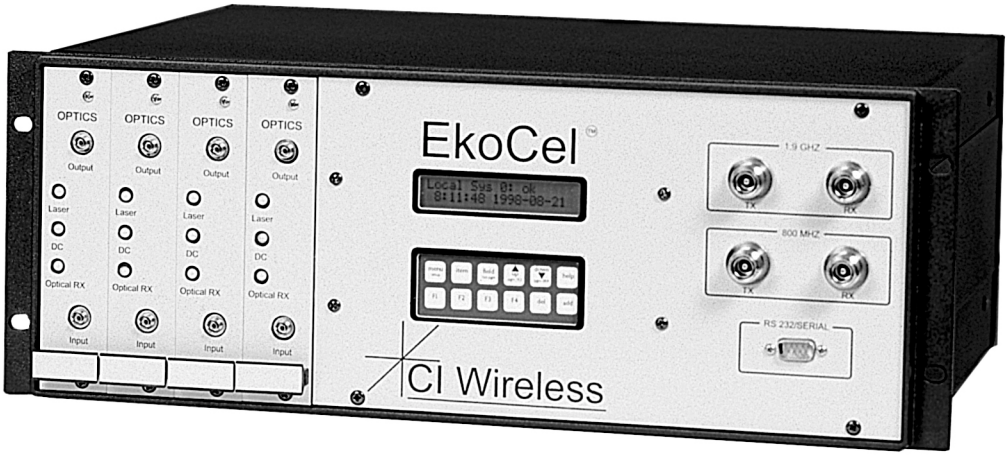

6.2 Back Panel Hub

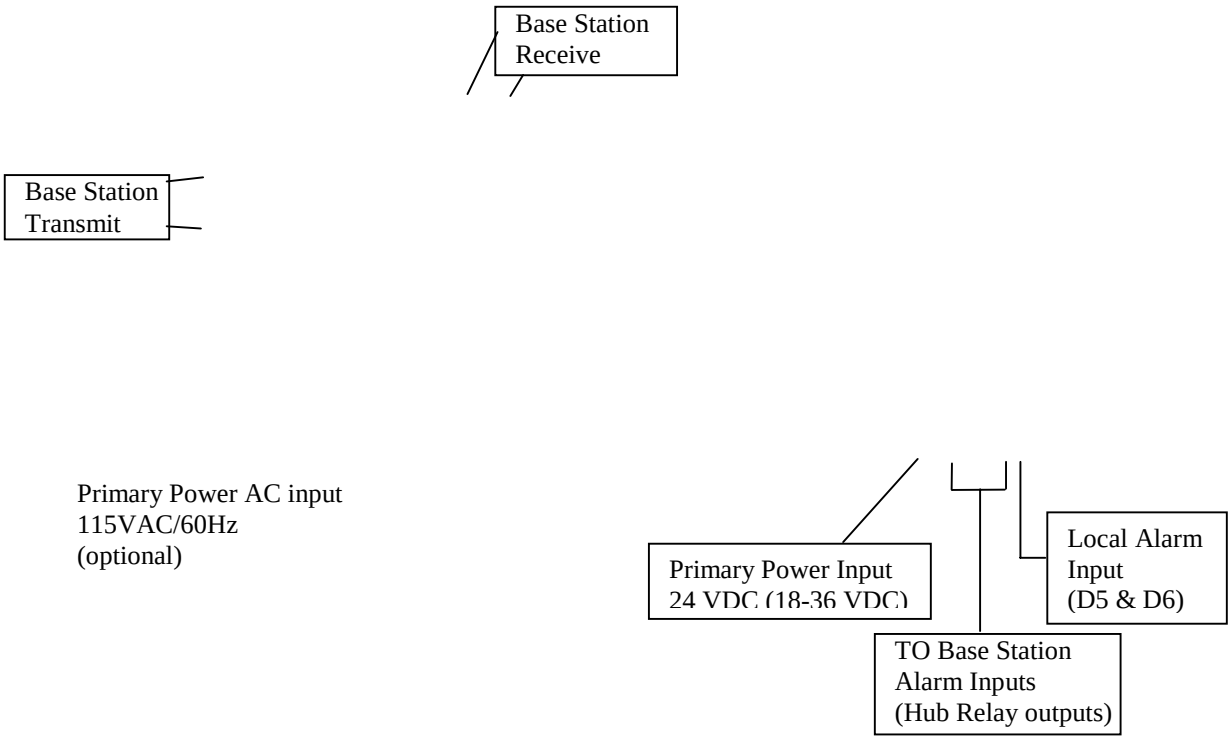

CI Wireless Inc.
1211 Ira E. Woods Ave., Grapevine, TX 76051

6.3 Hub Component Layout(Front Down)

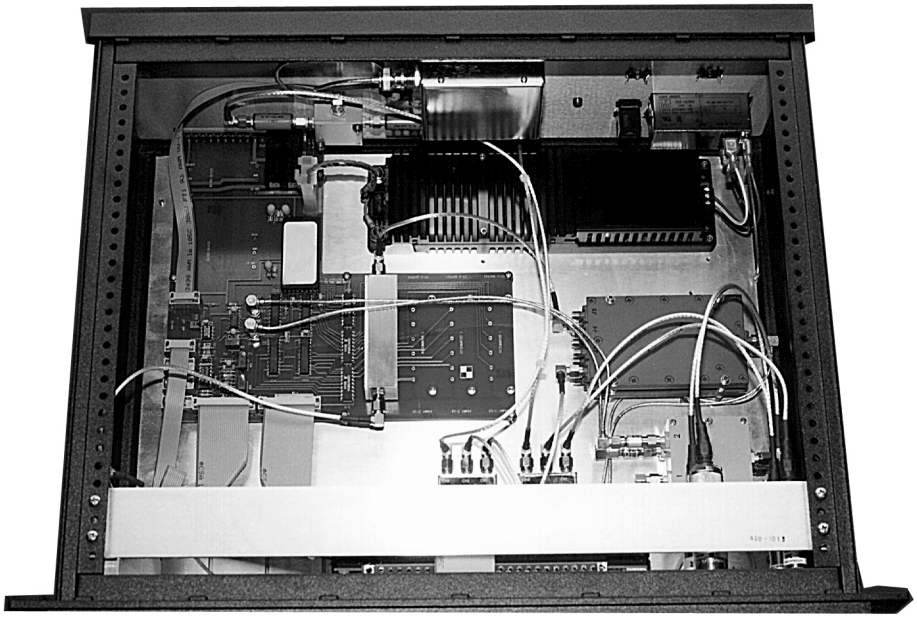

6.3 Hub Component Layout(Back Down)

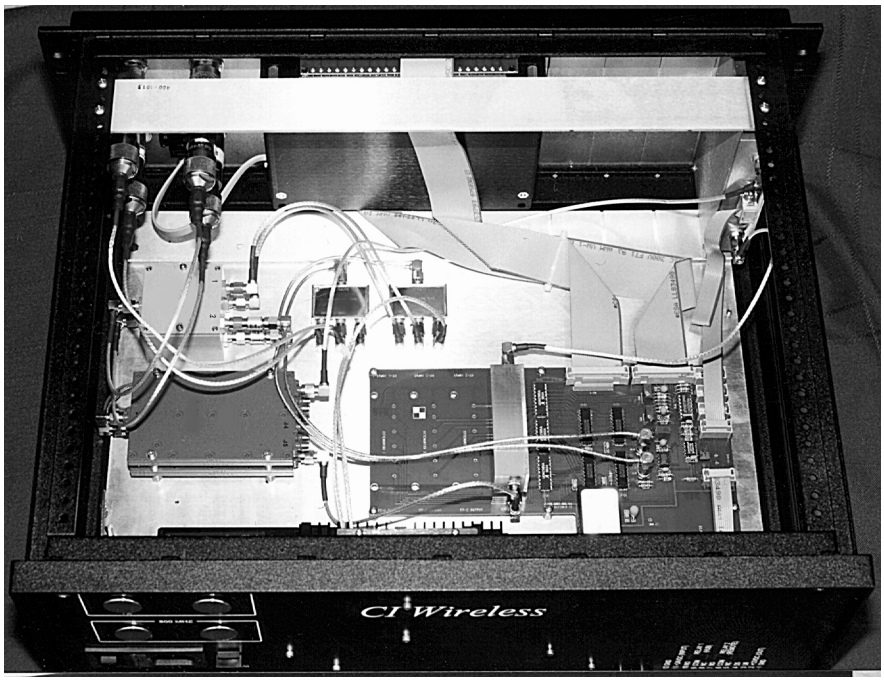

6.4 Optical Tranceiver

Fiber Optic Tranceiver Interconnect:

RF Input	-	Transmit Splitter output, RF cable
RF Output	-	AT 1 through AT 4 of appropriate attenuator on 700-1005, RF cable
D-sub	-	J3 through J6, 10 conductor ribbon cable

6.5 Wave Division Multiplexer (Optional)

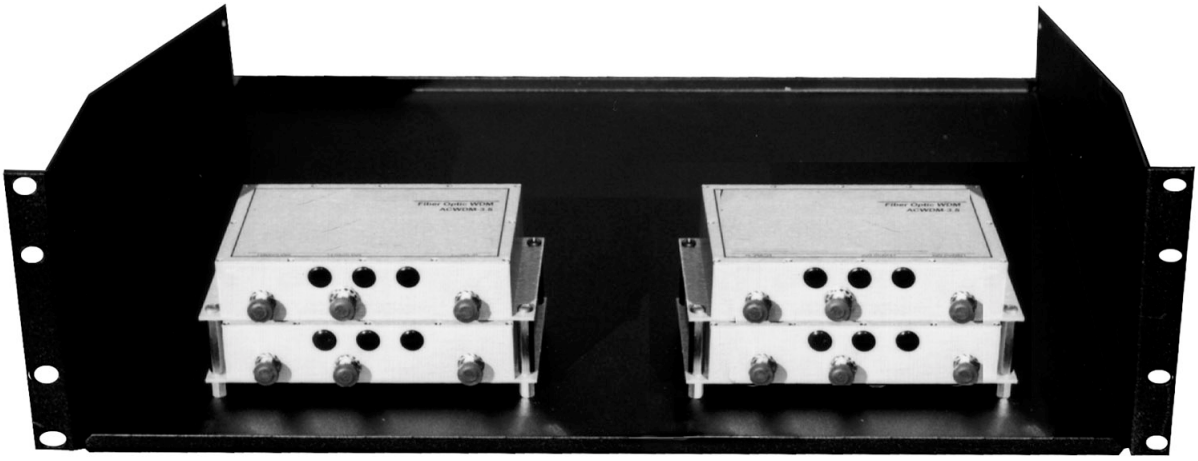

CI Wireless Inc.
1211 Ira E. Woods Ave., Grapevine, TX 76051

6.6 Hub Interconnect Module

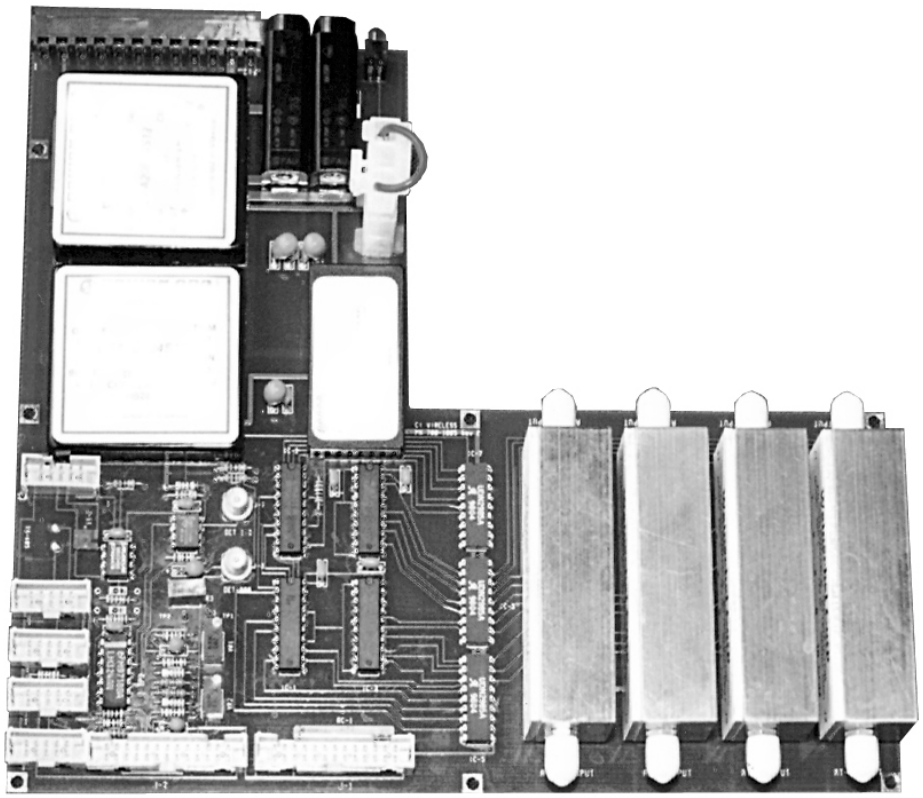

700-1005 Board Located on the Base Plate (Hub Interconnect Module)

Input Connectors

J1 - Ribbon Cable Connecting to the Controller Top Board Ass'y, (nearest LCD display & Power Lead)
J2 - Ribbon Cable Connecting to the Controller Bottom Board Assembly (nearest keypad)
J3 - Fiber Optical Transceiver 1, RF OUT
J4 - Fiber Optical Transceiver 2, RF OUT
J5 - Fiber Optical Transceiver 3, RF OUT
J6 - Fiber Optical Transceiver 4, RF OUT
J7 - 1.9 GHz TX Power In Detector
J8 - 800 MHz TX Power In Detector
J9 - Power Input 12 VDC from AC Power Supply *Jumper Pin 1 to 3 for 24 VDC Operation
J10 - RF Modem
J11 - RS 485

Controls

VR 1 - Calibration 1.9 Detect TX Power In
VR 2 - Calibration 800 MHz TX Power In
VR 3 - Calibration RF Up Link Gain

Terminal Strip

TS - 485	UNUSED	
12 VDC/Out		
U6		
D5		
Relay 1 NC		Hub Alarm*
Relay 1 COM		Hub Alarm*
Relay 1 NO		Hub Alarm*
Relay 2 NC		Microcell (Remote) Alarm*
Relay 2 COM		Microcell (Remote) Alarm*
Relay 2 NO		Microcell (Remote) Alarm*
24 VDC/IN		
Ground		

*Normally energized, de-energized in alarm state. Indicated states are alarmed condition.

Attenuators

Outputs Connects to Up Link Combiner RF Inputs

AT 1 Out	Remote Address 1	+/or 5
AT 2 Out	2	+/or 6
AT 3 Out	3	+/or 7
AT 4 Out	4	+/or 8

CAUTION* These inputs must be connected to the proper laser modules serving microcells (remotes) of the indicated address.

Inputs Connects to Optical Transceiver RF Out

AT 1 IN from Fiber Transceiver 1
AT 2 IN from Fiber Transceiver 2
AT 3 IN from Fiber Transceiver 3
AT 4 IN from Fiber Transceiver 4

Other

Fuse 24 VDC Input Fuse, 3 Amp
12 VDC System Circuit Fuse, 5 Amp

CI Wireless Inc.
1211 Ira E. Woods Ave., Grapevine, TX 76051

700-1001 Board (2 required) Located on the Control Module

700-1001 Board Assembly is the Ribbon Cable adapter interface to the controller module. Caution: if replacing the 700-1001 interface, it has 24 interconnecting pins to the terminal strip and the terminal strip actually has 25 pins on both sides.

When installing:

Pin 1 connects to 12VCC on the side nearest the display/power LED

Pin 1 connects to C2B on the side nearest the keypad

Refer to 700-1005 board assembly for proper interconnect to each assembly.

Ribbon Cable Assembly 700-1001 Connected To Controller Display Side

Pin	1	12 VDC	
	2	K	
	3	Ground	
	4	Digital Output 1	
	5	Digital Output 2	
	6	Digital Output 3	
	7	Digital Output 4	
	8	Digital Output 5	
	9	Digital Output 6	
	10	Digital Output 7	
	11	Digital Output 8	
	12	Digital Output 9	
	13	Digital Output 10	
	14	Unused	
	15	Unused	
	16	NO	Relay 2
	17	COM	
	18	NC	
	19	NO	Relay 1
	20	COM	
	21	NC	
	22	U EXP	
	23	DAC	
	24	A/D +	
	25	A/D -	
	26	Ground	

Ribbon Cable Assembly 700-1001 Connected to Controller Key Pad Side

Pin	1	C2B -
	2	C2B +
	3	RX +
	4	RX -
	5	TX +
	6	TX -
	7	Ground
	8	Ground
	9	D7
	10	D6
	11	D5
	12	D4
	13	D3
	14	Unused
	15	Unused
	16	+ 5
	17	Ground
	18	U1
	19	U2
	20	U3
	21	U4
	22	U5
	23	U6
	24	Ground
	25	D1
	26	D2

700-1001 Interface Module

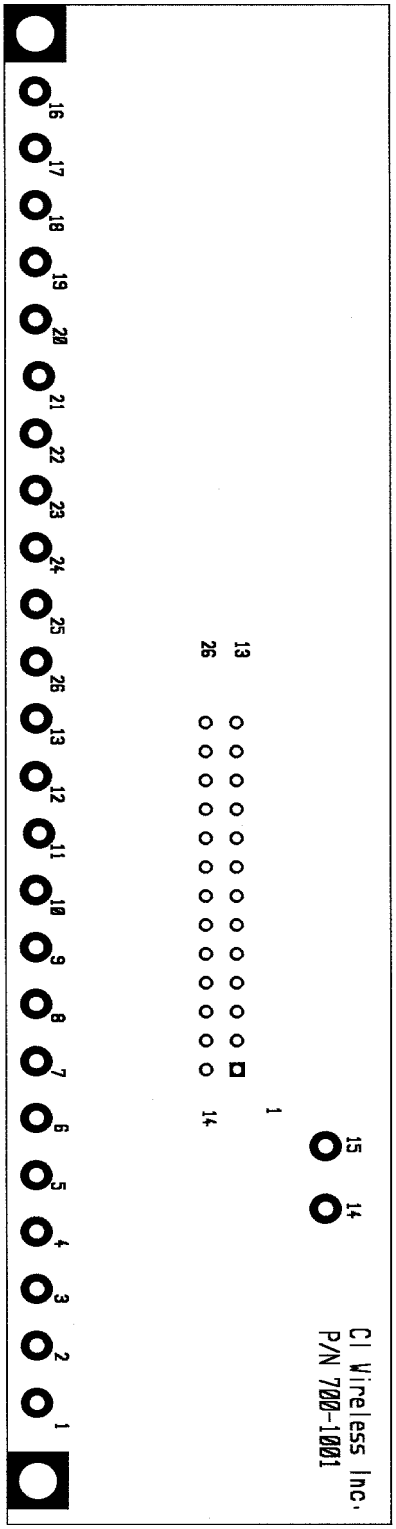

CI Wireless Inc.
1211 Ira E. Woods Ave., Grapevine, TX 76051

700-1005 Hub Mother Board

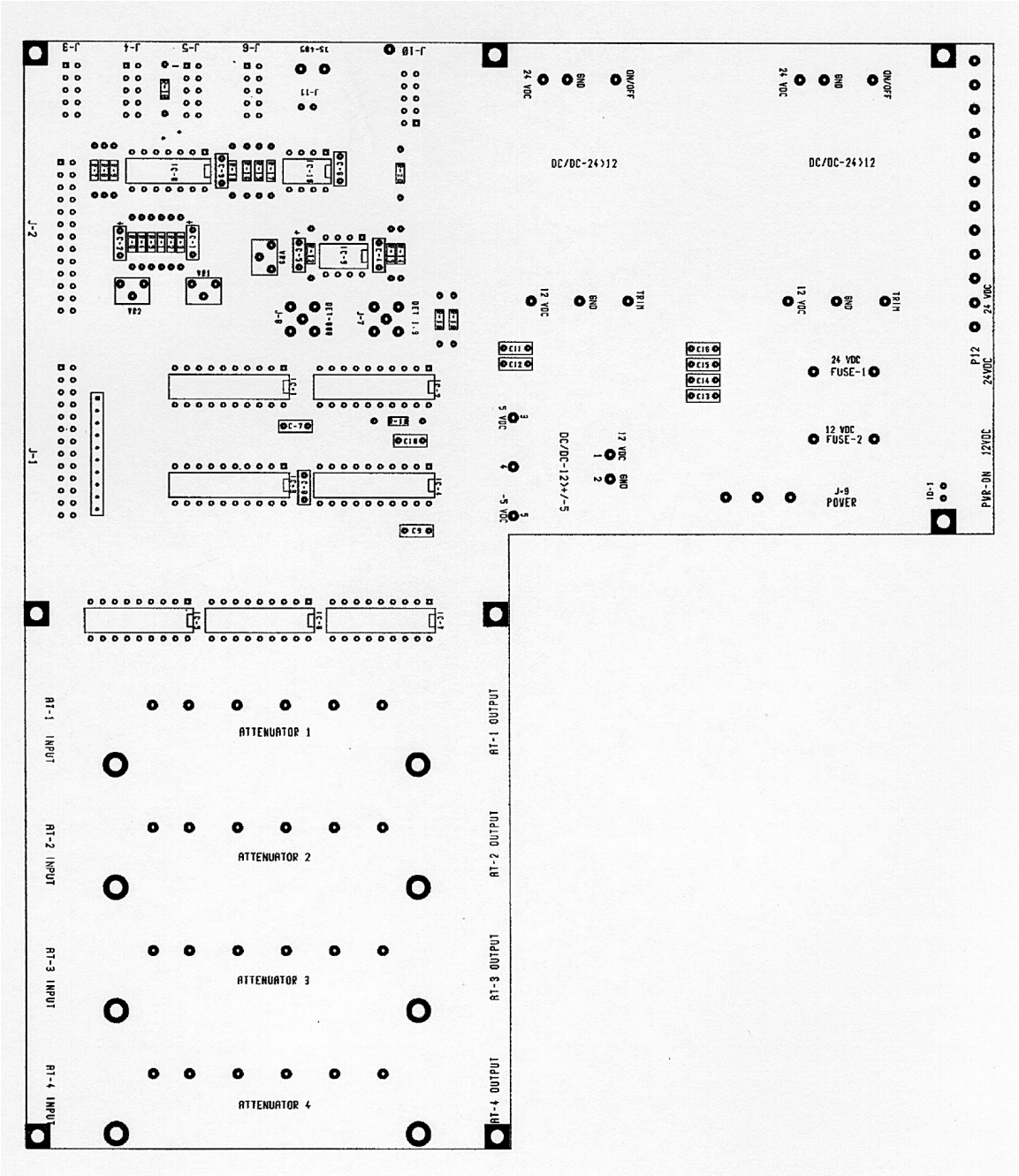

RF Modem

Reference: Figure 7.1 and 7.2

INTRECONNECTION

RF Output - 2 way splitter, RF cable: BNC/A to SMA/M
D-sub - 10 Conductor ribbon cable to 700-1003, J3

Fiber Transmitter

Reference: Figure 7.1 and 7.2

INTRECONNECTION

RF Input - Triplexer Common or Directional Coupler , Output
D-sub - 10 Conductor ribbon cable to 700-1003, J2

Fiber Receiver

Reference: Figure 7.1 and 7.2

INTRECONNECTION

RF Output - Triplexer Common or Directional Coupler , Input
D-sub - 10 Conductor ribbon cable to 700-1003, J1

Transceiver Optic Master Interconnect:

Reference: Figure xx and xx

INTRECONNECTION

RF Input (Channel C) - Transmit Splitter output, RF Cable
RF Output (Channel A, Main Receiver) - AT1 Through AT4, attenuator on 700-1005, RF vable
RF Output (Channel B, Main Receiver) - AT1 Through AT4, attenuator on 700-1011, RF vable
D-sub- - J3 through J6, 10 Conductor ribbon cable

CI Wireless Inc.
1211 Ira E. Woods Ave., Grapevine, TX 76051

7.6 Triplexer

7.7 System Interconnect

700-1001 Board (2 required) Located on Control Module

700-1001 Board Assembly is the Ribbon Cable adapter interface to the controller module.
Caution: if replacing the 700-1001 interface, it has 24 interconnecting pins to the terminal strip and the terminal strip actually has 25 pins on both sides.
Note when installing:

Pin 1 connects to 12VDC on the side nearest the display/power LED
Pin 1 connects to C2B on the side nearest the keypad
Refer to 700-1004 board assembly for proper interconnect to each assembly.

Ribbon Cable Assembly 700-1001 Connected To Controller Display Side

Pin	1	12 VDC *	
	2	K	
	3	Ground	
	4	Digital Output 1	
	5	Digital Output 2	
	6	Digital Output 3	
	7	Digital Output 4	
	8	Digital Output 5	
	9	Digital Output 6	
	10	Digital Output 7	
	11	Digital Output 8	
	12	Digital Output 9	
	13	Digital Output 10	
	14	Unused	
	15	Unused	
	16	NO	Relay 2
	17	COM	
	18	NC	
	19	NO	Relay 1
	20	COM	
	21	NC	
	22	U EXP	
	23	DAC	
	24	A/D +	
	25	A/D -	
	26	Ground	

Ribbon Cable Assembly 700-1001 Connected to Controller Key Pad Side

Pin	1	C2B -
	2	C2B +
	3	RX +
	4	RX -
	5	TX +
	6	TX -
	7	Ground
	8	Ground
	9	D7
	10	D6
	11	D5
	12	D4
	13	D3
	14	Unused
	15	Unused
	16	+ 5
	17	Ground
	18	U1
	19	U2
	20	U3
	21	U4
	22	U5
	23	U6
	24	Ground
	25	D1
	26	D2

* Illustrated on controller as 24VDC, however controller has option for 12VDC operation installed.

CI Wireless Inc.
1211 Ira E. Woods Ave., Grapevine, TX 76051

700-1004 Control Interface

Input Connectors

J1 - Controller Connection with 26 conductor ribbon cable from LCD display side and Power Led of controller

J2 - Controller Connection with 26 conductor ribbon cable from the Key pad side of the controller

J3 - 10 Conductor Ribbon Cable Connection to 700-1002 Board Assembly J4, located on Heat Sink, between Power Supply & PA

J4 - 15 Conductor ribbon Cable Connection to 700-1003 Board assembly J4, located on Fiber Optic / RF Modem Panel

RS-485- Cables to bulk head "control" Connector on base of the remote.

Jumpers

SW 1 - SLAVE ENABLE

SW 2 - Address Enable 5 through 8

Address Jumpers

SW	Address	Adjust	Voltage* Setting	SW	Address	Adjust	Voltage* Setting
3	R - 1	none	<0.7 VDC	3	5	VR5	3.7 VDC
4	R - 2	VR2	1.75 VDC	4	6	VR2	4.7 VDC
5	R - 3	VR3	2.4 VDC	5	7	VR3	5.5 VDC
6	R - 4	VR4	3.0 VDC	6	8	VR4	6 VDC

*** Monitor Test Point 1**

Controls

VR 1 - Calibration for PA detected output power, see calibration tables.(Test Point 2)

VR 6 - Calibration RSSI, DL optional/RF loss (Test Point 3)

800 MHz or 1.9 GHz remotes may be configured as Master or Slave units. Units are configured at factory normally with the differential being. Master remote is equipped with Fiber Optic RF modem panel and the controller interface module assembly is different for each unit.

700-1004-X1X	1.9 GHz Units address 1 - 4
700-1004-X2X	800 MHz units address 5 – 8
700-1004-X3X	1.9 GHz Expansion (slave) unit address 1 – 4
700-1004-X4X	800 MHz Expansion (slave) unit address 5 - 8

High Power Remote Module Tray, (SMR / ESMR)

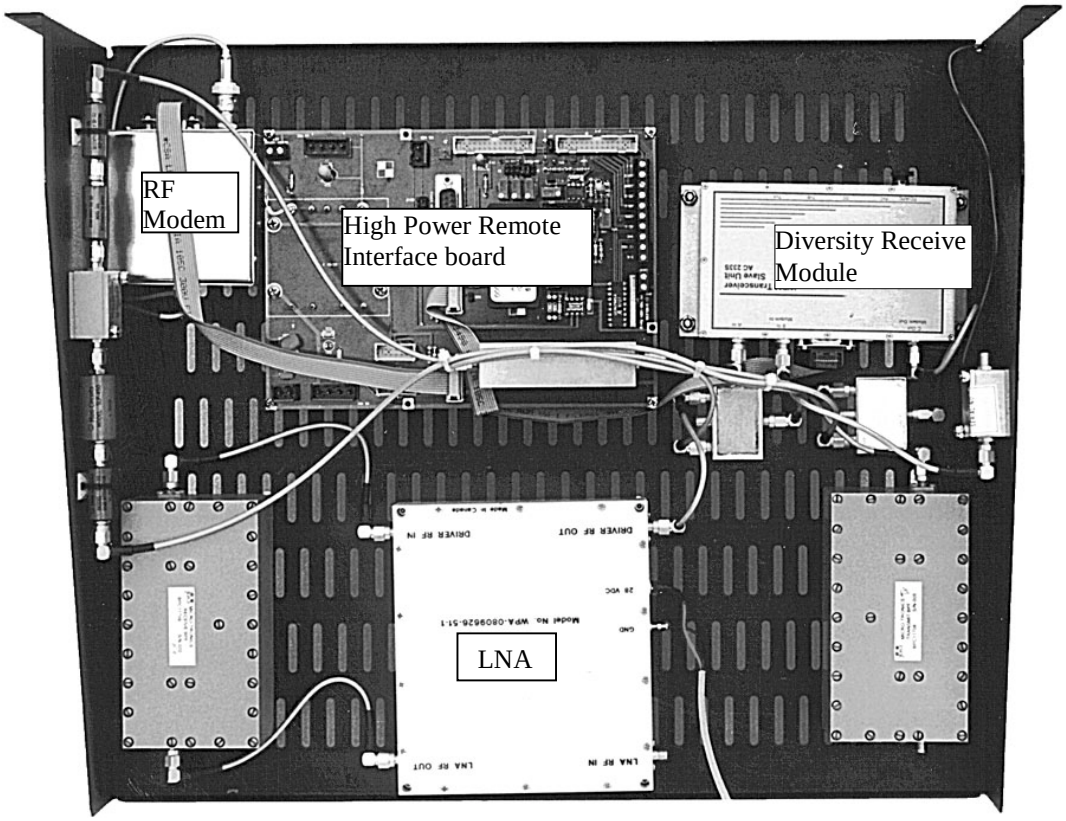

High Power Remote Module Tray, (Cellular)

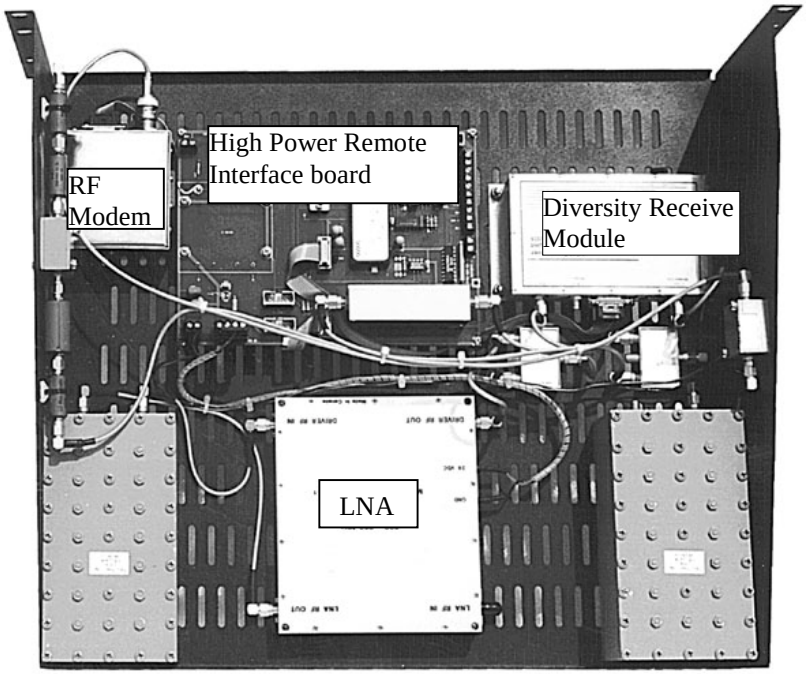

CI Wireless Inc.
1211 Ira E. Woods Ave., Grapevine, TX 76051

High Power Notch Filter Tray, (Cellular)

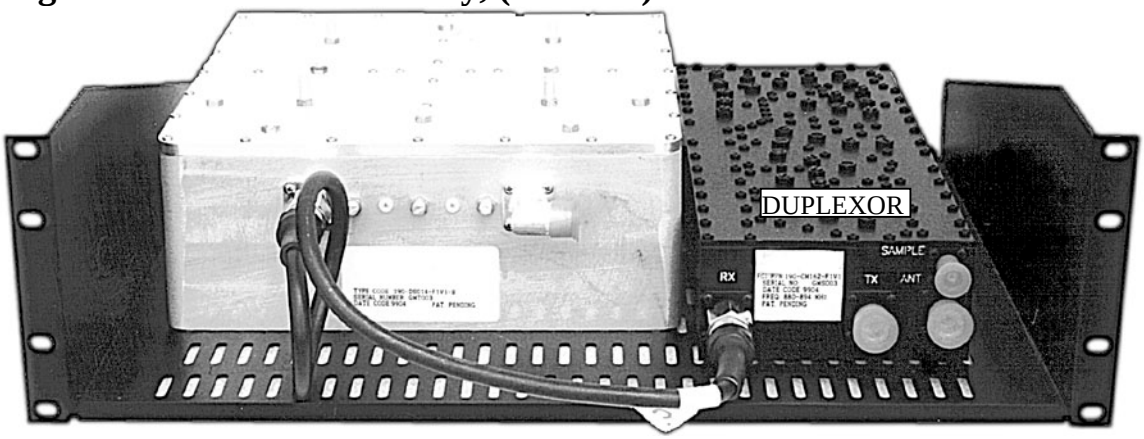

High Power Controller Panel

High Power Diversity Filter Tray, SMR / ESMR

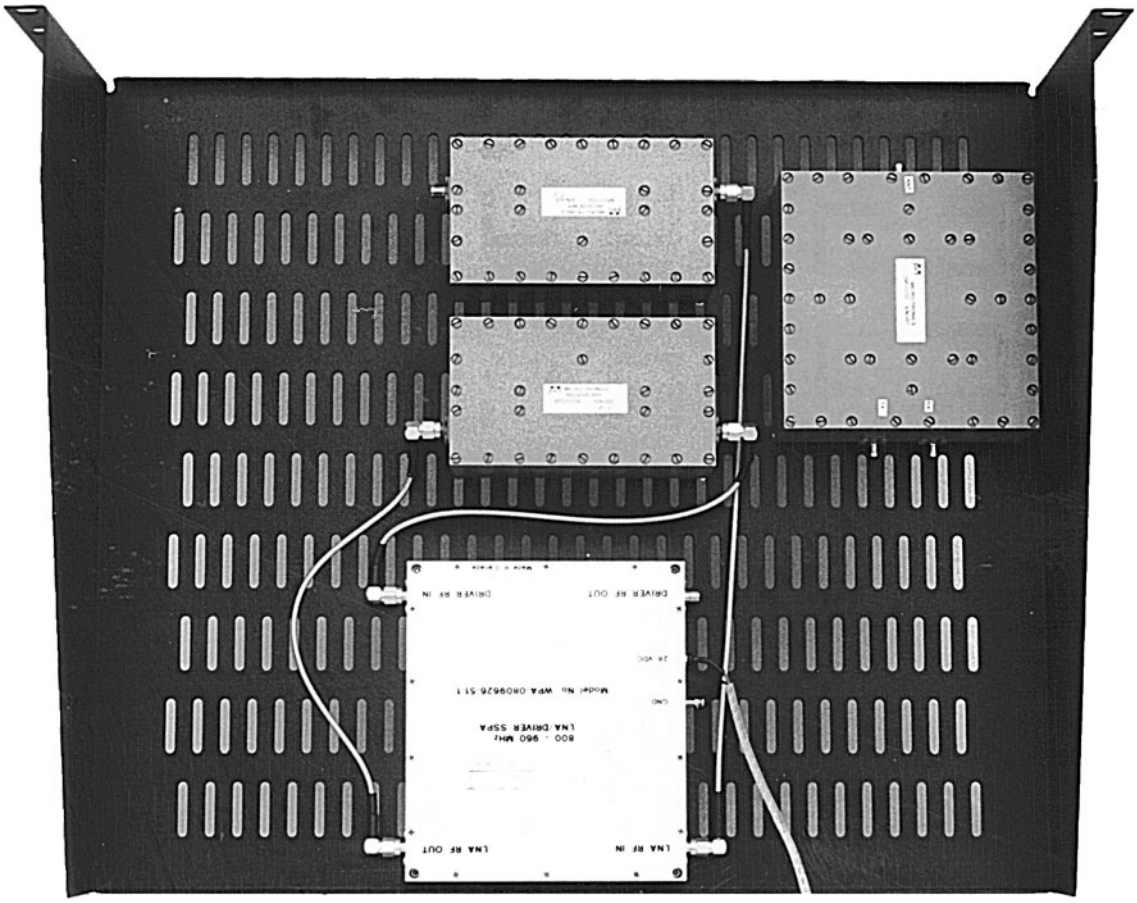

High Power Diversity Filter Panel (Cellular)

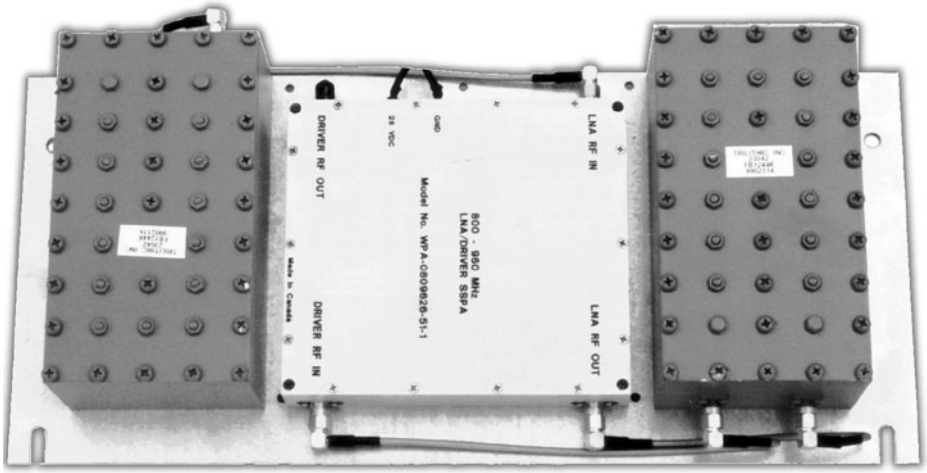

CI Wireless Inc.
1211 Ira E. Woods Ave., Grapevine, TX 76051

Power Amplifier MCA

Power Supply Panel

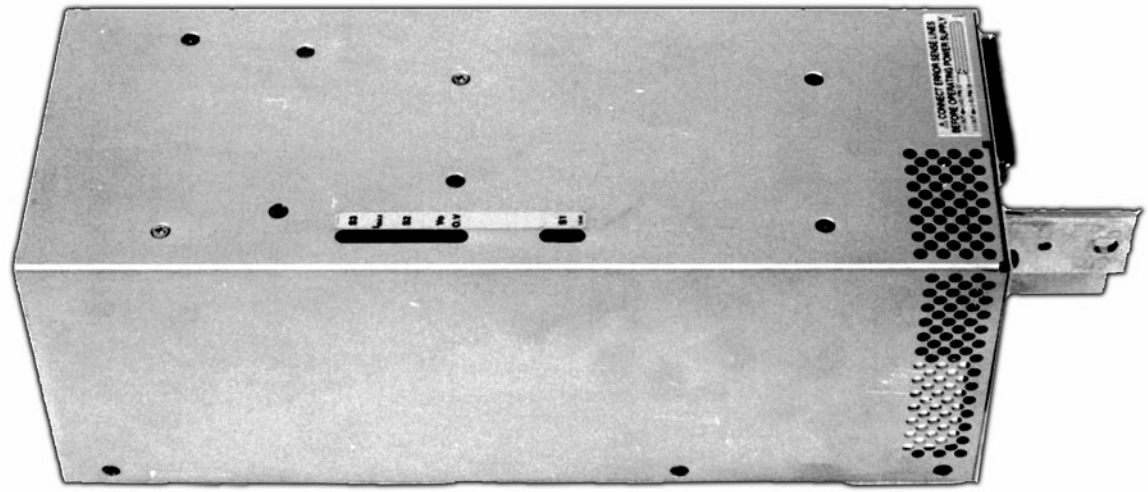

8. Software Controls

8.1.1. BASIC INTERFACE, Microcell (Remote)

The interface of the EkoCel is based on a 12 key system with a 2x20 LCD screen. While a user is not engaged in any system functions the controller is in a RUN MODE. By that meaning the controller does most of its work while running outside of the user menus.
The 12 key interface is designed around the functions the controller performs continually. The key lay out and functions of the keys are listed below.

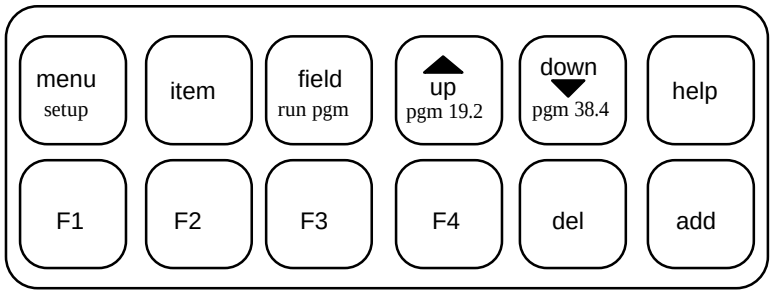

12 Key Keypad

	menu	The menu key is used primarily to advance to another set of menus or in some instances to exit or enter user menus all together.
	item	The item key has the specific function of advancing through sub-menus of a particular set of menus. For example to change the date or time after you enter the Time/Date menu pressing the item key allows a change either in the time or date.
	field	During the entry of any number or letter, the field key allows you to change the position of the cursor.
	up/down	These keys allow a character/number to be changed and may be held down to scroll more quickly. They are also used in responding to a yes or no prompt or in changing list items.
*	**help**	Displays a basic help message to aid in navigation through menus.
*	**F1**	By pressing F1 the user is shown what password level is currently in use.
*	**F2**	Displays the alarms, which are currently alarming.
*	**F3**	Displays the local Power Output Reading.
*	**F4**	Performs a Reset of all alarms.
*	**del**	Currently, this key displays software version and returns the controller to a background state.
	add	To engage the user menus, pressing the add key is required.

* - Only has functionality while user menus are engaged.

8.1.2. SYSTEM SETUP on MICROCELL UNIT CONTROLLER

Setting up the Microcell unit is done in one of two ways, Manual setup or Auto setup.

A. Manual Setup

During the initial startup of the Microcell the very first menu prompt to be encountered is the setup menu. By pressing the UP or Down key you can either select the manual or the auto setup. After choosing the correct setup method simply press the MENU key to continue with setup. During Manual setup the following parameters are necessary to set: Time; Date; System Format; RF Channels; Load. To access the menus containing the settings other than Time/Date, press the Menu key. Next to scroll through the settings press the Item key. Pressing the menu key will only take you back to the TIME/DATE menu. To EXIT the System Setup menus, press Item key until the prompt "Current Settings?", select yes and press the Menu key. The controller will then wait for up to one minute for a network update. If the hub is not yet installed the unit will proceed to normal operating status. If a connection is made, and the required input power from the base station is present, the unit will prompt the user to set up local gain. At that time the user can enter the desired DL Pwr Out. NOTE: If the gain is not set then, or in the user menus, it must be set at the Hub end.

B. Auto Setup

By simply choosing the Auto setup option the EkoCel Remote waits for the Hub to send current network settings and proceeds to set up itself accordingly. This does not mean that the user has no other responsibilities.

C. General Notes on the Controller

Remember to RESET ALL ALARMS before finishing all operations with the unit.
To EXIT From ANY point simply press the DEL key.

8.1.3. USER SETTINGS on MICROCELL UNIT CONTROLLER

A. Accessing User Menus

To access the user menus, first the ADD key must be pressed. Due to background functions operating sometimes you may have to hold the ADD key for nearly a second. The result will be the Password Entry Screen. In order to proceed to other menus a valid password must be entered. The controllers are delivered with a set of factory passwords. The factory passwords can be altered by using the supervisor password only. Once the desired password is entered press the MENU key to proceed or the DEL key to return to normal functioning. Units are set with initial default Technician 4 password of 10000 and the password comes up as 10000 on the display each time. The following are preset passwords: Supervisor - 21314, Tech 1 - 11311, Tech 2 - 11312, Tech 3 - 11313, Tech 4 - 1000

B. Readings / Controls

From the Microcell (remote) location, gain is adjusted by pressing the up and down arrows and using the field key to change the digit to be edited. DL# Pwr Cntrl: is the label for the gain control of the PA. All changes made here are NOT in real time. Once the desired value is displayed, that menu screen MUST be changed, (by pressing the MENU key), in order for the change to take effect. The controller will then display a "PLEASE WAIT" message while it sets the PA power to give the desired selected output of dB power. Depending on the amount the change, the controller process time may take up to 10 minutes and may give the appearance of locking up. To change the Hub Gain control, press the Item Key to access that menu item. UL Gain dB: is the label for the Hub Gain control. Once there, to change the gain, simply use the Field Key to select the digit and the UP and DOWN keys to alter the values. Once the desired value is

displayed, that menu screen MUST be changed (by pressing the MENU key) in order for the change to take effect remotely. The display will now read "UL Updating Please Wait.." When the update is complete the display will automatically change to reflect the Value at which it is set. Due to network latency, it may take up to 20 seconds to change the display. Setting the peak power limit is done here. The default is 34 or 38(depending on the technology type), which will prevent the power out of the Pa to exceed 34 dBm or 39dBm. To exit this set of menus, press the MENU KEY.

TX 800Bse Pwr:	XXXX	Value corresponding to Power from Base Station to Hub unit
TX 800Lzr Pwr:	XXXX	Represents the power from the base to the dl laser
Or		
TX 1.9Bse Pwr:	XXXX	Value corresponding to Power from Base Station to Hub unit
TX 1.9Lzr Pwr:	XXXX	Represents the power from the base to the dl laser
DL Pwr dB:	XXXX	Actual output power from PA at the antenna out of unit
UL Gain dB:	XXXX	The detected UL Signal strength at the hub
Peak Pwr SET:	XXXX	Refers to The Max Pwr Out the Unit will allow.

C. More Menus

By selecting 'yes' at the prompt, the user will have access to the following Menus. If not, the menuing will loop back to the 'Readings / Controls' menu.

D. Maintenance Menu

This menu is used primarily for troubleshooting, maintenance and field calibration. These readings are all network dependent, meaning that they only update when a connection between the Hub and Microcell occur. If no connection is made then all values found in this menu are invalid. The readings and their definitions are as follows:

	Tx Pwr Lzr mV:	XXXX	The voltage returned from the detector to the controller to u3. Helps to determine the TX pwr.
	UL Gain Cntrl:	XXXX	The amount of UL attenuation at the Hub unit
	UL RF Loss:	XXXX	The average amount of RF loss on the uplink path
	UL Optc Los:	XXXX	The average amount of Optical Loss uplink path
	UL Atten Set:	XXXX	Amount of direct Attenuation to the uplink path
**	DL Rssi mV:	XXXX	Voltage returned from downlink Signal Strength
**	DL RF Loss:	XXXX	The average amount of RF loss on the downlink path
**	DL Optc Los:	XXXX	The average amount of Optical Loss downlink path
	DL PA Detct:	XXXX	in mV the sensor output from the PA
	DL dac mV:	XXXX	Voltage being put out by controller to the PA
	Box Temp C:	XXXX	Tempeture in side the Remote unit in celcius

** = only available for the master remote unit.

E. Date & Time

Only the supervisor's password has access to this feature. To flip between setting the time or the date, press the ITEM key. The FIELD key changes the digit to be edited and again the arrow keys change the digit. Press the MENU key to enter when finished.

F. Event History Log

The event history log will store the last 50 events that took place on both the microcell and hub side of the network. By selecting Yes, using the Up or Down arrow and enter by pressing the menu key, scrolling through the event history will be possible by pressing the 'ITEM' key. Events will be displayed with the most recent date at the top, the remote number and the alarm or event originated on the second line. Remember, that the remote number for the hub is "0". To exit the menu, simply press the Menu key then select no, using the Up or Down arrow and enter by pressing the Menu key again.

G. Set New Password

Only the supervisor's password has access to this feature also. While it is possible to access this menu from the Microcell unit, the changes made will be reset through to the network standard within 20 seconds. *This menu is only functional at the hub*.

H. Remote Alarms Reset

To select between the "yes" or "no" simply press the UP or DOWN. To exit the menu, press MENU. NOTE! Due to network latency it may take up to 20 seconds for the Hub alarms to reset.

I. Exit Menu

"Current Settings: y/n ". Select YES and press MENU to exit all Menuing with current settings. By pressing the ITEM key, will give access to the TOTAL RESET?: y/n screen. *CAUTION: By selecting YES and pressing menu, WILL RESET ALL Users defined values to Factory Default*, and the *Microcell unit will require setting up again*. BE VERY CAREFUL with this menu.

J. AUX Controls Menu

The first prompt will be "More Controls?: y/n " if yes is selected and the menu key is pressed, then access to the System settings is given. These settings include: System Type , RF Channels, Batt Backup. If Batt Backup has 'Yes' selected then controls for : Batt Test Hour and Test for Min, will be accessible.

8.1.4. ALARMS on MICROCELL UNIT CONTROLLER

A. Viewing

To view alarms currently alarming simply press the F2 key from any menu, or if not engaged in a menu press the ADD key then press F2. After viewing, press DEL to return to normal functioning. To return to menu items simply press the Menu key. To view the alarm history log, enter menus and press the menu key until the "Event History…..View log?" is displayed, then select Yes using the Up or Down arrow and enter by pressing the menu key. The alarms will be displayed in log format. Format consists of: Date Remote Number and Alarm. For example: 03-24-98 0 H! Optical 1. If the remote number is 0 then it must be the hub.

B. Resetting

Local: Press the F4 key form any menu. If not in menus press the ADD key then the F4 key. To resume menuing or enter menus press the MENU key other wise press the DEL key.

Hub: Press the F4 key WAIT 10 seconds then press the F4 key again (no need to wait on second push). To resume Menuing or enter menus press the MENU key other wise press the DEL key.

C. Alarms

There are basically 12 alarms that could alarm at the Microcell unit. They are:

(# = Microcell Address)

!R# Laser	=	Laser Alarm
!R# Optical	=	Optical Loss Alarm
!R# Laser Temp	=	Laser Temperature
!R# Pa Temp	=	PA Temperature
!R# Box Temp	=	Box Temperature
!R# Intrusion	=	Door Alarm
!R# RF Pwr Out	=	RF Output Power Fail
!R# Ovrdr Pwr Aj	=	Overdriving Power Adjustment.
!R# Batt Power	=	Low or No Battery (only seen if Battery Enabled)
!R# Main Power	=	Drop or failure of Main power.
!R# Fan Fail	=	Fan Failure or Problem
!R# User 1	=	User 1 Hi/Lo from D6 On Remote Board

8.2.1. BASIC INTERFACE of HUB UNIT CONTROLLER

The interface of the EkoCel is based on a 12 key system with a 2x20 LCD screen. While a user is not engaged in any system functions the controller is in a RUN MODE. By that meaning the controller does most of its work while running outside of the user menus. The 12 key interface is designed around the functions the controller performs continually. The key lay out and functions of the keys are listed below.

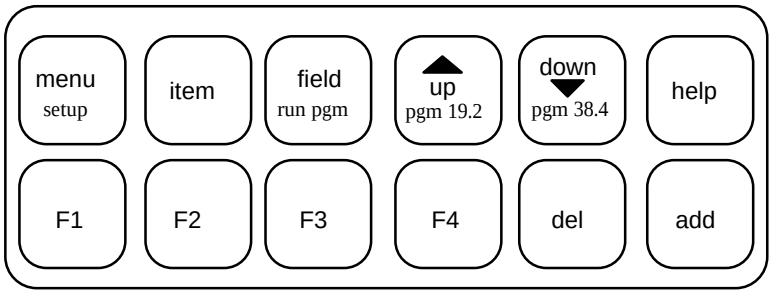

12 Key Keypad

menu The menu key is used primarily to advance to another set of menus or in some cases to exit or enter user menus all together.

item The item key has the specific function of advancing through sub-menus of a particular set of menus. For example, to change the date or time after entering the Time/Date menu , pressing the item key allows changes in either the time or date.

field During the entry of any number or letter, the field key allows you to change the position of the cursor.

up/down These keys allow a character/number to be changed and may be held down to scroll more quickly. They are also used in responding to a yes or no prompt or in changing list items.

* **help** Displays a basic help message to aid in navigation through menus.
* **F1** By pressing F1 the user is shown what password level is currently in use.
* **F2** Displays the alarms which are currently alarming.
* **F3** Displays the UL Gains.
* **F4** Performs a Reset of all alarms.
* **del** Currently, this key displays software version and returns the controller to a background state.
add To engage the user menus pressing the add key is required.

* - Only have functionality while user menus are engaged.

CI Wireless Inc.
1211 Ira E. Woods Ave., Grapevine, TX 76051

8.2.2. SYSTEM SETUP ON THE HUB CONTROLLER

Setting up the hub unit is done in one of two ways, Manual setup or Auto setup.

A. Manual Setup

During the initial startup of the Hub the very first menu prompt to be encountered is the setup menu. By pressing the UP or Down key you can either select the manual or the auto setup. After choosing the correct setup method simply press the MENU key to continue with setup. During Manual setup the following parameters are necessary to set: Time; Date; System Format; RF Channels; Load. To access the menus containing the settings other than Time/Date, press the Menu key. Next to scroll through the settings press the Item key. Pressing the menu key will only take you back to the TIME/DATE menu. To EXIT the System Setup menus, press Item key until the prompt: "USE CURRENT SETTINGS? " Select yes and press menu. It will also be necessary to manually set the gain.

B. General Notes on the Controller

To EXIT From ANY point simply press the DEL key, or select "yes" at the "Exit Current settings?" menu.

8.2.3. USER SETTINGS on HUB CONTROLLER

A. Accessing User Menus

Hub - to access the user menus first the ADD key must be pressed. Due to background functions operating sometimes you may have to hold the ADD key for nearly a second. The result will be the Password Entry Screen. In order to proceed to other menus a valid password must be entered. The controllers are delivered with a set of factory passwords. The factory passwords can be altered by using the supervisor password only. Once the desired password is entered press the MENU key to proceed or the DEL key to return to normal functioning. Units are set with an initial default passwords: Supervisor - 21314, Tech 1 - 11311, Tech 2 - 11312, Tech 3 - 11313, Tech 4 - 1000.

B. Readings / Controls

Hub - gain is adjusted by pressing the up and down arrows and using the field key to change the digit to be edited. UL Gain Cntrl: is the label for the Hub Gain control. Changes made here are NOT in real time, due to the digitally controlled attenuator. To change the Microcell Gain control, press the Item Key to access that menu item. Once there, to change the gain, simply use the Field Key to select the digit and the UP and DOWN keys to alter the values. Once the desired value is displayed, that menu screen MUST be changed (by pressing the ITEM or MENU key) in order for the change to take effect. DL# Pwr Cntrl: is the label for the gain control of the PA. Once the desired value is displayed, that menu screen MUST be changed (by pressing the MENU key) in order for the change to take affect remotely. Due to network latency, and control setting delay, it may take up to 15 minutes to change the display. To exit this set of menus, press the MENU KEY. If no remote detected, the up link gain control can still be adjusted by pressing the ITEM key to advance from the no remotes on line screen to the appropriate up link gain control. Note: If there is too little or no signal strength a menu screen will appear to alert the user of the fact and prohibit him from changing the DL Gain on ANY remotes. You can also set the peak power limit here. The default is 34, which will prevent the power out of the PA to exceed 34 dBm.

TX 1.9Bse Pwr:	XXXX	Value in dB corresponding to Power from Base Station to Hub
TX 1.9Lzr Pwr:	XXXX	Value in dB representing power to the lasers during downlink
AND / OR		
TX 800Bse Pwr:	XXXX	Value in dB corresponding to Power from Base Station to Hub
TX 800Lzr Pwr:	XXXX	Value in dB representing power to the lasers during downlink
UL Gain # dB:	XXXX	Value in dB corresponding to the signal strength from Microcell to the Hub
DL # Pwr dB:	XXXX	The approximate power in dB the PA is radiating at R#
DL # Peak Pwr:	XXXX	The Peak power setting for the R#

C. More Menus

By selecting ‘yes’ at the prompt the user will have access to the following Menus. If not, the menuing will loop back to the ‘Control Menu’.

D. Maintenance Menu

This set of menus contain many readings that will be useful during the calibration and or trouble shooting after problems occur. Some of these readings update in real time, but most are network related an update every 20-30 seconds. . If changes occur to the readings the user will NOT see them unless the Item key is used to scroll around back to it, then the value will be updated. If the second is true and the remote is not installed, ANY information displayed will be invalid. The readings and their definitions are as follows:

	Tx Pwr Lzr mV:	XXXX	The voltage returned from the detector to the controller to u3. Helps to determine the TX pwr.
	UL # RF Loss:	XXXX	The average amount of RF loss on the uplink path
	UL # Optc Los:	XXXX	The average amount of Optical Loss uplink path
	UL # Atten Set:	XXXX	Amount of direct Attenuation to the uplink path
	UL # Rssi mV:	XXXX	Voltage returned from Uplink Signal Strength
**	DL # Rssi mV	XXXX	Voltage returned from Downlink Signal Strength
**	DL # RF Loss:	XXXX	The average amount of RF loss on the downlink path
**	DL # Optc Los:	XXXX	The average amount of Optical Loss downlink path
	DL # Gain mV:	XXXX	Voltage being put out by controller to the PA.
	DL # Pwr SET:	XXXX	User Defined in Gain Cntrls. Amount of PA output power at #

E. Date & Time

Only the supervisor's password has access to this feature. To flip between setting the time or date, press the ITEM key. The FIELD key changes the digit to be edited and again the arrow keys change the digit. Press the MENU key when finished.

F. Event History

The events history log will store the last 50 events to take place on both the microcell and hub side of the network. By selecting "yes" at the menu prompt, scrolling through the event history will be possible by pressing the 'ITEM' key. Events will be displayed with the date at the top, the remote number and the alarm or event originated on the second line. Remember that the remote number for the hub is "0". If at any time you wish to exit the menu simply press the Menu key then select no and press the Menu key again.

G. Set New Password

Only the supervisor's password has access to this feature also. While it is possible to access this menu from the Microcell unit, the changes made will be reset through to the network standard within 20 seconds. This menu is only functional at the hub. The following are preset passwords: Supervisor - 21314, Tech 1 - 11311, Tech 2 - 11312, Tech 3 - 11313, Tech 4 - 1000

H. Remote Alarms Reset

To reset specific Microcell's alarms, press Item to select Microcell then "Yes" or "No" selections are made by simply press the UP or DOWN. Exit the menu by pressing MENU. NOTE! Due to network latency it may take up to 20 seconds for the Microcell alarms to reset.

I. RS 232 PORT MODE

This menu is designed to allow communication to the controller through the RS 232 port. Here, if 'none' is selected, the controller will not acknowledge any incoming data or commands through the RS 232 port. If 'Terminal' is selected the controller will continually monitor the 232 port for incoming commands. The passwords required to access the controller through the terminal are the same as the passwords used to access the controller through the keypad. A Modem will not work if in this state (Terminal selected). If 'modem' is selected, the controller will initialize the modem and wait for it auto answer. Only after carrier detection takes place will the controller acknowledge incoming data. A terminal emulator will not work if in this state (modem selected).

J. Exit Menu

"Current Settings: y/n ". Select YES and press MENU to exit all Menuing with current settings. By pressing the ITEM key, will give access to the TOTAL RESET?: y/n screen. *CAUTION: By selecting YES and pressing menu, WILL RESET ALL Users defined values to Factory Default,* and the *Microcell unit will require setting up again.* BE VERY CAREFUL with this menu.

K. AUX Controls Menu

The first prompt will be "More Controls?: y/n " if yes is selected and the menu key is pressed, then access to the System settings is given. These settings include: System Enable, R# System Type , R# RF Channels, R# Batt Backup. If Batt Backup has 'Yes' selected then controls for : R# Batt Test Hour and R# Test for Min, will be accessible.

** Will be displayed for the remote master only.

8.2.4. ALARMS on HUB UNIT CONTROLLER

A. Viewing

To view alarms currently alarming simply press the F2 key from any menu, or if not engaged in a menu, press F2 after pressing the ADD key. After viewing, press DEL to return to normal functioning. Return to menu items by simply pressing the Menu key. To view the alarm history log, first enter menus and press the menu key until the "Event History…..View log?" Select Yes, using the Up or Down arrow and the menu key. The alarms will be displayed in log format. Format consists of: Date, Remote Number and Alarm. For example: 03-24-98 0 H! Optical 1. If the remote number is 0 then it must be the hub.

B. Resetting

Hub: Press the F4 key form any menu. If not in menus press the ADD key then the F4 key. To resume Menuing or enter menus press the MENU key other wise press the DEL key.

ALL: Press the F4 key WAIT 10sec then press the F4 key again (no need to wait on second push). To resume Menuing or enter menus press the MENU key other wise press the DEL key.

Microcells: This can be done only by engaging the menu system and going to the Reset Alarms specific menu.

C. Alarms (current as of 12/30/98)

Hub: Alarms on the Hub unit will also display on any remote. Listing them:

!H Laser	=	Laser Alarm
!H Optical	=	Optical Loss Alarm
!H Prime Pwr	=	Primary Power
!H Com Link #	=	Communications Link #
!H Bs Pwr In	=	Insufficient Power from the base station.
!H User1	=	User Alarm From External digital input

8.3 RS 232 Port Communications.

A. Hyper Terminal Connection

To use the hyper terminal capabilities of the EkoCel™, you must have the enclosed adapter attached to the controller. If no adapter was included please contact the factory for replacement. This part # is 900-1000-072, consisting of the D-Sub/9 Pin Adapter, 6' of cable and a RJ-12 connector.

Settings for your terminal emulator should be:

Direct connect to comport
9600 bps
8 bits
1 Stop bit
No parity
No flow control

Once the setup of the emulator is ensured and connection is made, go to the menu "RS 232 Port Mode" and select Terminal from the list of choices, if a modem is being used, select MODEM. To access the controls and menus of the EkoCel™, a VALID password MUST be entered. The passwords are the same as the unit passwords supplied earlier in this manual. The following is a list of all commands within the menus.

Note: All commands can be typed in all Lowercase or Uppercase But not a mixture(ie..Set Ul 23).

Terminal Interface Displays:

Maintenance Screen

Command to show:
MAIN

Shows below:

		1.9GHz				800MHz			
		R1	R2	R3	R4	R5	R6	R7	R8
Hub									
Tx Base Station Input	(dBm)	28.4	n/a	n/a	n/a	n/a	n/a	n/a	n/a
Tx Laser Power	(dBm)	-1.6	n/a	n/a	n/a	n/a	n/a	n/a	n/a
Remote									
UPLINK									
Attenuation	(dB)	23	n/a	n/a	n/a	n/a	n/a	n/a	n/a
RSSI	(mV)	1082	n/a	n/a	n/a	n/a	n/a	n/a	n/a
RF Loss	(dB)	2	n/a	n/a	n/a	n/a	n/a	n/a	n/a
Optical Loss	(dB)	1	n/a	n/a	n/a	n/a	n/a	n/a	n/a
DOWNLINK									
Dac	(mV)	3122	n/a	n/a	n/a	n/a	n/a	n/a	n/a
PA Detect	(mV)	2544	n/a	n/a	n/a	n/a	n/a	n/a	n/a
Peak Power	(dBm)	34	n/a	n/a	n/a	n/a	n/a	n/a	n/a
RF Loss	(dB)	2	n/a	n/a	n/a	n/a	n/a	n/a	n/a
Optical Loss	(dB)	1	n/a	n/a	n/a	n/a	n/a	n/a	n/a
TEMPERATURE	(˚C)	24.6	n/a	n/a	n/a	n/a	n/a	n/a	n/a

Controls / Readings Screen:

Command to show:

PARM

Shows below.

		1.9GHz				800MHz			
		R1	R2	R3	R4	R5	R6	R7	R8
Hub									
Uplink Gain	(dB)	28.4	n/a	n/a	n/a	n/a	n/a	n/a	n/a
Downlink Power Output	(dBm)	-1.6	n/a	n/a	n/a	n/a	n/a	n/a	n/a
Peak Power	(dBm)	34	n/a	n/a	n/a	n/a	n/a	n/a	n/a

Commands To Change above:

```
SET UL [remote #] [value]
SET DL [remote #] [value]
SET PK [remote #] [value]
```

Passwords Screen

Command to show:

'PASS' or 'pass'

Shows below.

System Passwords				
User: 1	2	3	4	5
21314	11311	11211	11011	10000
Supervisor	Tech1	Tech2	Tech3	Tech4

Command to change above:

SET PW [id] [value] where id is user # and value is 5 digit number

Event History Screen

Command to show:

EVNT [address#]	Displays alarm history only for address#1-8
EVNT	Displays All alarm history at hub unit

Shows below.

```
>_____________________________System Log For Hub_________________________________
>
>   Hub = not set
>
>ID# Date:      Time:    R#  Event    Value Creator
> 1  06-05-1998 11:11:33 0 Pw :       10000 5
> 2  06-03-1998 14:54:04 1!R RF Pwr Out     0
> 3  06-03-1998 14:40:16 0 Total Rst      0 0
> 4  06-03-1998 14:40:16 0 Alarms Rst     0 6
```

Notes: the suffix 'clrd' means that the alarm has reset itself

Commands to Clear History:

CLR EVNT	clears entire log for ALL.
CLR EVNT [address#]	clears entire log for specified address
CLR ILOG [address#] [#id]	clears specified event from the log of address

Alarming Alarms Screen

Command to show:

ALRM [address#]	Displays alarms from specified address#1-8
ALRM	Displays All ALARMS

Shows below.

```
>HubAlias
>Current Alarms:
>ID   12/12/98  13:31:33
>1    PA Temp
>0    AC Pwr
>0    LOW Input Pwr
>1    Intrusion
```

Commands to reset:

CLR ALRM [address#]	Clears only alarms at specified address#0-8
CLR ALRM	Clears all alarms in system

CI Wireless Inc.
1211 Ira E. Woods Ave., Grapevine, TX 76051

Configuration Screen:

Command to show:
"CONF" or "conf"

Shows below.

```
______Configuration Screen________
Date: 05/05/98        Time: 12:12:12
      System: alias
Remote 1 : alias   : Offline
Remote 2 : alias   : Online
System Type: CDMA
RF Channels : 2
Batt Enabled: yes
Batt hour: 12
Batt mins: 5
Remote 3 : alias   : Offline
Remote 4 : alias   : Offline
Remote 5 : alias   : Offline
Remote 6 : alias   : Offline
Remote 7 : alias   : Offline
Remote 8 : alias   : Offline
```

Commands to Change:

SET DT [value]	Valid date format xx/xx/xx
SET TM [value]	Valid Time format XX:XX:XX
SET TY [tech type]	Technology type: CDMA,GSM,TDMA,AMPS,ESMR,OTHER
SET CH [value]	valid number 1-24
SET BA [yes/no]	If battery backup is available.
SET BH [value]	Valid hour in 24hr format(0-23)
SET BM [value]	(0-40) Amount of AutoExercise at Hour

Miscellaneous Commands:

BYE or EXIT	exit hyper terminal
HELP	Show help screen
MENU	Show main menu
ALIS	Displays all the User defined Alias's
SET AL [address#] [value]	Sets the Alias of specified address.
TABL [address#]	Displays Calibration tables for unit

Section 9. Installation

INSTALLTION OF THE EKOCEL™ 1.9 FIBER OPTIC MICROCELL:

NOTE 1: Installation and system set up should only be performed by qualified technicians. The user is cautioned that modification or changes to this device not expressly approved by the party responsible for compliance could void the user's authority to operate this equipment.

NOTE 2: Manufacture's rated output power of this equipment is for single carrier operation.
For situations when multiple carrier signals are present, the rating would have to be reduced by 3.5 dBm, especially where the output signal is re-radiated and can cause interference to the adjacent band users. This power reduction is to be determined by means of input power or gain reduction and not by an attenuator at the output device.

Note 3 :This device complies with Part 15 of the FCC Rules. Operation is subject to the condition that this device does not cause harnful interference.

9.1 Introduction

EkoCel is quick and easy to install, using a minimum set of common tools. This section will provide the basic steps to performing the installation of EkoCel. *Please read complete instructions before beginning assembling.*

9.2 Getting Started

Unpack all of the boxes and insure all of the material is included for your installation requirements and undamaged in shipment. instructions before

List of Basic Equipment:

Hub Unit, 24 Vdc
Microcell Unit, 100-220 Vac

Additional Optional Hardware:

WDM- Hub Panel with WDM
WDM installed in Microcell Unit
Fiber Jumper cables, 4 each, 1 meter length
Hub AC Option- AC power supply installed in unit
Expansion Unit Control Cable
Battery Back Up Unit for Microcell Unit with interconnect Cable

Determine and secure additional material required, base station interconnect coaxial cable, antenna, coaxial cable, fiber optic jumpers, etc.

Slave remote units will require two coaxial cable jumpers and one control cable.

9.3 Mounting Hub Hardware

-Mount Hub unit and secure in base station cabinet or another 19 inch EIA cabinet.
-Connect Base station transmit and receive cables.
-Connect primary power, 24 Vdc or optional 115 VAC.
-Connect fiber Optic cables.
-Wave Division Multiplexer (WDM) Option.
Mount WDM assembly directly above or below the Hub Rack assembly.

Using the 1-meter fiber optic jumpers provided connect the Hub optical unit to the WDM

Hub-FO Input to WDM-1310
- FO Output to -1550

Fiber Optic link cable will connect to WDM connection marked FC/APC

.

DANGER: INVISIBLE LASER RADIATION AVOID DIRECT EXPOSURE TO BEAM.

-Apply Power and follow set up instructions.

IMPORTANT! Before performing maintenance on any internal module, make sure power is OFF.

9.4 Mounting the Microcell Unit

-Mount Microcell unit
-Connect coaxial cable to antenna
-Connect fiber Optic cables.
-Wave Division Multiplexer option:

WDM unit is mounted internally in the unit if it was ordered as an option.
Fiber Optic cables were shipped separately to avoid damage, connect as follows:

Fiber Module-Fiber Input to WDM-1550
- Fiber Output to WDM-1310

Fiber Optic link cable will connect to WDM connection marked FC/APC

-Connect Primary AC power.

Connect Back Up Battery option or DC power. (There is no switch on the DC power connection to the unit. Power may be removed or connected with the connector on the bottom of the unit or by removing the DC fuse.)

DANGER: INVISIBLE LASER RADIATION AVOID DIRECT EXPOSURE TO BEAM.

-Apply Power and follow set up instructions.

IMPORTANT! Before performing maintenance on any internal module, make sure power is OFF.

9.5.1 Down Link Set Up for EKO-8R System

Down Link set up for an 800MHz system may be completed with any known number of RF channels transmitting. Determine the proper output power level.

Display, * *Readings/Controls*: Adjust base station input power to TX PWR IN.

Number of Total Active System RF Channels	800R Output Power Per Channel	
	Watts	dBm
1	50	47
2	25	44
4	12	41
8	7	38
16	3	35
32	1.5	32

Maximum Composite Power levels:

Lazer Power Input	0 dBm
Base Station Input Power	30 dBm
DL Power Out	47 dBm

Adjustment to these levels will allow EkoCel to operate to the proper power level as indicated above.

Display	
DL # Pwr dB:	Set to XX dBm (set to desired output level in dBm according to table) Press menu key, unit will self tune within 10minutes. Typically within 2 – 3 minutes for Peak Power levels settings.
DL # Peak Pwr:	This level should be set no more than 1dB above the desired maximum output power limit. This feature will reset the remote to the desired output power should the power exceed the maimmum output power limit.

Note: # - indicates remote under setup.

System will automatically reduce output power level if it exceeds 48dBm, which is the Maximum peak limit setting,

CI Wireless Inc.
1211 Ira E. Woods Ave., Grapevine, TX 76051

9.5.2 Up Link System Set Up for the System

Up Link system set up for the system: The gain at the remote is a fixed at maximum this prevents system level changes from effecting the system noise figure at any optical path loss up to 20 dB RF loss. Adding attenuation at the hub makes UL system level adjustments. The RF modem detects the up link modem carrier RSSI level and adjustments are made using this pilot carrier as a reference. (RSSI level is updated once every 10 seconds).

Display

UL # Gain dB: XX dB (set to desired signal gain level)

Set desired Up Link Gain and press the Menu key. We suggest a level for RF UL 1 Detect between 4 dB and 6 dB. This will minimize system noise figure contribution maintaining EkoCel specified performance of <6 dB noise figure. Repeat steps for additional remote units.

System Set Up is Complete.

9.6.0 Calibration Table - U2

Remote RF Modem pilot level to Hub RF Modem RSSI

Refer to calibration tables provided with each unit OR Download tables Using terminal mode at hub.

9.6.1 Calibration Table - U3

RF Input at Laser RF In. Tx 1.9Lzr Pwr: ,or Tx 800Lzr Pwr:

Refer to calibration tables provided with each unit OR Download tables Using terminal mode at hub.

9.6.2 Calibration Table – U5

RF Output from PA at Remote Unit. DL # PA Detct:

Refer to calibration tables provided with each unit OR Download tables Using terminal mode at hub.

Note: All values on Calibration Tables are in mV.

10.0 Trouble Shooting

For additional technical support or questions regarding the application of EkoCel™, please call 817 416-0583.

10.1 Trouble Shooting Guide

Hub

Problem	Check	Corrective Action
No Power	AC Fuse	Replace
	24 VDC Fuse	Replace
	12 VDC Fuse	Replace
	Power Source	Reconnect or repair
Hub Optical RX Alarm	LED Indicator On front panel	
	Jumper Laser Output to Optical Input, LED still not lit and/or Alarm still present	Replace Fiber Transceiver at the Hub
	LED lights with Jumper, check Remotes laser optical output for proper level, if Low or Inoperative	Replace Fiber Transmitter at the Remote
	Optical Output Good	Check for optical cable break or loose cable
Laser Alarm	LED Indicator on front panel, good optical output low or zero	Replace Fiber Transceiver
Communications Alarm	Fiber Laser and Optical receive alarms (Refer to optical RX or laser alarm for troubleshooting)	Replace defective fiber transceiver, transmitter or repair optical cable
	Failure on all remotes proceed	
	Failure on one remote go to remote	
	Comm Link failure	
	Lasers Good, Check LED	
	Light Operation Sequence on Hub RF Modem	
	Power On - *Not lit* check fuse, in modem	Replace fuse
	Fuse good if power source checks good	Replace modem
	TX LED Lights - OK	
	Does *not* light - Check Input signal J10 - Pin 3	
	Signal OK	Replace Modem
	No Signal	Refer to Controller trouble shooting & 700-1005 Board Assy
	RX LED - Lights, check signal J10 - P3	Trouble shoot Controller & 700-1005 Board Assy
	No Signal	Replace Modem
	No light (No response from remote)	Trouble shoot Remote &/or modem
	(If you have a signal source apply -90 dBm RF signal to RF the Modem, input RX LED should light, reduce RF signal to <-105	

CI Wireless Inc.
1211 Ira E. Woods Ave., Grapevine, TX 76051

	before RX LED turns off. This checks squelch setting.) Modem normally shipped set to 460 MHz.	
700-1005 Commlink (RS 485) 485 Transmit	Check for signal from controller with oscilloscope across TS-485 terminals, if none	Reprogram Controller Still none Replace Controller
	Signal on TS 485 but still no signal on J-10 Pin3	Replace 700-1005
485 Receive	Signal on J-10 Pin 2, no signal across TS 485	Replace 700-1005
	Signal on TS 485, no response from controller	Reprogram Controller (no change-replace controller)
TX Power Input -12 to +3 dBm	Low RF detected Input	Check Base Station Output
	High	Reduce Base Station output power or add attenuation
RF Up Link Signal Low /High	Gain Low	Reset Up Link Gain Control
	Gain High	Set Up Link Gain Control
	Gain Low cannot adjust one or all Remote paths	1st Go to proper Remote Link path tests 2nd Go to Proper Remote Link RF Modem path tests
	Check Fiber Loss	Repair Fiber
Down Link Power Output Low or Alarm	Check Optical Loss	Repair fiber cable, Go to optical path tests
	Check TX Power Input - *if Low*	Re-adjust or repair source, *if good*
	Check Rf Output @ Duplexer TX Input - *If Low*	Replace PA
	Good - Check at Duplexer Output	Replace Duplexer
	Good -	Replace Polyphaser
Up Link Gain Control	Check CommLink	Refer to CommLink Trouble shooting
	No Response, Check 700-1005	If defective, replace 700-1005
Down Link Gain Control	Refer to Down Link Power Output	Refer to DL Power Output Trouble shooting
	Refer to CommLink	Trouble shooting
	If Ok, Check Controller is adjusting DAC output , *if* DAC Adjusting	Replace PA
	No DAC adjusting at Remote One Remote only	Replace and/or reprogram remote controller
	All remotes from hub	Replace and/or reprogram Hub controller

Trouble Shooting Table		
Microcell (Remote) Unit		
Problem	**Check**	**Corrective Action**
Optical RX	Check LED on Fiber Optic RX Jumper Laser out to optical input - *if failed*	Replace Fiber Optic Rx
	OK	Trouble Shoot Hub laser and/or optical cable
Laser Alarm	Check Fiber transceiver optical power & LED	Replace Fiber transmitter
Laser Temp	Check if housing temperature is between -30° & 70°C	Replace fiber transmitter
PA Temp Alarm	Check current draw, High - check Housing temperature	Replace PA
RF Power Output		Repeat Trouble shooting steps under Hub section
Enclosure Temperature Alarm	Check Housing Temp	*If ok* - Replace 700-1004
No Up Link 1.9 GHz Signal	Check Optical Path,	Trouble shoot Optical Path
	If ok - RF Signal test LNA, *if fail*	Replace LNA
	If ok - Test Duplexer , *if fail*	Replace Duplexer
	If ok - Test Polyphaser, *if fail*	Replace Polyphaser
Intrusion Alarm	Door Open	Close Door
	Defective Switch	Replace Switch
No Power	AC Fuse	Replace
AC Power Alarm	DC Fuse	Replace
	Disconnect DC Cable on AC Power Output, Measure with volt meter , Turn Off AC Power for 90 seconds, check again, *if BAD*	Replace Power Supply
Battery Back Up Alarm	Check Back up DC source or recharge, *if bad*	Replace battery and/or charger unit

CI Wireless Inc.
1211 Ira E. Woods Ave., Grapevine, TX 76051

10.2 Understanding Setup and Alarms Information

Hub

Optical Receive		(Composite Alarms Optical Transceivers 1 to 4)
Laser Alarm		
Communications Link	R1 R2 R3 R4	(RF Modem link failure)
TX Lzr Power		RF Input Power to Laser
TX Base Power		RF Input Power from Base Station
RF Up Link	R1 R2 R3 R4	(As defined in Signal Gain over Optical Path Loss)
Down Link Power Out	R1 R2 R3 R4	(Actual detected output power at remote as stated in dBm)
Down Link Power Set	R1 R2 R3 R4	(Last setting of output power made at remote)

Controls

Up Link Gain	R1 R2 R3 R4	(Sets Attenuator to desired RF Up Link Signal Gain)
Down Link Power dB	R1 R2 R3 R4	(Adjusts Output Power to specified Level in dBm)
*Remote Power	R1 R2 R3 R4	(Main or Back Up Power select)
Down Link Peak Power Set	R1 R2 R3 R4	Set Peak Power level for RF output power. Limits composite output power below this level. Default settings FCC licensed max levels

Maintenance Menu

Tx Pwr Lzr Mv		Detected RF Power in Mv
UL RF Los	R1 R2 R3 R4	(Up Link RF Path Loss in dB)
UL Optic	R1 R2 R3 R4	(Up Link Optical Path Loss in dB)
UL Rssi Mv	R1 R2 R3 R4	(RSSI Voltage Signal Level Reading)
DL dac Mv	R1 R2 R3 R4	(PA Gain Setting in millivolts)
UL Atten Set	R1 R2 R3 R4	(Up Link Attenuator Setting)
R . Temp C	R1 R2 R3 R4	(Remote Temperature of Cabinet ambient in degrees C.)
*DL RF Loss	R1 R2 R3 R4	(Down Link RF path Loss in dB)
*DL Optic	R1 R2 R3 R4	(Down Link Optical path Loss in dB)
*DL PA Detect	R1 R2 R3 R4	(Remote Unit Only, RF Output Power Level detected, millivolts)

** Not equipped in all units prior to manufacture dates of 8-1-98*

CI Wireless Inc.
1211 Ira E. Woods Ave., Grapevine, TX 76051

Remote Unit Alarms

Optical receive	
Laser Alarm	
Laser temperature Alarm	
PA Temperature Alarm	+75°C
RF Power Output Alarm	6 dB below RF output setting
Enclosure Temperature Alarm	0 to 70°C
Intrusion Alarm	Door
Primary Power	
Battery Back up	
Low TX Input Power	Input signal <15 dBm @ Laser Input
Output Power	Output power drop <10 dB
Temperature Alarm	<10 or > 160 degrees F, Cabinet Temperature

Information

Down Link Power Out	RF Output Power, dBm
TX Power In	Input Power to Laser In dBm
RF Up Link Detect	RF Up Link signal Gain
Up Link Gain Control	Last Up Link Gain Setting command at Hub
TX Power In	Power From Base Station, dBm
Cabinet Temperature	Degrees C

Control

Down Link Power dB	Set RF output power in dBm
Up Link Gain dB	Sets Up Link Signal Path Gain to desired level
* Remote Power	Main or BBU
Alarm History Log	Scholl last 100 alarms, displaying Date, Time Alarm Type
Alarm Reset Menu	Select remote to reset alarms (F4 resets all alarms all remotes)
RS 232 Port Mode	Activates RS 232 Port as Terminal Mode Modem Mode, None - Programming Mode

Additional R5 - R8 Remote Alarms, controls and information if system is equipped for dual band 800 MHz/1.9 GHz operation.

Additional Features for Future Product Releases

System Gain R1 - R4	Down Link Power Out (minus) Down Link RF Input = System Gain
System Gain Alarm	Alarm if System Gain drops 3 dB below setup level
Auto Loop Adjust Down Link	Resets Down System Gain to Setup level (Factory set to adjust one time daily at 3 A.M., # user defined to setup to 4 times/day)
Auto Loop Adjust Up Link	Resets Up Link System Gain to set up level (same as Down Link), (Factory set to adjust one time daily at 3 A.M., # user defined to setup to 4 times/day)
Auto Battery Back Up Test Cycle	Exercises Battery Back Up daily for 10 minutes

CI Wireless Inc.
1211 Ira E. Woods Ave., Grapevine, TX 76051

10.3 Module Replacement Procedures

Microcell (Remote) Unit

Power Amplifier Replacement

- ***Turn off and disconnect power*** from the Remote Unit
- Remove Duplexer/AC-DC Panel
  1. Disconnect AC Main Cable
  2. Disconnect AC Power Supply Cable
  3. Disconnect DC Interconnect Cable
  4. Disconnect TX RF Input Cable from Duplexer
  5. Disconnect RX Output Cable from Duplexer
  6. Disconnect Antenna/Duplexer Output RX cable
  7. Remove 4 screws which mounts the panel
  8. Panel will now lift out of unit
- Remove 6 screws securing Power Amplifier
- Disconnect PA Input RF cable from coupler on Fiber Optic/RF Modem panel
- Unplug PA ribbon cable from 700-1002
  Interconnect board assembly J5
- Lift PA out of Unit
- Remove PA Ribbon Cable, RF Input and Output cables and transfer to new PA
- Reinstall by reversing procedure
- Check PA Output Power Calibration
  Adjustment on 700-1004 Assembly on Controller door panel

Power Supply Replacement

- ***Turn off and disconnect power*** from the Remote Unit
- Remove Duplexer/AC-DC Panel
  1. Disconnect AC Main Cable
  2. Disconnect AC Power Supply Cable
  3. Disconnect DC Interconnect Cable
  4. Disconnect TX RF Input Cable from Duplexer
  5. Disconnect RX Output Cable from Duplexer
  6. Disconnect Antenna/Duplexer Output RX cable
  7. Remove 4 screws which mounts the panel
  8. Panel will now lift out of unit
- Disconnect 12 VDC Input cable from 700-1002 Interconnect assembly J2
- Remove 4 screws securing Power Supply Assembly
- Lift Power Supply ort of unit
- Remove Cable assemblies from defective unit and install on replacement power supply
- Reinstall by reversing procedure

LNA Replacement

- ***Turn Off and Disconnect Power*** from the Unit
- Remove Fiber Optic/RF Modem Panel
    1. Disconnect Fiber Optic cables and carefully place where they will not be damage
    2. Disconnect RF cables from couplers, 2 each.
    3. Remove 15 pin ribbon cable from J4 on 700-1003 Interconnect board assembly on panel
    4. Remove 4 Panel Mounting screws
    5. Panel will now lift out of unit
- Disconnect RF Cable from Duplexer, RX output
- Remove 4 mounting screws securing LNA Module
- Unplug DC Input from 700-1002 Interconnect assembly J7
- Lift LNA Module from Unit
- Remove Filter RF cables and reinstall replacement unit
- Reinstall LNA Module by reversing the procedure

Replacement of any Module on the Fiber Optic/RF Modem Panel

- ***Turn Off and Disconnect Power*** from the Unit
- Remove Fiber Optic/RF Modem Panel
    1. Disconnect Fiber Optic cables and carefully place where they will not be damage
    2. Disconnect RF cables from couplers, 2 each.
    3. Remove 15 pin ribbon cable from J4 on 700-1003 Interconnect board assembly on panel
    4. Remove 4 Panel Mounting screws
    5. Panel will now lift out of unit
- Remove and replace defective module on panel

Replacement of Duplexer or AC-DC Module

- ***Turn Off and Disconnect Power*** from the Unit
- Remove Fiber Optic/RF Modem Panel
    1. Disconnect Fiber Optic cables and carefully place where they will not be damage
    2. Disconnect RF cables from couplers, 2 each.
    3. Remove 15 pin ribbon cable from J4 on 700-1003 Interconnect board assembly on panel
    4. Remove 4 Panel Mounting screws
    5. Panel will now lift out of unit
- Duplexer - Remove 5 mounting screws from the back of panel and reinstall replacement assembly
- AC-DC Module
    1. Remove 4 screws securing cover

(con't on next page)

2. Remove 4 screws inside securing unit to panel
3. Reinstall replacement module. *Caution:* please secure with mounting screw when reinstalling module on panel
4. Reinstall panel reversing procedure

Replacement of Control Module or 700-1004 Board Assembly

- ***Turn Off and Disconnect Power*** from the Remote Unit
- Assemblies can be replaced without removing panel.
- Replacing the Controller
  1. Disconnect 26 conductor ribbon cables from J1 & J2 on 700-1004 board assembly
  2. Remove 4 mounting screws and lift controller from panel
  3. Reinstall by reversing procedure. *Caution:* Be sure ribbon cables are properly dressed to prevent damage when closing & opening door.
- Replacing 700-1004 Assembly
  1. Disconnect cables from J1, J2, J3 and J4
  2. Disconnect cables from terminal strips, RS-485, Door Intrusion switch and 10 Pin terminal
  3. Remove 4 mounting screws and lift module from panel
  4. Insure replacement board has proper Jumper placement and install reversing procedure
  5. Check PA Output for proper calibration adjustments are made using VR1 on board assembly

10.4 Block Diagrams with Levels

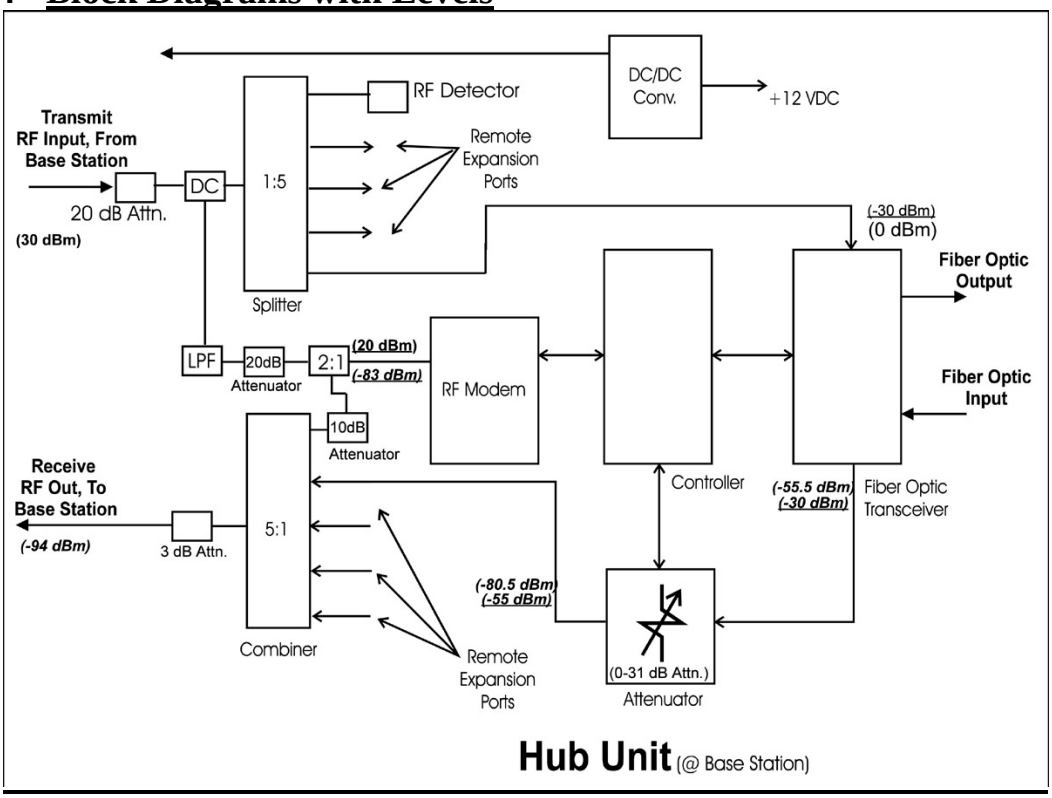

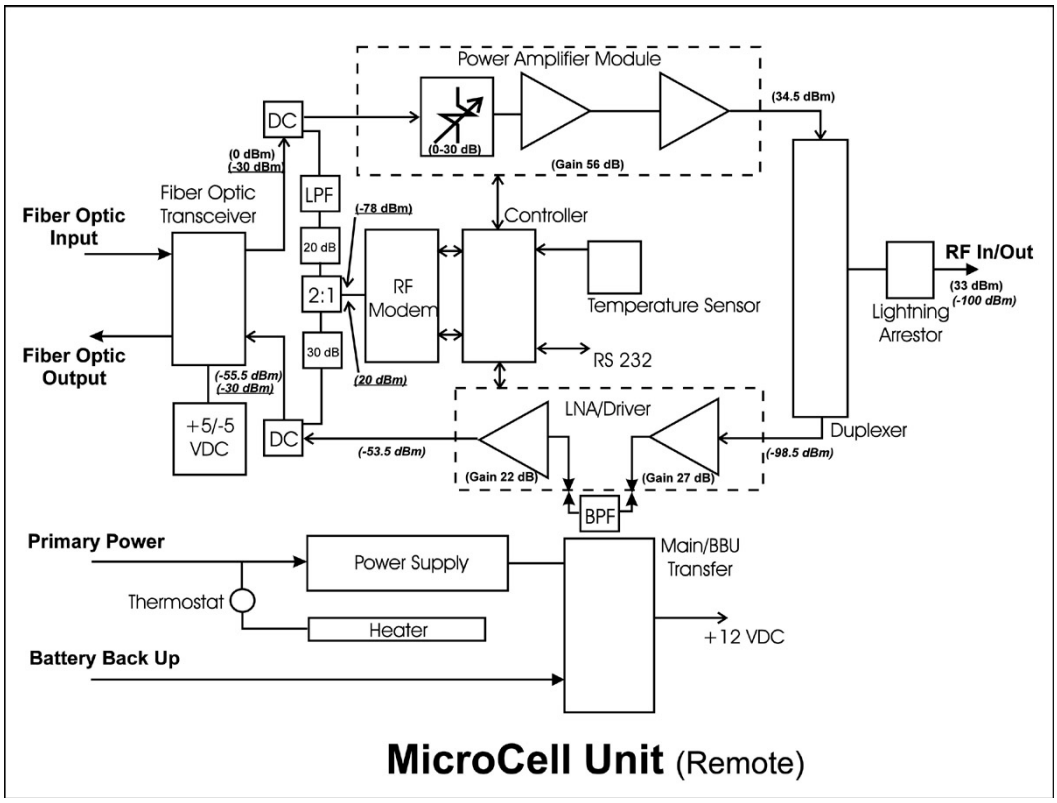

CI Wireless Inc.
1211 Ira E. Woods Ave., Grapevine, TX 76051

A4. EkoCel™, 800mHz Fiber Optic Microcell

Specifications: Model Eko-800

Parameter	Forward	Reverse
Operating Frequency, (MHz)	851-894 / 930-960	806-849 / 870-915
ESMR Frequency, (Band Selective) 1 dB Bandwith	851-866	806-821
Nominal 20 dB Bandwidth	35 MHz	35 MHz
Cellular Frequency, (Band Selective) 1 dB Bandwidth	869-894	824-849
Nominal 20 dB Bandwidth	35 MHz	35 MHz
Number of Channels	20	20
RF Input Power, (dBm)	30	-60 to –115
Interference signal, no desense, (dBm)		-25
RF Input Maximum, No Damage (dBm)	40	10
RF Output Power, Composite, (dBm)	36	
RF Rated power composite	FCC: 4 watt	IC: 5 watt
RF Link gain, Max (dB)	15	7
Gain Adjustment, 1 dB Steps, (dB)	30	30
Noise Figure, Maximum any Gain, (dB)		6
C/N, over gain range, (dB)	>50	
Gain Flatness, Maximum, (dB)	+/- 1	+/- 1
Propagation delay, excluding fiber, (usec)	<5	<5
Optical Wavelength, (nm) (+/- 30 nm)	1550	1310
Optical Path Loss Maximum,, (dB)	10	10
Spurious Output @ rated output power (dBm)	<-13	
Impedance, input and output, (ohms)	50	
Return loss, input and output, (dB)	15	
RF Connector, Antenna Port/Duplexed	N/Female	
Optical Connectors	FC/Angled PC	
Fiber Type	Single Mode 9/125 um	
	Microcell	Hub Unit
Primary Power	90-130 VAC	18-36 VDC
Current Draw (AMPS)	3	1.5
Optional, Battery Backup	28 VDC	N/A
Optional, AC Supply	N/A	90-130 VAC
Ambient operating temperature, (Degrees C.)	-30 to +50	-30 to +50
Optional, with Heater	-40 to +50	N/A
Enclosure	NEMA 3R , 12	Rack Mount
Enclosure Dimensions (HxWxD), inches	24x12x14	7x19x15
Weight	57 lbs.	12 lbs.
Color	Gray	
Cooling	Heat Exchanger / Forced Air	
MTBF	60,000 Hrs.	
Optional, Single optical fiber operation	Wave Division Multiplexing (WDM)	

N.B. The Manufacturer reserves the right to alter the specifications.

OUTLINE DRAWING

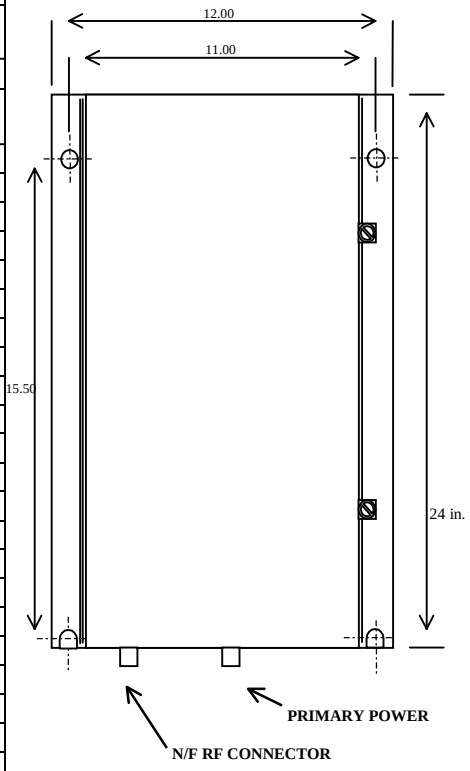

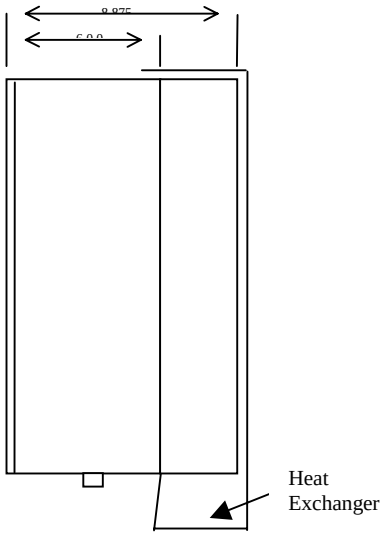

B. Model Number Identification

800 Hub **Example:** Eko-8HEB0-0AC000

Eko-8H X X X - X X X X X X

Option Designators (Include only equipped options)

Combiner **0 2 4**
Wave Division Multiplex Option
Heater Option (N/A for Hub)
Crossband Coupler Option(1.9 and 800)
AC Power Option (**D**C Standard)
Duplexer Option

Standard Nomenclature

Reserved
B-Both
C- Cellular
S - Trunking/Cellular
Expansion Configured Hub Unit
H - Hub Unit Only, Non-Expandable

Microcell (Remote) **Examples:** Eko-8M0C0-DAC000
Eko-8M0S0-DAC000

Eko-8M X X X - X X X X X X

Option Designators (Include only equipped options)

Combiner **0 2 4 (N/A)**
Wave Division Multiplex
Heater Option
Crossband Coupler Option
AC Power - Standard
Duplexer - Standard

Standard Nomenclature

Reserved

C - Cellular
S - Trunking/ESMR
Expansion or Slave Unit*
M - Microcell (Remote) Unit Only Non-Expandable ***Slave unit is equipped to interconnect with Eko-1.9M which includes Eko-M-X option

E. PCS FREQUENCY BANDS

FREQUENCY BLOCKS

Block Designator	Reverse Frequency	Forward Frequency
A	1850 - 1865 MHz	1930 - 1945 MHz
B	1870 - 1885 MHz	1950 - 1965 MHz
C	1895 - 1910 MHz	1975 - 1990 MHz
D	1865 - 1870 MHz	1945 - 1950 MHz
E	1885 - 1890 MHz	1965 - 1970 MHz
F	1890 - 1895 MHz	1970 - 1975 MHz

F. CHANNEL PLANS

F1. CDMA CHANNEL PLAN

	CDMA Channel Number	Center Frequency of CDMA Channel in MHz
Reverse Channels	$0 \leq N \leq 1199$	1850.000 +0.050 N
Forward Channels	$0 \leq N \leq 1199$	1930.000 +0.050 N

CDMA PREFERRED SET CHANNEL NUMBERS -A BAND

CHANNEL	FORWARD (MHz)	REVERSE (MHz)
25	1931.25	1851.25
50	1932.50	1852.50
75	1933.75	1853.75
100	1935.00	1855.00
125	1936.25	1856.25
150	1937.50	1857.50
175	1938.75	1858.75
200	1940.00	1860.00
225	1941.25	1861.25
250	1942.50	1862.50
275	1943.75	1863.75

CDMA PREFERRED SET CHANNEL NUMBERS - B BAND

CHANNEL	FORWARD (MHz)	REVERSE (MHz)
425	1951.25	1871.25
450	1952.50	1872.50
475	1953.75	1873.75
500	1955.00	1875.00
525	1956.25	1876.25
550	1957.50	1877.50
575	1958.75	1878.75
600	1960.00	1880.00
625	1961.25	1881.25
650	1962.50	1882.50
675	1963.75	1883.75

CDMA PREFERRED SET CHANNEL NUMBERS - C BAND

CHANNEL	FORWARD (MHz)	REVERSE (MHz)
925	1976.25	1896.25
950	1977.50	1897.50
975	1978.75	1898.75
1000	1980.00	1900.00
1025	1981.25	1901.25
1050	1982.50	1902.50
1075	1983.75	1903.75
1100	1985.00	1905.00
1125	1986.25	1906.25
1150	1987.50	1907.50
1175	1988.75	1908.75

CDMA PREFERRED SET CHANNEL NUMBERS - D BAND

CHANNEL	FORWARD (MHz)	REVERSE (MHz)
325	1946.25	1866.25
350	1947.50	1867.50
375	1948.75	1867.75

CDMA PREFERRED SET CHANNEL NUMBERS - E BAND

CHANNEL	FORWARD (MHz)	REVERSE (MHz)
725	1966.25	1886.25
750	1967.50	1887.50
775	1968.75	1887.75

CDMA PREFERRED SET CHANNEL NUMBERS - F BAND

CHANNEL	FORWARD (MHz)	REVERSE (MHz)
825	1971.25	1891.25
850	1972.50	1892.50
875	1973.75	1893.75

F3. CHANNEL PLAN FOR GSM

PREFERRED SET CHANNEL NUMBERS - A BAND

CHANNEL	FORWARD (MHz)	REVERSE (MHz)
512	1930.2	1850.2
513	1930.4	1850.4
514	1930.6	1850.6
515	1930.8	1850.8
516	1931.0	1851.0
517	1931.2	1851.2
518	1931.4	1851.4
519	1931.6	1851.6
520	1931.8	1851.8
521	1932.0	1852.0
522	1932.2	1852.2
523	1932.4	1852.4
524	1932.6	1852.6
525	1932.8	1852.8
526	1933.0	1853.0
527	1933.2	1853.2
528	1933.4	1853.4
529	1933.6	1853.6
530	1933.8	1853.8
531	1934.0	1854.0
532	1934.2	1854.2
533	1934.4	1854.4
534	1934.6	1854.6
535	1934.8	1854.8
536	1935.0	1855.0
537	1935.2	1855.2
538	1935.4	1855.4
539	1935.6	1855.6
540	1935.8	1855.8
541	1936.0	1856.0
542	1936.2	1856.2
543	1936.4	1856.4
544	1936.6	1856.6
545	1936.8	1856.8
546	1936.0	1857.0
547	1937.2	1857.2
548	1937.4	1857.4
549	1937.6	1857.6
550	1937.8	1857.8
551	1938.0	1858.0
552	1938.2	1858.2
553	1938.4	1858.4
554	1938.6	1858.6
555	1938.8	1858.8
556	1939.0	1859.0
557	1939.2	1859.2
558	1939.4	1859.4
559	1939.6	1859.6

GSM PREFERRED SET CHANNEL NUMBERS - A BAND (CON'T)

CH ANNEL	FORWARD (MHz)	REVERSE (MHz)
560	1939.8	1859.8
561	1940.0	1860.0
562	1940.2	1860.2
563	1940.4	1860.4
564	1940.6	1860.6
565	1940.8	1860.8
566	1941.0	1861.0
567	1941.2	1861.2
568	1941.4	1861.4
569	1941.6	1861.6
570	1941.8	1861.8
571	1942.0	1862.0
572	1942.2	1862.2
573	1942.4	1862.4
574	1942.6	1862.6
575	1942.8	1862.8
576	1943.0	1863.0
577	1943.2	1863.2
578	1943.4	1863.4
579	1943.6	1863.6
580	1943.8	1863.8
581	1944.0	1864.0
582	1944.2	1864.2
583	1944.4	1864.4
584	1944.6	1864.6
585	1944.8	1864.8

GSM PREFERRED SET CHANNEL NUMBERS - B BAND

CHANNEL	FORWARD (MHz)	REVERSE (MHz)
611	1950.0	1870.0
612	1950.2	1870.2
613	1950.4	1870.4
614	1950.6	1870.6
615	1950.8	1870.8
616	1951.0	1871.0
617	1951.2	1871.2
618	1951.4	1871.4
619	1951.6	1871.6
620	1951.8	1871.8
621	1952.0	1872.0
622	1952.2	1872.2
623	1952.4	1872.4
624	1952.6	1872.6
625	1952.8	1872.8
626	1953.0	1873.0
627	1953.2	1873.2
628	1953.4	1873.4
629	1953.6	1873.6

GSM PREFERRED SET CHANNEL NUMBERS - B BAND (CON'T)

CHANNEL	FORWARD (MHz)	REVERSE (MHz)
630	1953.8	1873.8
631	1954.0	1874.0
632	1954.2	1874.2
633	1954.4	1874.4
634	1954.6	1874.6
635	1954.8	1874.8
636	1955.0	1875.0
637	1955.2	1875.2
638	1955.4	1875.4
639	1955.6	1875.6
640	1955.8	1875.8
641	1956.0	1876.0
642	1956.2	1876.2
643	1956.4	1876.4
644	1956.6	1876.6
645	1956.8	1876.8
646	1957.0	1877.0
647	1957.2	1877.2
648	1957.4	1877.4
649	1957.6	1877.6
650	1957.8	1877.8
651	1958.0	1878.0
652	1958.2	1878.2
653	1958.4	1878.4
654	1958.6	1878.6
655	1958.8	1878.8
656	1959.0	1879.0
657	1959.2	1879.2
658	1959.4	1879.4
659	1959.6	1879.6
660	1959.8	1879.8
661	1960.0	1880.0
662	1960.2	1880.2
663	1960.4	1880.4
664	1960.6	1880.6
665	1960.8	1880.8
666	1961.0	1881.0
667	1961.2	1881.2
668	1961.4	1881.4
669	1961.6	1881.6
670	1961.8	1881.8
671	1962.0	1882.0
672	1962.2	1882.2
673	1962.4	1882.4
674	1962.6	1882.6
675	1962.8	1882.8
676	1963.0	1883.0
677	1963.2	1883.2
678	1963.4	1883.4
679	1963.6	1883.6
680	1963.8	1883.8

GSM PREFERRED SET CHANNEL NUMBERS - B BAND (CON'T)

CHANNEL	FORWARD (MHz)	REVERSE (MHz)
681	1964.0	1884.0
682	1964.2	1884.2
683	1964.4	1884.4
684	1964.6	1884.6
685	1964.8	1884.8

GSM PREFERRED SET CHANNEL NUMBERS - C BAND

CHANNEL	FORWARD (MHz)	REVERSE (MHz)
736	1975.0	1895.0
737	1975.2	1895.2
738	1975.4	1895.4
739	1975.6	1895.6
740	1975.8	1895.8
741	1976.0	1896.0
742	1976.2	1896.2
743	1976.4	1896.4
744	1976.6	1896.6
745	1976.8	1896.8
746	1977.0	1897.0
747	1977.2	1897.2
748	1977.4	1897.4
749	1977.6	1897.6
750	1977.8	1897.8
751	1978.0	1898.0
752	1978.2	1898.2
753	1978.4	1898.4
754	1978.6	1898.6
755	1978.8	1898.8
756	1979.0	1899.0
757	1979.2	1899.2
758	1979.4	1899.4
759	1979.6	1899.6
760	1979.8	1899.8
761	1980.0	1900.0
762	1980.2	1900.2
763	1980.4	1900.4
764	1980.6	1900.6
765	1980.8	1900.8
766	1981.0	1901.0
767	1981.2	1901.2
768	1981.4	1901.4
769	1981.6	1901.6
770	1981.8	1901.8
771	1982.0	1902.0
772	1982.2	1902.2
773	1982.4	1902.4
774	1982.6	1902.6
775	1982.8	1902.8
776	1983.0	1903.0

GSM PREFERRED SET CHANNEL NUMBERS - C BAND (CON'T)

CHANNEL	FORWARD (MHz)	REVERSE (MHz)
777	1983.2	1903.2
778	1983.4	1903.4
779	1983.6	1903.6
780	1983.8	1903.8
781	1984.0	1904.0
782	1984.2	1904.2
783	1984.4	1904.4
784	1984.6	1904.6
785	1984.8	1904.8
786	1985.0	1905.0
787	1985.2	1905.2
788	1985.4	1905.4
789	1985.6	1905.6
790	1985.8	1905.8
791	1986.0	1906.0
792	1986.2	1906.2
793	1986.4	1906.4
794	1986.6	1906.6
795	1986.8	1906.8
796	1987.0	1907.0
797	1987.2	1907.2
798	1987.4	1907.4
799	1987.6	1907.6
800	1987.8	1907.8
801	1988.0	1908.0
802	1988.2	1908.2
803	1988.4	1908.4
804	1988.6	1908.6
805	1988.8	1908.8
806	1989.0	1909.0
807	1989.2	1909.2
808	1989.4	1909.4
809	1989.6	1909.6
810	1989.8	1909.8

GSM PREFERRED SET CHANNEL NUMBERS - D BAND

CHANNEL	FORWARD (MHz)	REVERSE (MHz)
586	1945.0	1865.0
587	1945.2	1865.2
588	1945.4	1865.4
589	1945.6	1865.6
590	1945.8	1865.8
591	1946.0	1866.0
592	1946.2	1866.2
593	1946.4	1866.4
594	1946.6	1866.6
595	1946.8	1866.8
596	1947.0	1867.0
597	1947.2	1867.2
598	1947.4	1867.4
599	1947.6	1867.6
600	1947.8	1867.8
601	1948.0	1868.0
602	1948.2	1868.2
603	1948.4	1868.4
604	1948.6	1868.6
605	1948.8	1868.8
606	1949.0	1869.0
607	1949.2	1869.2
608	1949.4	1869.4
609	1949.6	1869.6
610	1949.8	1869.8

GSM PREFERRED SET CHANNEL NUMBERS - E BAND

CHANNEL	FORWARD (MHz)	REVERSE (MHz)
686	1965.0	1885.0
687	1965.2	1885.2
688	1965.4	1885.4
689	1965.6	1885.6
690	1965.8	1885.8
691	1966.0	1886.0
692	1966.2	1886.2
693	1966.4	1886.4
694	1966.6	1886.6
695	1966.8	1886.8
696	1967.0	1887.0
697	1967.2	1887.2
698	1967.4	1887.4
699	1967.6	1887.6
700	1967.8	1887.8
701	1968.0	1888.0
702	1968.2	1888.2
703	1968.4	1888.4
704	1986.6	1888.6
705	1968.8	1888.8

CI Wireless Inc.
1211 Ira E. Woods Ave., Grapevine, TX 76051

GSM PREFERRED SET CHANNEL NUMBERS - E BAND (CON'T)

CHANNEL	FORWARD (MHz)	REVERSE (MHz)
706	1969.0	1889.0
707	1969.2	1889.2
708	1969.4	1889.4
709	1969.6	1889.6
710	1969.8	1889.8

GSM PREFERRED SET CHANNEL NUMBERS - F BAND

CHANNEL	FORWARD (MHz)	REVERSE (MHz)
711	1970.0	1890.0
712	1970.2	1890.2
713	1970.4	1890.4
714	1970.6	1890.6
715	1970.8	1890.8
716	1971.0	1891.0
717	1971.2	1891.2
718	1971.4	1891.4
719	1971.6	1891.6
720	1971.8	1891.8
721	1972.0	1892.0
722	1972.2	1892.2
723	1972.4	1892.4
724	1972.6	1892.6
725	1972.8	1892.8
726	1973.0	1893.0
727	1973.2	1893.2
728	1973.4	1893.4
729	1973.6	1893.6
730	1973.8	1893.8
731	1974.0	1894.0
732	1974.2	1894.2
733	1974.4	1894.4
734	1974.6	1894.6
735	1974.8	1894.8

CI Wireless Inc.

PRODUCT WARRANTY

CI Wireless Inc. warrants that, at the time of shipment, the products furnished by CI Wireless are free from defects in material and workmanship. CI Wireless's obligation under this warranty is limited to replacement or repair of such products within one year from the date of shipment.

The defective product has to be returned by the first user to the CI Wireless factory, freight prepaid. No products will be accepted for replacement or repair without prior written approval. Replacement or repair (CI Wireless Option) will be made only after an examination at CI Wireless's Grapevine Texas plant show defective material or workmanship at the time of manufacture. This warranty is the only warranty made by CI Wireless and is given expressly and in place of all other express or implied warranties of merchantability and fitness for particular purpose. CI Wireless is not liable for any other direct, incidental or consequential damages, including, without limitation, installation costs, inconvenience, rental of replacement, equipment, loss of profits or other costs of any nature as a result of the use of the products manufactured by CI Wireless, whether used in accordance with instructions or not.