InterAir Wireless – FCC response.

1. SAR question:

-InterAir Proprietary –

The InterAir ISP Direct Model 2401 is used to transmit LAN traffic from one location to another. The distance between locations can be up to 25 miles. The product consists of an indoor unit (IDU), outdoor unit (ODU), coaxial cable assembly, and external brick power supply. The interface to the system is TCP/IP running over 10BaseT ethernet. These components are professionally installed by InterAir Wireless certified technicians at each user's location.

The IDU and power supply are installed indoors. The IDU contains the system processor, 10BaseT ethernet interface, and radio. The ODU is installed outdoors (typically on the roof) and contains the radio power amplifier/preamplifier and the antenna. The ODU is supplied to the installer with the antenna permanently attached to the box containing the amplifier electronics.

The IDU and ODU connect together using a single 50 ohm coaxial cable. The cable is available in eight standard lengths (from 40 to 400 feet) and is supplied to the installer as a completed assembly. This cable is used to transmit all RF, DC power, and control signals between the IDU and ODU. An InterAir Wireless Proprietary electrical interface is used to transmit these signals between the two units.

The requirements of CFAR 47 Part 15.203 are met by having the antenna permanently attached to the unit. In addition, the unit is professionally installed by certified technicians. The IDU contains an interlock which prohibits it from transmitting unless a properly functioning ODU is connected using one of the eight standard coaxial cable assemblies. The ODU also contains circuitry which assures that the transmit power limit is not exceeded. IDU and ODU fault indicators are located on the front panel of the IDU and are illuminated when the interlock is activated.

The ODU/antenna assembly is typically mounted on the roof away from people. Therefore, it is not necessary to perform the SAR or RF Safety Requirement tests.

- InterAir Proprietary –

2.

The measured maximum RF output power of 190 mW or 22.8 dBm is the actual power delivered to the transmitting antenna with the minimum 10.1 dB loss cable between the indoor and outdoor units. Please note that the transmitter will not function if the indoor unit is not connected to the outdoor unit. There is no correction necessary to FCC form 731.

Please also note that selection of cable and antenna are determined by InterAir Wireless so that the total peak radiated power shall not exceed 36 dBm. For example: if the Conifer 18T-2400 reflector antenna is used the cable length is selected so that it has

minimum cable loss of 36 dBm (max EIRP allowed) – [22.8 dBm + 10.1 dBi] (power delivered from indoor unit) – 17 dBi (antenna gain)= 13.9 dB.

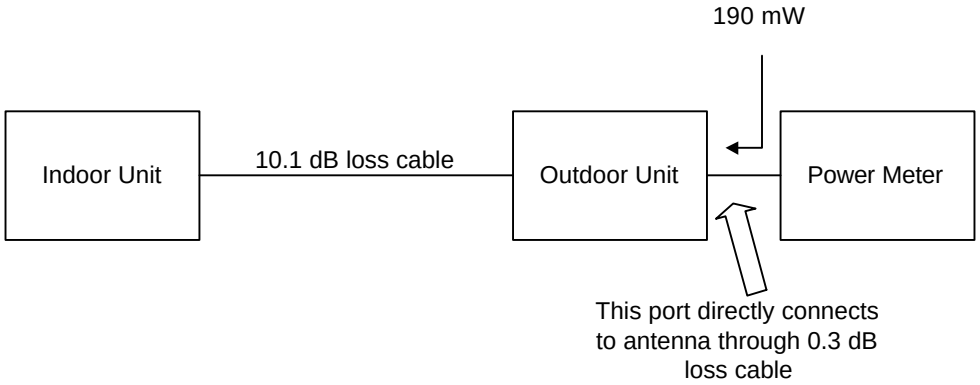

We, InterAir Wireless, confirm that the cables listed on page 7 of the test report are the only cables that will be supplied.

3. Process Gain tests:

See Attached Discussion

InterAir Wireless
485 Cayuga Rd, PO Box 222
Buffalo, NY 14225-0222
Contact: David Chauncey, Director of RF Engineering
Voice 716-631-6409
Fax 716-631-7849
E-Mail dchauncey@interairwireless.com

Product: ISP Direct Indoor and Outdoor Units
Model: 2401-01 (indoor) and 2401-02 (outdoor)
FCC ID: NUX-ISP2401
Reference: EA89226

CFR 47 Part 15.247 calls for a process gain of at least 10 dB for a direct sequence system. This is measured using the jamming margin method where a CW jammer is injected and the jamming margin is measured. This is done in 50 kHz increments across the passband of the system. The worst 20% of the data points are discarded. System Losses of 2 dB are assumed.

The system losses of the unit were measured and found to be in excess of 2 dB. This made the system fail the process gain requirement when previous measurements were taken. A change was made in the receiver DSP software to reduce the system losses. The unit was found to pass when measured using this new software.

A summary of the measurement follows:

Measured Process Gain $G_p = (S/N)_o + L_{sys} + M_j$

$(S/N)_o = 10.8$ dB for BER of 10^{-4}, See Appendix 1
$L_{sys} = 2$ dB
System Passband = +/- 8.5 MHz for Wideband Mode (6 dB IF Bandwidth)
= +/- 4.5 MHz for Narrowband Mode (6 dB IF Bandwidth),
See Appendix 2

$G_p = 10.8$ dB + 2 dB + M_j Must be at least 10 dB

Insert Test Data Here

1. Processing Gain of A Direct Sequence Spread Spectrum, FCC CFR 47, Para. 15.247(e)

PRODUCT NAME: **ISP DIRECT INDOOR & OUTDOOR UNITS, Model No.: 2401-01 (indoor) and 2401-02 (outdoor)**

FCC REQUIREMENTS:

The processing gain of a direct sequence system shall be at least 10 dB. The processing gain shall be determined from the ratio in dB of the signal-to-noise ratio with the system spreading code turned off to the signal-to-noise ratio with the system spreading code turned on, as measured at the demodulated output of the receiver.

CLIMATE CONDITION:

Standard Temperature and Humidity:

- Ambient temperature: 23 ^{o}C
- Relative humidity: 43 %

POWER INPUT:

AC 120 V 60Hz from Elpac external switching power supply, model WRI4232.

TEST EQUIPMENT:

- Advantest Spectrum Analyzer, Model R3271, S/N: 15050203
- Bird 20 dB Attenuator, 50 Ohm IN/OUT
- IBM PS/1 & IBM 350 ThinkPad Host Computer(s)
- Fluke RF Signal Generator, Model 6061A, Freq. range: 10 KHz - 1050 MHz.
- HP 8900 RF Peak Power Meter, Measuring Frequency Range: 100 MHz - 18 GHz.

METHOD OF MEASUREMENT:

METHOD #1:- Jamming Margin Method

The processing gain may be measured using the CW jamming margin method. Figure 1 shows the test configuration. The test consists of stepping a signal generator in 50 KHz increments across the passband of the system. At each point, the generator level required to produce the recommended Bit Error Rate (BER) is recorded. This level is jammer level. The output power of the transmitting unit is measured at the same point. The Jammer to Signal (J/S) ratio is then calculated. Discard the worst 20% of the J/S data points. The lowest remaining J/S ratio is used when calculating the Process Gain.

The signal to noise ratio for an ideal non-coherent receiver is calculated from:

$$Pe = 1/2e^{(-1/2(S/N)o)} \quad (1)$$

where: Pe = probability of error (BER)
(S/N)o = the required signal to noise ratio at the receiver output for a given received signal quality

Ref.: Viterbi, A.J. Principles of Coherent Communications (New York: McGraw-HILL 1966), Pg. 207

Using equation (1) shown above, calculate the signal to noise ratio required for your chosen BER. This value and the measured J/S ratio are used in the following equation to calculate the Process Gain (Gp) of the system.

$$\mathbf{Gp = (S/N)o+Mj+Lsys}$$

Where:

(S/N)o: Theoretical signal to noise ratio required to maintain the normal operation just before the BERappears. In real measurements the maximum error of 0.001 is allowed in an ideal system using their modulation scheme with all codes turned off (i.e. no spreading or processing gain).

Mj: Maximum jammer to Signal Ratio that recorded at the detected BER.

Lsys: System losses such as non-ideal synchronization, tracking circuitry, non-optimal baseband receiver filtering and etc... These losses can be in excess of 2 dB for each transmitter and receiver pair. For the purpose of this processing gain calculation we assume a Lsys at its minimum value of 2 dB.

Ref.: Dixon, R, Spread Spectrum Systems. (New York: Wiley, 1984)

The Signal-to-Noise Ratio (S/N) with respect to the probability of bit error for a differentially QPSK (DQPSK) receiver in the presence of additive white Gaussian noise (AWGN) is given by Figure 4.5.1 as attached.

Ref.: Marvin Simon, Spread Spectrum Communication Handbook, page 695.

Since the CW jamming is a tone jamming, the (S/N)o for a AWGN jamming obtained from Figure 4.5.1 can be converted to the CW jamming or tone jamming using the formula (3.97) of the Marvin Simon Spread Spectrum Communication Handbook as follows:

$(S/N)_o^t$ in dB = $(S/N)_o^{AWGN}$ / 0.8

TEST RESULTS: Conforms.

TEST PERSONNEL: Mr. Tri M. Luu, P.Eng.

DATE: July 23 & 24, 1998

Figure 1:- SETUP FOR PROCESSING GAIN MEASUREMENT - JAMMING MARGIN METHOD

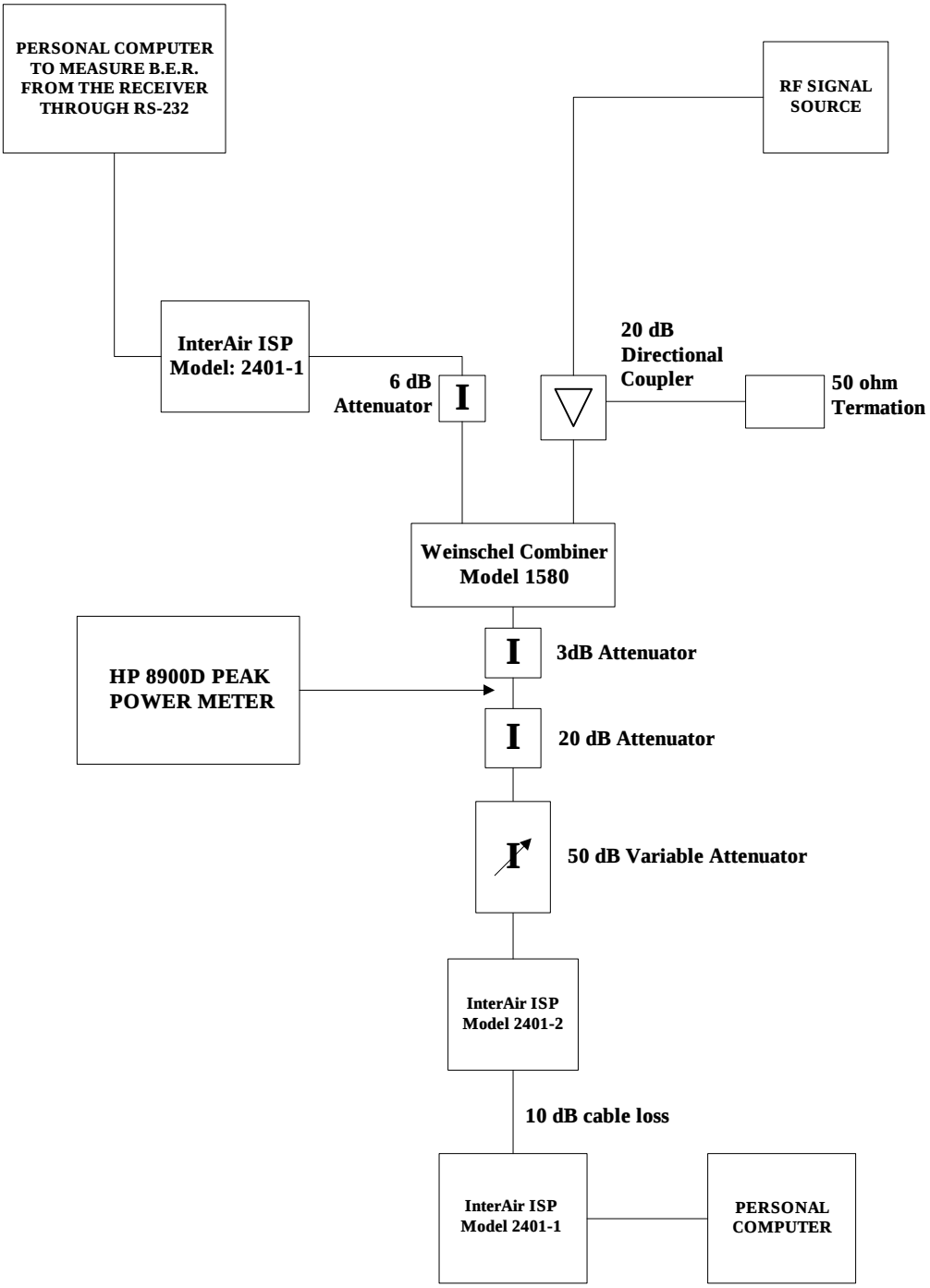

MEASUREMENT DATA:

Channel #4, Fc = 2411.4375 MHz	**Data Rate = 1.023 Mbps (DQPSK), Medium**
Chip Rate = 5.625 MHz	**PN Code Length = 11 chips/symbol**
6 dB BW = 5 MHz	

(S/N)o = 12 dB dB per attached Figure 4.5.1
Measured Processing Gain Gp = (S/N)o + Lsys + Mj = 12 + 2 + Mj = 14 + Mj (dB)
Theoretical Calculated Processing Gain = Chip Rate/Data rate = 5.625 MHz / (1.023 Mb/s)/(2 bits/symbol) = 11.0 or 10.4 dB

Note:
- Total Peak Power from the EUT's Tx measured at the EUT's Rx Input: P_t = -72 dBm
- Jamming signal level at measured at the EUT's receiver input: J
- Mj = J-P_t
- The following shaded boxes are discarded worst measurements (18.2% of total measurement points)

SUMMARY OF TEST RESULTS	
Theoretical Process Gain	**10.4 dB**
Minimum Measured Process Gain with discard of 18.2% of the worst measurements	**12.2 dB**

Test Point	Jammer Signal Freq. +/- Fc (MHz)	Jammer Signal Freq. +/- Fc (MHz)	(BER) (DQPSK) x10-5	(S/N)o (dB)	System Loss Lsys (dB)	Jammer to Signal Ratio Mj (dB)	Measured Processing Gain (dB)	Discarded Readings
1	2406.93750	-4.50	1.0	12.0	2.0	4.7	18.7	
2	2406.98750	-4.45	1.0	12.0	2.0	4.7	18.7	
3	2407.03750	-4.40	1.0	12.0	2.0	4.4	18.4	
4	2407.08750	-4.35	1.0	12.0	2.0	4.4	18.4	
5	2407.13750	-4.30	1.0	12.0	2.0	4.2	18.2	
6	2407.18750	-4.25	1.0	12.0	2.0	4.0	18.0	
7	2407.23750	-4.20	1.0	12.0	2.0	3.7	17.7	
8	2407.28750	-4.15	1.0	12.0	2.0	3.9	17.9	
9	2407.33750	-4.10	1.0	12.0	2.0	3.5	17.5	
10	2407.38750	-4.05	1.0	12.0	2.0	3.4	17.4	
11	2407.43750	-4.00	1.0	12.0	2.0	3.4	17.4	
12	2407.48750	-3.95	1.0	12.0	2.0	3.1	17.1	
13	2407.53750	-3.90	1.0	12.0	2.0	3.1	17.1	
14	2407.58750	-3.85	1.0	12.0	2.0	3.1	17.1	
15	2407.63750	-3.80	1.0	12.0	2.0	2.9	16.9	
16	2407.68750	-3.75	1.0	12.0	2.0	2.8	16.8	
17	2407.73750	-3.70	1.0	12.0	2.0	2.7	16.7	
18	2407.78750	-3.65	1.0	12.0	2.0	2.5	16.5	
19	2407.83750	-3.60	1.0	12.0	2.0	2.6	16.6	
20	2407.88750	-3.55	1.0	12.0	2.0	2.5	16.5	
21	2407.93750	-3.50	1.0	12.0	2.0	2.2	16.2	

Test Point	Jammer Signal Freq. +/- Fc (MHz)	Jammer Signal Freq. +/- Fc (MHz)	(BER) (DQPSK) x10-5	(S/N)o (dB)	System Loss Lsys (dB)	Jammer to Signal Ratio Mj (dB)	Measured Processing Gain (dB)	Discarded Readings
22	2407.98750	-3.45	1.0	12.0	2.0	2.2	16.2	
23	2408.03750	-3.40	1.0	12.0	2.0	2.2	16.2	
24	2408.08750	-3.35	1.0	12.0	2.0	2.0	16.0	
25	2408.13750	-3.30	1.0	12.0	2.0	2.0	16.0	
26	2408.18750	-3.25	1.0	12.0	2.0	1.8	15.8	
27	2408.23750	-3.20	1.0	12.0	2.0	1.7	15.7	
28	2408.28750	-3.15	1.0	12.0	2.0	1.7	15.7	
29	2408.33750	-3.10	1.0	12.0	2.0	1.7	15.7	
30	2408.38750	-3.05	1.0	12.0	2.0	1.7	15.7	
31	2408.43750	-3.00	1.0	12.0	2.0	1.6	15.6	
32	2408.48750	-2.95	1.0	12.0	2.0	1.6	15.6	
33	2408.53750	-2.90	1.0	12.0	2.0	1.6	15.6	
34	2408.58750	-2.85	1.0	12.0	2.0	1.4	15.4	
35	2408.63750	-2.80	1.0	12.0	2.0	1.2	15.2	
36	2408.68750	-2.75	1.0	12.0	2.0	1.1	15.1	
37	2408.73750	-2.70	1.0	12.0	2.0	1.2	15.2	
38	2408.78750	-2.65	1.0	12.0	2.0	1.2	15.2	
39	2408.83750	-2.60	1.0	12.0	2.0	1.1	15.1	
40	2408.88750	-2.55	1.0	12.0	2.0	1.0	15.0	
41	2408.93750	-2.50	1.0	12.0	2.0	1.0	15.0	
42	2408.98750	-2.45	1.0	12.0	2.0	0.9	14.9	
43	2409.03750	-2.40	1.0	12.0	2.0	0.9	14.9	
44	2409.08750	-2.35	1.0	12.0	2.0	0.8	14.8	
45	2409.13750	-2.30	1.0	12.0	2.0	0.1	14.1	
46	2409.18750	-2.25	1.0	12.0	2.0	0.0	14.0	
47	2409.23750	-2.20	1.0	12.0	2.0	-0.1	13.9	
48	2409.28750	-2.15	1.0	12.0	2.0	-0.5	13.5	
49	2409.33750	-2.10	1.0	12.0	2.0	-1.0	13.0	
50	2409.38750	-2.05	1.0	12.0	2.0	-1.6	12.4	
51	2409.43750	-2.00	1.0	12.0	2.0	-1.7	12.3	
52	2409.48750	-1.95	1.0	12.0	2.0	-1.7	12.3	
53	**2409.53750**	**-1.90**	**1.0**	**12.0**	**2.0**	**-1.8**	**12.2**	
54	2409.58750	-1.85	1.0	12.0	2.0	-1.5	12.5	
55	2409.63750	-1.80	1.0	12.0	2.0	-0.9	13.1	
56	2409.68750	-1.75	1.0	12.0	2.0	-0.5	13.5	
57	2409.73750	-1.70	1.0	12.0	2.0	-0.4	13.6	
58	2409.78750	-1.65	1.0	12.0	2.0	-0.6	13.4	
59	2409.83750	-1.60	1.0	12.0	2.0	-1.1	12.9	
60	2409.88750	-1.55	1.0	12.0	2.0	-2.0	12.0	20
61	2409.93750	-1.50	1.0	12.0	2.0	-2.3	11.7	10
62	2409.98750	-1.45	1.0	12.0	2.0	-2.3	11.7	11

Test Point	Jammer Signal Freq. +/- Fc (MHz)	Jammer Signal Freq. +/- Fc (MHz)	(BER) (DQPSK) x10-5	(S/N)o (dB)	System Loss Lsys (dB)	Jammer to Signal Ratio Mj (dB)	Measured Processing Gain (dB)	Discarded Readings
63	2410.03750	-1.40	1.0	12.0	2.0	-2.0	12.0	21
64	**2410.08750**	**-1.35**	**1.0**	**12.0**	**2.0**	**-1.8**	**12.2**	
65	2410.13750	-1.30	1.0	12.0	2.0	-1.4	12.6	
66	2410.18750	-1.25	1.0	12.0	2.0	-1.4	12.6	
67	2410.23750	-1.20	1.0	12.0	2.0	-0.8	13.2	
68	2410.28750	-1.15	1.0	12.0	2.0	-0.8	13.2	
69	2410.33750	-1.10	1.0	12.0	2.0	-1.0	13.0	
70	2410.38750	-1.05	1.0	12.0	2.0	-1.4	12.6	
71	**2410.43750**	**-1.00**	**1.0**	**12.0**	**2.0**	**-1.8**	**12.2**	
72	**2410.48750**	**-0.95**	**1.0**	**12.0**	**2.0**	**-1.8**	**12.2**	
73	2410.53750	-0.90	1.0	12.0	2.0	-2.3	11.7	12
74	2410.58750	-0.85	1.0	12.0	2.0	-2.5	11.5	5
75	2410.63750	-0.80	1.0	12.0	2.0	-2.5	11.5	6
76	2410.68750	-0.75	1.0	12.0	2.0	-2.1	11.9	18
77	2410.73750	-0.70	1.0	12.0	2.0	-1.3	12.7	
78	2410.78750	-0.65	1.0	12.0	2.0	-1.3	12.7	
79	2410.83750	-0.60	1.0	12.0	2.0	-1.3	12.7	
80	2410.88750	-0.55	1.0	12.0	2.0	-1.6	12.4	
81	2410.93750	-0.50	1.0	12.0	2.0	-2.0	12.0	22
82	2410.98750	-0.45	1.0	12.0	2.0	-2.3	11.7	13
83	2411.03750	-0.40	1.0	12.0	2.0	-2.8	11.2	1
84	2411.08750	-0.35	1.0	12.0	2.0	-2.8	11.2	2
85	2411.13750	-0.30	1.0	12.0	2.0	-2.6	11.4	3
86	2411.18750	-0.25	1.0	12.0	2.0	-2.3	11.7	14
87	2411.23750	-0.20	1.0	12.0	2.0	-1.5	12.5	
88	2411.28750	-0.15	1.0	12.0	2.0	-1.2	12.8	
89	2411.33750	-0.10	1.0	12.0	2.0	-1.5	12.5	
90	2411.38750	-0.05	1.0	12.0	2.0	-2.5	11.5	7
91	2411.43750	0.00	1.0	12.0	2.0	-2.5	11.5	8
92	2411.48750	0.05	1.0	12.0	2.0	-2.0	12.0	23
93	2411.53750	0.10	1.0	12.0	2.0	-1.9	12.1	27
94	2411.58750	0.15	1.0	12.0	2.0	-1.6	12.4	
95	2411.63750	0.20	1.0	12.0	2.0	-1.3	12.7	
96	2411.68750	0.25	1.0	12.0	2.0	-2.1	11.9	19
97	2411.73750	0.30	1.0	12.0	2.0	-2.3	11.7	15
98	2411.78750	0.35	1.0	12.0	2.0	-2.3	11.7	16
99	2411.83750	0.40	1.0	12.0	2.0	-2.3	11.7	17
100	2411.88750	0.45	1.0	12.0	2.0	-2.0	12.0	24
101	2411.93750	0.50	1.0	12.0	2.0	-2.0	12.0	25
102	2411.98750	0.55	1.0	12.0	2.0	-1.7	12.3	
103	**2412.03750**	**0.60**	**1.0**	**12.0**	**2.0**	**-1.8**	**12.2**	

Test Point	Jammer Signal Freq. +/- Fc (MHz)	Jammer Signal Freq. +/- Fc (MHz)	(BER) (DQPSK) x10-5	(S/N)o (dB)	System Loss Lsys (dB)	Jammer to Signal Ratio Mj (dB)	Measured Processing Gain (dB)	Discarded Readings
104	2412.08750	0.65	1.0	12.0	2.0	-1.5	12.5	
105	2412.13750	0.70	1.0	12.0	2.0	-1.7	12.3	
106	2412.18750	0.75	1.0	12.0	2.0	-2.0	12.0	26
107	2412.23750	0.80	1.0	12.0	2.0	-2.5	11.5	9
108	2412.28750	0.85	1.0	12.0	2.0	-2.6	11.4	4
109	2412.33750	0.90	1.0	12.0	2.0	-1.9	12.1	28
110	2412.38750	0.95	1.0	12.0	2.0	-1.9	12.1	29
111	2412.43750	1.00	1.0	12.0	2.0	-1.9	12.1	30
112	2412.48750	1.05	1.0	12.0	2.0	-1.4	12.6	
113	2412.53750	1.10	1.0	12.0	2.0	-1.3	12.7	
114	2412.58750	1.15	1.0	12.0	2.0	-1.1	12.9	
115	2412.63750	1.20	1.0	12.0	2.0	-0.9	13.1	
116	2412.68750	1.25	1.0	12.0	2.0	-1.2	12.8	
117	2412.73750	1.30	1.0	12.0	2.0	-1.5	12.5	
118	**2412.78750**	**1.35**	**1.0**	**12.0**	**2.0**	**-1.8**	**12.2**	
119	2412.83750	1.40	1.0	12.0	2.0	-1.6	12.4	
120	2412.88750	1.45	1.0	12.0	2.0	-1.9	12.1	31
121	2412.93750	1.50	1.0	12.0	2.0	-1.9	12.1	32
122	2412.98750	1.55	1.0	12.0	2.0	-1.9	12.1	33
123	2413.03750	1.60	1.0	12.0	2.0	-1.6	12.4	
124	2413.08750	1.65	1.0	12.0	2.0	-1.1	12.9	
125	2413.13750	1.70	1.0	12.0	2.0	-0.9	13.1	
126	2413.18750	1.75	1.0	12.0	2.0	-0.7	13.3	
127	2413.23750	1.80	1.0	12.0	2.0	-0.8	13.2	
128	2413.28750	1.85	1.0	12.0	2.0	-1.0	13.0	
129	2413.33750	1.90	1.0	12.0	2.0	-1.3	12.7	
130	2413.38750	1.95	1.0	12.0	2.0	-1.2	12.8	
131	2413.43750	2.00	1.0	12.0	2.0	-1.1	12.9	
132	2413.48750	2.05	1.0	12.0	2.0	-1.1	12.9	
133	2413.53750	2.10	1.0	12.0	2.0	-0.5	13.5	
134	2413.58750	2.15	1.0	12.0	2.0	-0.2	13.8	
135	2413.63750	2.20	1.0	12.0	2.0	-0.2	13.8	
136	2413.68750	2.25	1.0	12.0	2.0	0.2	14.2	
137	2413.73750	2.30	1.0	12.0	2.0	0.2	14.2	
138	2413.78750	2.35	1.0	12.0	2.0	0.1	14.1	
139	2413.83750	2.40	1.0	12.0	2.0	0.0	14.0	
140	2413.88750	2.45	1.0	12.0	2.0	0.0	14.0	
141	2413.93750	2.50	1.0	12.0	2.0	0.0	14.0	
142	2413.98750	2.55	1.0	12.0	2.0	0.8	14.8	
143	2414.03750	2.60	1.0	12.0	2.0	1.7	15.7	
144	2414.08750	2.65	1.0	12.0	2.0	1.8	15.8	

Test Point	Jammer Signal Freq. +/- Fc (MHz)	Jammer Signal Freq. +/- Fc (MHz)	(BER) (DQPSK) x10-5	(S/N)o (dB)	System Loss Lsys (dB)	Jammer to Signal Ratio Mj (dB)	Measured Processing Gain (dB)	Discarded Readings
145	2414.13750	2.70	1.0	12.0	2.0	2.7	16.7	
146	2414.18750	2.75	1.0	12.0	2.0	2.6	16.6	
147	2414.23750	2.80	1.0	12.0	2.0	2.6	16.6	
148	2414.28750	2.85	1.0	12.0	2.0	2.7	16.7	
149	2414.33750	2.90	1.0	12.0	2.0	3.4	17.4	
150	2414.38750	2.95	1.0	12.0	2.0	3.3	17.3	
151	2414.43750	3.00	1.0	12.0	2.0	3.3	17.3	
152	2414.48750	3.05	1.0	12.0	2.0	2.9	16.9	
153	2414.53750	3.10	1.0	12.0	2.0	2.5	16.5	
154	2414.58750	3.15	1.0	12.0	2.0	2.5	16.5	
155	2414.63750	3.20	1.0	12.0	2.0	2.5	16.5	
156	2414.68750	3.25	1.0	12.0	2.0	3.0	17.0	
157	2414.73750	3.30	1.0	12.0	2.0	3.6	17.6	
158	2414.78750	3.35	1.0	12.0	2.0	3.9	17.9	
159	2414.83750	3.40	1.0	12.0	2.0	4.1	18.1	
160	2414.88750	3.45	1.0	12.0	2.0	4.5	18.5	
161	2414.93750	3.50	1.0	12.0	2.0	4.4	18.4	
162	2414.98750	3.55	1.0	12.0	2.0	4.3	18.3	
163	2415.03750	3.60	1.0	12.0	2.0	4.3	18.3	
164	2415.08750	3.65	1.0	12.0	2.0	4.4	18.4	
165	2415.13750	3.70	1.0	12.0	2.0	5.0	19.0	
166	2415.18750	3.75	1.0	12.0	2.0	5.2	19.2	
167	2415.23750	3.80	1.0	12.0	2.0	5.7	19.7	
168	2415.28750	3.85	1.0	12.0	2.0	5.7	19.7	
169	2415.33750	3.90	1.0	12.0	2.0	6.0	20.0	
170	2415.38750	3.95	1.0	12.0	2.0	5.9	19.9	
171	2415.43750	4.00	1.0	12.0	2.0	5.9	19.9	
172	2415.48750	4.05	1.0	12.0	2.0	6.3	20.3	
173	2415.53750	4.10	1.0	12.0	2.0	6.3	20.3	
174	2415.58750	4.15	1.0	12.0	2.0	6.6	20.6	
175	2415.63750	4.20	1.0	12.0	2.0	6.7	20.7	
176	2415.68750	4.25	1.0	12.0	2.0	6.7	20.7	
177	2415.73750	4.30	1.0	12.0	2.0	7.1	21.1	
178	2415.78750	4.35	1.0	12.0	2.0	7.1	21.1	
179	2415.83750	4.40	1.0	12.0	2.0	7.6	21.6	
180	2415.88750	4.45	1.0	12.0	2.0	7.5	21.5	
181	2415.93750	4.50	1.0	12.0	2.0	7.8	21.8	

Channel #6, Fc = 2419.8750 MHz	**Data Rate = 2.045 Mbps (DQPSK), Wide**
Chip Rate = 11.25 MHz	**PN Code Length = 11 chips/symbol**
6 dB BW = 8.4 MHz	

(S/N)o = 12 dB per attached Figure 4.5.1
Measured Processing Gain Gp = (S/N)o + Lsys + Mj = 12 + 2 + Mj = 14 + Mj (dB)
Theoretical Calculated Processing Gain = Chip Rate/Data rate = 11.25 MHz / (2.045 Mb/s)/(2 bits/symbol) = 11.0 or 10.4 dB

Note:
- Total Peak Power from the EUT's Tx measured at the EUT's Rx Input: P_t = -72 dBm
- Jamming signal level at measured at the EUT's receiver input: J
- Mj = J-P_t
- The following shaded boxes are discarded worst measurements (19.4% of total measurement points)

SUMMARY OF TEST RESULTS	
Theoretical Process Gain	**10.4 dB**
Minimum Measured Process Gain with discard of 19.4% of the worst measurements	**11.3 dB**

Test Point	Jammer Signal Freq. +/- Fc (MHz)	Jammer Signal Freq. +/- Fc (MHz)	(BER) (DQPSK) x10-5	(S/N)o (dB)	System Loss Lsys (dB)	Jammer to Signal Ratio Mj (dB)	Measured Processing Gain (dB)	Discarded Readings
1	2411.37500	-8.50	1.0	12.0	2.0	4.0	18.0	
2	2411.42500	-8.45	1.0	12.0	2.0	4.0	18.0	
3	2411.47500	-8.40	1.0	12.0	2.0	3.8	17.8	
4	2411.52500	-8.35	1.0	12.0	2.0	3.9	17.9	
5	2411.57500	-8.30	1.0	12.0	2.0	3.8	17.8	
6	2411.62500	-8.25	1.0	12.0	2.0	3.5	17.5	
7	2411.67500	-8.20	1.0	12.0	2.0	3.3	17.3	
8	2411.72500	-8.15	1.0	12.0	2.0	3.3	17.3	
9	2411.77500	-8.10	1.0	12.0	2.0	3.2	17.2	
10	2411.82500	-8.05	1.0	12.0	2.0	3.2	17.2	
11	2411.87500	-8.00	1.0	12.0	2.0	3.2	17.2	
12	2411.92500	-7.95	1.0	12.0	2.0	3.1	17.1	
13	2411.97500	-7.90	1.0	12.0	2.0	3.0	17.0	
14	2412.02500	-7.85	1.0	12.0	2.0	2.9	16.9	
15	2412.07500	-7.80	1.0	12.0	2.0	2.9	16.9	
16	2412.12500	-7.75	1.0	12.0	2.0	2.8	16.8	
17	2412.17500	-7.70	1.0	12.0	2.0	2.6	16.6	
18	2412.22500	-7.65	1.0	12.0	2.0	2.6	16.6	
19	2412.27500	-7.60	1.0	12.0	2.0	2.6	16.6	
20	2412.32500	-7.55	1.0	12.0	2.0	2.6	16.6	
21	2412.37500	-7.50	1.0	12.0	2.0	2.3	16.3	
22	2412.42500	-7.45	1.0	12.0	2.0	2.3	16.3	

Test Point	Jammer Signal Freq. +/- Fc (MHz)	Jammer Signal Freq. +/- Fc (MHz)	(BER) (DQPSK) x10-5	(S/N)o (dB)	System Loss Lsys (dB)	Jammer to Signal Ratio Mj (dB)	Measured Processing Gain (dB)	Discarded Readings
23	2412.47500	-7.40	1.0	12.0	2.0	2.3	16.3	
24	2412.52500	-7.35	1.0	12.0	2.0	2.1	16.1	
25	2412.57500	-7.30	1.0	12.0	2.0	2.0	16.0	
26	2412.62500	-7.25	1.0	12.0	2.0	1.9	15.9	
27	2412.67500	-7.20	1.0	12.0	2.0	1.8	15.8	
28	2412.72500	-7.15	1.0	12.0	2.0	1.7	15.7	
29	2412.77500	-7.10	1.0	12.0	2.0	1.7	15.7	
30	2412.82500	-7.05	1.0	12.0	2.0	1.8	15.8	
31	2412.87500	-7.00	1.0	12.0	2.0	1.7	15.7	
32	2412.92500	-6.95	1.0	12.0	2.0	1.7	15.7	
33	2412.97500	-6.90	1.0	12.0	2.0	1.7	15.7	
34	2413.02500	-6.85	1.0	12.0	2.0	1.9	15.9	
35	2413.07500	-6.80	1.0	12.0	2.0	1.5	15.5	
36	2413.12500	-6.75	1.0	12.0	2.0	1.3	15.3	
37	2413.17500	-6.70	1.0	12.0	2.0	1.2	15.2	
38	2413.22500	-6.65	1.0	12.0	2.0	1.1	15.1	
39	2413.27500	-6.60	1.0	12.0	2.0	1.1	15.1	
40	2413.32500	-6.55	1.0	12.0	2.0	1.1	15.1	
41	2413.37500	-6.50	1.0	12.0	2.0	1.0	15.0	
42	2413.42500	-6.45	1.0	12.0	2.0	0.9	14.9	
43	2413.47500	-6.40	1.0	12.0	2.0	1.0	15.0	
44	2413.52500	-6.35	1.0	12.0	2.0	0.8	14.8	
45	2413.57500	-6.30	1.0	12.0	2.0	0.7	14.7	
46	2413.62500	-6.25	1.0	12.0	2.0	0.7	14.7	
47	2413.67500	-6.20	1.0	12.0	2.0	0.8	14.8	
48	2413.72500	-6.15	1.0	12.0	2.0	0.7	14.7	
49	2413.77500	-6.10	1.0	12.0	2.0	0.5	14.5	
50	2413.82500	-6.05	1.0	12.0	2.0	0.6	14.6	
51	2413.87500	-6.00	1.0	12.0	2.0	0.5	14.5	
52	2413.92500	-5.95	1.0	12.0	2.0	0.4	14.4	
53	2413.97500	-5.90	1.0	12.0	2.0	0.5	14.5	
54	2414.02500	-5.85	1.0	12.0	2.0	0.5	14.5	
55	2414.07500	-5.80	1.0	12.0	2.0	0.5	14.5	
56	2414.12500	-5.75	1.0	12.0	2.0	0.3	14.3	
57	2414.17500	-5.70	1.0	12.0	2.0	0.2	14.2	
58	2414.22500	-5.65	1.0	12.0	2.0	0.1	14.1	
59	2414.27500	-5.60	1.0	12.0	2.0	0.1	14.1	
60	2414.32500	-5.55	1.0	12.0	2.0	0.1	14.1	
61	2414.37500	-5.50	1.0	12.0	2.0	0.3	14.3	
62	2414.42500	-5.45	1.0	12.0	2.0	0.2	14.2	
63	2414.47500	-5.40	1.0	12.0	2.0	-0.2	13.8	

Test Point	Jammer Signal Freq. +/- Fc (MHz)	Jammer Signal Freq. +/- Fc (MHz)	(BER) (DQPSK) x10-5	(S/N)o (dB)	System Loss Lsys (dB)	Jammer to Signal Ratio Mj (dB)	Measured Processing Gain (dB)	Discarded Readings
64	2414.52500	-5.35	1.0	12.0	2.0	-0.2	13.8	
65	2414.57500	-5.30	1.0	12.0	2.0	-0.2	13.8	
66	2414.62500	-5.25	1.0	12.0	2.0	-0.1	13.9	
67	2414.67500	-5.20	1.0	12.0	2.0	0.2	14.2	
68	2414.72500	-5.15	1.0	12.0	2.0	-0.5	13.5	
69	2414.77500	-5.10	1.0	12.0	2.0	-0.6	13.4	
70	2414.82500	-5.05	1.0	12.0	2.0	-1.2	12.8	
71	2414.87500	-5.00	1.0	12.0	2.0	-1.5	12.5	
72	2414.92500	-4.95	1.0	12.0	2.0	-1.6	12.4	
73	2414.97500	-4.90	1.0	12.0	2.0	-1.8	12.2	
74	2415.02500	-4.85	1.0	12.0	2.0	-1.8	12.2	
75	2415.07500	-4.80	1.0	12.0	2.0	-1.7	12.3	
76	2415.12500	-4.75	1.0	12.0	2.0	-1.4	12.6	
77	2415.17500	-4.70	1.0	12.0	2.0	-1.4	12.6	
78	2415.22500	-4.65	1.0	12.0	2.0	-1.2	12.8	
79	2415.27500	-4.60	1.0	12.0	2.0	-1.1	12.9	
80	2415.32500	-4.55	1.0	12.0	2.0	-1.0	13.0	
81	2415.37500	-4.50	1.0	12.0	2.0	-0.9	13.1	
82	2415.42500	-4.45	1.0	12.0	2.0	-1.0	13.0	
83	2415.47500	-4.40	1.0	12.0	2.0	-1.4	12.6	
84	2415.52500	-4.35	1.0	12.0	2.0	-1.5	12.5	
85	2415.57500	-4.30	1.0	12.0	2.0	-1.5	12.5	
86	2415.62500	-4.25	1.0	12.0	2.0	-1.7	12.3	
87	2415.67500	-4.20	1.0	12.0	2.0	-2.1	11.9	
88	2415.72500	-4.15	1.0	12.0	2.0	-2.6	11.4	
89	**2415.77500**	**-4.10**	**1.0**	**12.0**	**2.0**	**-2.7**	**11.3**	
90	**2415.82500**	**-4.05**	**1.0**	**12.0**	**2.0**	**-2.7**	**11.3**	
91	2415.87500	-4.00	1.0	12.0	2.0	-2.8	11.2	49
92	2415.92500	-3.95	1.0	12.0	2.0	-2.8	11.2	50
93	2415.97500	-3.90	1.0	12.0	2.0	-2.8	11.2	51
94	2416.02500	-3.85	1.0	12.0	2.0	-2.8	11.2	52
95	2416.07500	-3.80	1.0	12.0	2.0	-2.8	11.2	53
96	**2416.12500**	**-3.75**	**1.0**	**12.0**	**2.0**	**-2.7**	**11.3**	
97	2416.17500	-3.70	1.0	12.0	2.0	-2.5	11.5	
98	2416.22500	-3.65	1.0	12.0	2.0	-2.3	11.7	
99	2416.27500	-3.60	1.0	12.0	2.0	-2.1	11.9	
100	2416.32500	-3.55	1.0	12.0	2.0	-1.8	12.2	
101	2416.37500	-3.50	1.0	12.0	2.0	-1.7	12.3	
102	2416.42500	-3.45	1.0	12.0	2.0	-1.7	12.3	
103	2416.47500	-3.40	1.0	12.0	2.0	-1.6	12.4	
104	2416.52500	-3.35	1.0	12.0	2.0	-1.6	12.4	

Test Point	Jammer Signal Freq. +/- Fc (MHz)	Jammer Signal Freq. +/- Fc (MHz)	(BER) (DQPSK) x10-5	(S/N)o (dB)	System Loss Lsys (dB)	Jammer to Signal Ratio Mj (dB)	Measured Processing Gain (dB)	Discarded Readings
105	2416.57500	-3.30	1.0	12.0	2.0	-2.0	12.0	
106	2416.62500	-3.25	1.0	12.0	2.0	-2.0	12.0	
107	2416.67500	-3.20	1.0	12.0	2.0	-2.8	11.2	54
108	2416.72500	-3.15	1.0	12.0	2.0	-2.8	11.2	55
109	2416.77500	-3.10	1.0	12.0	2.0	-2.9	11.1	41
110	2416.82500	-3.05	1.0	12.0	2.0	-3.4	10.6	10
111	2416.87500	-3.00	1.0	12.0	2.0	-3.3	10.7	15
112	2416.92500	-2.95	1.0	12.0	2.0	-3.4	10.6	11
113	2416.97500	-2.90	1.0	12.0	2.0	-3.0	11.0	34
114	2417.02500	-2.85	1.0	12.0	2.0	-3.0	11.0	35
115	2417.07500	-2.80	1.0	12.0	2.0	-2.9	11.1	42
116	2417.12500	-2.75	1.0	12.0	2.0	-2.8	11.2	56
117	2417.17500	-2.70	1.0	12.0	2.0	-2.8	11.2	57
118	2417.22500	-2.65	1.0	12.0	2.0	-2.6	11.4	
119	2417.27500	-2.60	1.0	12.0	2.0	-2.4	11.6	
120	2417.32500	-2.55	1.0	12.0	2.0	-2.3	11.7	
121	2417.37500	-2.50	1.0	12.0	2.0	-2.0	12.0	
122	2417.42500	-2.45	1.0	12.0	2.0	-1.9	12.1	
123	2417.47500	-2.40	1.0	12.0	2.0	-1.9	12.1	
124	2417.52500	-2.35	1.0	12.0	2.0	-1.8	12.2	
125	2417.57500	-2.30	1.0	12.0	2.0	-1.8	12.2	
126	2417.62500	-2.25	1.0	12.0	2.0	-1.9	12.1	
127	2417.67500	-2.20	1.0	12.0	2.0	-1.9	12.1	
128	2417.72500	-2.15	1.0	12.0	2.0	-2.0	12.0	
129	2417.77500	-2.10	1.0	12.0	2.0	-2.3	11.7	
130	2417.82500	-2.05	1.0	12.0	2.0	-2.4	11.6	
131	2417.87500	-2.00	1.0	12.0	2.0	-2.9	11.1	43
132	2417.92500	-1.95	1.0	12.0	2.0	-3.2	10.8	20
133	2417.97500	-1.90	1.0	12.0	2.0	-3.3	10.7	16
134	2418.02500	-1.85	1.0	12.0	2.0	-3.2	10.8	21
135	2418.07500	-1.80	1.0	12.0	2.0	-3.3	10.7	17
136	2418.12500	-1.75	1.0	12.0	2.0	-3.4	10.6	12
137	2418.17500	-1.70	1.0	12.0	2.0	-3.4	10.6	13
138	2418.22500	-1.65	1.0	12.0	2.0	-3.5	10.5	5
139	2418.27500	-1.60	1.0	12.0	2.0	-3.5	10.5	6
140	2418.32500	-1.55	1.0	12.0	2.0	-3.3	10.7	18
141	2418.37500	-1.50	1.0	12.0	2.0	-3.1	10.9	26
142	2418.42500	-1.45	1.0	12.0	2.0	-3.0	11.0	36
143	2418.47500	-1.40	1.0	12.0	2.0	-2.3	11.7	
144	2418.52500	-1.35	1.0	12.0	2.0	-2.2	11.8	
145	2418.57500	-1.30	1.0	12.0	2.0	-2.1	11.9	

Test Point	Jammer Signal Freq. +/- Fc (MHz)	Jammer Signal Freq. +/- Fc (MHz)	(BER) (DQPSK) x10-5	(S/N)o (dB)	System Loss Lsys (dB)	Jammer to Signal Ratio Mj (dB)	Measured Processing Gain (dB)	Discarded Readings
146	2418.62500	-1.25	1.0	12.0	2.0	-2.1	11.9	
147	2418.67500	-1.20	1.0	12.0	2.0	-2.2	11.8	
148	2418.72500	-1.15	1.0	12.0	2.0	-2.5	11.5	
149	2418.77500	-1.10	1.0	12.0	2.0	-2.5	11.5	
150	**2418.82500**	**-1.05**	**1.0**	**12.0**	**2.0**	**-2.7**	**11.3**	
151	2418.87500	-1.00	1.0	12.0	2.0	-3.1	10.9	27
152	2418.92500	-0.95	1.0	12.0	2.0	-3.1	10.9	28
153	2418.97500	-0.90	1.0	12.0	2.0	-3.4	10.6	14
154	2419.02500	-0.85	1.0	12.0	2.0	-3.7	10.3	2
155	2419.07500	-0.80	1.0	12.0	2.0	-3.7	10.3	3
156	2419.12500	-0.75	1.0	12.0	2.0	-3.8	10.2	1
157	2419.17500	-0.70	1.0	12.0	2.0	-3.6	10.4	4
158	2419.22500	-0.65	1.0	12.0	2.0	-3.5	10.5	7
159	2419.27500	-0.60	1.0	12.0	2.0	-3.5	10.5	8
160	2419.32500	-0.55	1.0	12.0	2.0	-3.5	10.5	9
161	2419.37500	-0.50	1.0	12.0	2.0	-3.1	10.9	29
162	2419.42500	-0.45	1.0	12.0	2.0	-2.9	11.1	44
163	2419.47500	-0.40	1.0	12.0	2.0	-2.3	11.7	
164	2419.52500	-0.35	1.0	12.0	2.0	-2.3	11.7	
165	2419.57500	-0.30	1.0	12.0	2.0	-2.3	11.7	
166	2419.62500	-0.25	1.0	12.0	2.0	-2.4	11.6	
167	2419.67500	-0.20	1.0	12.0	2.0	-2.5	11.5	
168	2419.72500	-0.15	1.0	12.0	2.0	-2.8	11.2	58
169	2419.77500	-0.10	1.0	12.0	2.0	-3.2	10.8	22
170	2419.82500	-0.05	1.0	12.0	2.0	-3.3	10.7	19
171	2419.87500	0.00	1.0	12.0	2.0	-3.2	10.8	23
172	2419.92500	0.05	1.0	12.0	2.0	-3.1	10.9	30
173	2419.97500	0.10	1.0	12.0	2.0	-3.1	10.9	31
174	2420.02500	0.15	1.0	12.0	2.0	-3.1	10.9	32
175	2420.07500	0.20	1.0	12.0	2.0	-2.6	11.4	
176	2420.12500	0.25	1.0	12.0	2.0	-2.3	11.7	
177	2420.17500	0.30	1.0	12.0	2.0	-2.4	11.6	
178	2420.22500	0.35	1.0	12.0	2.0	-2.5	11.5	
179	2420.27500	0.40	1.0	12.0	2.0	-2.5	11.5	
180	2420.32500	0.45	1.0	12.0	2.0	-2.6	11.4	
181	**2420.37500**	**0.50**	**1.0**	**12.0**	**2.0**	**-2.7**	**11.3**	
182	2420.42500	0.55	1.0	12.0	2.0	-3.0	11.0	37
183	2420.47500	0.60	1.0	12.0	2.0	-3.1	10.9	33
184	2420.52500	0.65	1.0	12.0	2.0	-2.9	11.1	45
185	2420.57500	0.70	1.0	12.0	2.0	-2.8	11.2	59
186	2420.62500	0.75	1.0	12.0	2.0	-3.0	11.0	38

Test Point	Jammer Signal Freq. +/- Fc (MHz)	Jammer Signal Freq. +/- Fc (MHz)	(BER) (DQPSK) x10-5	(S/N)o (dB)	System Loss Lsys (dB)	Jammer to Signal Ratio Mj (dB)	Measured Processing Gain (dB)	Discarded Readings
187	2420.67500	0.80	1.0	12.0	2.0	-3.0	11.0	39
188	2420.72500	0.85	1.0	12.0	2.0	-2.8	11.2	60
189	2420.77500	0.90	1.0	12.0	2.0	-2.8	11.2	61
190	2420.82500	0.95	1.0	12.0	2.0	-2.6	11.4	
191	2420.87500	1.00	1.0	12.0	2.0	-2.6	11.4	
192	2420.92500	1.05	1.0	12.0	2.0	-2.5	11.5	
193	2420.97500	1.10	1.0	12.0	2.0	-2.5	11.5	
194	2421.02500	1.15	1.0	12.0	2.0	-2.6	11.4	
195	2421.07500	1.20	1.0	12.0	2.0	-2.5	11.5	
196	2421.12500	1.25	1.0	12.0	2.0	-2.4	11.6	
197	2421.17500	1.30	1.0	12.0	2.0	-2.0	12.0	
198	2421.22500	1.35	1.0	12.0	2.0	-2.2	11.8	
199	2421.27500	1.40	1.0	12.0	2.0	-2.2	11.8	
200	2421.32500	1.45	1.0	12.0	2.0	-2.2	11.8	
201	2421.37500	1.50	1.0	12.0	2.0	-2.9	11.1	46
202	2421.42500	1.55	1.0	12.0	2.0	-2.9	11.1	47
203	2421.47500	1.60	1.0	12.0	2.0	-3.2	10.8	24
204	2421.52500	1.65	1.0	12.0	2.0	-3.2	10.8	25
205	2421.57500	1.70	1.0	12.0	2.0	-2.9	11.1	48
206	2421.62500	1.75	1.0	12.0	2.0	-3.0	11.0	40
207	**2421.67500**	**1.80**	**1.0**	**12.0**	**2.0**	**-2.7**	**11.3**	
208	2421.72500	1.85	1.0	12.0	2.0	-2.8	11.2	62
209	2421.77500	1.90	1.0	12.0	2.0	-2.7	11.3	
210	2421.82500	1.95	1.0	12.0	2.0	-2.8	11.2	63
211	2421.87500	2.00	1.0	12.0	2.0	-2.5	11.5	
212	2421.92500	2.05	1.0	12.0	2.0	-2.5	11.5	
213	2421.97500	2.10	1.0	12.0	2.0	-2.1	11.9	
214	2422.02500	2.15	1.0	12.0	2.0	-2.1	11.9	
215	2422.07500	2.20	1.0	12.0	2.0	-2.1	11.9	
216	2422.12500	2.25	1.0	12.0	2.0	-2.1	11.9	
217	2422.17500	2.30	1.0	12.0	2.0	-1.8	12.2	
218	2422.22500	2.35	1.0	12.0	2.0	-1.8	12.2	
219	2422.27500	2.40	1.0	12.0	2.0	-1.8	12.2	
220	2422.32500	2.45	1.0	12.0	2.0	-1.8	12.2	
221	2422.37500	2.50	1.0	12.0	2.0	-2.0	12.0	
222	2422.42500	2.55	1.0	12.0	2.0	-2.0	12.0	
223	2422.47500	2.60	1.0	12.0	2.0	-2.1	11.9	
224	2422.52500	2.65	1.0	12.0	2.0	-2.2	11.8	
225	2422.57500	2.70	1.0	12.0	2.0	-2.3	11.7	
226	2422.62500	2.75	1.0	12.0	2.0	-2.5	11.5	
227	2422.67500	2.80	1.0	12.0	2.0	-2.5	11.5	

Test Point	Jammer Signal Freq. +/- Fc (MHz)	Jammer Signal Freq. +/- Fc (MHz)	(BER) (DQPSK) x10-5	(S/N)o (dB)	System Loss Lsys (dB)	Jammer to Signal Ratio Mj (dB)	Measured Processing Gain (dB)	Discarded Readings
228	2422.72500	2.85	1.0	12.0	2.0	-2.6	11.4	
229	**2422.77500**	**2.90**	**1.0**	**12.0**	**2.0**	**-2.7**	**11.3**	
230	2422.82500	2.95	1.0	12.0	2.0	-2.8	11.2	64
231	2422.87500	3.00	1.0	12.0	2.0	-2.8	11.2	65
232	2422.92500	3.05	1.0	12.0	2.0	-2.7	11.3	
233	2422.97500	3.10	1.0	12.0	2.0	-2.8	11.2	66
234	2423.02500	3.15	1.0	12.0	2.0	-2.6	11.4	
235	2423.07500	3.20	1.0	12.0	2.0	-2.3	11.7	
236	2423.12500	3.25	1.0	12.0	2.0	-2.1	11.9	
237	2423.17500	3.30	1.0	12.0	2.0	-2.0	12.0	
238	2423.22500	3.35	1.0	12.0	2.0	-1.9	12.1	
239	2423.27500	3.40	1.0	12.0	2.0	-1.7	12.3	
240	2423.32500	3.45	1.0	12.0	2.0	-1.5	12.5	
241	2423.37500	3.50	1.0	12.0	2.0	-1.5	12.5	
242	2423.42500	3.55	1.0	12.0	2.0	-1.5	12.5	
243	2423.47500	3.60	1.0	12.0	2.0	-1.6	12.4	
244	2423.52500	3.65	1.0	12.0	2.0	-1.6	12.4	
245	2423.57500	3.70	1.0	12.0	2.0	-1.8	12.2	
246	2423.62500	3.75	1.0	12.0	2.0	-2.0	12.0	
247	2423.67500	3.80	1.0	12.0	2.0	-2.0	12.0	
248	2423.72500	3.85	1.0	12.0	2.0	-2.1	11.9	
249	2423.77500	3.90	1.0	12.0	2.0	-1.9	12.1	
250	2423.82500	3.95	1.0	12.0	2.0	-1.9	12.1	
251	2423.87500	4.00	1.0	12.0	2.0	-1.9	12.1	
252	2423.92500	4.05	1.0	12.0	2.0	-1.6	12.4	
253	2423.97500	4.10	1.0	12.0	2.0	-1.5	12.5	
254	2424.02500	4.15	1.0	12.0	2.0	-1.7	12.3	
255	2424.07500	4.20	1.0	12.0	2.0	-1.2	12.8	
256	2424.12500	4.25	1.0	12.0	2.0	-0.9	13.1	
257	2424.17500	4.30	1.0	12.0	2.0	-0.9	13.1	
258	2424.22500	4.35	1.0	12.0	2.0	-0.9	13.1	
259	2424.27500	4.40	1.0	12.0	2.0	-0.6	13.4	
260	2424.32500	4.45	1.0	12.0	2.0	-0.5	13.5	
261	2424.37500	4.50	1.0	12.0	2.0	-0.4	13.6	
262	2424.42500	4.55	1.0	12.0	2.0	-0.3	13.7	
263	2424.47500	4.60	1.0	12.0	2.0	-0.3	13.7	
264	2424.52500	4.65	1.0	12.0	2.0	-0.3	13.7	
265	2424.57500	4.70	1.0	12.0	2.0	-0.3	13.7	
266	2424.62500	4.75	1.0	12.0	2.0	-0.5	13.5	
267	2424.67500	4.80	1.0	12.0	2.0	-0.6	13.4	
268	2424.72500	4.85	1.0	12.0	2.0	-0.7	13.3	

Test Point	Jammer Signal Freq. +/- Fc (MHz)	Jammer Signal Freq. +/- Fc (MHz)	(BER) (DQPSK) x10-5	(S/N)o (dB)	System Loss Lsys (dB)	Jammer to Signal Ratio Mj (dB)	Measured Processing Gain (dB)	Discarded Readings
269	2424.77500	4.90	1.0	12.0	2.0	-0.6	13.4	
270	2424.82500	4.95	1.0	12.0	2.0	-0.4	13.6	
271	2424.87500	5.00	1.0	12.0	2.0	-0.2	13.8	
272	2424.92500	5.05	1.0	12.0	2.0	0.2	14.2	
273	2424.97500	5.10	1.0	12.0	2.0	0.5	14.5	
274	2425.02500	5.15	1.0	12.0	2.0	1.0	15.0	
275	2425.07500	5.20	1.0	12.0	2.0	1.0	15.0	
276	2425.12500	5.25	1.0	12.0	2.0	2.0	16.0	
277	2425.17500	5.30	1.0	12.0	2.0	2.0	16.0	
278	2425.22500	5.35	1.0	12.0	2.0	2.1	16.1	
279	2425.27500	5.40	1.0	12.0	2.0	2.1	16.1	
280	2425.32500	5.45	1.0	12.0	2.0	2.1	16.1	
281	2425.37500	5.50	1.0	12.0	2.0	2.1	16.1	
282	2425.42500	5.55	1.0	12.0	2.0	2.1	16.1	
283	2425.47500	5.60	1.0	12.0	2.0	2.2	16.2	
284	2425.52500	5.65	1.0	12.0	2.0	2.2	16.2	
285	2425.57500	5.70	1.0	12.0	2.0	2.2	16.2	
286	2425.62500	5.75	1.0	12.0	2.0	2.3	16.3	
287	2425.67500	5.80	1.0	12.0	2.0	2.4	16.4	
288	2425.72500	5.85	1.0	12.0	2.0	2.8	16.8	
289	2425.77500	5.90	1.0	12.0	2.0	3.0	17.0	
290	2425.82500	5.95	1.0	12.0	2.0	3.0	17.0	
291	2425.87500	6.00	1.0	12.0	2.0	3.0	17.0	
292	2425.92500	6.05	1.0	12.0	2.0	3.0	17.0	
293	2425.97500	6.10	1.0	12.0	2.0	3.0	17.0	
294	2426.02500	6.15	1.0	12.0	2.0	2.8	16.8	
295	2426.07500	6.20	1.0	12.0	2.0	2.6	16.6	
296	2426.12500	6.25	1.0	12.0	2.0	2.6	16.6	
297	2426.17500	6.30	1.0	12.0	2.0	2.6	16.6	
298	2426.22500	6.35	1.0	12.0	2.0	2.6	16.6	
299	2426.27500	6.40	1.0	12.0	2.0	2.9	16.9	
300	2426.32500	6.45	1.0	12.0	2.0	3.0	17.0	
301	2426.37500	6.50	1.0	12.0	2.0	3.5	17.5	
302	2426.42500	6.55	1.0	12.0	2.0	3.8	17.8	
303	2426.47500	6.60	1.0	12.0	2.0	4.1	18.1	
304	2426.52500	6.65	1.0	12.0	2.0	3.9	17.9	
305	2426.57500	6.70	1.0	12.0	2.0	4.2	18.2	
306	2426.62500	6.75	1.0	12.0	2.0	4.1	18.1	
307	2426.67500	6.80	1.0	12.0	2.0	4.1	18.1	
308	2426.72500	6.85	1.0	12.0	2.0	4.6	18.6	
309	2426.77500	6.90	1.0	12.0	2.0	4.6	18.6	

Test Point	Jammer Signal Freq. +/- Fc (MHz)	Jammer Signal Freq. +/- Fc (MHz)	(BER) (DQPSK) x10-5	(S/N)o (dB)	System Loss Lsys (dB)	Jammer to Signal Ratio Mj (dB)	Measured Processing Gain (dB)	Discarded Readings
310	2426.82500	6.95	1.0	12.0	2.0	4.6	18.6	
311	2426.87500	7.00	1.0	12.0	2.0	4.5	18.5	
312	2426.92500	7.05	1.0	12.0	2.0	4.6	18.6	
313	2426.97500	7.10	1.0	12.0	2.0	4.7	18.7	
314	2427.02500	7.15	1.0	12.0	2.0	4.7	18.7	
315	2427.07500	7.20	1.0	12.0	2.0	4.7	18.7	
316	2427.12500	7.25	1.0	12.0	2.0	4.9	18.9	
317	2427.17500	7.30	1.0	12.0	2.0	4.9	18.9	
318	2427.22500	7.35	1.0	12.0	2.0	5.0	19.0	
319	2427.27500	7.40	1.0	12.0	2.0	5.3	19.3	
320	2427.32500	7.45	1.0	12.0	2.0	5.2	19.2	
321	2427.37500	7.50	1.0	12.0	2.0	5.4	19.4	
322	2427.42500	7.55	1.0	12.0	2.0	5.4	19.4	
323	2427.47500	7.60	1.0	12.0	2.0	5.6	19.6	
324	2427.52500	7.65	1.0	12.0	2.0	5.8	19.8	
325	2427.57500	7.70	1.0	12.0	2.0	5.8	19.8	
326	2427.62500	7.75	1.0	12.0	2.0	5.8	19.8	
327	2427.67500	7.80	1.0	12.0	2.0	5.7	19.7	
328	2427.72500	7.85	1.0	12.0	2.0	6.1	20.1	
329	2427.77500	7.90	1.0	12.0	2.0	6.0	20.0	
330	2427.82500	7.95	1.0	12.0	2.0	6.4	20.4	
331	2427.87500	8.00	1.0	12.0	2.0	6.2	20.2	
332	2427.92500	8.05	1.0	12.0	2.0	6.3	20.3	
333	2427.97500	8.10	1.0	12.0	2.0	6.3	20.3	
334	2428.02500	8.15	1.0	12.0	2.0	6.3	20.3	
335	2428.07500	8.20	1.0	12.0	2.0	6.6	20.6	
336	2428.12500	8.25	1.0	12.0	2.0	6.6	20.6	
337	2428.17500	8.30	1.0	12.0	2.0	7.0	21.0	
338	2428.22500	8.35	1.0	12.0	2.0	7.0	21.0	
339	2428.27500	8.40	1.0	12.0	2.0	7.1	21.1	
340	2428.32500	8.45	1.0	12.0	2.0	7.2	21.2	
341	2428.37500	8.50	1.0	12.0	2.0	7.3	21.3	

Channel #18, Fc = 2464.8750 MHz	**Data Rate = 0.818 Mbps (DQPSK), Narrow**
Chip Rate = 4.5 MHz	**PN Code Length = 11 chips/symbol**
6 dB BW = 4 MHz	

(S/N)o = 12 dB per attached Figure 4.5.1
Measured Processing Gain Gp = (S/N)o + Lsys + Mj = 12 + 2 + Mj = 14 + Mj (dB)
Theoretical Calculated Processing Gain = Chip Rate/Data rate = 4.5 MHz / (0.818 Mb/s)/(2 bits/symbol) = 11 or 10.4 dB

Note:
- Total Peak Power from the EUT's Tx measured at the EUT's Rx Input: P_t = -74 dBm
- Jamming signal level at measured at the EUT's receiver input: J
- Mj = J-P_t
- The following shaded boxes are discarded worst measurements (17.7% of total measurement points)

SUMMARY OF TEST RESULTS	
Theoretical Process Gain	**10.4 dB**
Minimum Measured Process Gain with discard of 17.7% of the worst measurements	**12.2 dB**

Test Point	Jammer Signal Freq. +/- Fc (MHz)	Jammer Signal Freq. +/- Fc (MHz)	(BER) (DQPSK) x10-5	(S/N)o (dB)	System Loss Lsys (dB)	Jammer to Signal Ratio Mj (dB)	Measured Processing Gain (dB)	Discarded Readings
1	2460.37500	-4.50	1.0	12.0	2.0	5.0	19.0	
2	2460.42500	-4.45	1.0	12.0	2.0	5.0	19.0	
3	2460.47500	-4.40	1.0	12.0	2.0	5.0	19.0	
4	2460.52500	-4.35	1.0	12.0	2.0	4.9	18.9	
5	2460.57500	-4.30	1.0	12.0	2.0	4.7	18.7	
6	2460.62500	-4.25	1.0	12.0	2.0	4.6	18.6	
7	2460.67500	-4.20	1.0	12.0	2.0	4.5	18.5	
8	2460.72500	-4.15	1.0	12.0	2.0	4.3	18.3	
9	2460.77500	-4.10	1.0	12.0	2.0	4.1	18.1	
10	2460.82500	-4.05	1.0	12.0	2.0	4.0	18.0	
11	2460.87500	-4.00	1.0	12.0	2.0	3.8	17.8	
12	2460.92500	-3.95	1.0	12.0	2.0	3.8	17.8	
13	2460.97500	-3.90	1.0	12.0	2.0	3.5	17.5	
14	2461.02500	-3.85	1.0	12.0	2.0	3.5	17.5	
15	2461.07500	-3.80	1.0	12.0	2.0	3.3	17.3	
16	2461.12500	-3.75	1.0	12.0	2.0	3.1	17.1	
17	2461.17500	-3.70	1.0	12.0	2.0	3.0	17.0	
18	2461.22500	-3.65	1.0	12.0	2.0	3.0	17.0	
19	2461.27500	-3.60	1.0	12.0	2.0	2.7	16.7	
20	2461.32500	-3.55	1.0	12.0	2.0	2.7	16.7	
21	2461.37500	-3.50	1.0	12.0	2.0	2.6	16.6	
22	2461.42500	-3.45	1.0	12.0	2.0	2.5	16.5	
23	2461.47500	-3.40	1.0	12.0	2.0	2.2	16.2	

Test Point	Jammer Signal Freq. +/- Fc (MHz)	Jammer Signal Freq. +/- Fc (MHz)	(BER) (DQPSK) x10-5	(S/N)o (dB)	System Loss Lsys (dB)	Jammer to Signal Ratio Mj (dB)	Measured Processing Gain (dB)	Discarded Readings
24	2461.52500	-3.35	1.0	12.0	2.0	2.4	16.4	
25	2461.57500	-3.30	1.0	12.0	2.0	2.3	16.3	
26	2461.62500	-3.25	1.0	12.0	2.0	2.2	16.2	
27	2461.67500	-3.20	1.0	12.0	2.0	1.9	15.9	
28	2461.72500	-3.15	1.0	12.0	2.0	1.9	15.9	
29	2461.77500	-3.10	1.0	12.0	2.0	1.8	15.8	
30	2461.82500	-3.05	1.0	12.0	2.0	1.9	15.9	
31	2461.87500	-3.00	1.0	12.0	2.0	1.8	15.8	
32	2461.92500	-2.95	1.0	12.0	2.0	1.7	15.7	
33	2461.97500	-2.90	1.0	12.0	2.0	1.6	15.6	
34	2462.02500	-2.85	1.0	12.0	2.0	1.5	15.5	
35	2462.07500	-2.80	1.0	12.0	2.0	1.4	15.4	
36	2462.12500	-2.75	1.0	12.0	2.0	1.4	15.4	
37	2462.17500	-2.70	1.0	12.0	2.0	1.3	15.3	
38	2462.22500	-2.65	1.0	12.0	2.0	1.1	15.1	
39	2462.27500	-2.60	1.0	12.0	2.0	1.2	15.2	
40	2462.32500	-2.55	1.0	12.0	2.0	0.8	14.8	
41	2462.37500	-2.50	1.0	12.0	2.0	0.8	14.8	
42	2462.42500	-2.45	1.0	12.0	2.0	0.7	14.7	
43	2462.47500	-2.40	1.0	12.0	2.0	0.9	14.9	
44	2462.52500	-2.35	1.0	12.0	2.0	1.0	15.0	
45	2462.57500	-2.30	1.0	12.0	2.0	0.9	14.9	
46	2462.62500	-2.25	1.0	12.0	2.0	0.9	14.9	
47	2462.67500	-2.20	1.0	12.0	2.0	0.8	14.8	
48	2462.72500	-2.15	1.0	12.0	2.0	0.9	14.9	
49	2462.77500	-2.10	1.0	12.0	2.0	0.9	14.9	
50	2462.82500	-2.05	1.0	12.0	2.0	0.4	14.4	
51	2462.87500	-2.00	1.0	12.0	2.0	-0.6	13.4	
52	2462.92500	-1.95	1.0	12.0	2.0	-1.0	13.0	
53	2462.97500	-1.90	1.0	12.0	2.0	-0.8	13.2	
54	2463.02500	-1.85	1.0	12.0	2.0	-0.4	13.6	
55	2463.07500	-1.80	1.0	12.0	2.0	0.0	14.0	
56	2463.12500	-1.75	1.0	12.0	2.0	-0.2	13.8	
57	2463.17500	-1.70	1.0	12.0	2.0	-0.8	13.2	
58	2463.22500	-1.65	1.0	12.0	2.0	-1.4	12.6	
59	2463.27500	-1.60	1.0	12.0	2.0	-1.4	12.6	
60	2463.32500	-1.55	1.0	12.0	2.0	-1.5	12.5	
61	2463.37500	-1.50	1.0	12.0	2.0	-1.5	12.5	
62	2463.42500	-1.45	1.0	12.0	2.0	-1.0	13.0	
63	2463.47500	-1.40	1.0	12.0	2.0	-0.6	13.4	
64	2463.52500	-1.35	1.0	12.0	2.0	-0.4	13.6	

Test Point	Jammer Signal Freq. +/- Fc (MHz)	Jammer Signal Freq. +/- Fc (MHz)	(BER) (DQPSK) x10-5	(S/N)o (dB)	System Loss Lsys (dB)	Jammer to Signal Ratio Mj (dB)	Measured Processing Gain (dB)	Discarded Readings
65	2463.57500	-1.30	1.0	12.0	2.0	-0.6	13.4	
66	2463.62500	-1.25	1.0	12.0	2.0	-1.6	12.4	
67	2463.67500	-1.20	1.0	12.0	2.0	-2.3	11.7	16
68	2463.72500	-1.15	1.0	12.0	2.0	-2.3	11.7	17
69	2463.77500	-1.10	1.0	12.0	2.0	-2.0	12.0	26
70	2463.82500	-1.05	1.0	12.0	2.0	-1.6	12.4	
71	2463.87500	-1.00	1.0	12.0	2.0	-1.4	12.6	
72	2463.92500	-0.95	1.0	12.0	2.0	-0.8	13.2	
73	2463.97500	-0.90	1.0	12.0	2.0	-0.9	13.1	
74	2464.02500	-0.85	1.0	12.0	2.0	-1.2	12.8	
75	2464.07500	-0.80	1.0	12.0	2.0	-1.9	12.1	31
76	2464.12500	-0.75	1.0	12.0	2.0	-2.5	11.5	9
77	2464.17500	-0.70	1.0	12.0	2.0	-2.6	11.4	5
78	2464.22500	-0.65	1.0	12.0	2.0	-2.6	11.4	6
79	2464.27500	-0.60	1.0	12.0	2.0	-2.3	11.7	18
80	2464.32500	-0.55	1.0	12.0	2.0	-1.2	12.8	
81	2464.37500	-0.50	1.0	12.0	2.0	-1.3	12.7	
82	2464.42500	-0.45	1.0	12.0	2.0	-1.6	12.4	
83	2464.47500	-0.40	1.0	12.0	2.0	-2.3	11.7	19
84	2464.52500	-0.35	1.0	12.0	2.0	-2.4	11.6	13
85	2464.57500	-0.30	1.0	12.0	2.0	-2.8	11.2	2
86	2464.62500	-0.25	1.0	12.0	2.0	-2.8	11.2	3
87	2464.67500	-0.20	1.0	12.0	2.0	-2.5	11.5	10
88	2464.72500	-0.15	1.0	12.0	2.0	-1.7	12.3	
89	2464.77500	-0.10	1.0	12.0	2.0	-1.9	12.1	32
90	2464.82500	-0.05	1.0	12.0	2.0	-2.6	11.4	7
91	2464.87500	0.00	1.0	12.0	2.0	-2.9	11.1	1
92	2464.92500	0.05	1.0	12.0	2.0	-2.3	11.7	20
93	2464.97500	0.10	1.0	12.0	2.0	-2.0	12.0	27
94	2465.02500	0.15	1.0	12.0	2.0	-2.0	12.0	28
95	2465.07500	0.20	1.0	12.0	2.0	-2.3	11.7	21
96	2465.12500	0.25	1.0	12.0	2.0	-2.5	11.5	11
97	2465.17500	0.30	1.0	12.0	2.0	-2.6	11.4	8
98	2465.22500	0.35	1.0	12.0	2.0	-2.4	11.6	14
99	2465.27500	0.40	1.0	12.0	2.0	-2.4	11.6	15
100	2465.32500	0.45	1.0	12.0	2.0	-2.1	11.9	25
101	**2465.37500**	**0.50**	**1.0**	**12.0**	**2.0**	**-1.8**	**12.2**	
102	**2465.42500**	**0.55**	**1.0**	**12.0**	**2.0**	**-1.8**	**12.2**	
103	2465.47500	0.60	1.0	12.0	2.0	-2.3	11.7	22
104	2465.52500	0.65	1.0	12.0	2.0	-2.7	11.3	4
105	2465.57500	0.70	1.0	12.0	2.0	-2.5	11.5	12

Test Point	Jammer Signal Freq. +/- Fc (MHz)	Jammer Signal Freq. +/- Fc (MHz)	(BER) (DQPSK) x10-5	(S/N)o (dB)	System Loss Lsys (dB)	Jammer to Signal Ratio Mj (dB)	Measured Processing Gain (dB)	Discarded Readings
106	2465.62500	0.75	1.0	12.0	2.0	-2.2	11.8	23
107	2465.67500	0.80	1.0	12.0	2.0	-2.2	11.8	24
108	2465.72500	0.85	1.0	12.0	2.0	-1.5	12.5	
109	2465.77500	0.90	1.0	12.0	2.0	-1.4	12.6	
110	2465.82500	0.95	1.0	12.0	2.0	-1.1	12.9	
111	2465.87500	1.00	1.0	12.0	2.0	-1.2	12.8	
112	**2465.92500**	**1.05**	**1.0**	**12.0**	**2.0**	**-1.8**	**12.2**	
113	**2465.97500**	**1.10**	**1.0**	**12.0**	**2.0**	**-1.8**	**12.2**	
114	**2466.02500**	**1.15**	**1.0**	**12.0**	**2.0**	**-1.8**	**12.2**	
115	2466.07500	1.20	1.0	12.0	2.0	-2.0	12.0	29
116	2466.12500	1.25	1.0	12.0	2.0	-2.0	12.0	30
117	2466.17500	1.30	1.0	12.0	2.0	-1.3	12.7	
118	2466.22500	1.35	1.0	12.0	2.0	-1.1	12.9	
119	2466.27500	1.40	1.0	12.0	2.0	-0.7	13.3	
120	2466.32500	1.45	1.0	12.0	2.0	-1.0	13.0	
121	2466.37500	1.50	1.0	12.0	2.0	-1.3	12.7	
122	2466.42500	1.55	1.0	12.0	2.0	-1.3	12.7	
123	2466.47500	1.60	1.0	12.0	2.0	-1.3	12.7	
124	2466.52500	1.65	1.0	12.0	2.0	-1.3	12.7	
125	2466.57500	1.70	1.0	12.0	2.0	-0.4	13.6	
126	2466.62500	1.75	1.0	12.0	2.0	-0.2	13.8	
127	2466.67500	1.80	1.0	12.0	2.0	0.0	14.0	
128	2466.72500	1.85	1.0	12.0	2.0	-0.1	13.9	
129	2466.77500	1.90	1.0	12.0	2.0	-0.1	13.9	
130	2466.82500	1.95	1.0	12.0	2.0	-0.4	13.6	
131	2466.87500	2.00	1.0	12.0	2.0	-0.1	13.9	
132	2466.92500	2.05	1.0	12.0	2.0	0.7	14.7	
133	2466.97500	2.10	1.0	12.0	2.0	1.6	15.6	
134	2467.02500	2.15	1.0	12.0	2.0	1.7	15.7	
135	2467.07500	2.20	1.0	12.0	2.0	1.7	15.7	
136	2467.12500	2.25	1.0	12.0	2.0	1.8	15.8	
137	2467.17500	2.30	1.0	12.0	2.0	1.9	15.9	
138	2467.22500	2.35	1.0	12.0	2.0	2.1	16.1	
139	2467.27500	2.40	1.0	12.0	2.0	1.9	15.9	
140	2467.32500	2.45	1.0	12.0	2.0	1.7	15.7	
141	2467.37500	2.50	1.0	12.0	2.0	1.6	15.6	
142	2467.42500	2.55	1.0	12.0	2.0	1.5	15.5	
143	2467.47500	2.60	1.0	12.0	2.0	1.9	15.9	
144	2467.52500	2.65	1.0	12.0	2.0	2.3	16.3	
145	2467.57500	2.70	1.0	12.0	2.0	2.6	16.6	
146	2467.62500	2.75	1.0	12.0	2.0	2.8	16.8	

Test Point	Jammer Signal Freq. +/- Fc (MHz)	Jammer Signal Freq. +/- Fc (MHz)	(BER) (DQPSK) x10-5	(S/N)o (dB)	System Loss Lsys (dB)	Jammer to Signal Ratio Mj (dB)	Measured Processing Gain (dB)	Discarded Readings
147	2467.67500	2.80	1.0	12.0	2.0	2.9	16.9	
148	2467.72500	2.85	1.0	12.0	2.0	2.9	16.9	
149	2467.77500	2.90	1.0	12.0	2.0	3.0	17.0	
150	2467.82500	2.95	1.0	12.0	2.0	3.0	17.0	
151	2467.87500	3.00	1.0	12.0	2.0	3.3	17.3	
152	2467.92500	3.05	1.0	12.0	2.0	3.7	17.7	
153	2467.97500	3.10	1.0	12.0	2.0	3.7	17.7	
154	2468.02500	3.15	1.0	12.0	2.0	3.9	17.9	
155	2468.07500	3.20	1.0	12.0	2.0	4.0	18.0	
156	2468.12500	3.25	1.0	12.0	2.0	4.0	18.0	
157	2468.17500	3.30	1.0	12.0	2.0	4.5	18.5	
158	2468.22500	3.35	1.0	12.0	2.0	4.5	18.5	
159	2468.27500	3.40	1.0	12.0	2.0	4.5	18.5	
160	2468.32500	3.45	1.0	12.0	2.0	4.8	18.8	
161	2468.37500	3.50	1.0	12.0	2.0	4.8	18.8	
162	2468.42500	3.55	1.0	12.0	2.0	4.8	18.8	
163	2468.47500	3.60	1.0	12.0	2.0	5.0	19.0	
164	2468.52500	3.65	1.0	12.0	2.0	5.4	19.4	
165	2468.57500	3.70	1.0	12.0	2.0	5.6	19.6	
166	2468.62500	3.75	1.0	12.0	2.0	5.7	19.7	
167	2468.67500	3.80	1.0	12.0	2.0	5.8	19.8	
168	2468.72500	3.85	1.0	12.0	2.0	6.1	20.1	
169	2468.77500	3.90	1.0	12.0	2.0	6.1	20.1	
170	2468.82500	3.95	1.0	12.0	2.0	6.2	20.2	
171	2468.87500	4.00	1.0	12.0	2.0	6.3	20.3	
172	2468.92500	4.05	1.0	12.0	2.0	6.9	20.9	
173	2468.97500	4.10	1.0	12.0	2.0	6.9	20.9	
174	2469.02500	4.15	1.0	12.0	2.0	7.1	21.1	
175	2469.07500	4.20	1.0	12.0	2.0	7.3	21.3	
176	2469.12500	4.25	1.0	12.0	2.0	7.3	21.3	
177	2469.17500	4.30	1.0	12.0	2.0	7.7	21.7	
178	2469.22500	4.35	1.0	12.0	2.0	7.9	21.9	
179	2469.27500	4.40	1.0	12.0	2.0	7.9	21.9	
180	2469.32500	4.45	1.0	12.0	2.0	8.0	22.0	
181	2469.37500	4.50	1.0	12.0	2.0	8.0	22.0	

Appendix 1

The following is a Matlab program which plots the DQPSK probability of error vs. Eb/No. This was derived using a formula from the following reference:

Feher, Kamilo: *Wireless Digital Communications: Modulation and Spread Spectrum Applications*, Prentice Hall, Upper Saddle River, New Jersey, 1995, pp211-213

Matlab Code

```
function [SNR,BER]=berdqpsk(K)

%this is an m-file to calculate the ber of a
%dqpsk system. The Eb/N ranges from 0 to 14 dB
%The formula used is on page 212 of Dr. Feher's
%book, "Wireless Digital Communications"
%K is the number of sums in the Q function

SNR=0:0.1:13;
GAMMA=10.^(SNR/10);
A=sqrt(2*GAMMA*(1-1/sqrt(2)));
B=sqrt(2*GAMMA*(1+1/sqrt(2)));
Q=zeros(size(SNR));
for k=0:K
   Q=Q+(A./B).^(k).*besseli(k,A.*B);
end
BER=exp(-(A.^2+B.^2)/2).*(Q-besseli(0,A.*B)/2);
semilogy(SNR,BER);
```

IN

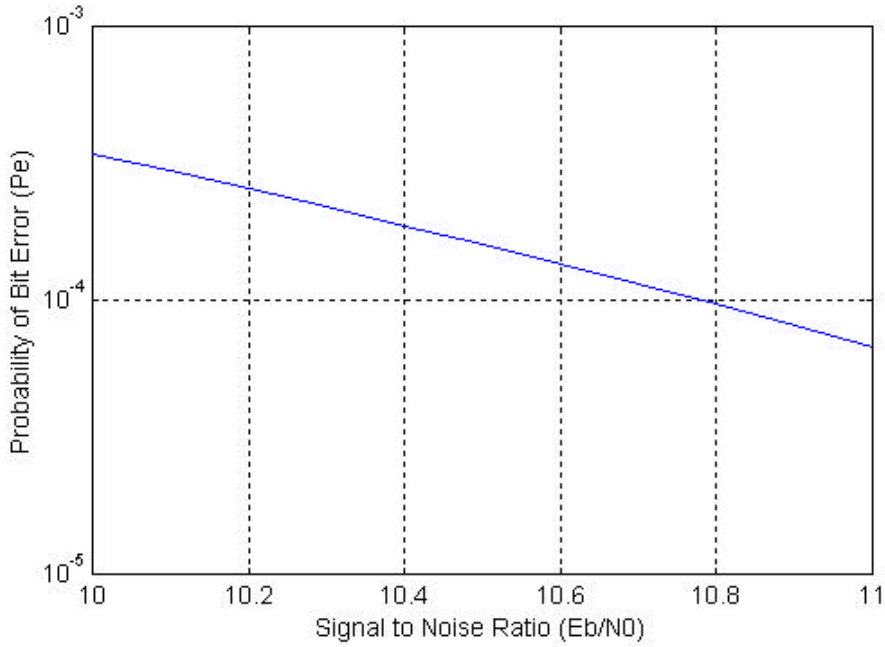
10^{-3}
10^{-4}
10^{-5}
Probability of Bit Error (Pe)
10
10.2
10.4
10.6
10.8
11
Signal to Noise Ratio (Eb/N0)

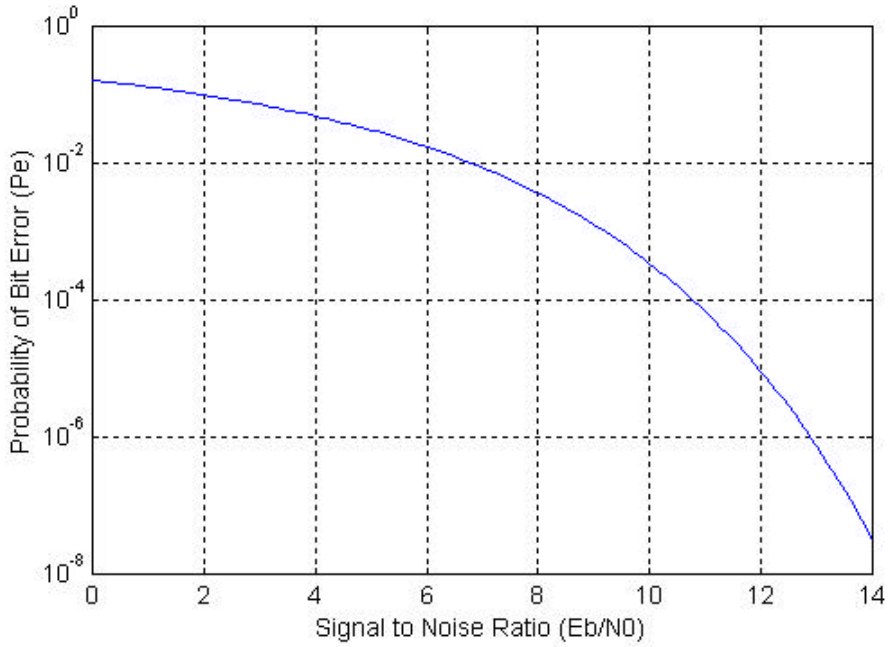
10^{0}
10^{-2}
10^{-4}
10^{-6}
10^{-8}
Probability of Bit Error (Pe)
0
2
4
6
8
10
12
14
Signal to Noise Ratio (Eb/N0)

Appendix 2

The receiver has two IF filter bandwidths. A signal generator was used to sweep the receiver RF input and the IF output was measured. Measurements were made on two different channels with the two bandwidths. The following plot was made from the test data. The plot represents the IF filter bandwidths of the receiver. The 6 dB bandwidth is 17 MHz in wideband mode and 9 MHz in narrowband mode.

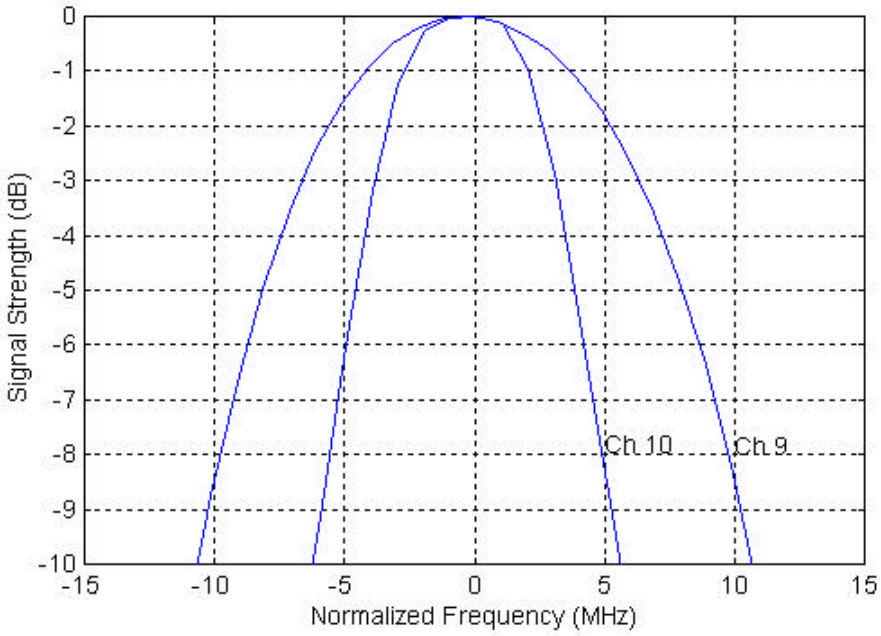

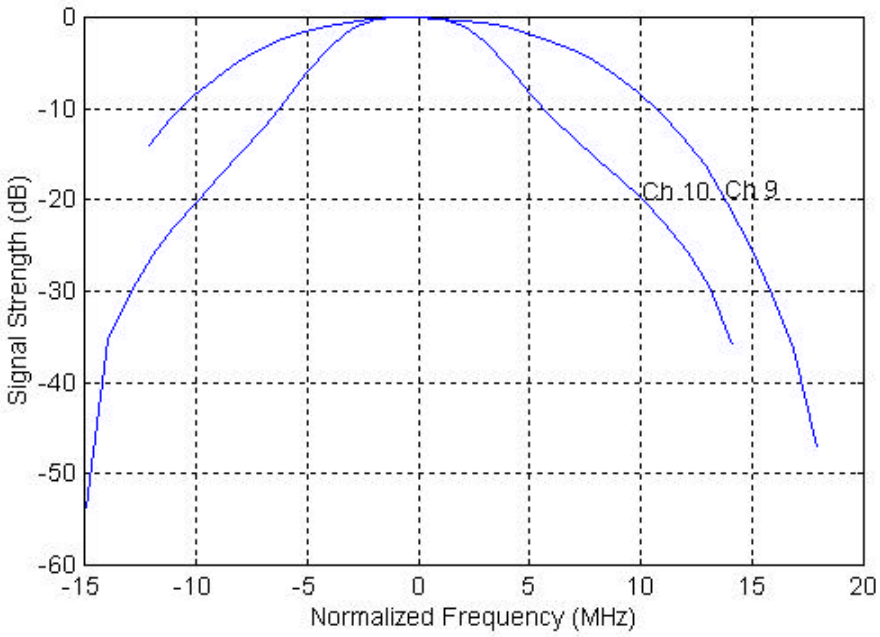
0
-10
-20
-30
-40
-50
-60
Signal Strength (dB)
-15
-10
-5
0
5
10
15
20
Normalized Frequency (MHz)
Ch 10
Ch 9