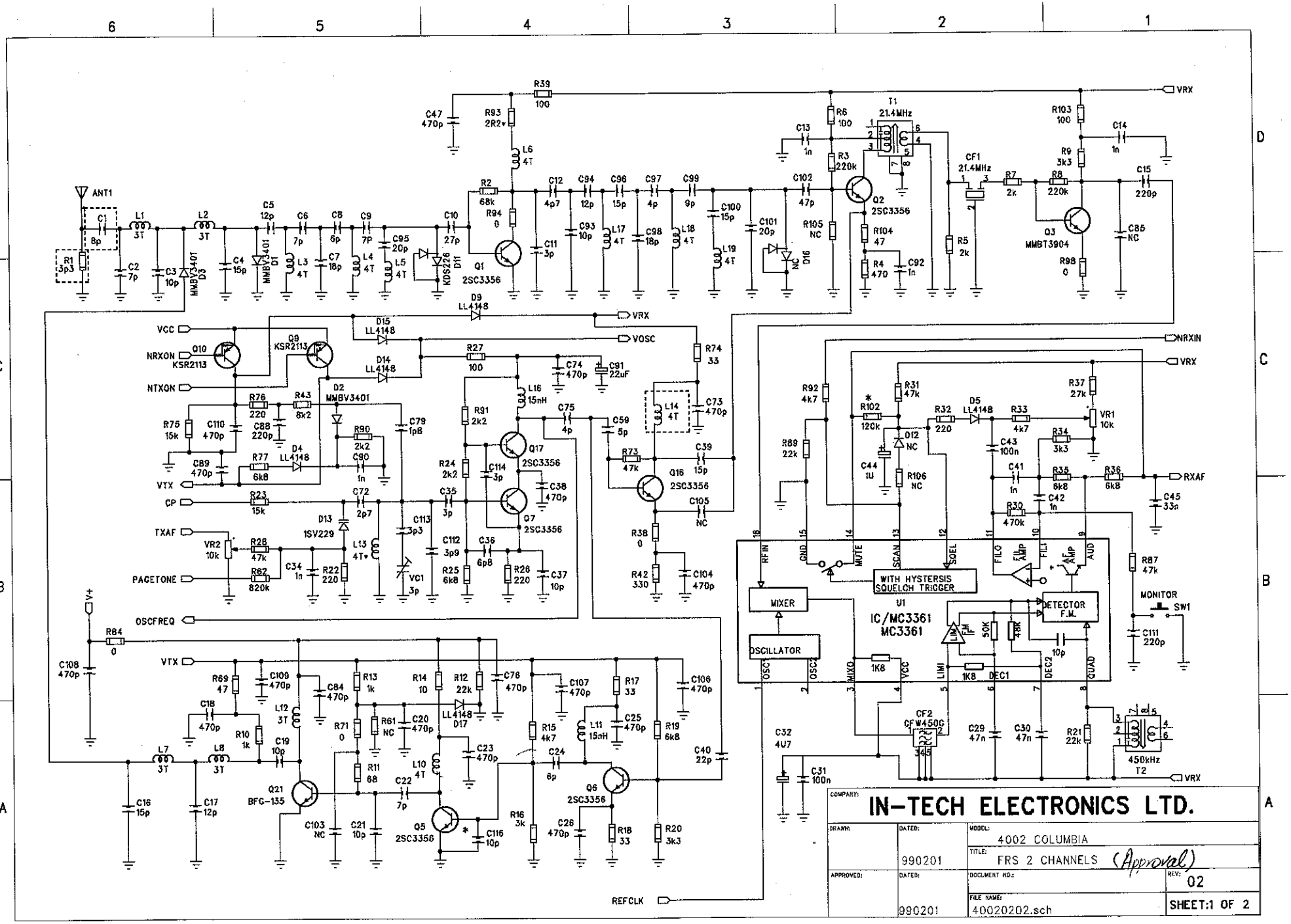
ANT1
VRX
VOSC
NRXIN
RXAF
VCC
NRXON
NTXON
VTX
CP
TXAF
PAGETONE
OSCFREQ
REFCLK
V+
MONITOR
SW1
IC/MC3361
MC3361
U1
WITH HYSTERSIS SQUELCH TRIGGER
MIXER
OSCILLATOR
DETECTOR F.M.
450kHz
T2
T1
21.4MHz
CF1
21.4MHz
CF2
CFW450G
Q1 2SC3356
Q2 2SC3356
Q3 MMBT3904
Q5 2SC3356
Q6 2SC3356
Q7 2SC3356
Q16 2SC3356
Q17 2SC3356
Q21 BFG-135
Q10 KSR2113
Q9 KSR2113
D2 MMBV3401
D3 MMBV3401
D1 MMBV3401
D11 KDS226
D9 LL4148
D15 LL4148
D14 LL4148
D4 LL4148
D5 LL4148
D17 LL4148
D13 1SV229
D12 NC
D16 NC
VR1 10k
VR2 10k
COMPANY: IN-TECH ELECTRONICS LTD.
DRAWN:
DATED: 990201
MODEL: 4002 COLUMBIA
TITLE: FRS 2 CHANNELS (Approval)
APPROVED:
DATED: 990201
DOCUMENT NO.:
REV: 02
FILE NAME: 40020202.sch
SHEET:1 OF 2

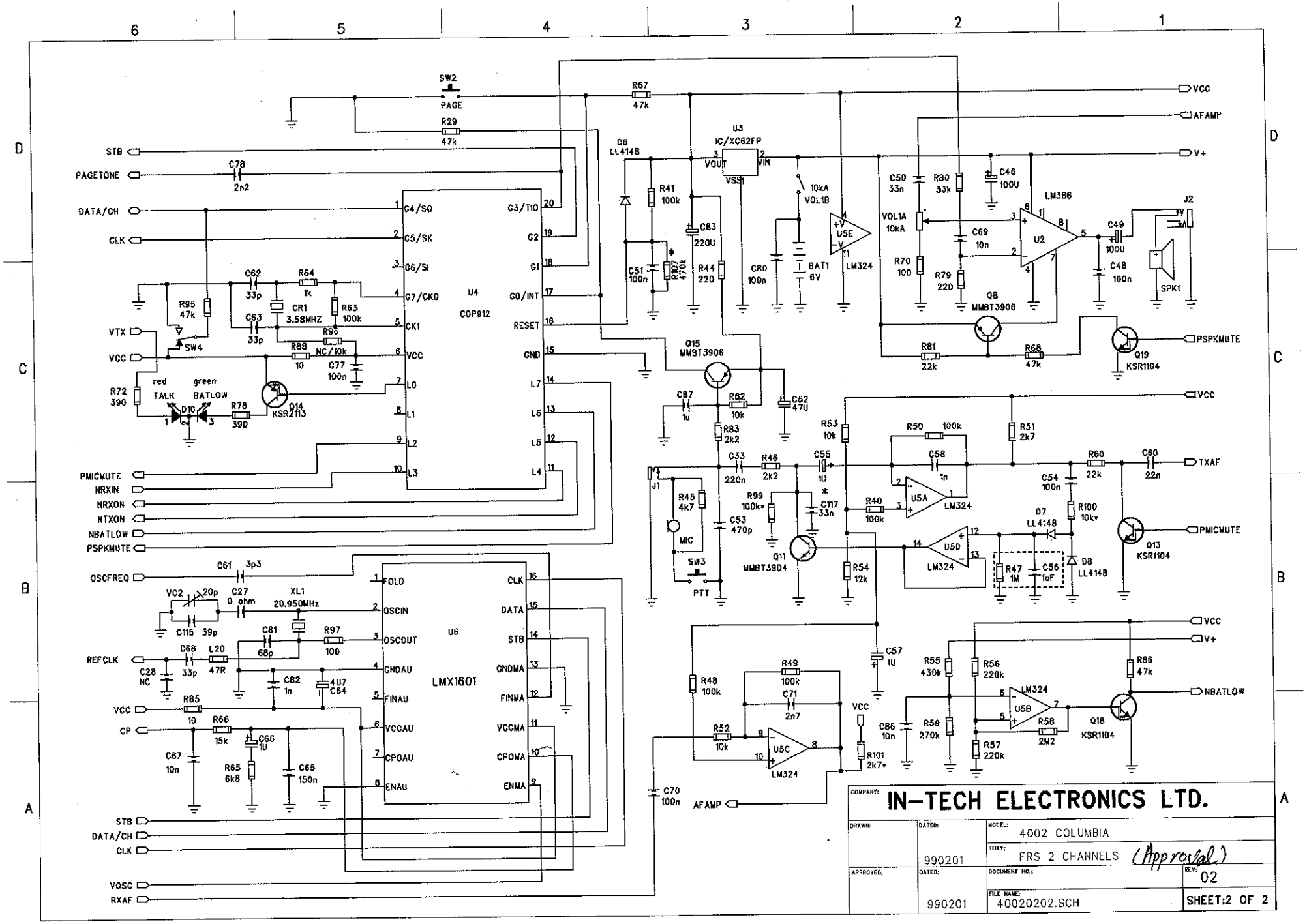
SW2
PAGE
R29
47k
R67
47k
VCC
AFAMP
V+
STB
PAGETONE
C78
2n2
DATA/CH
CLK
U4
COP912
G4/SO
G5/SK
G6/SI
G7/CKO
CK1
VCC
L0
L1
L2
L3
G3/TIO
G2
G1
G0/INT
RESET
GND
L7
L6
L5
L4
C62
33p
R64
1k
CR1
3.58MHZ
R63
100k
C63
33p
R96
NC/10k
R88
10
C77
100n
R95
47k
SW4
VTX
VCC
R72
390
red
TALK
green
BATLOW
D10
R78
390
Q14
KSR2113
PMICMUTE
NRXIN
NRXON
NTXON
NBATLOW
PSPKMUTE
OSCFREQ
C61
3p3
VC2
20p
C115
39p
C27
0 ohm
XL1
20.950MHz
C81
68p
R97
100
REFCLK
C68
33p
L20
47R
C28
NC
C82
1n
4U7
C64
U6
LMX1601
FOLD
OSCIN
OSCOUT
GNDAU
FINAU
VCCAU
CPOAU
ENAU
CLK
DATA
STB
GNDMA
FINMA
VCCMA
CPOMA
ENMA
VCC
R85
10
CP
R66
15k
C66
1U
C67
10n
R65
6k8
C65
150n
STB
DATA/CH
CLK
VOSC
RXAF
D6
LL414B
R41
100k
C51
100n
R107
470k
C83
220U
R44
220
U3
IC/XC62FP
VOUT
VIN
VSS
C80
100n
10kA
VOL1B
BAT1
6V
U5E
LM324
C50
33n
R80
33k
C46
100U
VOL1A
10kA
C69
10n
R70
100
R79
220
LM386
U2
C49
100U
C48
100n
J2
SPK1
Q8
MMBT3906
R81
22k
R68
47k
Q19
KSR1104
PSPKMUTE
Q15
MMBT3906
C87
1u
R82
10k
C52
47U
R83
2k2
R53
10k
R50
100k
R51
2k7
C33
220n
R46
2k2
C55
1U
C58
1n
R60
22k
C60
22n
TXAF
J1
R45
4k7
MIC
SW3
PTT
C53
470p
R99
100k
C117
33n
Q11
MMBT3904
R40
100k
U5A
LM324
C54
100n
R100
10k
D7
LL4148
U5D
LM324
R47
1M
C56
1uF
D8
LL4148
Q13
KSR1104
PMICMUTE
R54
12k
C57
1U
R48
100k
R49
100k
C71
2n7
R52
10k
U5C
LM324
R101
2k7
C70
100n
AFAMP
R55
430k
R56
220k
R86
47k
LM324
U5B
C86
10n
R59
270k
R57
220k
R58
2M2
Q18
KSR1104
NBATLOW
COMPANY:
IN-TECH ELECTRONICS LTD.
DRAWN:
DATED:
990201
MODEL:
4002 COLUMBIA
TITLE:
FRS 2 CHANNELS (Approval)
APPROVED:
DATED:
990201
DOCUMENT NO.:
REV:
02
FILE NAME:
40020202.SCH
SHEET:2 OF 2