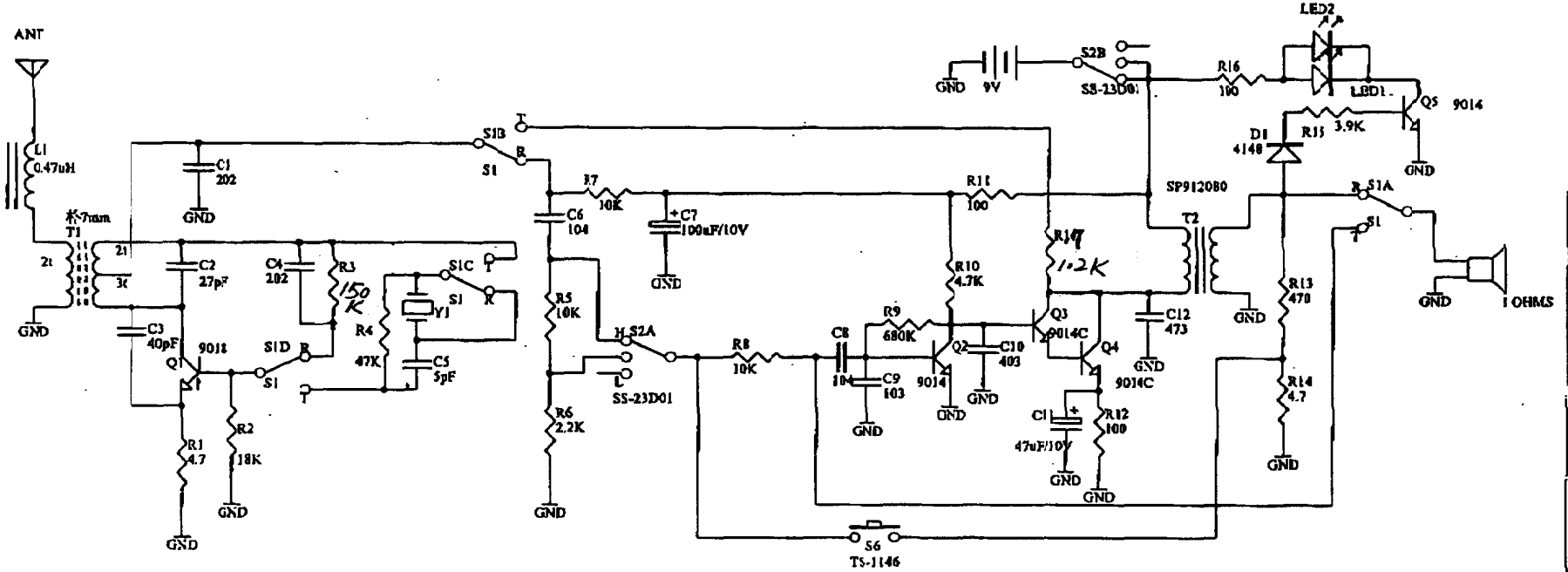

14-MAY-2004

Title	49MHz WALKIE TALKIE	
Size B	Number	Revision V1a
Date: 24-Apr-2004		Sheet of
File: C:\Share folder\..\RL-5300.Sch		Drawn By: