BEYOND SECURITY

KABA®

Kaba compact reader 91 04 - subterminal

Technical Manual

04044346 - 07/2014

EN

© Copyright by

Kaba GmbH
Albertistraße 3
D-78056 Villingen-Schwenningen
Phone +49 7720/603-0
Fax +49 7720/603-102

www.kaba.com/workforce-management

All rights reserved. The document and its parts are copyrighted. Only Kaba GmbH has the right to commercialize, market and distribute this document. This document, or any part of it, may not be copied or reproduced, adapted, arranged, reworked or modified without the prior consent of Kaba GmbH.

All company, trademark or product names are trademarks or registered trademarks of their respective owners and are protected.

Subject to technical changes without notice!

Order no. 04044346 - 07/2014

1 About this manual 5

2 Grouped safety messages 7

2.1 Use as directed 7
2.2 Mounting and Installation 7
2.3 Service and Maintenance 7
2.4 ESD (electrostatic discharge) protective measures 8

3 Product description 9

3.1 Technical data 10
3.1.1 Interfaces 10
3.1.2 Power supply 10
3.1.3 Reader 10
3.1.4 Inputs / Outputs 10
3.1.5 Umgebungsbedingungen 11
3.1.6 Dimensions 11
3.2 Conformity 12
3.3 Labeling 13
3.4 Device variants 14
3.4.1 RFID reader 14
3.4.2 Design 14
3.5 Terminal software 14
3.6 Device structure 15
3.7 System connection 16
3.8 System requirements 17
3.9 Supported features 17
3.10 Operating sequence 18
3.10.1 Badge input 18
3.10.2 Valid booking 18
3.10.3 Invalid booking 18

4 Installation 19

4.1 Installation conditions 19
4.1.1 General 19
4.1.2 Installation site 19
4.1.3 Connections 19
4.2 Installation diagram 20
4.3 Installation lines 21
4.3.1 Power supply cable 21
4.3.2 Data line 21
4.3.3 Line to the door opener and door contacts 21
4.4 Fastening the base frame 22
4.5 Connections 23
4.5.1 Compact reader 91 04 with plug-in terminal clamp 23
4.5.2 Compact reader 91 04 with permanently connected connecting cable 24
4.5.3 Note on the use of door openers 24
4.6 Setting the switches 25
4.6.1 DIP switch 25
4.6.2 Rotary switch 27
4.7 Final assembly 28
4.8 Dismounting 29

5 Start-up 30

5.1 Set-up procedure 30
5.2 Cold start 30

6 System mode 31

6.1 Function of the system mode 31
6.2 Access to the system mode 31
6.3 Starting the system mode 31
6.4 Terminating the system mode 32
6.5 Commands 32
6.5.1 SETHWC 33
6.5.2 GETHWC 35
6.5.3 GETPRG 35
6.5.4 GETKVS 35
6.5.5 RUN 35
6.5.6 COLD 36
6.5.7 ORIGIN 36
6.5.8 LOWPAR 37
6.5.9 GETDGN 38
6.5.10 RSTDGN 38

7 Description of the subpartyline 39

7.1 BPA/9 Subset 39
7.2 Addressing 39
7.3 Control characters and control sequences 40
7.4 Data records 40
7.5 Data from subterminal to control unit 41
7.6 Data from the control unit to the subterminal 42
7.7 Escape sequences 43
7.7.1 Controlling LED, relay and beeper 43
7.7.2 Reset 44
7.7.3 Device configuration 44
7.7.4 Program number 45
7.7.5 Recorded data 45
7.7.6 Hex representation of the recorded data 45
7.7.7 Acoustic acknowledgement for reading 46
7.7.8 Digital inputs 46

8 Maintenance 47

8.1 Updating terminal software 47
8.1.1 Programming interface 47
8.1.2 Equipment 47
8.1.3 Procedure 48

9 Packaging / returns 49

9.1 Complete devices 49
9.2 Electronic assemblies 49
9.3 Labeling 50

10 Disposal 51

11 Index 52

1 About this manual

Validity This manual describes the **Kaba compact reader 91 04** as of

Manufacturing date:	April 2014
Terminal software:	ARCC01_05RA (LEGIC) MRCC01_08RA (MIFARE)
Functional type:	Subterminal

Addressees This manual is written exclusively for specialists.

The descriptions in this manual are intended for personnel trained by the manufacturer. The information in this manual cannot substitute the product training.

The contents of this manual is intended for use by the following groups of people:

- **Project manager**

  Project manager who is responsible for the system and entrusted with project planning and realization.

- **Fitter**

  Person specialized in mounting and installation.

  Person who has an adequate technical training and sufficient experience and who has been authorized by the manufacturer after completing the training on the product.

- **Service technician**

  Specialist for initial set-up and maintenance of the installation.

  Person who has an adequate technical training and sufficient experience and who has been authorized by the manufacturer after completing the training on the product.

- **Network administrator**

  Realizes the set-up of the device within the network and makes sure that the devices are accessible within the network.

- **Software partner**

  Specialists for connecting the system to the user software by defining operating and booking sequences, programming the customer applications and setting the parameters of the devices.

Important!

For reasons of device safety, some of the activities might only be carried out by the SERVICE PERSON.

Only persons of the groups "Fitter" and "Service technician" have the status of a SERVICE PERSON according to DIN EN 60950-1:2006.

Contents and purpose

The contents is limited to the assembly, installation, start-up, and basic operation of the hardware.

Orientation in the manual

This manual contains the following orientation aids to facilitate finding of specific topics:

- The table of contents at the beginning of the manual gives an overview of all topics.
- The header always contains the respective main chapter.
- An index in the alphabetical order is given at the end of the manual.

Danger categories

Remarks with specifications or rules and restrictions to prevent injuries and property damage are particularly marked.

Please read the danger warnings and user tips carefully. This information will help prevent accidents and damage to your equipment.

Danger warnings are divided into the following categories.

CAUTION

Describes a possibly dangerous situation that can lead to minor injuries.

NOTICE!

Important information for proper handling of the product.

Ignoring this information can cause device malfunction and the device or something near it can get damaged.

Symbols

Depending on the source of danger, warnings are marked with symbols of the following meaning.

	General danger		Danger for electronic components due to electrostatic discharge

Remarks

Please pay special attention to the remarks that are marked with symbols.

Tips and useful information.

This information will help you to best use the product and its functionality.

2 Grouped safety messages

The device has been built in accordance with state-of-the-art standards and the recognized safety rules. Nevertheless, its use may constitute a risk to persons and cause damage to material property.

Read and observe the following safety instructions, before using the product.

2.1 Use as directed

The device or system is only intended for usage as described in chapter "Product description."

Any use beyond the designated use is not according to rules. The manufacturer is not responsible for damages resulting from improper use. The user/operator is responsible for any risks associated with non-duly use.

2.2 Mounting and Installation

Mounting and installation may only be carried out by the SERVICE PERSON (see chapter 1 / Addressees).

Installation may only be carried out in places that fulfill climatic and technical conditions stated by the manufacturer.

Kaba GmbH is not liable for damages resulting from improper handling or incorrect installation.

2.3 Service and Maintenance

Maintenance work / troubleshooting

Only the SERVICE PERSON (see chapter 1 / Addressees) is entitled to remove faults and carry out the maintenance work.

Reconstruction and modification

Any reconstruction and modification of the device may only be realized by the SERVICE PERSON (see chapter 1 / Addressees). All reconstructions and modifications carried out by unauthorized personnel shall render void any liability.

2.4 ESD (electrostatic discharge) protective measures

NOTICE!

Danger for electronic components due to electrostatic discharge.

Improper handling of printed circuit boards or components can cause damages that lead to complete failures or sporadic errors.

- During installation and repair of the device, the ESD protective measures must be considered.

The following rules must be considered:

- Wear an ESD wristband when handling electronic components.

  Connect the end of the wristband to a discharge socket or an unvarnished grounded metal component. This way, static charges are discharged from your body securely and effectively.
- Touch only the edges of circuit boards. Do not touch the circuit board nor the connector.
- Place all dismantled components on an antistatic surface or in an antistatic container.
- Avoid contact between circuit boards and clothing. The wristband only protects the printed circuit boards against electrostatic discharge from your body, but there is still a risk of damage through electrostatic discharge from your clothing.
- Transport and dispatch dismantled modules only in electrostatically shielded protective bags.

3 Product description

The Kaba compact reader 91 04 has been designed as subterminal for use at a time and attendance terminal or an access control manager.

The Kaba compact reader 91 04 is installed in an ergonomically suitable position in secured areas, e.g., in the access area (door).

The integrated RFID reader allows contact-free reading and writing of RFID media in MIFARE or LEGIC technology (depending on the version).

Communication with the superior access control system or the time and attendance terminal is performed in the "Online" operating mode via the RS-485 subpartyline.

Depending on settings of the superior control system *Access*, *IN* or *OUT* booking operations are possible.

The device has 2 digital inputs that can be used in combination with an access control, e.g., for door frame contact or door-opener. The built-in relay can be used for door opening in secure areas.

The compact reader is equipped with a light icon (red/green) and a buzzer for optical and acoustic signaling.

3.1 Technical data

3.1.1 Interfaces

RS-485

RS-485 2-wire subpartyline for communication with the superior access control system unit or a time and attendance terminal.

- Protocol: BPA/9 Subset.
- Automatic baud rate detection; 9600 / 19200 Baud.
- 7 data bits, even parity, 1 stop bit.

Programming interface

For terminal software update.

3.1.2 Power supply

- Voltage range: 12 – 27 V AC; 10 – 34 V DC
- Power consumption: Typically 1.2 W; max. 2.2 W

3.1.3 Reader

MIFARE version

- RFID standard: ISO 14443A
- Badge media supported:
  - MIFARE DESfire
  - MIFARE Classic

LEGIC version

- RFID standard: ISO 14443A, ISO 15693, LEGIC RF
- Badge media supported:
  - LEGIC advant
  - LEGIC prime

3.1.4 Inputs / Outputs

1 relay output

- One potential-free changeover contact.
- Contact loading capacity: 30 V AC / DC; max. 2 A.

2 digital inputs

- With integrated power supply and common ground to connect potential-free contacts.
- Input voltage: max. 5 V DC.

3.1.5 Umgebungsbedingungen

- Ingress protection according to IEC 60529:
  - IP54 (device variant with plug-in terminal clamp)
  - IP66 (device variant with permanently connected connecting cable)
- Relative humidity:
  - 5% to 95%, non-condensing
- Ambient temperature:
  - -25 °C – +70 °C (operation)
  - -40 °C – +85 °C (storage)

3.1.6 Dimensions

Dimensional drawing compact reader 91 04, dimensions in mm

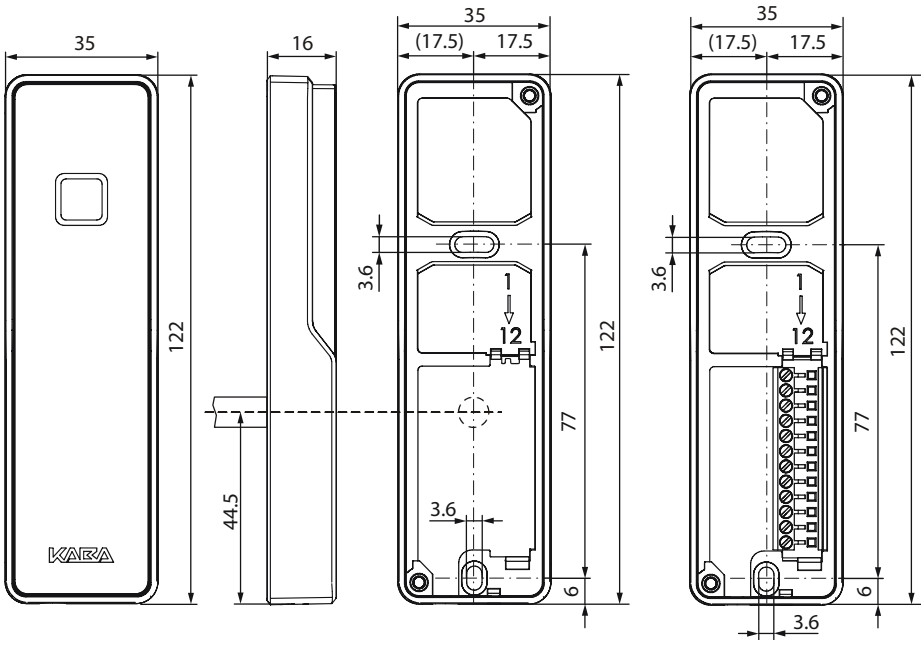

Outer dimensions Back housing IP66 Back housing IP54

3.2 Conformity

This device complies with the following standards:

EN 60950-1:2006 + A11:2009

EN 301 489-1 V1.8.1

EN 301 489-3 V1.4.1

EN 300 330-1 V1.7.1

EN 300 330-2 V1.5.1

according to the regulations of the EU Directives

2006/95/EG	Low voltage directive
1999/5/EG	R&TTE Directive
2004/108/EG	EMC Directive

RoHS This device is in conformity with Directive **2011/65/EU** of the European Parliament and of the Council of 8 June 2011 on the restriction of the use of certain hazardous substances in electrical and electronic equipment.

In addition, the product also conforms to the following standards:

UL 60950-1

UL 294

The components shall be supplied by a limited power source according to chapter 2.5 of IEC 60950-1. When installing/inserting the components in end-use equipment/system all requirements of the mentioned test standards must be fulfilled.

The external power supply unit shall be in accordance to UL 294. The secondary output shall fulfill the requirements for class 2 or class 3 outputs.

UL 294 Security Level 1

FCC ID NVI-KCR9104-L1

This device complies with part 15 of the FCC Rules. Operation is subject to the following two conditions:

- This device may not cause harmful interference
- This device must accept any interference received, including interference that may cause undesired operation.

Any changes or modifications not expressly approved by the party responsible for compliance could void the user's authority to operate the equipment.

3.3 Labeling

The identification plate is located on the rear of the device.

Specified on the identification plate:

- Device name
- Product number
- Serial number
- Power data
- CE identification
- WEEE labeling acc. to DIN EN 50419

3.4 Device variants

3.4.1 RFID reader

The compact reader 91 04 is available with the following RFID reader types:

- MIFARE
- LEGIC

3.4.2 Design

The device is available in two designs:

- With permanently connected connecting cable (IP66 version).
- With plug-in terminal clamp (IP54 version).

3.5 Terminal software

The hardware of the Kaba compact reader 91 04 is used in various Kaba system solutions. Type of use and functions of the device are determined by the software used:

This description of the Kaba compact reader 91 04 only refers to the terminal software for online operation as a subterminal.

Designation of the terminal software

The software designation has the following meaning:

Reader type	**M** **A**	MIFARE LEGIC
Device type	**RC**	Compact reader
Operating mode	**A** **B** **C**	Standalone Access manager Subterminal
Version number	**01.00**	Version
Addition 1	**R**	Released
Addition 2	**A**	Subversion
Addition 3	_	Reserve

Examples:

– MRCC01.08RA_ Terminal software for MIFARE compact reader.

– ARCC01.05RA_ Terminal software for LEGIC compact reader.

Labeling of the device

"Type: Subterminal" is written on the identification plate of devices using the terminal software for online operation as a subterminal.

3.6 Device structure

Compact reader 91 04 with permanently connected connecting cable (IP66 version)

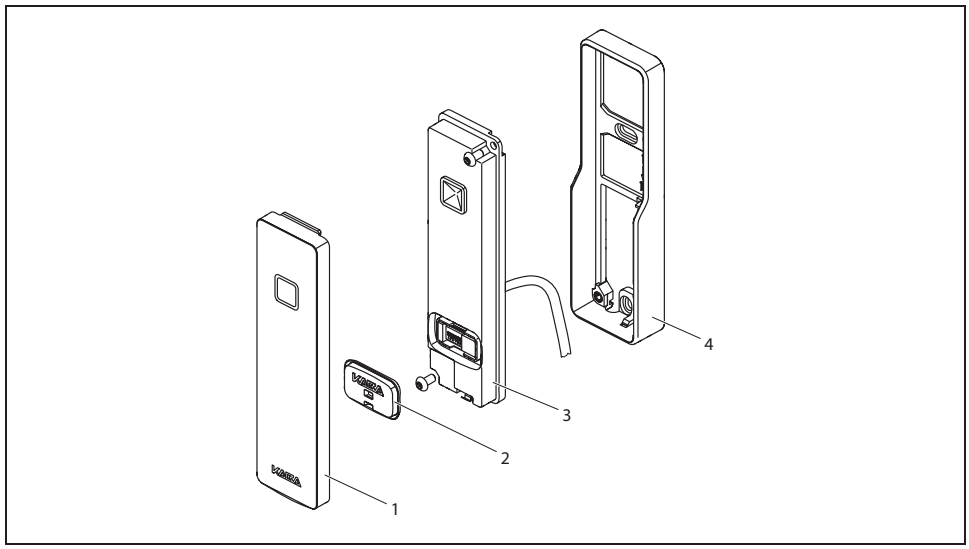

1 Front cover

2 Sealing plug for the DIP switch

3 Core device with electronics and permanently connected connecting cable length 3.5 m

4 Base frame

Compact reader 91 04 with plug-in terminal clamp (IP54 version)

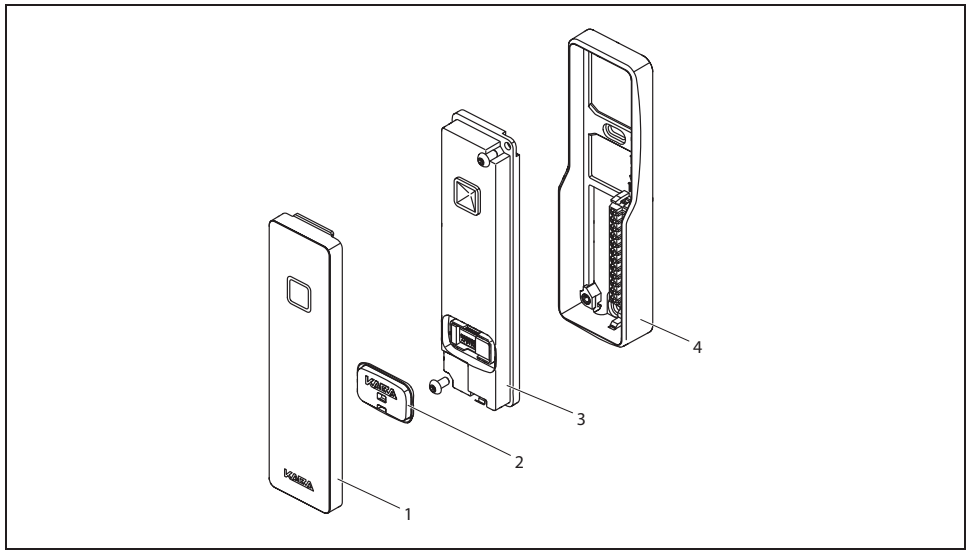

1 Front cover

2 Sealing plug for the DIP switch

3 Core device with electronics

4 Base frame with plug-in terminal clamp

3.7 System connection

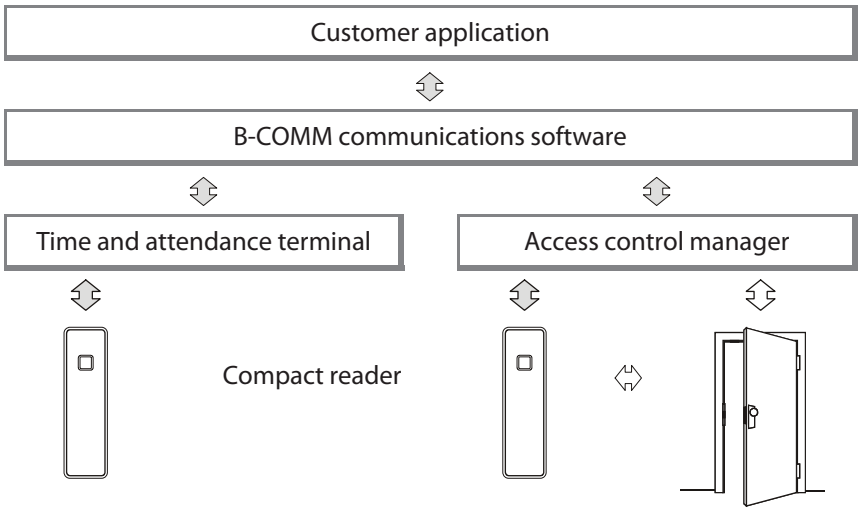

The compact reader operates as a subterminal of a superior time and attendance terminal or an access control system, which control system in the following text.

Data exchange takes place via the RS-485 interface (subpartyline). Communication takes place via the transmission protocol BPA/9 subset.

Once the subterminal has been switched on, it will be initialized. This process includes setting the parameters of the reader driver, thus defining the method for transferring badge data to the entry data record.

The subterminal can be used for *Access*, *IN*, or *OUT* booking operations.

The compact reader itself has no decision-making authority and is to be considered as a separate operating unit. Once a valid RFID medium (badge) is detected, a corresponding badge data record will be sent to the control system. The control system will decide whether a badge is authorized or not and return the respective commands for signaling (acoustic signal generator and luminous ring) and relay control to the subterminal.

The built-in relay can be used to trigger the door opener. The inputs may be used for door monitoring in combination with an access control system.

3.8 System requirements

Communication software

- B-COMM version 2.10 and higher

Control

- Terminal of the B-web 93 00 series with B-Client HR10 terminal software version 754-00-X-K02 and higher.
- B-Net 92 50 access control manager with B-Client AC2 terminal software version 664-03-X-K03 and higher.
- B-Net 92 90 access control manager with B-Client AC3 terminal software version 666-03-X-K03 and higher.
- B-Net 92 90-2 access control manager with B-Client AC3 terminal software version 668-00-X-K04 and higher.

3.9 Supported features

Depending on the system connection, the following functional elements are supported:

HR = B-web 93 00 time and attendance terminal with B-Client HR10 terminal software.

AC = Access control unit with B-Client AC2/3 terminal software.

	HR	AC
Inputs	-	X
Outputs	X	X
CardLink update	-	-
CardLink validation and invalidation	-	X
Distribution of site keys via download (ARIOS security concept)	X	-

3.10 Operating sequence

The exact operating sequence at the subterminal is defined by the parameters set for the superior control unit. The operating sequences described below correspond to the default settings.

3.10.1 Badge input

The luminous ring is green while the reader is in idle state. A booking operation is started by a badge input.

The contactless media are simply held in front of the terminal.

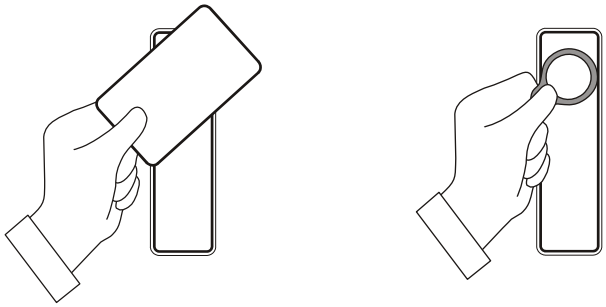

3.10.2 Valid booking

If the booking is valid, a short acoustic signal is emitted, and the luminous ring blinks once in green.

- short acoustic signal
- luminous ring blinks once

3.10.3 Invalid booking

If the booking is invalid, an alternating acoustic signal is emitted for about 5 seconds while the luminous ring is blinking in red.

- alternating acoustic signal
- luminous ring blinks in red

  Duration approx. 5 seconds

4 Installation

4.1 Installation conditions

4.1.1 General

An accurate installation of all components is a basic requirement for a properly functioning device. The following installation instructions must be adhered to.

4.1.2 Installation site

The compact reader is installed in an ergonomically suitable position, e.g., in the access area (door).

The compact reader is mounted directly on the wall or on the door frame.

In the device variant with permanently connected connecting cable, the cable must be led to the back into the wall.

In the device variant with plug-in terminal clamp, the cable feed can take place from behind (flush-mounted cable routing) or from below (surface-mounted cable routing).

Clearances

Between two compact readers, a distance of 20 cm must be observed on all sides.

Mounting height

Recommended mounting height 110 cm to top edge of the compact reader.

Electromagnetic fields

The device must not be installed in the area of strong electromagnetic fields caused by switching power supply, power lines, phase controllers, etc.!

Electromagnetic fields can affect the reading power or cause failures, in particular with contactless RFID readers.

4.1.3 Connections

The following connectors must be prearranged at the installation site.

- Power supply for the compact reader.
- Data line to the control unit.
- Signal lines to door openers and door contacts (if required).

4.2 Installation diagram

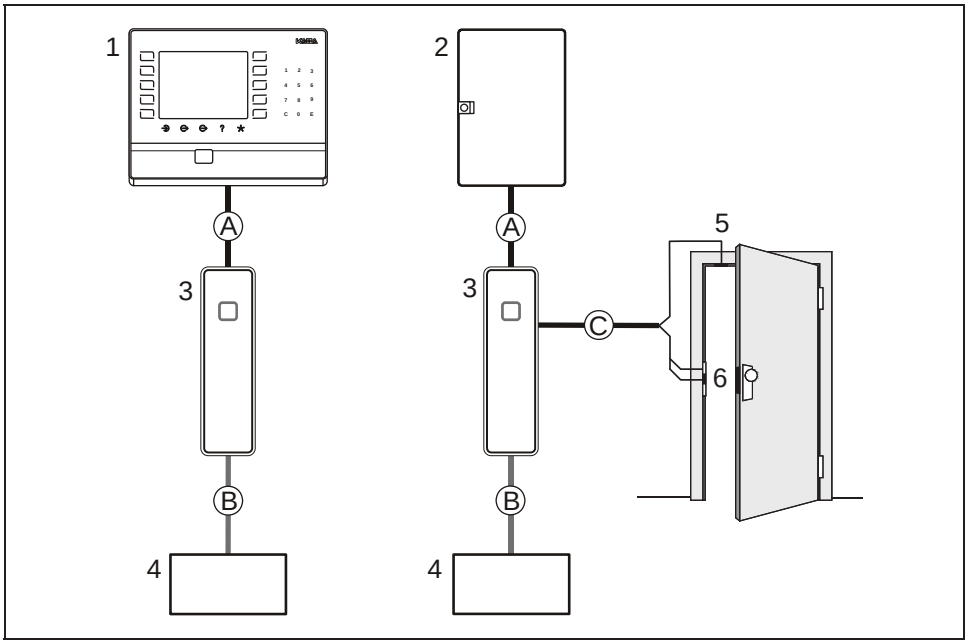

1 B-web 93 00 time and attendance terminal

2 access control manager

3 Compact reader 91 04

4 Power supply

5 Door frame contact

6 Door contact, door opener

Installation lines

A Data line

B Power supply cable

C Cable to the door opener and to the door contacts (if required)

In the example top right, the relay in the subterminal is used for door opening. This is only recommended in secure areas.

Alternatively, the door opening can take place via an internal relay of the terminal or of the access control manager.

4.3 Installation lines

4.3.1 Power supply cable

Power is normally supplied to the subterminal by the superior access control manger and can be tapped easily from there.

A separate power supply needs to be provided if the subterminal is connected to a B-web time and attendance terminal.

For distances up to 20 meters max., it is permitted to have the power supply for the subterminal and the data line in one single cable. A separate power supply cable needs to be provided for longer distances.

Recommended cable: 1 x 2 x 0.6 mm or 1 x 2 x AWG 24.

In case of long lines, the voltage drop - caused by the line resistance - must be considered.

4.3.2 Data line

The communication with the superior control unit is performed via the RS-485 2-wire subpartyline.

The complete bus network (master lines and stubs) may be up to 1,200 meters long. One stub must not exceed 100 m.

Line requirements: Shielded line with twisted wire pairs,
for instance standard telephone cable J-Y (St) Y 2 x 2 x 0.6 mm.

Recommended cable: CAT.5 S/UTP 4 x 2 AWG 24 or AWG 22 (according to EIA/TIA568).

4.3.3 Line to the door opener and door contacts

Line requirements: Cable diameters from 0.5 mm to 0.8 mm.

Recommended cable: CAT.5 S-UTP 4 x 2 AWG 24 or AWG 22 (according to EIA/TIA568) or higher.

4.4 Fastening the base frame

The base frame is mounted directly on the wall or on the door frame.

For fastening, two long holes (arrow) are provided in the base frame. Depending on the surface, screws/dowels or self-tapping screws are used for fastening.

For cable feed from behind, ensure correct position via hole or empty tube.

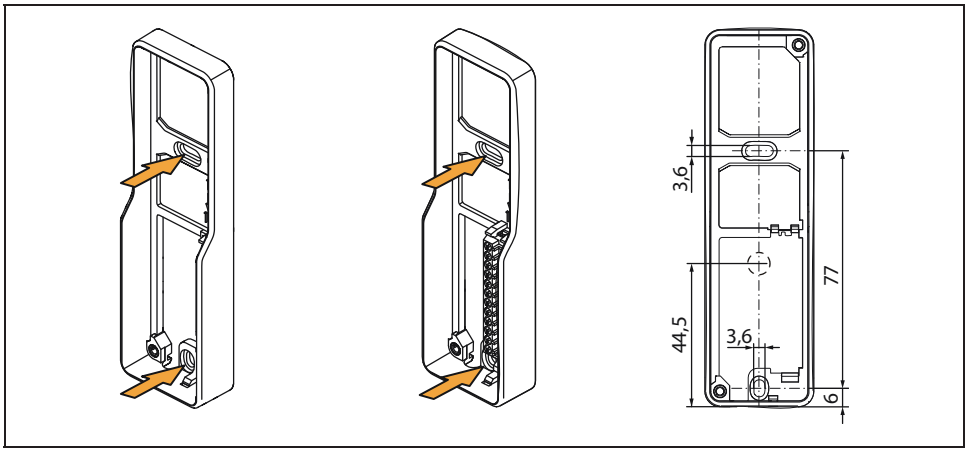

The base frame may not be mounted twisted. The screws may only be tightened slightly. The base frame may not be deformed or bent.

In the case of soft mounting surfaces, make sure that when installed, the base frame is not pressed into the mounting surface.

The unevenness of the mounting surface must be compensated for or adjusted by means of suitable measures (e.g. washers).

4.5 Connections

4.5.1 Compact reader 91 04 with plug-in terminal clamp

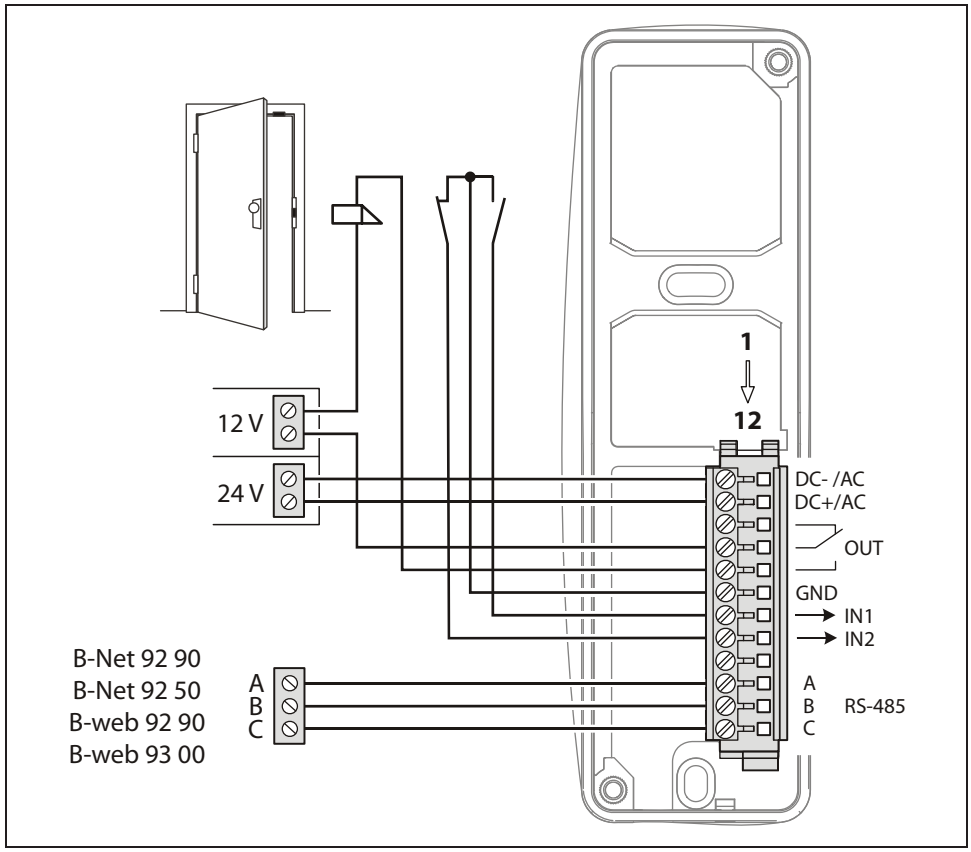

Terminal	Assignment	Description
1	DC- / AC	Power supply input 12 – 27 V AC; 10 – 34 V DC
2	DC+ / AC	
3	NC	Relay output, contact load 30 V AC/DC, max. 2 A.
4	COM	
5	NO	
6	GND	Digital inputs The inputs are connected to common ground using a simple switch or relay contact.
7	IN1	
8	IN2	
9	-	
10	A	RS-485 subpartyline, data interface to the superior control unit.
11	B	
12	C	

The function of inputs and outputs depends on the control unit used and its parameter setting.

4.5.2 Compact reader 91 04 with permanently connected connecting cable

The wires of the connecting cable have different colors.

The following table shows the assignment on the basis of the wire color.

Color	Assignment	Description
blue	DC- / AC	Power supply input 12 – 27 V AC; 10 – 34 V DC.
red	DC+ / AC	
yellow	NC	Relay output, contact load 30 V AC/DC, max. 2 A.
green	COM	
orange	NO	
white	GND	Digital inputs The inputs are connected to common ground using a simple switch or relay contact.
white/black	IN1	
gray	IN2	
white/red	-	
brown	A	RS -485 subpartyline, data interface to the superior control unit.
violet	B	
black	C	
rose	Shield	

4.5.3 Note on the use of door openers

The relay can be used for activating the door opener. For door openers supplied with direct voltage, a freewheeling diode must be connected in parallel to suppress interference (in reverse direction). A varistor must be connected in parallel to AC door openers.

4.6 Setting the switches

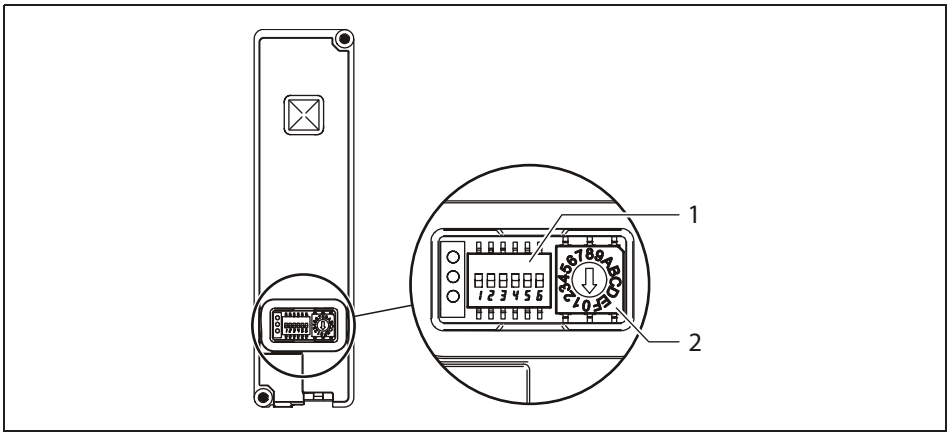

A DIP switch (1) and a rotary switch (2) are located on the front of the compact reader.

4.6.1 DIP switch

Switch 1		**RS-485 bus termination**
	ON	Terminating resistor 4.7 kOhm (star topology)
	OFF	Open
Switch 2	ON	Bus terminating resistor 120 Ohm
	OFF	Open
Switch 3		Not used
Switch 4		**Rotary switch settings**
	ON	The interface parameters and the GID/DID, set in system mode by means of the LOWPAR command, are active (special applications).
	OFF	The device address DID set by means of the rotary switch is active, the GID group address is always 00. The baud rate of the subpartyline 9600 or 19200 is detected automatically by the remote reader.
Switch 5		**System mode**
	ON	The device is started in system mode after switch-on (Service/Setup).
	OFF	The terminal software is started after switch-on (normal start).
Switch 6		**Cold start**
	ON	A cold start is performed after switch-on and the update mode is started.
	OFF	Normal start.

The switch positions needed for normal operation as a subterminal are shown in bold with a gray background.

4.6.1.1 RS-485 bus termination

The RS-485 terminating resistor is set via DIP switches 1 and 2.

The selection of the terminating resistors depends on the connection architecture.

Bus wiring

In the example, the subterminals (2) are connected to the superior control (1) via a bus.

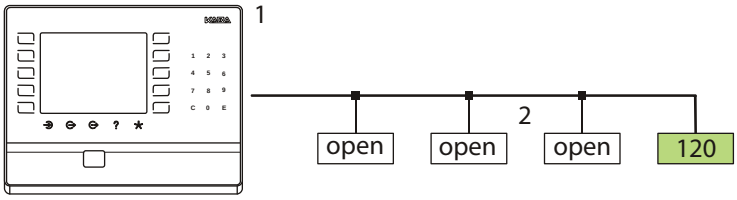

The last terminal at the bus requires a 120-ohm terminating resistor.

Star wiring

In the example, the subterminals (2) are connected to the superior control (1) via a star topology.

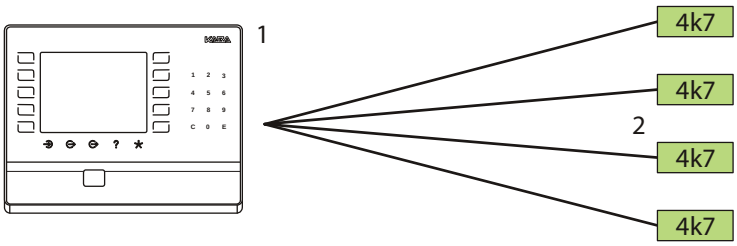

All subterminals require a 4.7-kohm terminating resistor.

4.6.2 Rotary switch

A device is addressed via the RS-485 subpartyline by means of the group address and device address.

The rotary switch is used to set the logical device address (DID) of the subterminal.

The GID logical group address is fixed to 00 and cannot be changed.

Position	DID
0	16
1	01
2	02
3	03
4	04
5	05
6	06
7	07
8	08
9	09
A	10
B	11
C	12
D	13
E	14
F	15

4.7 Final assembly

After the connections have been made and the switches have been set, the final assembly of the compact reader is carried out.

In case of cable feed from below:

- Break off the tab at the inside cover.

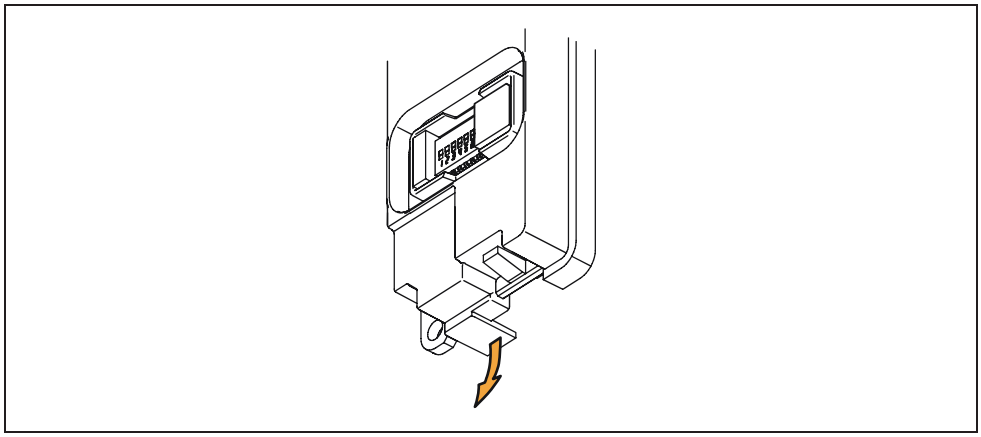

Carrying out the final assembly:

1. Place core on the base frame and screw it down.
2. Insert sealing plug
3. Hang in front cover at the top and then press it at the bottom into the base frame until it locks into place.

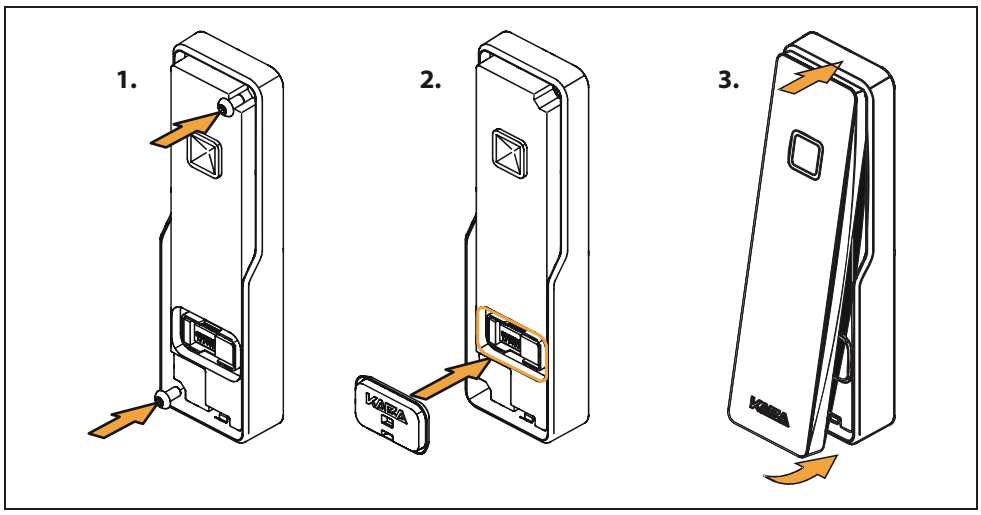

This completes the installation process.

4.8 Dismounting

Dismounting the compact reader:

1. Unlock the locking tab of the front cover using a small screwdriver. Lift off the front cover at the bottom and then disengage it at the top and remove it.
2. Remove the sealing plug (if required)
3. Unscrew the fastening screws and remove the core from the base frame.

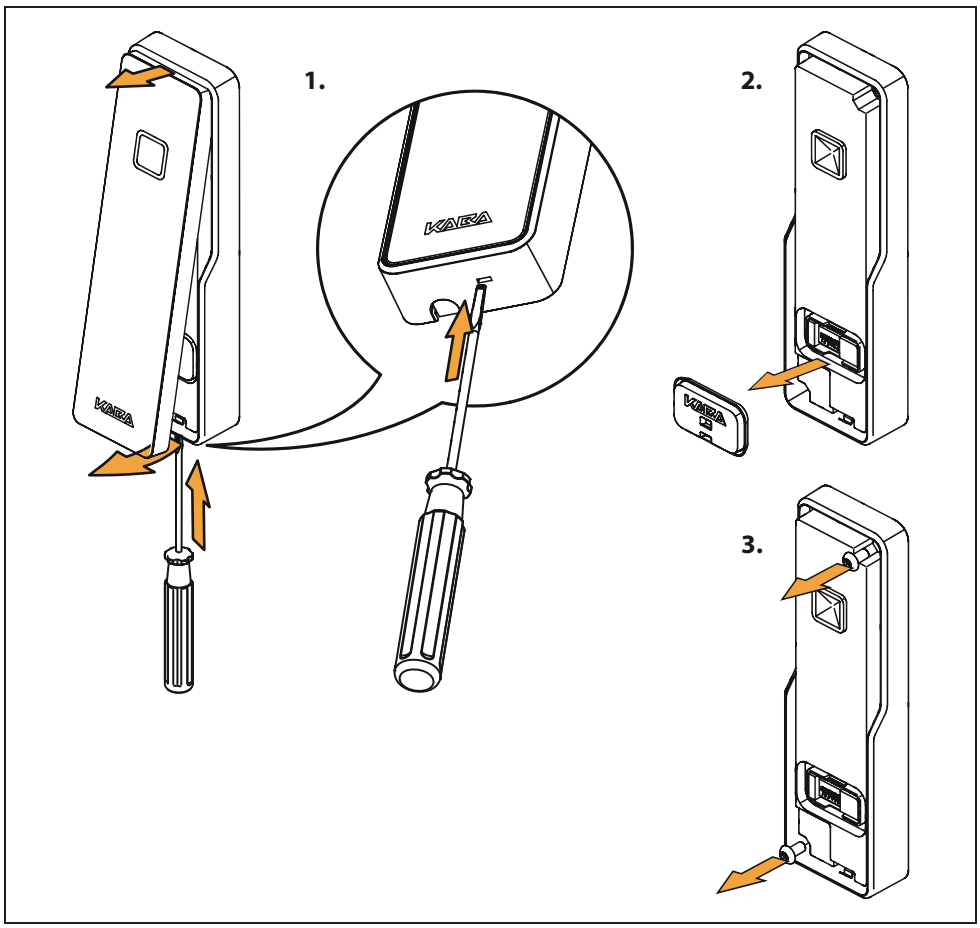

5 Start-up

5.1 Set-up procedure

1. Switch on the power supply
2. Log the subterminal on to the control unit in B-COMM and put it into operation.
3. Carry out a functional test.

5.2 Cold start

The device is reset to default (factory) settings by means of a cold start.

How to perform a cold start:

- Turn off the device.
- Set DIP switch 6 to ON.
- Turn on the device.

  An acoustic signal can be heard; after approx. 3 seconds, the luminous ring blinks alternately in red and green.
- Turn off the device.
- Set DIP switch 6 to OFF.
- Turn on the device.

  The device is now again in normal operation mode.

6 System mode

6.1 Function of the system mode

The system mode allows setting additional parameters for the device.

Default (factory) parameters can be modified in system mode. However, the parameters need only to be modified via the system mode for special applications.

6.2 Access to the system mode

It can be accessed via the data interface of the device. A service PC is connected by means of the parameter setting tool, order number 04036126.

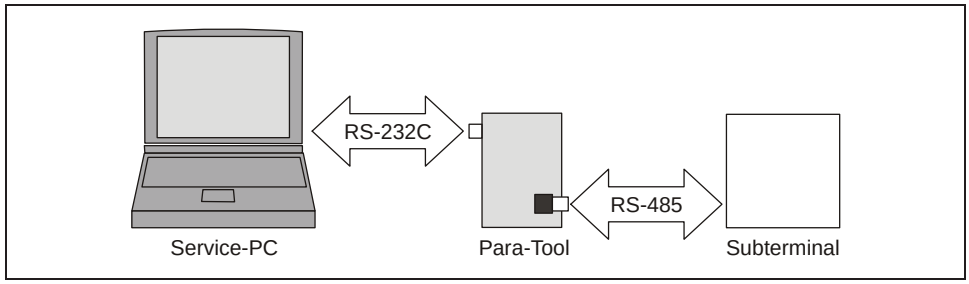

For communication with the system mode, a standard terminal software, e.g. HyperTerminal, is used on the service PC.

The connection is established with the following communication parameters:

Baud rate: 9600 Baud

Parity: even

Data bits: 7

Stop bits: 1

6.3 Starting the system mode

Start the device in system mode.

1. Turn off the device.
2. Set DIP switch 5 to ON (see chapter 4.6.1).
3. Turn on the device.

   The device starts in system mode.

After starting system mode, the device replies with the prompt (<CR>, <LF>, '>') in the terminal software window.

The luminous ring blinks red while the device is in system mode.

6.4 Terminating the system mode

Terminate the system mode and start the device with terminal software (normal start).

1. Turn off the device.
2. Set DIP switch 5 to OFF (see chapter 4.6.1).
3. Turn on the device.

   The device starts with the terminal software.

The system mode is not terminated automatically with a timeout.

6.5 Commands

Commands only contain capital letters and terminate with <CR>.

When entering commands, the characters following the command are ignored, as parameters might follow if the device is provided with an operating system. A wrong command is shown as follows:

```
Command not found
>_
```

Once a command has been called successfully, it will be processed.

Upon termination of a command, the device terminal displays a prompt.

If the output of a command is too large for the screen, the stopped output can be continued with <CR> (Enter key).

If an error is detected upon termination of the command, an error message will be displayed before outputting the prompt:

```
Write Error
>_
```

After entering <BS> (backspace key) or <DEL> (delete key), the last entered character is deleted and the cursor is put back one character.

All entered characters are sent back as echo.

It is checked whether the parameters are correct, and only correct parameters are applied. The parameters are only accepted if the format (length) is strictly adhered to.

Before entry, a parameter description is displayed. The currently valid parameter values, surrounded by simple quotation marks ('parameter'), are then transmitted.

Preset parameters can be applied by means of <CR> (Enter key).

The character '_' represents the cursor in the following examples.

6.5.1 SETHWC

The SETHWC command (Set Hardware Configuration) is used to enter the parameters defining the device hardware.

After having changed hardware parameters, a cold start must be performed to enable the parameters.

Example:

```
>SETHWC
Protocol
 Type                  : '01'            : 01
Keyboard
 Type                  : '31'            : 31
AUX 1
 Type                  : '47'            : 47
 CIR                   : '00'            : 00
LEDs
 Number                : '02'            : 02
Outputs
 Number                : '01'            : 01
Inputs
 Number                : '02'            : 02
Buzzers
 Number                : '01'            : 01
```

6.5.1.1 Description of the parameters

Protocol type:		
2-digit protocol to control unit (data interface)		Default
00	No protocol	
01	BPA/9 Subset protocol	X

Keyboard type:		
2 digits keyboard type		Default
00	No keyboard	X

Driver type for AUX channels:		
Devices with RFID reader		Default
14	LEGIC	
47	MIFARE	
00	No component	

CIR:		
2 digits for CIR 1+2 each		Default
00	No CIR	X
01	CIR provided, depending on component for AUX channel	

LED number:		
2 digits number of LEDs		Default
02	2 LEDs	X

Output number:		
2 digits number of outputs		Default
01	1 output	X

Input number:		
2 digits number of inputs		Default
02	2 inputs	X

Buzzer number:		
2 digits number of acoustic signal generators		Default
01	1 acoustic signal generator	X

6.5.2 GETHWC

The command GETHWC (Get Hardware Configuration) is used to display the parameters set with the SETHWC command.

6.5.3 GETPRG

The command GETPRG (Get Program Number) is used to query the program number of the device.

Example:

```
>GETPRG
Program Number       : '854-00-X-K00'
  >_
```

6.5.4 GETKVS

The command GETKVS (Get Kaba Version String) is used to query the program number of the device in the format of the Kaba Programmer 1460.

Example:

```
>GETKVS
Version String       : 'ARCC01.04RA'
  >_
```

6.5.5 RUN

The RUN command (restart of the program) is used to perform a warm start.

Example:

```
>RUN_
```

The warm start is indicated by the following message:

```
>Restarting …
```

Depending on the position of DIP switch 5, the device will start in system mode or with the terminal software (normal start).

6.5.6 COLD

The COLD command starts execution of a cold start (see chapter 5.2).

Example:

```
>COLD_
```

The following messages appear:

```
Resetting device with Cold Start
Are you sure?
```

After acknowledgement with '1' or 'Y', the cold start is executed and indicated by the following message:

```
>Restarting ...
```

In all other cases, there is no action, and the system mode remains active.

6.5.7 ORIGIN

The ORIGIN command resets the device to its delivery state. This applies to all cold start parameters, to hardware parameters that can be set using the SETHWC command and to the diagnostics data.

Example:

```
>ORIGIN_
```

The following messages appear:

```
Resetting device to delivery state
Are you sure?
```

After acknowledgement with '1' or 'Y', the delivery state is restored and indicated by the following message:

```
>Restarting ...
```

In all other cases, there is no action, and the system mode remains active.

6.5.8 LOWPAR

The LOWPAR command (Low Level Parameterization) is used to set the parameters of the data interface.

The parameters for a protocol will only be queried if a protocol has been logged on with the SETHWC command.

These parameters are reset to the default values by a cold start. The default value is always the first value after the parameter name.

Low level parameterization with BPA/9 subset protocol (protocol type 01):

```
>LOWPAR
Serial Interface
 Baudrate            : 'AUTO       : 009600
 Number of Data Bits : '7'         : 7
 Parity              : '2'         : 2
 Number of Stop Bits : '1'         : 1
 Flow Control        : '0'         : 0
Protocol BPA/9
 Group (GID)         : '00'        : 01
 Device (DID)        : '00'        : 01
 Response-TO         : '005'       : 005
 Activity-TO         : '010'       : 010
 Output Delay        : '000'       : 000
```

6.5.8.1 Description of the parameters

Serial interface:

6 digits: Baud rate (001200 to 057600 and 009600/019200 (AUTO))

1 digit: Number of data bits (7, 8)

1 digit: Parity (0 or N = no; 1 or O = odd; 2 or E = even)

1 digit: Number of stop bits (1, 2)

BPA/9:

2 digits: Group number (00 to 29)

2 digits: Device number (00 to 59)

3 digits: Response timeout (001 to 999 = 0.1 – 99.9 sec.)

3 digits: Operating timeout (001 to 999 = 0.1 – 99.9 sec.)

3 digits: Transmit delay (000 to 999 = 0.0 – 99.9 sec.)

The parameters for "serial interface" as well as GID and DID can only be changed using the LOWPAR command if the DIP switch 4 is set to OFF.

6.5.9 GETDGN

The GETDGN command is used to query diagnostics data (possible errors).

Query without error messages:

```
>GETDGN_
No Errors found

>_
```

Query with error messages:

```
>GETDGN
Errors found        :  01
Code: 030    Meaning:  Error while allocating memory

   >_
```

The following error codes are possible:

```
1   Unspecific Error
2   Unknown Error
10  Error while initializing Task Manager
11  Error while creating Task
12  Error from Task Manager
20  Error while initializing  EEPROM
21  Error while writing to EEPROM
22  Error while reading from EEPROM
30  Error while allocating memory
31  Error while initializing Buffer
40  Error while writing to Display
```

6.5.10 RSTDGN

The RSTDGN command is used to delete all diagnostics data.

Example:

```
   >RSTDGN

   >_
```

7 Description of the subpartyline

In the online mode, communication between the subterminal and the superior control unit takes place via the subpartyline with BPA/9 subset protocol. The subpartyline is an RS485 bus operated in 2-wire technology. Normally, transmission takes place at 19,200 baud, with even parity and one stop bit. Alternatively 9,600 baud are also possible. 7 bit ASCII characters are transmitted.

7.1 BPA/9 Subset

The BPA (Benzing Protocol Asynchronous) is a master slave protocol with the subterminal being the slave. The master is always the superior control unit. The BPA's overall control is performed by the control unit.

The BPA/9 subset is a protocol of a reduced range of functions adapted to data exchange with subterminals.

7.2 Addressing

Since several subterminals can be connected to a control unit, these must be distinguished by addresses. For this, two addresses exist. The group ID (GID) is a group address, the device ID (DID) is the actual device address. These addresses are set at the subterminal.

In transmission these addresses are always ASCII characters. Capitals are used for GID and DID in a transmit poll. Lower case letters are used for GID in a receive poll:

Address	$DID_{(hex)}$
1	$A_{(41)}$
2	$B_{(42)}$
3	$C_{(43)}$
4	$D_{(44)}$
5	$E_{(45)}$
6	$F_{(46)}$
7	$G_{(47)}$
8	$H_{(48)}$
9	$I_{(49)}$
10	$J_{(4A)}$
11	$K_{(4B)}$
12	$L_{(4C)}$
13	$M_{(4D)}$
14	$N_{(4E)}$
15	$O_{(4F)}$
16	$P_{(50)}$

Address	$GID_{(hex)}$	
	Transmit poll	Receive poll
0	$@_{(40)}$	$´_{(60)}$
1	$A_{(41)}$	$a_{(61)}$
2	$B_{(42)}$	$b_{(62)}$
3	$C_{(43)}$	$c_{(63)}$
4	$D_{(44)}$	$d_{(64)}$
5	$E_{(45)}$	$e_{(65)}$
6	$F_{(46)}$	$f_{(66)}$
7	$G_{(47)}$	$g_{(67)}$

7.3 Control characters and control sequences

Control characters are displayed in angle brackets, e.g. ESC ($1B_{hex}$) as <ESC>. An underline character "_" is used as blank ($2Ø_{hex}$).

In the following examples "0" is used as group address (GID) and "1" as device address (DID).

The following characters and sequences are used as control characters:

Control characters/ sequence	Meaning		
<STX>	STX	Start of Text	Beginning of the text
<ETX>	ETX	End of Text	End of the text
<EOT>	EOT	End of Transmission	End of the transmission
<NAK>	NAK	Negative Acknowledgement	Negative feedback
<ENQ>	ENQ	Enquiry	Enquiry
<DLE> 0	ACK0	Acknowledgement 0	Alternating positive feedback
<DLE> 1	ACK1	Acknowledgement 1	
<DLE> <	RVI	Reverse Interrupt	Reverse interrupt

ACK0, **ACK1** and **RVI** consist of two characters. The second character (0, 1, <) added to the control character **DLE** defines which of the three control characters is meant.

The handshake in the BPA is effected via control characters and control sequences. The control sequences are:

<EOT>	**@**	**@**	**A**	**A**	**<ENQ>**	**Transmit poll**
<EOT>	**´**	**´**	**A**	**A**	**<ENQ>**	**Receive poll**

These control sequences instruct the subterminal to send existing data records or to receive a data record. For receive and transmit polling, the two addresses are sent twice in order to have a verification possibility.

<EOT> GID GID DID DID <ENQ>

7.4 Data records

Data records are marked up by the control characters **STX** (beginning) and **ETX** (end). The **ETX** is followed by an **LRC** - a check character which is calculated by exclusive OR of the data and the ETX control character. The **STX** is not considered in this calculation.

<STX> Data <ETX> LRC

7.5 Data from subterminal to control unit

Transmit poll

Control unit		Subterminal

The subterminal does not respond if the address is different than the own address, or if an error has been recognized, or if the two address characters are different. The control unit repeats the transmit poll after an internal timeout.

<EOT> GID GID DID DID <ENQ>	→	
		No response

In case of the same address the subterminal must respond. If it has no data for the control unit, an EOT is sent. This completes the entire transmission process.

<EOT> GID GID DID DID <ENQ>	→	
	←	<EOT>

If data exists, this data will be sent, waiting for the control unit's acknowledgement. If an RVI is received, the data is acknowledged which is confirmed by the subterminal by an EOT. This completes the transmission.

<EOT> GID GID DID DID <ENQ>	→	
	←	<STX> Text <ETX> LRC
<DLE><	→	
	←	<EOT>

If the control unit answers with NAK, the subterminal will repeat data transmission. The control unit repeats the NAK up to two times and then terminates the transmission by EOT. This does not yet acknowledge the data record and is not discarded by the subterminal. The subterminal waits for the next transmit poll to send the data record again.

<EOT> GID GID DID DID <ENQ>	→	
	←	<STX> Text <ETX> LRC
<NAK>	→	
	←	<STX> Text <ETX> LRC
<NAK>	→	
	←	<STX> Text <ETX> LRC
<NAK>	→	
	←	<STX> Text <ETX> LRC
<EOT>	→	

7.6 Data from the control unit to the subterminal

Receive poll

Steuerung		Subterminal
The subterminal will not respond if the address is different from the own address, or if an error has been detected, or if the two address characters are different. The control unit repeats the receive poll after an internal timeout.		
<EOT> GID GID DID DID <ENQ>	→	
		No response

If the address has been detected correctly, the receive poll is acknowledged by the subterminal by ACK0. After that the control unit sends the data record, which is acknowledged by ACK1 if correctly received. If the control unit receives a correct acknowledgement, the control unit terminates the transmission by sending an EOT.

<EOT> GID GID DID DID <ENQ>	→	
	←	ACK0
<STX> Text <ETX> LRC	→	
	←	ACK1
<EOT>	→	

If the control unit's data record has not been received correctly, the subterminal will acknowledge by sending an NAK until the record has been understood.

<EOT> GID GID DID DID <ENQ>	→	
	←	ACK0
<STX> Text <ETX> LRC	→	
	←	<NAK>
<STX> Text <ETX> LRC	→	
	←	ACK1
<EOT>	→	

If the control receives no correct acknowledgement, it will send an ENQ to request a retry of acknowledgement.

<EOT> GID GID DID DID <ENQ>	→	
	←	ACK0
<STX> Text <ETX> LRC	→	
	←	No response
<ENQ>	→	
	←	ACK1
<EOT>	→	

7.7 Escape sequences

The subterminal functions are controlled by the following escape sequences.

Which ESC sequences are used or supported depends on the particular control unit.

7.7.1 Controlling LED, relay and beeper

The following sequences are used to control the relay, the acoustic signal generator (beeper) and the optical signal generator (LED) in the subterminal.

Meaning	Code
Switching on LED *Pn*	<ESC>[*Pn*q
Switching on blinking LED *Pn*	<ESC>[?*Pn*q
Switching on inverse blinking LED *Pn*	<ESC>[<*Pn*q
Switching off LED *Pn*	<ESC>[=*Pn*q

Pn: Number of the local LED: 1 = green, 2 = red

Meaning	Code
Switching off all relays and beeper	<ESC>[q
Switching on beeper	<ESC>[99q
Switching on alternating beeper	<ESC>[?99q
Switching on inverse alternating beeper	<ESC>[<99q
Switching off beeper	<ESC>[=99q
Switching on relay	<ESC>[3q
Switching off relay	<ESC>[=3q

The acoustic signal transmitter in the subterminal is activated by means of the control character <BEL> for 0.3 seconds. The acoustic signal generator does not need to be switched off afterwards.

Meaning	Code
Triggering the beeper dynamically	<BEL>

7.7.2 Reset

The following ESC sequence will reset the subterminal. The same settings as after a warm start will then apply to all parameters.

Meaning	Code
Performing reset	<ESC>c

After a reset, the subterminal will send the ESC sequence “LOG IN”.

Meaning	Code
LOG IN	<ESC>[98~

7.7.3 Device configuration

The device configuration of the subterminal is requested by means of the following ESC sequence. The subterminal sends the ESC sequence “Device configuration” in response.

Meaning	Code
Requesting device configuration	<ESC>[c
Response from the subterminal	<ESC>[:2;*Ps*;*Ps*;..c

The number of configuration entries may vary depending on the device configuration. The individual configuration entries are separated from each other by “;” (semicolon).

Example:

```
<ESC>[:2;0;?10;?41;?120;?1031;?1147;?1200c
```

Ps: State:

0	= Keyboard available
3	= No keyboard available
?10	= Channel AUX 1 available
?13	= Channel AUX 1 not available
?40	= Input 1 open (alarm)
?41	= Input 1 closed (no alarm)
?120	= Input 2 open
?121	= Input 2 closed

Type:

?1000	No keyboard available
?10xx	Keyboard type 31 = B-web 91 15
?1100	Channel AUX 1 not available
?11xx	Component type xx at AUX 1 channel, type 47=MIFARE, 39=LEGIC
?1200	No display available

7.7.4 Program number

The program number (version of the terminal software) is requested by means of the following ESC sequence. The subterminal will send the ESC sequence “Report program number” in response.

Meaning	Code
Requesting program number	`<ESC>[?c`
Response from the subterminal	`<ESC>[?18 O<ESC>P852-00-X-K00<ESC>\`
	1 2

1) Space = 20_{Hex}
2) O as in Otto = $4F_{Hex}$

7.7.5 Recorded data

After entering a badge, the subterminal will send the following sequence.

Meaning	Code
Badge data	`<ESC>[?11 O<ESC>P`*DATA*`<ESC>\`
	1 2

1) Space = 20_{Hex}
2) O as in Otto = $4F_{Hex}$

DATA: Badge data

7.7.6 Hex representation of the recorded data

The Hex representation of the collected data is set by means of the following ESC sequences.

Meaning	Code
Hex representation with letters	`<ESC>[?14i`
Hex representation with special characters	`<ESC>[?15i`

Example:

Hex representation with letters:	`0123456789ABCDEF`
Hex representation with special characters*:	`0123456789:;<=>?`

* Default (after a warm start or cold start)

7.7.7 Acoustic acknowledgement for reading

Correct reading of a badge can be acknowledged by a short acoustic signal.

This acoustic acknowledgement can be switched on/off with the following ESC sequence:

Meaning	Code for AUX 1
Acoustic acknowledgement ON	`<ESC>[?16i`
Acoustic acknowledgement OFF*	`<ESC>[?17i`

* Default (after a warm start or cold start)

7.7.8 Digital inputs

The subterminal sends the following sequences if the state of the inputs has changed.

Meaning	Code
Input 1 open	`<ESC>[70~`
Input 1 closed	`<ESC>[71~`
Input 2 open	`<ESC>[72~`
Input 2 closed	`<ESC>[73~`

After resetting, the states of all logged-on digital inputs are reported.

The states of all logged-on digital inputs can be requested by means of the following command:

Meaning	Code
Requesting input states	`<ESC>[?99c`

8 Maintenance

8.1 Updating terminal software

The terminal software can be updated if needed.

Update of terminal software requires special equipment which usually is only available to authorized specialist partners and Kaba Service staff.

8.1.1 Programming interface

The compact reader contains a 3-pin socket (1) on the front for connecting the Kaba Programmer 1460. This programming interface is used for updating the terminal software.

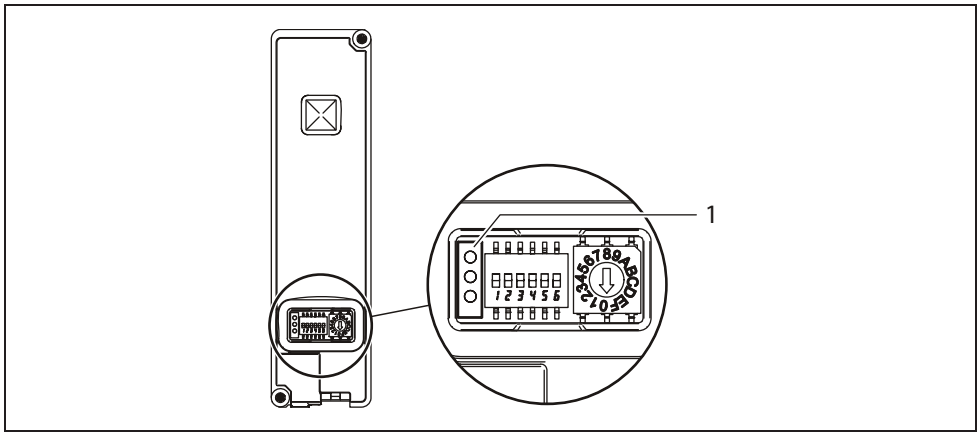

8.1.2 Equipment

The following equipment is needed for terminal software update:

- Current terminal software:
- Service PC with Kaba EAC Service Tool.
- Kaba Programmer 1460.

8.1.3 Procedure

Preparation:

1. Transfer the current terminal software to Kaba Programmer 1460 using the EAC Service Tool.

Details on how to proceed can be found in the description of the EAC Service Tool and the Kaba Programmer 1460 operating instructions.

Updating the subterminal firmware:

2. Turn off the device.
3. Set DIP switch 6 to ON (see chapter 4.6.1).
4. Turn on the device.

   The luminous ring blinks red/green after 2 short acoustic signals.
5. Connect Programmer 1460 to the programming socket of the device.

   LED briefly blinks twice. Blinking extinguishes after a short acoustic signal.
6. Select the terminal software on Programmer 1460 and start the update.

   Short acoustic signal, LED briefly blinks twice in green.

9 Packaging / returns

Not properly packaged components and devices can cause costs due to damages during shipping.

Please observe the following information when sending products to Kaba.

Kaba GmbH is not liable for products that have been damaged due to negligent packaging.

9.1 Complete devices

The original packaging has been specifically designed to fit the device. It offers maximum protection against damage in transit.

Always use the original packaging for returning the products!

If this is not possible, packaging which ensures that the device is not damaged during shipping and handling must be provided.

- Use a robust and thick-walled transport box or cardboard box. Approximately 8 to 10 cm of space needs to be allowed on either side of the device.
- Wrap the device with a suitable foil or put it into a bag.
- Generously stuff foam pads or air cushions, for example, all around device. Movements of the device inside the packaging must be excluded.
- Use only dustless and environmentally friendly padding material.

9.2 Electronic assemblies

ESD sensitive electronic assemblies such as printed circuit boards, readers, etc. must be stored, transported, and shipped in appropriate ESD protective bags.

Electronic assemblies may only be packed at ESD secure workplaces and by persons familiar with general ESD safety standards and who apply them on a regular basis.

Returning electronic assemblies in packaging with sufficient ESD protection is a prerequisite for

- the submission of warranty claims after functional failures of any type.
- replacement of printed circuit boards and electronic components in exchange.

Electronic components delivered in packaging without sufficient ESD protection are --in order to maintain a high quality standard-- neither analyzed nor repaired but directly disposed of.

9.3 Labeling

Complete return documents and a correct labeling allow for fast processing.

Please make sure that each package includes a delivery note. The delivery note should contain the following information:

- Number of devices or components per package.
- Product numbers, serial numbers, specifications.
- Name and address of your company / contact person.
- Reason for return, e.g. repair exchange.
- Meaningful and detailed error description.

Returns from countries outside the European Union require a customs invoice stating the real customs value.

Some countries (e.g. Switzerland) require a preference.

10 Disposal

This product complies with the WEEE directive and is, according to DIN EN standard 50419, marked with the “Crossed out garbage can” symbol. See chapter 3.3 Labeling.

The symbol refers to separated disposal of electric and electronic devices in EU countries.

Please do not dispose of device in your regular garbage.

Used devices contain valuable materials that should be recycled. Used devices should therefore be disposed of via your country’s take back system.

At the end of use of the goods supplied, Kaba GmbH will take them back for a proper disposal in accordance with the legal regulations (German law on the disposal of electrical equipment (ElektroG)). Charges incurred for transport to the manufacturer will be at the expense of the owner of the waste electrical equipment.

In the EU and Switzerland, electronic devices have to be disposed of according to national disposal and environmental legislation.

Please dispose of in an environmentally responsible way.

The packaging materials are recyclable. Please do not throw packaging material into your regular garbage can. Always take it to a recycling center or have it picked up by your local waste recycler.

11 Index

A

Access control manager ... 16, 17, 20
Acoustic acknowledgment ... 46
Addressing ... 27, 39
Ambient temperature ... 11
ARIOS ... 17

B

Badge input ... 18
B-Client AC2/3 ... 17
B-Client HR10 ... 17
B-COMM ... 16, 17
B-Net 92 50 ... 17
B-Net 92 90 ... 17
Booking ... 18
BPA/9 Subset ... 39
B-web 93 00 ... 17, 20

C

CardLink ... 17
CE conformity ... 12
Clearances ... 19
COLD ... 36
Cold start ... 25, 30, 36
Communication software ... 17
Conformity ... 12
Connections ... 19, 23
Controlling relay and beeper ... 43

D

Data line ... 21
Delivery state ... 36
Design ... 14
Device address (DID) ... 27
Device configuration ... 44
Device structure ... 15
Device variants ... 14
Diagnostics data ... 38
DID ... 27
Digital inputs ... 46
Dimensions ... 11
DIP switch ... 25
Dismounting ... 29
Disposal ... 51
Door contact ... 20
Door frame contact ... 20
Door opener ... 20, 24

E

Electromagnetic fields ... 19
EMC Directive ... 12
Escape sequences ... 43
ESD (electrostatic discharge) protective measures ... 8

F

Fastening the base frame ... 22
Final assembly ... 28
Functions ... 17

G

GETDGN ... 38
GETHWC ... 35
GETKVS ... 35
GID ... 27
Group address (GID) ... 27

H

Hex representation of the recorded data ... 45

I

Identification plate ... 13
Ingress protection ... 11
Inputs ... 10, 17
Installation ... 19
Installation conditions ... 19
Installation diagram ... 20
Installation lines ... 20, 21
Interfaces ... 10

L

Labeling ... 13
Low voltage directive ... 12
LOWPAR ... 37
Luminous ring ... 18

M

Maintenance ... 47
Mounting height ... 19

O

Operation ... 18
ORIGIN ... 36
Outputs ... 17

P

Power supply cable ... 21
Product description ... 9
Program number ... 45

R

R&TTE ... 12
Reader ... 10
Recorded data ... 45
Registration unit ... 17
Relative humidity ... 11

Relay outputs 10
Reset 44
RFID reader types 14
RoHS 12
Rotary switch 27
RS-485 10
RSTDGN 38
RUN 35

S

SETHWC 33
Site keys 17
Start-up 30
Subpartyline 39
Supported features 17
Switches 25
System connection 16
System mode 25, 31
System requirements 17

T

Technical data 10
Terminal software 14
Time and attendance terminal 16, 17, 20

U

Umgebungsbedingungen 11
Use as directed 7