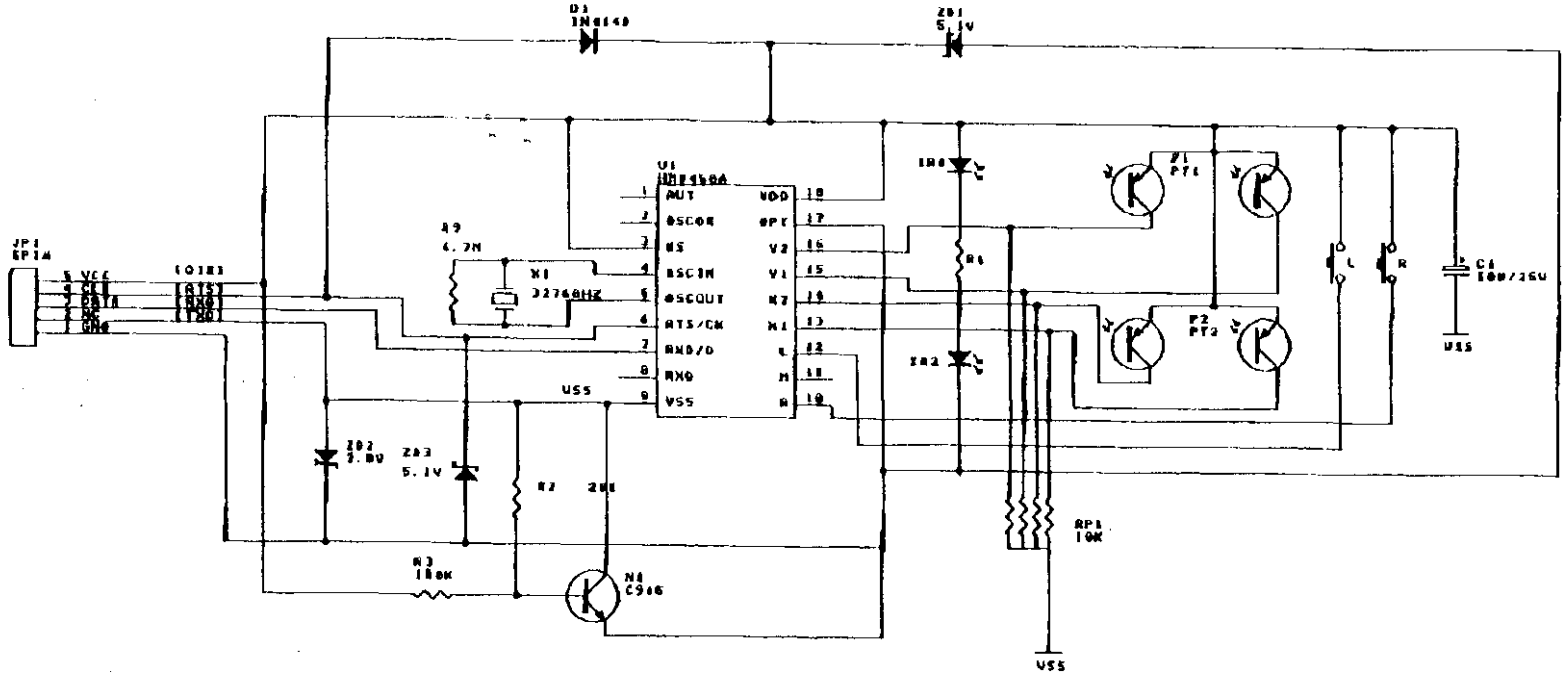

Title	PS/2 & M2 Mouse	
Size A1	Number 9636	Revision 1.0
Date 17-OCT-1990	Sheet 1 of 1	