Cover letter

Table of Contents

Statement Representative Model RF380R for RF280R / RF382R-Variants (Cover letter) 1
PCB RF380R 5
PCB RF280R (RS422/RS232) 6
Definition and Justify ot test cases and re-using of test cases 7
Ferrite plate RF380R 8

Statement Representative Model RF380R for RF280R / RF382R-Variants (Cover letter)

These four Reader hardware-variants are considered / compared:

Items common to all Reader models

All readers use the same PCB, only several components mounted differ by these 4 variants!
All readers use the same housing
All readers have the same input protection and power supply circuit

1.) RF380R:

RF380R is the 'full' reader-version including all hardware- and firmware-features. RF380R supports both RS232 and RS422 interface.
RF380R uses an internal magnetic loop antenna along with a ferrite plate which increases immunity against the reader's metal environment.

Copyright © Siemens AG 2017 All Rights Reserved – Confidential

2.) RF280R-RS232:

RF280R-RS232 is a 'light' version of RF380R. RF280R-RS232 uses only RS232-interface, and does not support MIFARE.
RF280R-RS232 uses an internal magnetic loop antenna.
RF280R-RS232, unlike RF380R, does NOT have a ferrite plate which increases immunity against the reader's metal environment.
Therefore the mass of Model RF280R-RS232 is less than the mass of model RF380R.

3.) RF280R-RS422:

RF280R-RS422 is a 'light' version of RF380R. RF280R-RS422 uses only RS422-interface, and does not support MIFARE
RF280R-RS422 uses an internal magnetic loop antenna.
RF280R-RS422, unlike RF380R, does NOT have a ferrite plate which increases immunity against the reader's metal environment.
Therefore the mass of Model RF280R-RS422 is less than the mass of model RF380R.

4.) RF382R:

Like RF380R, RF382R is a 'full' reader-version including all hardware- and firmware-features. RF382R supports both RS232 and RS422 interface.
RF382R, same as RF380R, RF382R is intended for SCAN-Mode, using SCAN-Mode firmware.
RF382R uses an internal horseshoe-shaped magnetic ferrite antenna.
All major components are identical to RF380R, only minor components are different (0 Ohm Jumper resistors for connecting the loop antenna are not mounted, impedance matching capacitors have different values).
The impedance matching network of RF382R matches the impedance of the horseshoe antenna to an impedance of 50 Ohms, the same impedance as in RF380R.
Therefore the RF382R has the same power consumption as the RF380R.
The mass of the horseshoe antenna is 61 g, the mass of the ferrite plate of RF380R is 130 g. Therefore the mass of Model RF382R is less than the mass of model RF380R.

Influence of the ferrite plate in RF380R

The effect of the ferrite plate on the fundamental is as follows:
The ferrite plate in RF380R is used as a shield at the back side of the antenna in order to reduce the detuning effect when the reader is mounted on metal. This is due to the fact that most of the magnetic flux lines leaving the loop antenna at the back

Copyright © Siemens AG 2017 All Rights Reserved – Confidential

side are concentrated inside the ferrite plate and are leaving the plate at the narrow side. This does not cause a significant amplification of the Signal in forward direction.

Of course, the ferrite plate has an influence on the inductivity of the loop antenna. This, however, is compensated by different values of the matching capacitors, (C700, C701, C710 … C714 and C717 in the schematics) for RF280R and RF380R, so that the impedance of the internal antenna of the RF380R is 50 ohms, as well as the antenna of the RF280R. Since the antenna impedance is 50 ohms for both reader models, the transmitted power is also the same for both models. Even if there were a (small) kind of antenna gain in forward direction, caused by the ferrite plate of the model RF380R2, we used this model as representative, because the measured absolute values of OBW and spectrum mask of RF280R would then be less than those of the RF380R2.

The shapes of OBW and spectrum mask are mainly influenced by the modulation scheme, which is similar for both models.

Copyright © Siemens AG 2017 All Rights Reserved – Confidential

Below listed you find all key components, quoting component designator for each reader variant. In order to locate these key components on the PCB, refer to picture below.

(x means: component mounted on PCB; - means: component not mounted)

No.	Component Designator	Manufacturer	Type	Function / description	RF380R	RF280R-RS232	RF280R-RS422	RF382R
1	D101	Maxim	MAX3221	RS232 interface IC	x	x	-	x
2	D100	Maxim	MAX3491	RS422 interface IC	x	-	x	x
3	N201	Texas Instruments	TPS54160	DC-DC-converter 24V → 5,3V	x	x	x	x
4	N200	Texas Instruments	LM1117	Low Dropout DC Regulator 5,3V → 3,3V	x	x	x	x
5	N202	Linear Technology	LT1963	Low Dropout DC Regulator 5,3V → 4,6V	x	x	x	x
6	L201	TDK	100µH	100µH power inductor for DC-DC-converter	x	x	x	x
7	N300	AMS	AS3911	RFID-Chip	x	x	x	x
8	B300	NDK	27.12MHz±50ppm_QOR_04	27,12MHz crystal	x	x	x	x
9	D400	ST Microelectronics	STM32F407VGT6TR	ARM Microcontroller	x	x	x	x
10	D401	Texas Instruments	LVT574	Octal 3-state-Flipflop	x	-	-	x
11	D402	Texas Instruments	LVT574	Octal 3-state-Flipflop	x	-	-	x
12	D500	Cypress	CY62147EV30LL-45ZSXI	SRAM 256kx16, TSOPII_44_01	x	-	-	x
13	H500	Osram	LRTB-GFTG/GVTG	Multi-LED enhanced optical power LED	x	x	x	x
14	H501	Osram	LRTB-GFTG/GVTG	Multi-LED enhanced optical power LED	x	x	x	x
15	N600	NXP Semiconductors	MFRC522	MIFARE decoder	x	-	-	x
16	-	-	-	Loop Antenna on PCB	x	x	x	-
17	-	Siemens	Antenna RF382-G2; 2.3µH; Q=100	TiZn-ferrite horseshoe-shaped antenna	-	-	-	x
18	V101	Vishay Semiconductors	SMCJ33A 1.5kW DO214AB	Zener Diode 33,3V	x	x	x	x
19	C220	Nichicon	220µF_50V	220µF Low impedance, high temperature	x	x	x	x
20	Z700	Delta Electronics	LFE8505T	BalUn RF transformer for external antenna	-	-	-	-
				(not used in these four reader variants)				
21	X100	-	-	Holes for 8-pin M12 male connector	x	x	x	x

Copyright © Siemens AG 2017 All Rights Reserved – Confidential

PCB RF380R

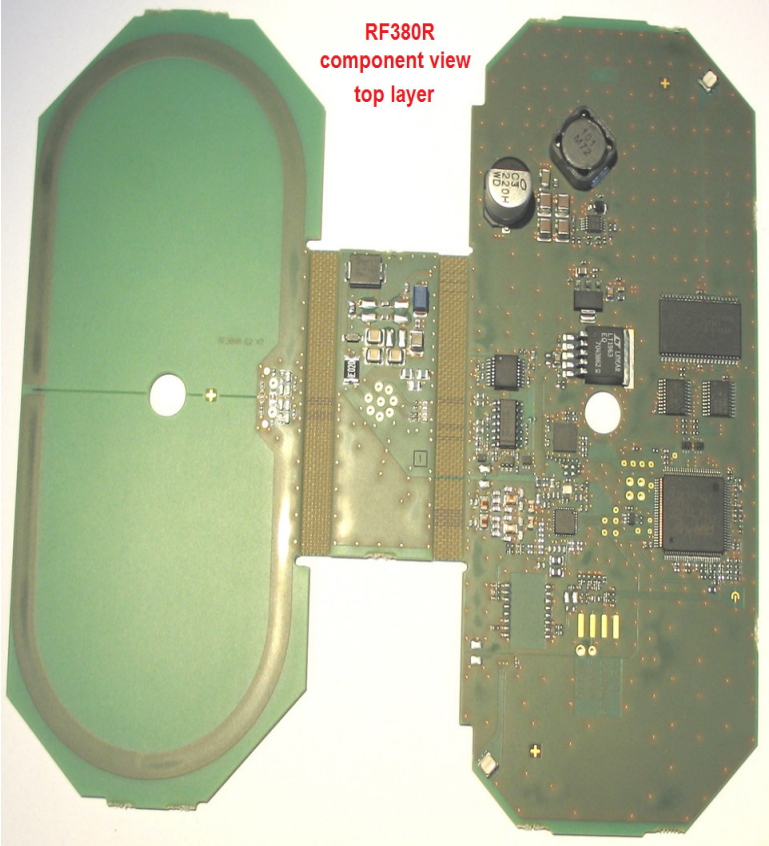
RF380R
component view
top layer

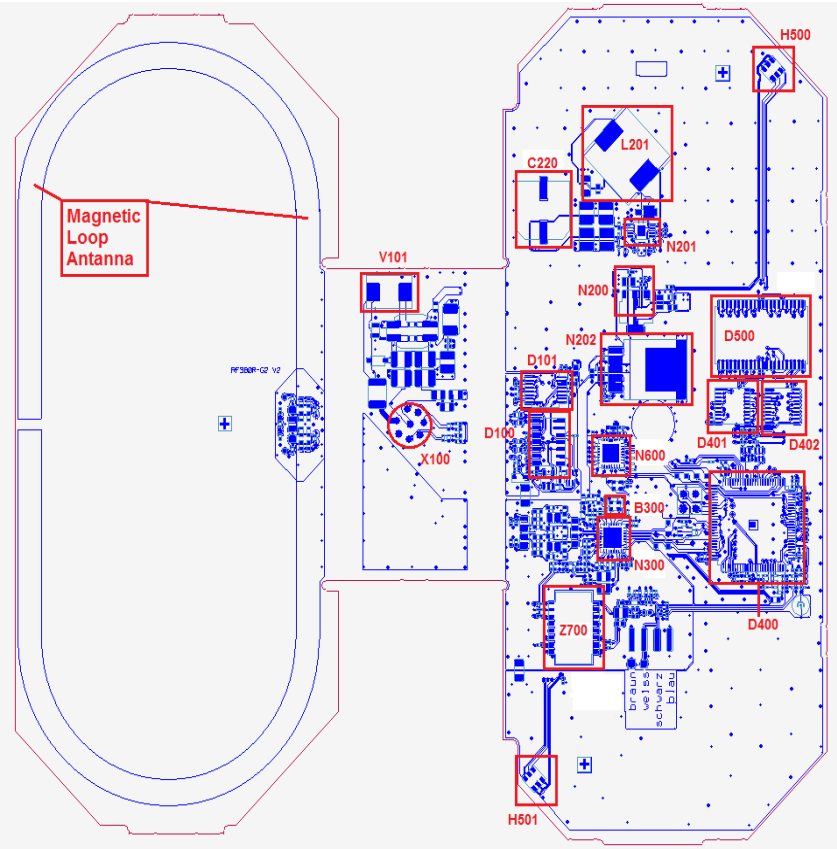
Magnetic
Loop
Antanna
H500
L201
C220
N201
V101
N200
D500
N202
D101
D100
X100
N600
D401
D402
B300
N300
Z700
D400
H501

PCB RF280R (RS422/RS232)

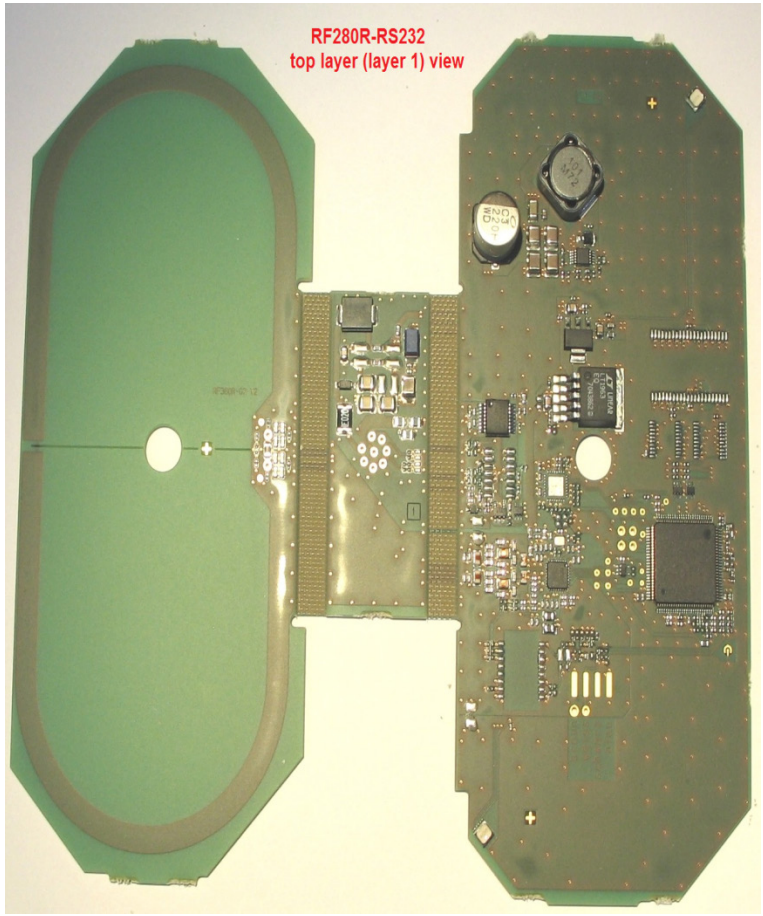

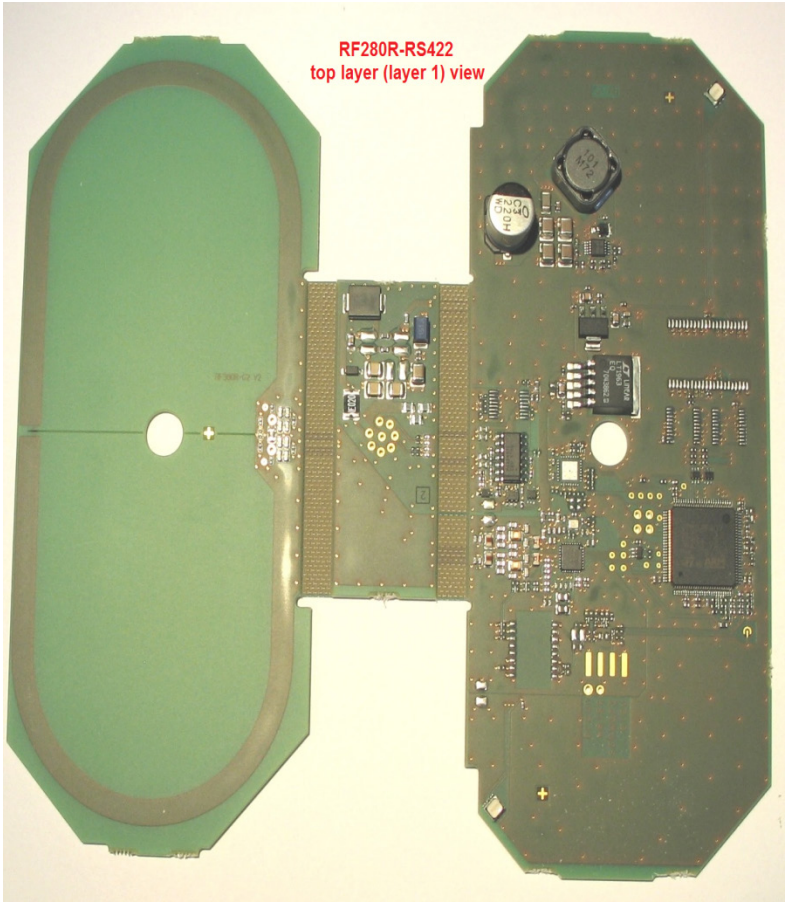

Copyright © Siemens AG 2017 All Rights Reserved – Confidential

Definition and Justify ot test cases and re-using of test cases

Conducted and radiated emission tests were performed with both variants of RF280R. For each individual test in sections**(*** 8.4, 8.6, 8.7, it is stated in the report whether it was done with the RS232 or RS422 variant.

Since the RF interface of model RF380R02 is also identical to the RF interface of both RF280R models, the OBW, spectrum mask etc. of RF380R02 are representative for RF280R. Measurements in sections**(*** 8.1, 8.2, 8.3, 8.5, 8.8 are made with representative model RF380R02.

The differences between all variants, have no impact on the behaviour of the RF interface. The RF interface is identical in all 3 variants, shown at the schematics (RF380R:A5E39383571A, RF280R-RS422:A5E39383572A, RF280R-RS232:A5E39383573A) of the RF-frontend and the antenna matching.

(* reference to TÜV SÜD Test Reports No. TR-72654-07139-01 (Edition 2) and TR-72654-07139-02(Edition 4)

8.1 Occupied Bandwidth
8.2 Bandwidth of the Emission
8.3 Designation of Emissions
8.4 Conducted Powerline Measurement 150 kHz to 30 Mhz
8.5 Spectrum Mask
8.6 Radiated Emission Measurement 9 kHz to 30 MHz
8.7 Radiated Emission Measurement 30 MHz to 1 GHz
8.8 Carrier Frequency Stability

Copyright © Siemens AG 2017 All Rights Reserved – Confidential

Ferrite plate RF380R

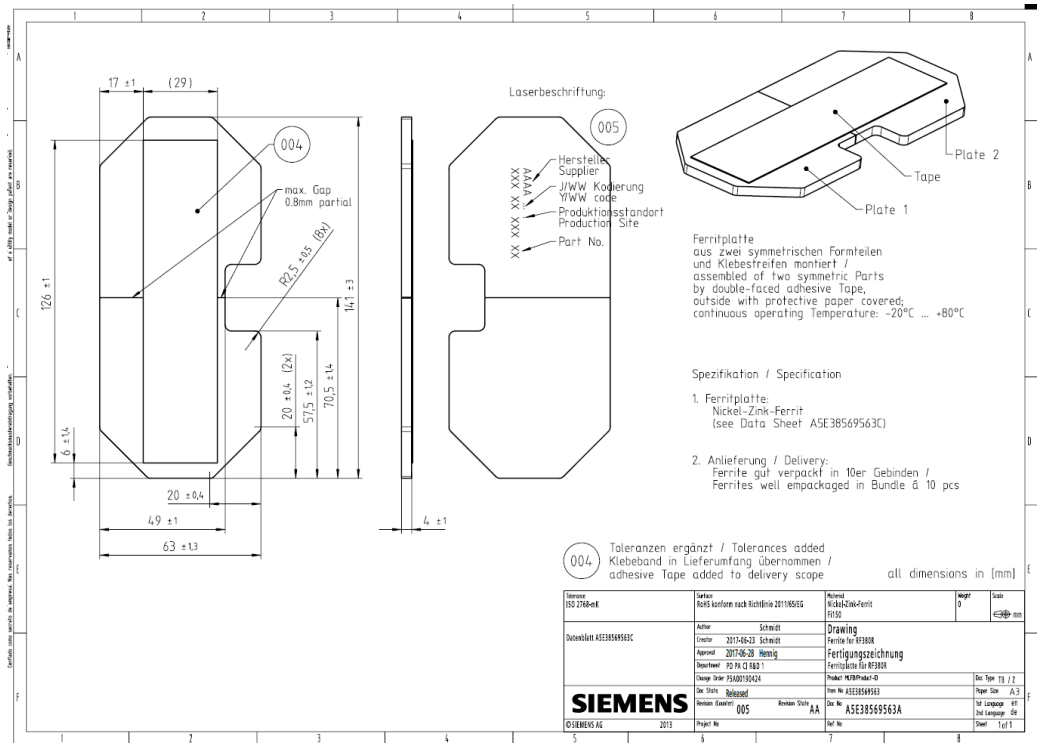

RF380R: Placement of ferrite plate on magnetic loop antenna