SIEMENS

SIMATIC Ident

RFID systems SIMATIC RF200

System Manual

Introduction 1

Safety notes 2

System overview 3

Planning the RF200 system 4

Readers 5

Antennas 6

Transponder 7

System integration 8

System diagnostics 9

Appendix A

03/2019

J31069-D0227-U001-A11-7619

Legal information

Warning notice system

This manual contains notices you have to observe in order to ensure your personal safety, as well as to prevent damage to property. The notices referring to your personal safety are highlighted in the manual by a safety alert symbol, notices referring only to property damage have no safety alert symbol. These notices shown below are graded according to the degree of danger.

⚠ DANGER

indicates that death or severe personal injury **will** result if proper precautions are not taken.

⚠ WARNING

indicates that death or severe personal injury **may** result if proper precautions are not taken.

⚠ CAUTION

indicates that minor personal injury can result if proper precautions are not taken.

NOTICE

indicates that property damage can result if proper precautions are not taken.

If more than one degree of danger is present, the warning notice representing the highest degree of danger will be used. A notice warning of injury to persons with a safety alert symbol may also include a warning relating to property damage.

Qualified Personnel

The product/system described in this documentation may be operated only by **personnel qualified** for the specific task in accordance with the relevant documentation, in particular its warning notices and safety instructions. Qualified personnel are those who, based on their training and experience, are capable of identifying risks and avoiding potential hazards when working with these products/systems.

Proper use of Siemens products

Note the following:

⚠ WARNING

Siemens products may only be used for the applications described in the catalog and in the relevant technical documentation. If products and components from other manufacturers are used, these must be recommended or approved by Siemens. Proper transport, storage, installation, assembly, commissioning, operation and maintenance are required to ensure that the products operate safely and without any problems. The permissible ambient conditions must be complied with. The information in the relevant documentation must be observed.

Trademarks

All names identified by ® are registered trademarks of Siemens AG. The remaining trademarks in this publication may be trademarks whose use by third parties for their own purposes could violate the rights of the owner.

Disclaimer of Liability

We have reviewed the contents of this publication to ensure consistency with the hardware and software described. Since variance cannot be precluded entirely, we cannot guarantee full consistency. However, the information in this publication is reviewed regularly and any necessary corrections are included in subsequent editions.

Siemens AG
Division Process Industries and Drives
Postfach 48 48
90026 NÜRNBERG
GERMANY

℗ 03/2019 Subject to change

Copyright © Siemens AG 2010 - 2019.
All rights reserved

Table of contents

1 Introduction 13

2 Safety notes 15

2.1 General safety instructions 15

3 System overview 19

3.1 RFID components and their function 20

3.2 Overview of transponders 24

4 Planning the RF200 system 27

4.1 Fundamentals of application planning 27
4.1.1 Selection criteria for SIMATIC RF200 components 27
4.1.2 Transmission window and read/write distance 27
4.1.3 Width of the transmission window 30
4.1.4 Impact of secondary fields 31
4.1.5 Permissible directions of motion of the transponder 34
4.1.6 Operation in static and dynamic mode 35
4.1.7 Dwell time of the transponder 36
4.1.8 Communication between communication module, reader and transponder 37

4.2 Field data of transponders and readers 38
4.2.1 Field data 39
4.2.2 Minimum clearances 56

4.3 Installation guidelines 60
4.3.1 Overview 60
4.3.2 Reduction of interference due to metal 60
4.3.3 Effects of metal on different transponders and readers 62
4.3.4 Impact of metal on the transmission window 63
4.3.4.1 RF210R 64
4.3.4.2 RF220R 67
4.3.4.3 RF240R 69
4.3.4.4 RF250R 72
4.3.4.5 RF260R 81
4.3.4.6 RF280R 83
4.3.4.7 RF285R 86
4.3.4.8 RF290R 91
4.3.5 Installation and connection of 2 to 6 antennas with one reader 97
4.3.5.1 Installation options with the antenna splitter (2-4 antennas) 98
4.3.5.2 Antenna installation 101

4.4 Chemical resistance of the reader and transponders 106
4.4.1 Readers 106
4.4.1.1 Overview of the readers and their housing materials 106
4.4.1.2 Polyester 107
4.4.1.3 Polymethylmethacrylate (PMMA) 108
4.4.1.4 Polyamide 6 and Polyamide 6.6 GF30 109

4.4.1.5 Polyamide 12 110
4.4.2 Transponder....112
4.4.2.1 Overview of the transponders and their housing materials 112
4.4.2.2 Epoxy resin 113
4.4.2.3 Polyamide 6 and Polyamide 6.6 GF30....116
4.4.2.4 Polycarbonate (PC) 117
4.4.2.5 Polyphenylene sulfide (PPS) 118
4.4.2.6 Polyvinyl chloride (PVC) 119

4.5 Further information 120

5 Readers 121

5.1 SIMATIC RF210R 122
5.1.1 Features....122
5.1.2 RF210R ordering data 122
5.1.3 Pin assignment RF210R with RS422 interface....123
5.1.4 LED operating display 123
5.1.5 Minimum distance between RF210R readers....124
5.1.6 Technical specifications....125
5.1.7 Approvals....126
5.1.8 Dimension drawing....127

5.2 SIMATIC RF210M....128
5.2.1 Features....128
5.2.2 Ordering data RF210M....128
5.2.3 Installing the RF210M reader....129
5.2.4 Pin assignment RF210M with RS-422 interface 130
5.2.5 LED operating display 130
5.2.6 Technical specifications....131
5.2.7 Approvals....132
5.2.8 Dimension drawing....133

5.3 SIMATIC RF220R 134
5.3.1 Features....134
5.3.2 RF220R ordering data 134
5.3.3 RF220R pin assignment with RS422 interface 135
5.3.4 LED operating display 135
5.3.5 Minimum distance between RF220R readers....136
5.3.6 Technical specifications....137
5.3.7 Approvals....138
5.3.8 Dimension drawing....139

5.4 SIMATIC RF240R 140
5.4.1 Features....140
5.4.2 RF240R ordering data 140
5.4.3 Pin assignment RF240R....141
5.4.4 LED operating display 141
5.4.5 Minimum distance between several RF240R readers 142
5.4.6 Technical specifications....143
5.4.7 Approvals....145
5.4.8 Dimension drawing....146

5.5 SIMATIC RF250R 147
5.5.1 Features....147
5.5.2 Ordering data RF250R 147

5.5.3 Pin assignment RF250R 148
5.5.4 LED operating display 148
5.5.5 Technical specifications 149
5.5.6 Approvals 151
5.5.7 Dimension drawing 152

5.6 SIMATIC RF260R 153
5.6.1 Features 153
5.6.2 Ordering data for RF260R 153
5.6.3 Pin assignment RF260R 154
5.6.4 LED operating display 154
5.6.5 Minimum distance between several RF260R 155
5.6.6 Technical specifications 156
5.6.7 Approvals 157
5.6.8 Dimension drawing 159

5.7 SIMATIC RF280R 160
5.7.1 Features 160
5.7.2 Ordering data RF280R 160
5.7.3 Pin assignment RF280R 161
5.7.4 LED operating display 161
5.7.5 Minimum distance between RF280R readers 162
5.7.6 Technical specifications 163
5.7.7 Approvals 164
5.7.8 Dimension drawing 166

5.8 SIMATIC RF285R 167
5.8.1 Characteristics 167
5.8.2 Ordering data 168
5.8.3 Pin assignment 169
5.8.4 LED operating display 169
5.8.5 Installing the RF285R reader 170
5.8.5.1 Wall mounting 170
5.8.5.2 Installing on the S7-300 standard rail 171
5.8.5.3 Installing on a standard mounting rail 171
5.8.6 Technical specifications 173
5.8.7 Approvals 174
5.8.8 Note on using the RF285R as a replacement for SLG D11 176
5.8.9 Dimension drawing 177

5.9 SIMATIC RF290R 178
5.9.1 Features 178
5.9.2 Ordering data 179
5.9.3 Pin assignment 180
5.9.4 LED operating display 182
5.9.5 Installing the RF290R reader 183
5.9.5.1 Wall mounting 183
5.9.5.2 Installing on the S7-300 standard rail 184
5.9.5.3 Installation on a DIN rail 184
5.9.6 Technical specifications 186
5.9.7 Approvals 187
5.9.8 Note on the use of the RF290R as a replacement for SLG D10 / SLG D10S 189
5.9.9 Dimension drawing 190

6 Antennas....191

6.1 ANT 1....191
6.1.1 Characteristics....191
6.1.2 Ordering data....191
6.1.3 Flush-mounted in metal....192
6.1.4 Minimum clearances....192
6.1.5 Technical specifications....194
6.1.6 Dimension drawing....195

6.2 ANT 3....196
6.2.1 Features....196
6.2.2 Ordering data....196
6.2.3 Mounting on/in metal....197
6.2.4 Minimum spacing....198
6.2.5 Technical data....199
6.2.6 Dimension drawing....200

6.3 ANT 3S....201
6.3.1 Features....201
6.3.2 Ordering data....201
6.3.3 Mounting on/in metal....202
6.3.4 Minimum spacing....203
6.3.5 Technical data....204
6.3.6 Dimension drawing....205

6.4 ANT 8....206
6.4.1 Features....206
6.4.2 Ordering data....206
6.4.3 Transmission window....207
6.4.4 Flush-mounted in metal....207
6.4.5 Minimum spacing....208
6.4.6 Technical data....209
6.4.7 Dimension drawing....210

6.5 ANT 12....211
6.5.1 Features....211
6.5.2 Ordering data....211
6.5.3 Transmission window....212
6.5.4 Flush-mounted in metal....212
6.5.5 Minimum spacing....213
6.5.6 Technical data....214
6.5.7 Dimension drawing....215

6.6 ANT 12 (stainless steel variant)....216
6.6.1 Features....216
6.6.2 Ordering data....216
6.6.3 Antenna connection....217
6.6.4 Transmission window....218
6.6.5 Flush-mounted in metal....219
6.6.6 Minimum spacing....219
6.6.7 Technical data....221
6.6.8 Dimension drawing....222

6.7 ANT 18....223
6.7.1 Features....223

6.7.2 Ordering data 223
6.7.3 Transmission window 224
6.7.4 Flush-mounted in metal 224
6.7.5 Minimum spacing 225
6.7.6 Technical data 226
6.7.7 Dimension drawing 227

6.8 ANT 18 (stainless steel variant) 228
6.8.1 Features 228
6.8.2 Ordering data 228
6.8.3 Antenna connection 229
6.8.4 Transmission window 230
6.8.5 Flush-mounted in metal 230
6.8.6 Minimum spacing 231
6.8.7 Technical data 232
6.8.8 Dimension drawing 234

6.9 ANT 30 235
6.9.1 Features 235
6.9.2 Ordering data 235
6.9.3 Transmission window 236
6.9.4 Flush-mounted in metal 237
6.9.5 Minimum spacing 237
6.9.6 Technical data 239
6.9.7 Dimension drawing 240

6.10 ANT 30 (stainless steel variant) 241
6.10.1 Features 241
6.10.2 Ordering data 241
6.10.3 Antenna connection 242
6.10.4 Transmission window 243
6.10.5 Flush-mounted in metal 244
6.10.6 Minimum spacing 244
6.10.7 Technical data 246
6.10.8 Dimension drawing 247

6.11 ANT D1 248
6.11.1 Characteristics 248
6.11.2 Ordering data 248
6.11.3 Flush mounting on/in metal 249
6.11.4 Minimum clearances 249
6.11.5 Technical specifications 251
6.11.6 Dimension drawing 252

6.12 ANT D5 253
6.12.1 Features 253
6.12.2 Ordering data 253
6.12.3 Transmission window 254
6.12.4 Flush-mounted in metal 255
6.12.5 Minimum spacing 255
6.12.6 Technical data 257
6.12.7 Dimension drawing 258

6.13 ANT D6 259
6.13.1 Features 259

6.13.2 Ordering data 259
6.13.3 Transmission window 260
6.13.4 Metal-free area 261
6.13.5 Minimum distance 261
6.13.6 Technical data 262
6.13.7 Dimensional diagram 263

6.14 ANT D10 264
6.14.1 Features 264
6.14.2 Ordering data 264
6.14.3 Transmission window 265
6.14.4 Metal-free area 266
6.14.5 Minimum distance 267
6.14.6 Technical data 267
6.14.7 Dimensional diagram 269

7 Transponder 271

7.1 Memory configuration of ISO the transponders 271

7.2 MDS D100 272
7.2.1 Characteristics 272
7.2.2 Ordering data 273
7.2.3 Metal-free area 273
7.2.4 Technical data 275
7.2.5 Dimension drawing 276

7.3 MDS D117 277
7.3.1 Features 277
7.3.2 Ordering data 277
7.3.3 Mounting in metal 277
7.3.4 Technical specifications 278
7.3.5 Dimension drawing 279

7.4 MDS D124 280
7.4.1 Characteristics 280
7.4.2 Ordering data 280
7.4.3 Mounting on metal 281
7.4.4 Technical specifications 282
7.4.5 Using the MDS D124 in hazardous areas 284
7.4.6 EC declaration of conformity according to directive 2014/34/EU MDS D124 286
7.4.7 Dimension drawing 286

7.5 MDS D126 287
7.5.1 Characteristics 287
7.5.2 Ordering data 287
7.5.3 Mounting on metal 288
7.5.4 Technical specifications 289
7.5.5 Dimension drawing 290

7.6 MDS D127 291
7.6.1 Features 291
7.6.2 Ordering data 291
7.6.3 Mounting in metal 292
7.6.4 Technical specifications 293
7.6.5 Dimension drawing 294

7.7 MDS D139 295
7.7.1 Characteristics 295
7.7.2 Ordering data 295
7.7.3 Metal-free area 296
7.7.4 Mounting in metal 297
7.7.5 Cleaning the transponder 297
7.7.6 Technical specifications 298
7.7.7 Using the MDS D139 in hazardous areas 300
7.7.8 Dimension drawings 302

7.8 MDS D160 303
7.8.1 Characteristics 303
7.8.2 Ordering data 303
7.8.3 Mounting on metal 304
7.8.4 Technical specifications 305
7.8.5 Dimension drawings 307

7.9 MDS D165 308
7.9.1 Features 308
7.9.2 Ordering data 308
7.9.3 Technical data 309
7.9.4 Dimension drawing 310

7.10 MDS D200 311
7.10.1 Features 311
7.10.2 Ordering data 311
7.10.3 Mounting on metal 312
7.10.4 Technical data 314
7.10.5 Dimension drawing 315

7.11 MDS D261 316
7.11.1 Features 316
7.11.2 Ordering data 316
7.11.3 Technical data 317
7.11.4 Dimension drawing 318

7.12 MDS D324 319
7.12.1 Characteristics 319
7.12.2 Ordering data 319
7.12.3 Mounting on metal 320
7.12.4 Technical specifications 321
7.12.5 Dimension drawing 322

7.13 MDS D339 323
7.13.1 Characteristics 323
7.13.2 Ordering data 323
7.13.3 Mounting on metal 324
7.13.4 Mounting in metal 325
7.13.5 Cleaning the transponder 325
7.13.6 Technical specifications 326
7.13.7 Using the MDS D339 in hazardous areas 328
7.13.8 Dimensional drawing 330

7.14 MDS D400 331
7.14.1 Features 331
7.14.2 Ordering data 331

7.14.3 Mounting on metal 332
7.14.4 Technical specifications 334
7.14.5 Dimension drawing 335

7.15 MDS D421 336
7.15.1 Characteristics 336
7.15.2 Ordering data 336
7.15.3 Mounting on metal 337
7.15.4 Technical specifications 339
7.15.5 Dimension drawing 341

7.16 MDS D422 342
7.16.1 Characteristics 342
7.16.2 Ordering data 342
7.16.3 Mounting in metal 342
7.16.4 Technical specifications 343
7.16.5 Dimension drawing 344

7.17 MDS D423 345
7.17.1 Characteristics 345
7.17.2 Ordering data 345
7.17.3 Mounting on metal 346
7.17.4 Technical specifications 347
7.17.5 Dimensional drawing 349

7.18 MDS D424 350
7.18.1 Characteristics 350
7.18.2 Ordering data 350
7.18.3 Mounting on metal 351
7.18.4 Technical specifications 352
7.18.5 Dimension drawing 353

7.19 MDS D425 354
7.19.1 Characteristics 354
7.19.2 Ordering data 354
7.19.3 Application example 355
7.19.4 Technical specifications 355
7.19.5 Dimension drawing 357

7.20 MDS D426 358
7.20.1 Characteristics 358
7.20.2 Mounting on metal 358
7.20.3 Ordering data 359
7.20.4 Technical specifications 360
7.20.5 Dimension drawing 361

7.21 MDS D428 362
7.21.1 Characteristics 362
7.21.2 Ordering data 362
7.21.3 Application example 363
7.21.4 Technical specifications 363
7.21.5 Dimension drawing 365

7.22 MDS D460 366
7.22.1 Characteristics 366
7.22.2 Ordering data 366

7.22.3 Mounting on metal 367
7.22.4 Technical specifications 368
7.22.5 Dimension drawings 369

7.23 MDS D521 370
7.23.1 Characteristics 370
7.23.2 Ordering data 370
7.23.3 Mounting on metal 370
7.23.4 Technical specifications 373
7.23.5 Dimension drawing 374

7.24 MDS D522 375
7.24.1 Characteristics 375
7.24.2 Ordering data 375
7.24.3 Mounting in metal 375
7.24.4 Technical specifications 376
7.24.5 Dimension drawing 377

7.25 MDS D522 special variant 378
7.25.1 Characteristics 378
7.25.2 Ordering data 378
7.25.3 Mounting in metal 379
7.25.4 Installation instructions 379
7.25.5 Technical specifications 381
7.25.6 Dimensional drawing 383

7.26 MDS D524 384
7.26.1 Characteristics 384
7.26.2 Ordering data 384
7.26.3 Mounting on metal 385
7.26.4 Technical specifications 386
7.26.5 Dimension drawing 387

7.27 MDS D525 388
7.27.1 Characteristics 388
7.27.2 Ordering data 388
7.27.3 Application example 389
7.27.4 Technical specifications 389
7.27.5 Dimension drawing 391

7.28 MDS D526 392
7.28.1 Characteristics 392
7.28.2 Ordering data 392
7.28.3 Mounting on metal 393
7.28.4 Technical specifications 394
7.28.5 Dimension drawing 395

7.29 MDS D528 396
7.29.1 Characteristics 396
7.29.2 Ordering data 396
7.29.3 Application example 397
7.29.4 Technical specifications 397
7.29.5 Dimension drawing 399

7.30 MDS D560 400
7.30.1 Characteristics 400

7.30.2 Ordering data 400
7.30.3 Mounting on metal 401
7.30.4 Technical specifications 402
7.30.5 Dimension drawings 403

8 System integration 405

9 System diagnostics 409

9.1 Error codes of the RF200 readers 409

9.2 Diagnostics functions - STEP 7 411
9.2.1 Reader diagnostics with "Reader Status" (SLG Status) 411
9.2.2 Transponder diagnostics with "Tag Status" (MDS Status) 413

A Appendix 415

A.1 Certificates & approvals 415

A.2 Accessories 418
A.2.1 Antenna splitter 418
A.2.2 Wide-range power supply unit for SIMATIC RF systems 420
A.2.2.1 Features 420
A.2.2.2 Scope of supply 420
A.2.2.3 Ordering data 421
A.2.2.4 Safety Information 422
A.2.2.5 Mounting & connecting 423
A.2.2.6 Pin assignment of DC outputs and mains connection 427
A.2.2.7 Technical specifications 427
A.2.2.8 Dimension drawing 430
A.2.2.9 Certificates and approvals 431
A.2.3 Transponder holders 433

A.3 Connecting cable 440
A.3.1 RF2xxR reader (RS-422) with ASM 456 / RF160C / RF170C / RF180C / RF18xC / RF182C 440
A.3.2 Reader RF2xxR (RS-422) with ASM 475 442
A.3.3 Reader RF2xxR (RS-422) with RF120C 443
A.3.4 RF240R/RF260R/RF285R/RF290R (RS232) readers with PC 444
A.3.5 RF285R/RF290R readers 445

A.4 Ordering data 446

A.5 Service & Support 458

Introduction 1

SIMATIC RF200 is a compact RFID system in the SIMATIC RFID product family. The product range comprises cost-efficient RF readers that are ideal for use in small assembly lines or in intralogistics. SIMATIC RF200 RFID readers only support the RFID standard ISO 15693 and are therefore ideal for operation with the extensive range of ISO 15693 transponders.

The readers of the RF200 product family are available with the following interfaces:

- RS-422 for connecting to the communications modules
- RS-232 with a simple ASCII protocol for connection to PCs and third-party controllers
- IO-Link for connection to IO Link masters from Siemens and third-party controllers

Readers with an internal antenna have a particularly compact design (RF210R/RF220R/RF240R/RF260R). RF250R, RF285R and RF290R are designed for operation with external antennas either to achieve longer distances or larger field sizes (RF285R and RF290R with ANT D1/D5/D6/D10) or to allow installation where there is very little space (RF250R with ANT 3/3S/8/12/18/30).

Scope of validity of this document

This documentation is valid for all variants of the SIMATIC RF200 system and describes the devices shipped as of March 2019.

Additional information

You will find additional information on the devices listed in this manual and their configuration and parameter assignment in the following manuals:

- Function manual "Ident profile and Ident blocks, standard function for Ident systems"
- Function manual "FB 45 for MOBY U, MOBY D, RF200, RF300"
- Operating Instructions "SIMATIC RF200 IO-Link"
- System manual "MOBY D"
- Operating Instructions "Mobile reader RF350M"
- Product information "SIMATIC RF200 command set"

You will find the latest versions of these manuals on the pages of the Siemens Industry Online Support (https://support.industry.siemens.com/cs/ww/en/ps/14971/man).

Registered trademarks

SIMATIC®, SIMATIC RF®, MOBY®, RF MANAGER® and SIMATIC Sensors® are registered trademarks of Siemens AG.

Recycling and disposal

The products are low in harmful substances, can be recycled and meet the requirements of the Directive 2012/19/EU for disposal of waste electrical and electronic equipment (WEEE).

Do not dispose of the products at public disposal sites.

For environmentally compliant recycling and disposal of your electronic waste, please contact a company certified for the disposal of electronic waste or your Siemens representative.

Note the different country-specific regulations.

History

The following issues of the SIMATIC RF200 system manual have been published:

Output	Note
03/2011	First edition
...	...
07/2015	Expansion of the documentation by the following: • ANT 3 antennas • MDS D5xx transponder • Mobile reader RF210R
07/2017	Expansion of the documentation by the following: • Reader RF280R • Mobile Reader RF350M
xx/2019	Expansion of the documentation by the following: • Reader RF285R • Antenna ANT 3S, ANT D1 • Antennas ANT 12, ANT 18, ANT 30 (stainless steel variants) • MDS D525 / MDS D560 transponders

Abbreviations and naming conventions

The following terms/abbreviations are used synonymously in this document:

Reader	Write/read device (SLG)
Transponder, tag	Data carrier, mobile data storage, (MDS)
Communications module (CM)	Interface module (ASM)

Safety notes 2

2.1 General safety instructions

SIMATIC RFID products comply with the salient safety specifications acc. to IEC, VDE, EN, UL and CSA. If you have questions about the permissibility of the installation in the planned environment, please contact your service representative.

⚠ WARNING
Opening the device Do not open the device when when the power supply is on. Unauthorized opening of and improper repairs to the device may result in substantial damage to equipment or risk of personal injury to the user.

NOTICE
Alterations not permitted Alterations to the devices are not permitted. Failure to observe this requirement shall constitute a revocation of the radio equipment approval, CE approval and manufacturer's warranty.

Installation instructions

NOTICE
Switch/fuse to disconnect the reader from the power supply Make sure that the readers can be disconnected from the power supply with a switch or a fuse. The function of the switch or fuse must be clearly recognizable.

Operating temperature

⚠ CAUTION
Danger of burns Note that some outer components of the reader are made of metal. Depending on the environmental conditions temperatures can occur on the device that are higher than the maximum permitted operating temperature.

Repairs

WARNING

Repairs only by authorized qualified personnel

Repairs may only be carried out by authorized qualified personnel. Unauthorized opening of and improper repairs to the device may result in substantial damage to equipment or risk of personal injury to the user.

System expansions

Only install system expansions intended for this system. If you install other expansions, you may damage the system or violate the safety requirements and regulations for radio frequency interference suppression. Contact Technical Support or your local sales department to find out which system expansions are suitable for installation.

NOTICE

Warranty conditions

If you cause system defects by installing or exchanging system expansion devices, the warranty becomes void.

Safety distances

CAUTION

Safety distance between reader/antenna and persons

Note that for permanent exposure, the following safety distances must be adhered to:

- RF210R: ≥ 25 mm
- RF220R: ≥ 50 mm
- RF240R: ≥ 100 mm
- RF250R + ANT 1: ≥ 120 mm
- RF250R + ANT 3 or ANT 30: ≥ 50 mm
- RF250R + ANT 3S or ANT 12: ≥ 25 mm
- RF250R + ANT 18: ≥ 40 mm
- RF260R: ≥ 120 mm
- RF280R: ≥ 250 mm
- RF285R + ANT D1: ≥ 250 mm
- RF285R + ANT D5: ≥ 400 mm
- RF285R + ANT D6: ≥ 450 mm
- RF290R + ANT D1: ≥ 250 mm (max. 2 W permissible)
- RF290R + ANT D5: ≥ 450 mm
- RF290R + ANT D6: ≥ 600 mm
- RF290R + ANT D10: ≥ 600 mm

Note

Safety distance with pacemakers

An increased safety distance between reader/antenna and persons with pacemakers is not necessary.

Security information

Siemens provides products and solutions with industrial security functions that support the secure operation of plants, systems, machines and networks.

In order to protect plants, systems, machines and networks against cyber threats, it is necessary to implement – and continuously maintain – a holistic, state-of-the-art industrial security concept. Siemens' products and solutions constitute one element of such a concept.

Customers are responsible for preventing unauthorized access to their plants, systems, machines and networks. Such systems, machines and components should only be connected to an enterprise network or the internet if and to the extent such a connection is necessary and only when appropriate security measures (e.g. firewalls and/or network segmentation) are in place.

For additional information on industrial security measures that may be implemented, please visit
Link: (http://www.siemens.com/industrialsecurity)

Siemens' products and solutions undergo continuous development to make them more secure. Siemens strongly recommends that product updates are applied as soon as they are available and that the latest product versions are used. Use of product versions that are no longer supported, and failure to apply the latest updates may increase customers' exposure to cyber threats.

To stay informed about product updates, subscribe to the Siemens Industrial Security RSS Feed under
Link: (http://www.siemens.com/industrialsecurity)

System overview

3

SIMATIC RF200 is an inductive identification system that is compatible with the ISO 15693 standard and was specially designed for use in industrial production for the control and optimization of material flows.

In contrast to SIMATIC RF300, SIMATIC RF200 is intended for RFID applications where performance requirements are not very high, for example with regard to data volume, transfer rate or diagnostics options. SIMATIC RF200 is characterized by particularly favorable prices.

3.1 RFID components and their function

RF200 system components

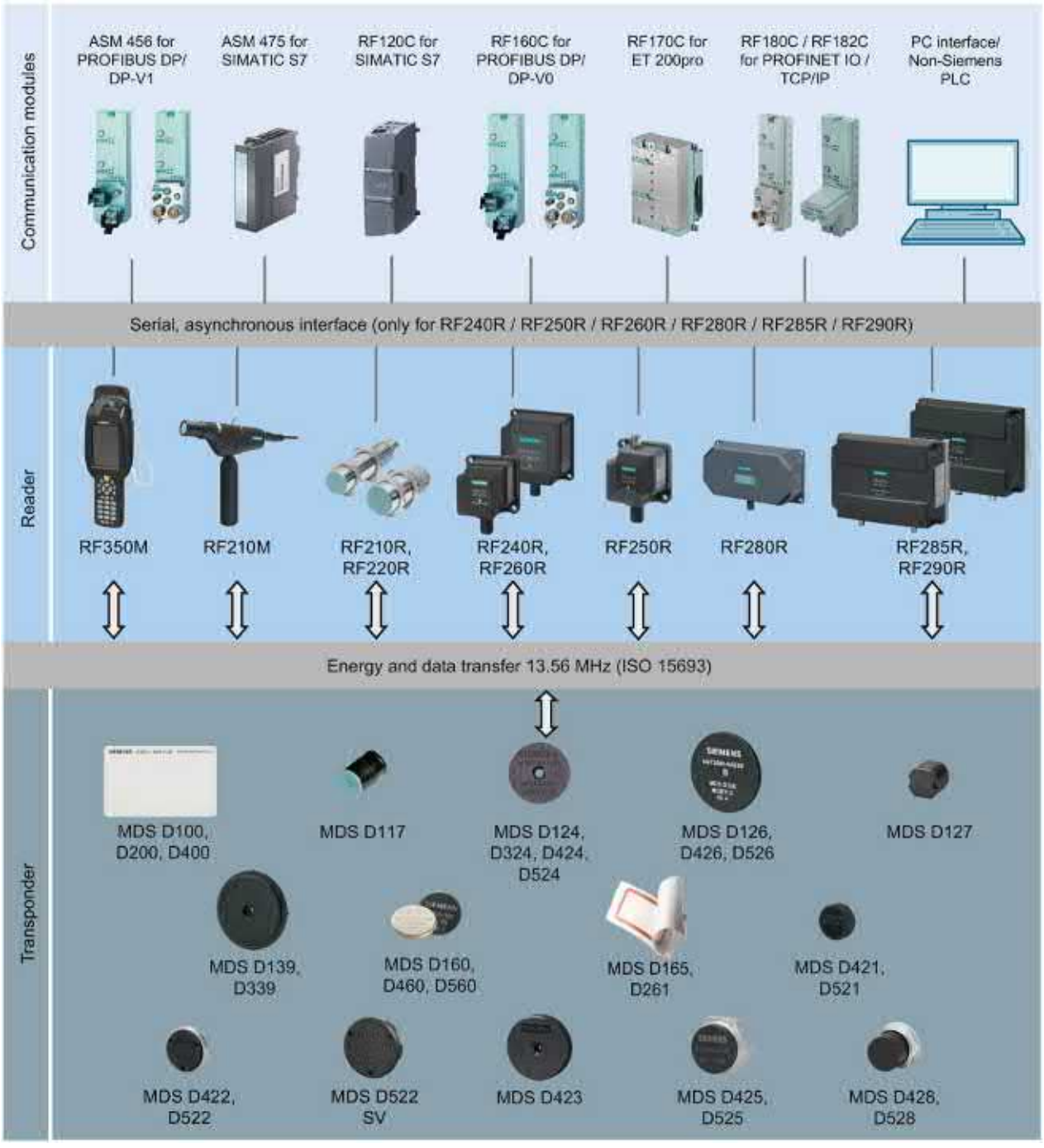

Figure 3-1 RF200 system overview

Table 3- 1 Reader-transponder combination options - Part 1

Transponder	RF210R/ RF210M	RF220R	RF240R	RF260R	RF280R	RF350M
MDS D100	--	○	✓	✓	✓	✓
MDS D117	○	--	--	--	--	✓ 6)
MDS D124	✓	✓	✓	✓	✓	✓
MDS D126	--	✓	✓	✓	✓	✓
MDS D127	✓	--	--	--	--	✓ 6)
MDS D139 1)	--	○	○	✓	✓	✓
MDS D160 2)	✓	✓	✓	✓	✓	✓
MDS D165	--	○	✓	✓	✓	✓
MDS D200	--	○	✓	✓	✓	✓
MDS D261	--	○	✓	✓	✓	✓
MDS D324	✓	✓	✓	✓	✓	✓
MDS D339	--	○	○	✓	✓	✓
MDS D400	--	--	✓	✓	✓	✓
MDS D421	✓	○	--	--	--	✓ 6)
MDS D422	✓	✓	✓	--	--	✓ 6)
MDS D423	✓	✓	✓	✓	✓	✓
MDS D424	✓	✓	✓	✓	✓	✓
MDS D425	✓	✓	✓	--	✓	✓
MDS D426	--	✓	✓	✓	✓	✓
MDS D428	✓	✓	✓	✓	✓	✓
MDS D460	✓	✓	✓	✓	✓	✓
MDS D521	✓	○	--	--	--	✓ 6)
MDS D522 3)	✓	✓	✓	--	--	✓ 6)
MDS D524	✓	✓	✓	✓	✓	✓
MDS D525	✓	✓	✓	--	✓	--
MDS D526	--	✓	✓	✓	✓	✓
MDS D528	✓	✓	✓	✓	✓	✓
MDS D560	✓	✓	✓	✓	✓	✓

1) only with the article number 6GT2600-0AA10

2) only with the article number 6GT2600-0AB10

3) The transponder MDS D522 special variant has the same compatibility as the transponder MDS D522.

4) in conjunction with ANT D5, D6 or D10

5) combination recommended only in conjunction with ANT D5.

6) Only in conjunction with RF350M for external antennas (6GT2803-1BA10)

✓ Combination possible

-- Combination not possible

○ Combination possible, but not recommended

Table 3- 2 Reader-transponder combination options - Part 2

Transponder	RF250R with						
	ANT 1	ANT 3	ANT 3S	ANT 8	ANT 12	ANT 18	ANT 30
MDS D100	✓	--	--	--	--	--	○
MDS D117	--	--	✓	✓	✓	--	--
MDS D124	✓	✓	--	--	--	✓	✓
MDS D126	✓	✓	--	--	--	--	✓
MDS D127	--	--	✓	✓	✓	--	--
MDS D139	✓	--	--	--	--	--	○
MDS D160	✓	✓	--	--	✓	✓	✓
MDS D165	✓	--	--	--	--	--	○
MDS D200	✓	--	--	--	--	--	○
MDS D261	✓	--	--	--	--	--	○
MDS D324	✓	✓	--	--	○	✓	✓
MDS D339	✓	--	--	--	--	--	○
MDS D400	✓	--	--	--	--	--	○
MDS D421	--	--	✓	✓	✓	✓	--
MDS D422	--	✓	--	--	✓	✓	✓
MDS D423	✓	✓	--	--	--	✓	✓
MDS D424	✓	✓	--	--	--	✓	✓
MDS D425	✓	✓	--	--	✓	✓	✓
MDS D426	✓	✓	--	--	✓	✓	✓
MDS D428	✓	✓	--	--	✓	✓	✓
MDS D460	✓	✓	--	--	✓	✓	✓
MDS D521	--	--	✓	✓	✓	✓	--
MDS D522	--	✓	--	--	✓	✓	✓
MDS D524	✓	✓	--	○	○	✓	✓
MDS D525	✓	✓	--	--	✓	✓	○
MDS D526	✓	✓	--	--	--	--	✓
MDS D528	✓	✓	--	--	✓	✓	✓
MDS D560	✓	✓	--	--	✓	✓	✓

✓ Combination possible
-- Combination not possible
○ Combination possible, but not recommended

Table 3- 3 Reader-transponder combination options - Part 3

Transponder	RF285R with			RF290R with			
	ANT D1	ANT D5	ANT D6	ANT D1	ANT D5	ANT D6	ANT D10
MDS D100	✓	✓	✓	✓	✓	✓	✓
MDS D117	--	--	--	--	--	--	--
MDS D124	✓	✓	✓	✓	✓	✓	✓
MDS D126	✓	✓	✓	✓	✓	✓	✓
MDS D127	--	--	--	--	--	--	--
MDS D139	✓	✓	✓	✓	✓	✓	✓
MDS D160	✓	✓	○	✓	✓	○	○
MDS D165	✓	✓	✓	✓	✓	✓	✓
MDS D200	✓	✓	✓	✓	✓	✓	✓
MDS D261	✓	✓	✓	✓	✓	✓	✓
MDS D324	✓	✓	✓	✓	✓	✓	✓
MDS D339	✓	✓	✓	✓	✓	✓	✓
MDS D400	✓	✓	✓	✓	✓	✓	✓
MDS D421	--	--	--	--	--	--	--
MDS D422	--	--	--	--	--	--	--
MDS D423	✓	--	--	✓	--	--	--
MDS D424	✓	✓	✓	✓	✓	✓	✓
MDS D425	✓	--	--	✓	--	--	--
MDS D426	✓	✓	✓	✓	✓	✓	✓
MDS D428	✓	--	--	✓	--	--	--
MDS D460	✓	✓	○	✓	✓	○	○
MDS D521	--	--	--	--	--	--	--
MDS D522	○	--	--	○	--	--	--
MDS D524	✓	✓	✓	✓	✓	✓	✓
MDS D525	✓	--	--	✓	--	--	--
MDS D526	✓	✓	✓	✓	✓	✓	✓
MDS D528	✓	--	--	✓	--	--	--
MDS D560	✓	✓	○	✓	✓	○	○

✓ Combination possible
-- Combination not possible
○ Combination possible, but not recommended

3.2 Overview of transponders

Overview of typical areas of application of ISO transponders for RF200

Transponder	Area of application
MDS D100	From simple identification such as electronic barcode replacement or supplementation, through warehouse and distribution logistics, right up to product identification. With this transponder, the maximum ranges are achieved in combination with the SIMATIC RF260R reader.
MDS D117	Very compact data carrier that can be cemented into objects where precise positioning is necessary. e.g. tool identification.
MDS D124	Application areas in factory automation (e.g. small paintshops to 180°C).
MDS D126	Compact and rugged ISO transponder; suitable for identification of transport units in production-related logistics; can also be deployed in harsh conditions.
MDS D127	Very compact data carrier that can be screwed into areas where precise positioning is necessary. e.g. tool identification.
MDS D139 [1)]	Applications in production automation with high temperature demands (up to +220 °C). Typical application areas: • Paintshops and their preparatory treatments • Primer coat, electrolytic dip area, cataphoresis with the associated drying furnaces • Top coat area with drying furnaces • Washing areas at temperatures > 85 °C • Other applications with higher temperatures
MDS D160 [2)]	Typical applications are, for example: • Rented work clothing • Hotel laundry • Surgical textiles • Hospital clothing • Dirt collection mats • Clothing for nursing homes/hostels • Assembly lines with very small workpiece holders
MDS D165	Smart label (self-adhesive label) From simple identification such as electronic barcode replacement/supplementation, through warehouse and distribution logistics, right up to product identification
MDS D200	From simple identification such as electronic barcode replacement/supplementation, through warehouse and distribution logistics, right up to product identification.
MDS D261	Smart label (self-adhesive label) The design of the transponder (self-adhesive label) permits a variety of designs in order to ensure optimum dimensioning for the widest variety of applications. From simple identification such as electronic barcode replacement/supplementation, through warehouse and distribution logistics, right up to product identification.
MDS D324	Production and distribution logistics as well as in assembly and production lines
MDS D339	Applications in production automation with high temperature demands (up to +220 °C). For typical areas of application, see "MDS D139".

Transponder	Area of application
MDS D400	Simple identification such as electronic barcode replacement/supplements, from warehouse and distribution logistics right through to product identification.
MDS D421	The MDS D421 is designed for tool coding according to DIN 69873. It can be used wherever small data carriers and exact positioning are required, e.g. tool identification, workpiece holders
MDS D422	Identification of metallic workpiece holders, workpieces or containers
MDS D423	Identification of metallic workpiece holders, workpieces or containers, production automation
MDS D424	Production and distribution logistics as well as in assembly and production lines
MDS D425	Compact and rugged ISO transponder; suitable for screw mounting. Use in assembly and production lines in the powertrain sector; ideal for mounting on motors, gearboxes, and workpiece holders
MDS D426	Compact and rugged ISO transponder; suitable for identification of transport units in production-related logistics; can also be deployed in harsh conditions
MDS D428	Compact and rugged ISO transponder; suitable for screw mounting Use in assembly and production lines in the powertrain sector
MDS D460	Assembly lines with very small workpiece holders
MDS D521	The MDS D521 is constructed for tool coding according to DIN 69873. It can be used wherever small data carriers and exact positioning are required, e.g. tool identification, workpiece holders.
MDS D522	Identification of metallic workpiece holders, workpieces or containers
MDS D522 Special variants	If Identification of metallic workpiece holders or workpieces
MDS D524	Production and distribution logistics as well as in assembly and production lines
MDS D526	Compact and rugged ISO transponder; suitable for identification of transport units in production-related logistics; can also be deployed in harsh environmental conditions
MDS D528	Compact and rugged ISO transponder; suitable for screw mounting Use in assembly and production lines in the powertrain sector
MDS D560	Assembly lines with very small workpiece holders

1) Only with the MLFB 6GT2600-0AA10

2) Only with the MLFB 6GT2600-0AB10

Overview of the memory sizes of the ISO transponders for RF200

Transponder	Memory size
MDS D1xx	112 bytes of EEPROM
MDS D2xx	256 bytes of EEPROM
MDS D3xx	992 bytes of EEPROM
MDS D4xx	2000 bytes FRAM
MDS D5xx	8192 bytes FRAM

Planning the RF200 system 4

4.1 Fundamentals of application planning

4.1.1 Selection criteria for SIMATIC RF200 components

Assess your application according to the following criteria, in order to choose the right SIMATIC RF200 components:

- Static or dynamic data transfer
- Data volume to be transferred
- Speed in case of dynamic transfer
- Ambient conditions such as relative humidity, temperature, chemical impacts, etc.

Selection with the help of the TIA Selection Tool

Using the free "TIA Selection Tool (https://w3.siemens.com/mcms/topics/en/simatic/tia-selection-tool/Seiten/tab.aspx)" configurator, you can easily combine all relevant Ident products into a complete system. The TIA Selection Tool supports you during product selection or product configuration and can create a complete order list based on your information.

4.1.2 Transmission window and read/write distance

The reader generates an inductive alternating field. The field is strongest close to the reader; however, a read/write distance of "zero" between reader and transponder is not recommended.

The field strength of the alternating field decreases quickly in proportion to the distance from the reader. The distribution of the field depends on the structure and geometry of the antennas in the reader and transponder

A prerequisite for the function of the transponder is a minimum field strength at the transponder, which is still barely achieved at distance S_g from the reader.

The picture below shows the transmission window of the SIMATIC RF210R and SIMATIC RF220R readers between transponder and reader:

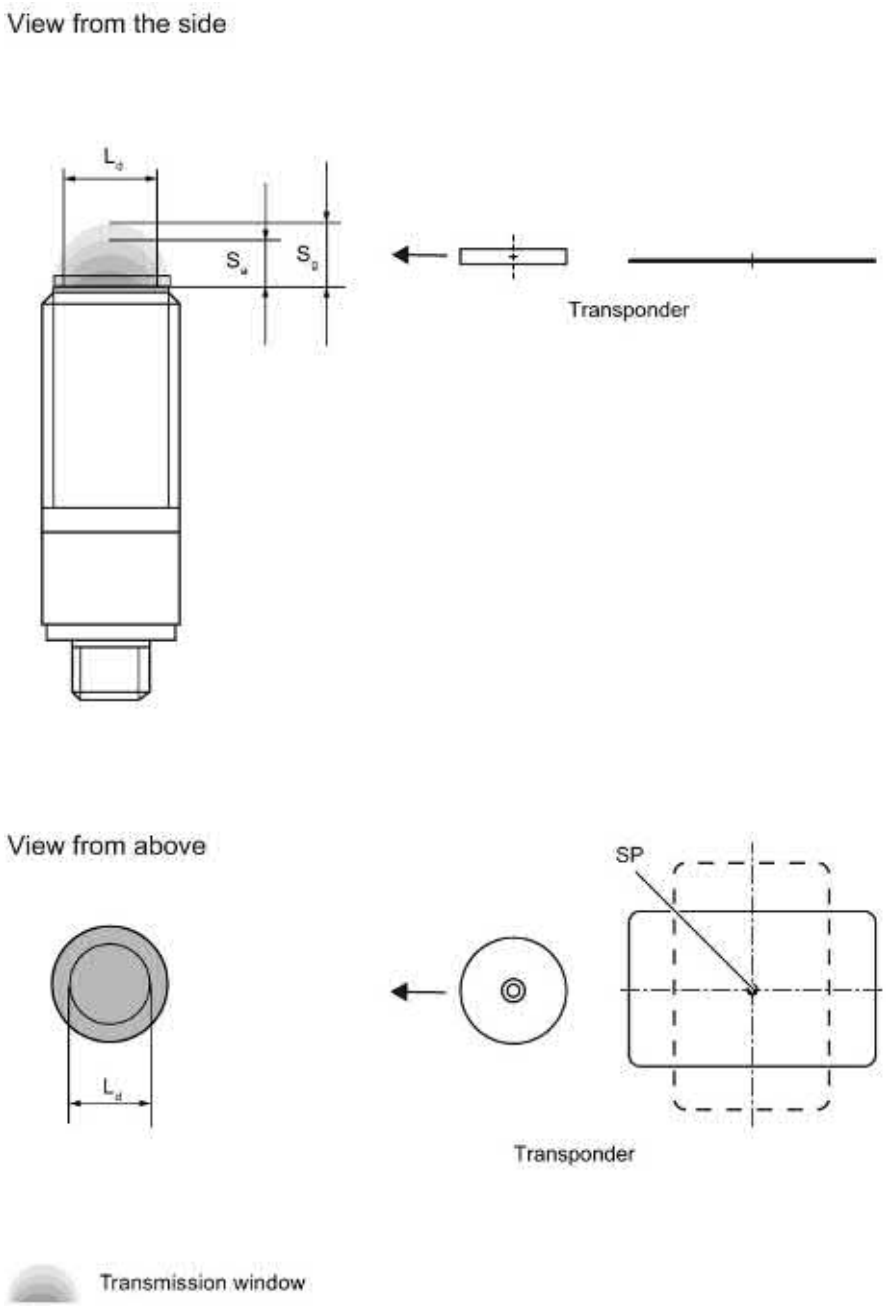

S_a Operating distance between transponder and reader

S_g Limit distance (maximum clear distance between upper surface of the reader and the transponder, at which the transmission can still function under normal conditions)

L Diameter of a transmission window

SP Intersection of the axes of symmetry of the transponder

Figure 4-1 RF210R/RF220R transmission window

The figure below shows the transmission window of the SIMATIC RF240R and SIMATIC RF260R readers between transponder and reader:

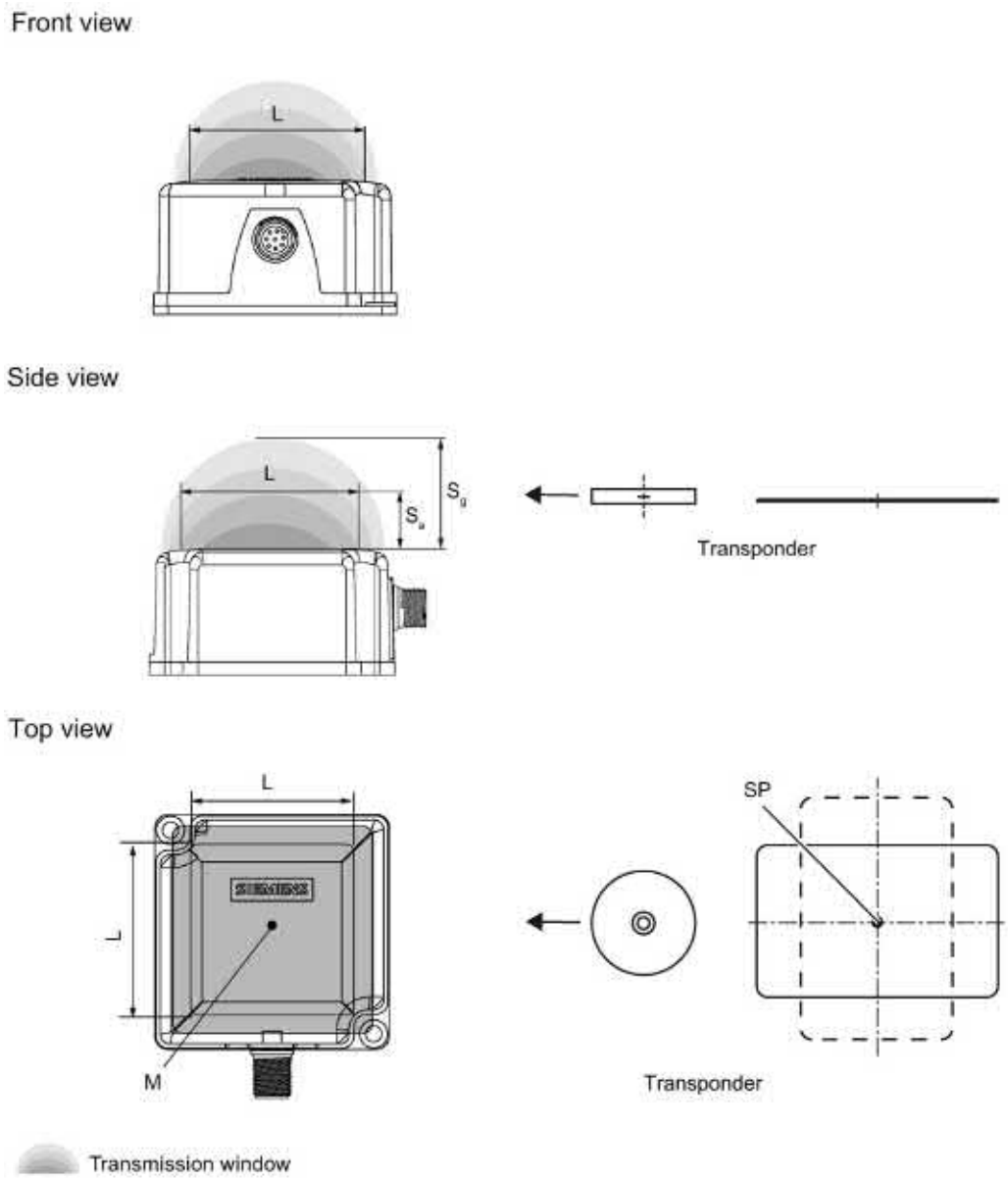

S_a Operating distance between transponder and reader

S_g Limit distance (maximum clear distance between upper surface of the reader and the transponder, at which the transmission can still function under normal conditions)

L Length of a transmission window

M Field centerpoint

Figure 4-2 RF240R/RF260R transmission window

The transponder can be used as soon as the intersection (SP) of the transponder enters the area of the transmission window.

From the diagrams above, it can also be seen that operation is possible within the area between S_a and S_g. The active operating area reduces as the distance increases, and

shrinks to a single point at distance S_g. Only static mode should thus be used in the area between S_a and S_g.

4.1.3 Width of the transmission window

Determining the width of the transmission window

The following approximation formula can be used for practical applications:

$$B = 0{,}4 \cdot L$$

W: Width of the transmission window

L: Length of the transmission window

Tracking tolerance

The width of the transmission window (W) is particularly important for the mechanical tracking tolerance. The formula for the dwell time is valid without restriction when W is observed.

4.1.4 Impact of secondary fields

Secondary fields in the range from 0 mm to 30% of the limit distance (S_g) generally always exist.
They should, however, only be used during configuration in exceptional cases, since the read/write distances are very limited. Exact details of the secondary field geometry cannot be given, since these values depend heavily on the operating distance and the application.
When working in dynamic mode, remember that during the transition from the secondary field to the main field the presence of the tag is lost temporarily. It is therefore advisable to select a distance > 30 % of S_g.

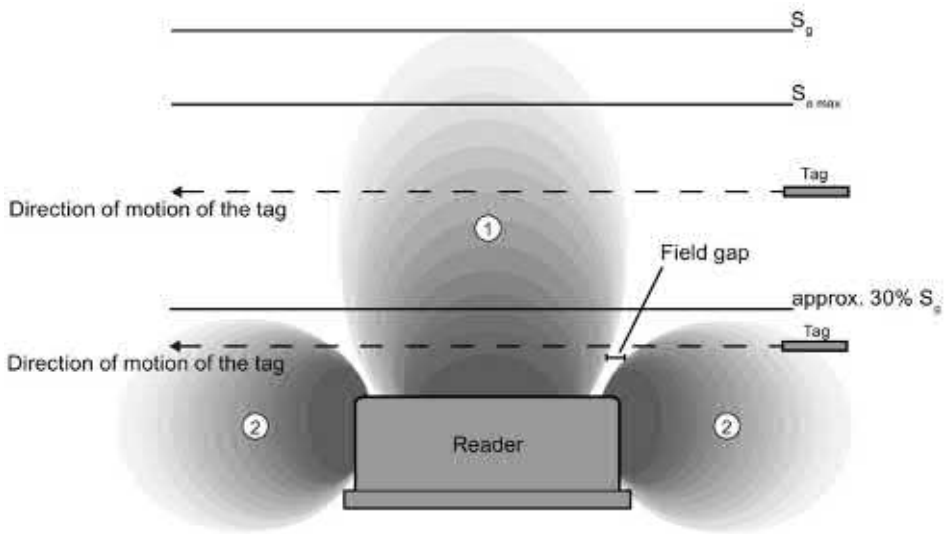

① Main field
② Secondary field

Figure 4-3 Gap in the field resulting from secondary fields

Secondary fields without shielding

The following graphic shows typical primary and secondary fields, if no shielding measures are taken.

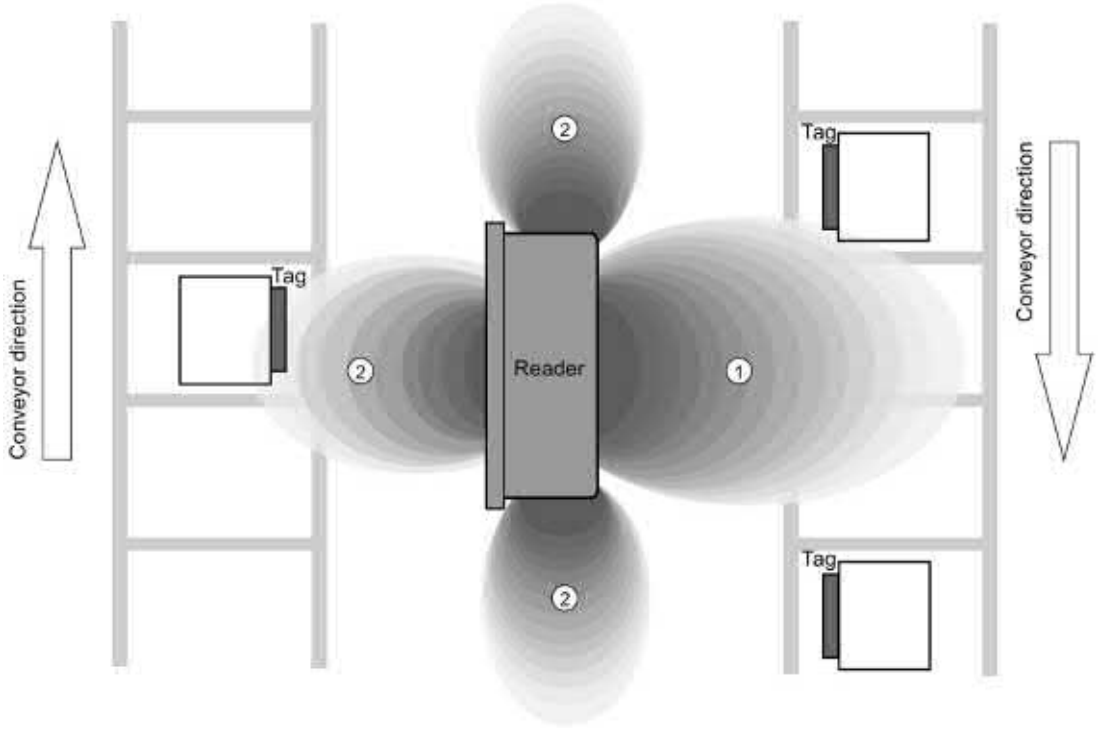

① Main field

② Secondary field

Figure 4-4 Secondary field without shielding

In this arrangement, the reader can also read tags via the secondary field. Shielding is required in order to prevent unwanted reading via the secondary field, as shown and described in the following.

Secondary fields with shielding

The following graphic shows typical primary and secondary fields, with metal shielding this time.

The metal shielding prevents the reader from detecting tags via the secondary field.

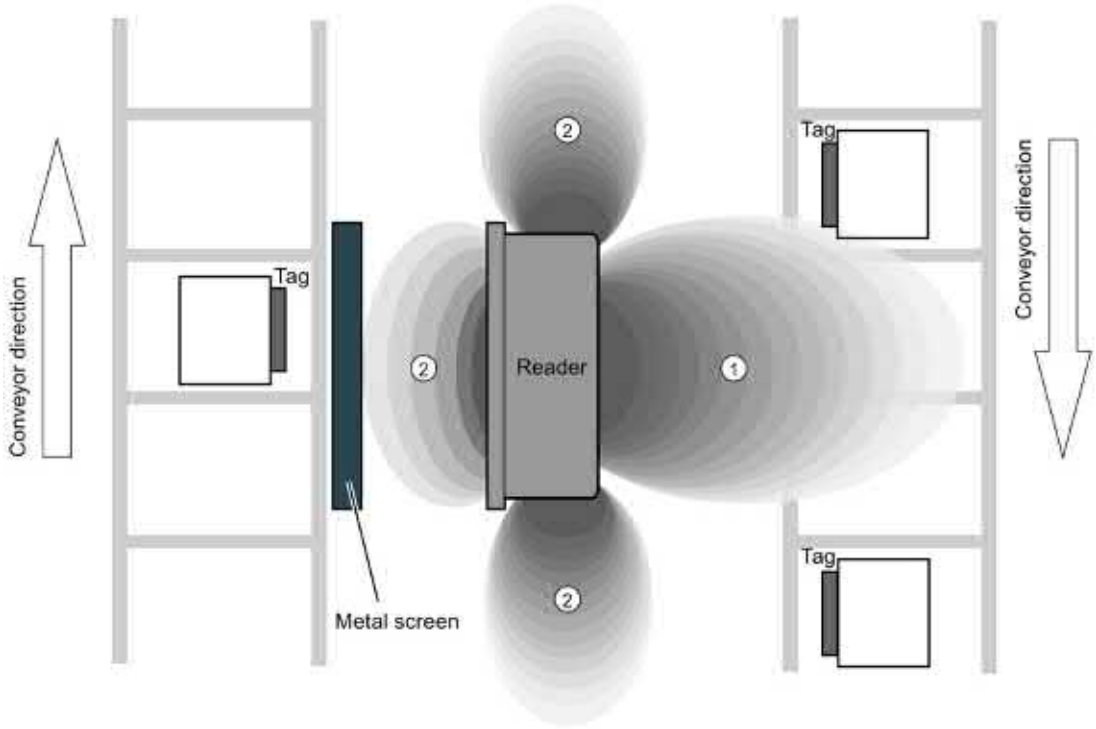

① Main field
② Secondary field

Figure 4-5 Secondary field with shielding

4.1.5 Permissible directions of motion of the transponder

Detection area and direction of motion of the transponder

The transponder and reader have no polarization axis, i.e. the transponder can come in from any direction, assume any position as parallel as possible to the reader, and cross the transmission window. The figure below shows the active area for various directions of transponder motion:

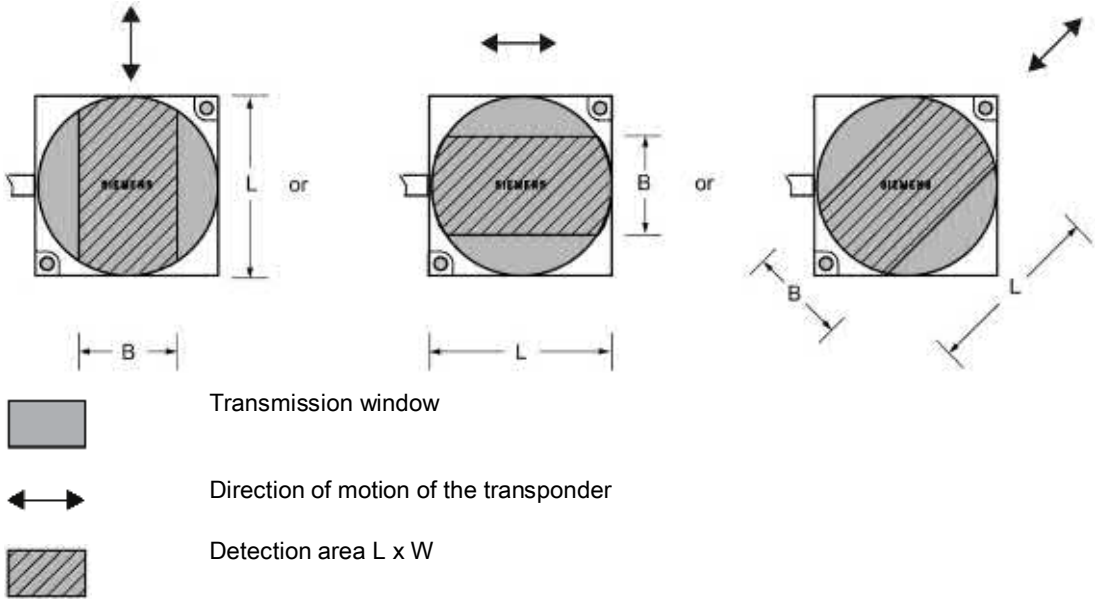

Figure 4-6 Detection areas of the reader for different directions of transponder motion

4.1.6 Operation in static and dynamic mode

Operation in static mode

If working in static mode, the transponder can be operated up to the limit distance (S_g). The transponder must then be positioned exactly over the reader:

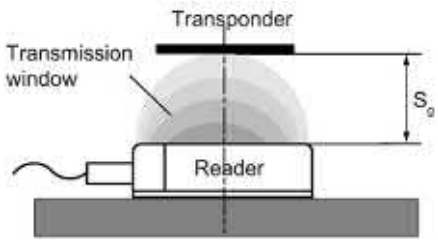

Figure 4-7 Operation in static mode

Note

Note that in a metallic environment the values for the limit distance are reduced.

Operation in dynamic mode

When working in dynamic mode, the transponder moves past the reader. The transponder can be used as soon as the intersection (SP) of the transponder enters the circle of the transmission window. In dynamic mode, the operating distance (S_a) is of primary importance. [Operating distances, see section Field data of transponders and readers (Page 38)]

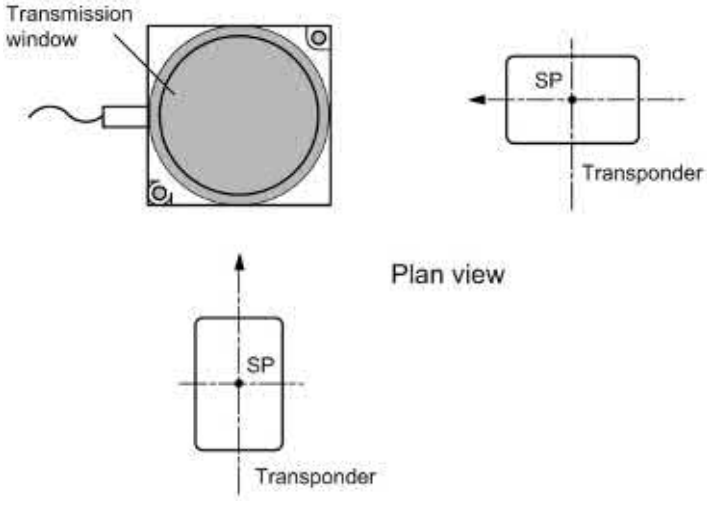

Figure 4-8 Operation in dynamic mode

4.1.7 Dwell time of the transponder

The dwell time is the time in which the transponder remains within the transmission window of the reader. The reader can exchange data with the transponder during this time.

The dwell time is calculated as follows:

$$t_V = (L * 0{,}8\ [m]) : V_{Tag}\ [m/s]$$

t_V: Dwell time of the transponder

L: Length of the transmission window

v_{Tag}: Speed of the transponder (tag) in dynamic mode

0.8: Constant factor used to compensate for temperature influence and production tolerances

The dwell time can be of any duration in static mode. The dwell time must be sufficiently long to allow communication with the transponder.

The dwell time is defined by the system environment in dynamic mode. The volume of data to be transferred must be matched to the dwell time or vice versa. As a general rule:

$$t_V \geq t_K$$

t_V: Dwell time of the data memory in the field of the reader

t_K: Communication time between transponder and communication module

4.1.8 Communication between communication module, reader and transponder

Aids for calculating the data transmission times

User-friendly calculation tools are available for the communications modules ASM 456, RF160C, RF170C and RF180C to calculate data transfer times. The calculation tools can be found on the DVD "Ident Systems Software & Documentation", article number 6GT2080-2AA20.

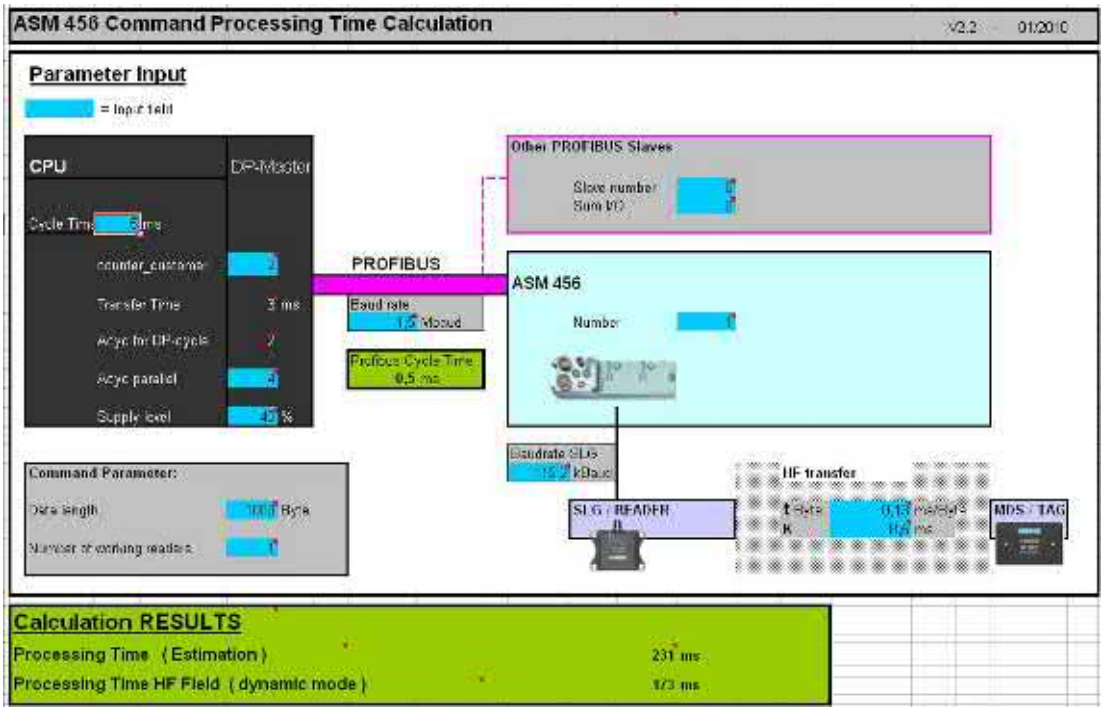

Figure 4-9 User interface of the calculation tool for command processing time

Aids for calculating the field data

The free "TIA Selection Tool" configurator also supports you during field data collection. Using this tool, among other things, you can calculate the operating distance (S_a), limit distance (S_g) and transmission window (L).

4.2 Field data of transponders and readers

The following tables show the field data for all SIMATIC RF200 components of transponders and readers. This makes the correct selection of a transponder and reader particularly easy.

All technical data listed is typical data and is applicable for an ambient room temperature of between 0 °C and +50 °C, a supply voltage of between 22 V and 27 V DC as well as an environment free of metal. **Tolerances of ±20 % are permitted due to production or temperature conditions.**

If the entire voltage range at the reader of 20 VDC to 30 VDC and/or the entire temperature range of transponders and readers is used, the field data is subject to further tolerances.

Note

Transmission gaps

If the minimum operating distance (S_a) is not observed, a transmission gap can occur in the center of the field. Communication with the transponder is not possible in the transmission gap.

Note

Possible reader-transponder combinations

The tables of the following section show the possible reader-transponder combinations.

4.2.1 Field data

The limit distances (S_g) and operating distances (S_a) along with the length of the transmission window for each reader-transponder combination are listed in the tables below.

Table 4- 1 SIMATIC RF210R field data

	Length of the transmission window (L_d)	Operating distance (S_a)	Limit distance (S_g)
MDS D124	25	1 ... 18	20
MDS D127 [1)]	3	0 ... 2	2
MDS D160	20	1 ... 10	12
MDS D324	20	1 ... 8	9
MDS D421	5	0 ... 3	4
MDS D422	8	1 ... 9	10
MDS D423	20	2 ... 10	12
MDS D424	24	1 ... 16	18
MDS D425	12	1 ... 6	7
MDS D428	20	1 ... 10	11
MDS D460	8	1 … 8	9
MDS D521	5	0 ... 3	4
MDS D522	8	1 ... 8	9
MDS D522 Special variants	8	1 ... 8	9
MDS D524	20	1 ... 15	17
MDS D525	12	1 ... 6	7
MDS D528	15	1 ... 10	11
MDS D560	8	1 ... 8	9

[1)] The transponder is only suitable for static mode.

All dimensions in mm.

Table 4- 2 SIMATIC RF220R field data

	Length of the transmission window (L_d)	Operating distance (S_a)	Limit distance (S_g)
MDS D124	35	1 ... 28	31
MDS D126	45	2 ... 30	35
MDS D160	20	1 ... 20	22
MDS D324	30	2 ... 21	25
MDS D422	18	1 ... 12	14
MDS D423	30	2 ...24	28
MDS D424	30	2 ... 25	29
MDS D425	20	1 ... 11	13
MDS D426	40	2 ... 25	30
MDS D428	25	1 ... 18	21
MDS D460	25	1 ... 18	20
MDS D522	15	1 ... 10	12
MDS D522 Special variants	15	1 ... 10	12
MDS D524	25	2 ... 22	25
MDS D525	20	1 ... 11	13
MDS D526	30	2 ... 25	30
MDS D528	20	1 ... 15	20
MDS D560	25	1 ... 18	21

All dimensions in mm.

Table 4- 3 SIMATIC RF240R field data

	Length of the transmission window (L)	Operating distance (S_a)	Limit distance (S_g)
MDS D100	100	2 ... 84	95
MDS D124	65	2 ... 53	60
MDS D126	80	2 ... 57	65
MDS D160	50	1 ... 33	37
MDS D165	105	2 ... 80	94
MDS D200	90	2 ... 69	78
MDS D261	70	2 ... 60	70
MDS D324	55	1 ... 36	40
MDS D400	95	2 ... 80	90
MDS D422	25	1 ... 12	15
MDS D423	45	2 ... 35	40
MDS D424	75	1 ... 47	53
MDS D425	30	1 ... 15	17
MDS D426	65	2 ... 45	55
MDS D428	50	1 ... 30	34
MDS D460	50	1 ... 30	34
MDS D522	20	1 ... 10	12
MDS D522 Special variants	20	1 ... 10	12
MDS D524	60	1 ... 45	55
MDS D525	30	1 ... 15	17
MDS D526	60	2 ... 45	55
MDS D528	40	1 ... 30	35
MDS D560	50	1 ... 30	34

All dimensions in mm.

Table 4- 4 Field data SIMATIC RF250R, with ANT 1

	Length of the transmission window (L_d)	Operating distance (S_a)	Limit distance (S_g)
MDS D100	80	5 ... 95	115
MDS D124	55	2 ... 60	75
MDS D126	150	2 ... 80	95
MDS D139	75	5 ... 90	105
MDS D160	50	2 ... 35	45
MDS D165	140	5 ... 95	110
MDS D200	130	5 ... 90	100
MDS D261	100	2 ... 90	110
MDS D324	50	5 ... 60	70
MDS D339	110	2 ... 85	100
MDS D400	140	10 ... 95	110
MDS D423	50	2 ... 35	45
MDS D424	50	2 ... 70	80
MDS D425	40	2 ... 25	30
MDS D426	110	2 ... 80	95
MDS D428	40	2 ... 40	50
MDS D460	50	2 ... 30	40
MDS D524	50	2 ... 65	80
MDS D525	40	2 ... 25	30
MDS D526	110	2 ... 80	95
MDS D528	40	2 ... 40	45
MDS D560	50	2 ... 35	45

All dimensions in mm.

Table 4- 5 Field data SIMATIC RF250R, with ANT 3

	Length of the transmission window (L_d)	Operating distance (S_a)	Limit distance (S_g)
MDS D124	40	1 ... 32	40
MDS D126	65	0 ... 47	60
MDS D160	24	1 ... 23	30
MDS D324	32	1 ... 22	35
MDS D422	20	0 ... 12	15
MDS D423	35	0 ... 24	30
MDS D424	40	0 ... 34	48
MDS D425	22	1 ... 12	20
MDS D426	65	0 ... 44	58
MDS D428	20	1 ... 20	32
MDS D460	24	1 ... 21	27
MDS D522	20	1 ... 12	15
MDS D522 Special variants	20	1 ... 12	15
MDS D524	40	1 ... 35	40
MDS D525	22	1 ... 12	20
MDS D526	45	2 ... 35	45
MDS D528	20	1 ... 20	25
MDS D560	24	0 ... 21	27

All dimensions in mm.

Table 4- 6 Field data SIMATIC RF250R, with ANT 3S

	Length of the transmission window (L_d)	Operating distance (S_a)	Limit distance (S_g)
MDS D117	2	0 ... 2	3
MDS D127	3	0 ... 2	3
MDS D421	3	0 ... 3	4
MDS D521	3	0 ... 3	4

All dimensions in mm.

Table 4- 7 Field data SIMATIC RF250R, with ANT 8

	Length of the transmission window (L_d)	Operating distance (S_a)	Limit distance (S_g)
MDS D117	2	0 ... 2	3
MDS D127	3	0 ... 3	4
MDS D421	3	0 ... 3	4
MDS D521	3	0 ... 3	4

All dimensions in mm.

Table 4- 8 Field data SIMATIC RF250R, with ANT 12

	Length of the transmission window (L_d)	Operating distance (S_a)	Limit distance (S_g)
MDS D117	3	0 ... 3	4
MDS D127	4	0 ... 4	5
MDS D160	18	0 ... 12	17
MDS D421	10	0 ... 2	3
MDS D422	22	0 ... 7	10
MDS D425	12	0 ... 8	10
MDS D428	18	1 ... 8	12
MDS D460	16	1 ... 10	14
MDS D521	10	0 ... 3	4
MDS D522	10	1 ... 7	9
MDS D522 Special variants	10	1 ... 7	9
MDS D525	12	1 ... 8	10
MDS D528	15	1 ... 8	12
MDS D560	16	1 ... 10	14

All dimensions in mm.

Table 4- 9 Field data SIMATIC RF250R, with ANT 12 (stainless steel variant)

	Length of the transmission window (L_d)	Operating distance (S_a)	Limit distance (S_g)
MDS D117	3	0 ... 2	3
MDS D127	4	0 ... 3	4
MDS D160	15	0 ... 11	13
MDS D421	9	0 ... 2	3
MDS D422	20	0 ... 5	6
MDS D425	10	1 ... 6	8
MDS D428	16	1 ... 10	12
MDS D460	14	1 ... 8	10
MDS D521	9	0 ... 2	3
MDS D522	9	1 ... 5	7
MDS D522 Special variant	9	1 ... 6	8
MDS D525	10	1 ... 8	10
MDS D528	14	1 ... 10	12
MDS D560	14	1 ... 11	14

All dimensions in mm.

Table 4- 10 Field data SIMATIC RF250R, with ANT 18

	Length of the transmission window (L_d)	Operating distance (S_a)	Limit distance (S_g)
MDS D124	26	0 ... 24	37
MDS D160	22	1 ... 18	26
MDS D324	30	1 ... 18	27
MDS D421	16	0 ... 3	5
MDS D422	24	1 ... 8	14
MDS D423	21	1 ... 15	18
MDS D424	26	1 ... 27	36
MDS D425	19	1 ... 11	16
MDS D428	19	1 ... 18	25
MDS D460	19	1 ... 17	21
MDS D521	6	0 ... 4	5
MDS D522	15	1 ... 10	12
MDS D522 Special variants	15	1 ... 10	12
MDS D524	30	1 ... 25	30
MDS D525	19	1 ... 11	16
MDS D528	20	1 ... 15	20
MDS D560	19	1 ... 17	21

All dimensions in mm.

Table 4- 11 Field data SIMATIC RF250R, with ANT 18 (stainless steel variant)

	Length of the transmission window (L_d)	Operating distance (S_a)	Limit distance (S_g)
MDS D124	22	1 ... 28	32
MDS D160	20	1 ... 17	20
MDS D324	28	1 ... 24	27
MDS D421	15	0 ... 3	5
MDS D422	22	0 ... 8	10
MDS D423	21	1 ... 22	25
MDS D424	25	1 ... 30	34
MDS D425	18	1 ... 13	15
MDS D428	18	1 ... 15	18
MDS D460	16	1 ... 15	18
MDS D521	5	0 ... 3	5
MDS D522	14	1 ... 10	12
MDS D522 Special variant	12	1 ... 7	9
MDS D524	30	1 ... 26	30
MDS D525	18	1 ... 13	16
MDS D528	18	1 ... 17	20
MDS D560	18	1 ... 17	21

All dimensions in mm.

Table 4- 12 Field data SIMATIC RF250R, with ANT 30

	Length of the transmission window (L_d)	Operating distance (S_a)	Limit distance (S_g)
MDS D124	40	1 ... 35	48
MDS D126	45	0 ... 47	60
MDS D160	25	1 ... 23	30
MDS D324	35	1 ... 22	30
MDS D422	20	0 ... 12	15
MDS D423	35	0 ... 18	30
MDS D424	35	0 ... 34	48
MDS D425	20	1 ... 12	20
MDS D426	45	0 ... 44	58
MDS D428	20	1 ... 20	32
MDS D460	25	1 ... 21	27
MDS D522	18	1 ... 12	15
MDS D522 Special variants	18	1 ... 12	15
MDS D524	35	1 ... 35	40
MDS D526	45	2 ... 35	45
MDS D528	20	1 ... 20	25
MDS D560	25	1 ... 21	27

All dimensions in mm.

Table 4- 13 Field data SIMATIC RF250R, with ANT 30 (stainless steel variant)

	Length of the transmission window (L_d)	Operating distance (S_a)	Limit distance (S_g)
MDS D124	40	1 ... 34	38
MDS D126	45	0 ... 45	50
MDS D160	25	1 ... 22	25
MDS D324	35	1 ... 30	35
MDS D422	20	0 ... 12	15
MDS D423	35	1 ... 28	32
MDS D424	35	1 ... 40	45
MDS D425	20	1 ... 17	20
MDS D426	45	1 ... 40	48
MDS D428	20	1 ... 22	26
MDS D460	25	1 ... 24	27
MDS D522	18	1 ... 12	15
MDS D522 Special variant	18	1 ... 12	15
MDS D524	35	1 ... 35	42
MDS D526	45	2 ... 44	50
MDS D528	20	1 ... 22	25
MDS D560	25	1 ... 22	25

All dimensions in mm.

Table 4- 14 SIMATIC RF260R field data

	Length of the transmission window (L)	Operating distance (S_a)	Limit distance (S_g)
MDS D100	90	2 ... 110	130
MDS D124	60	2 ... 80	85
MDS D126	80	2 ... 75	100
MDS D139	90	2 ... 80	110
MDS D160	50	2 ... 40	45
MDS D165	120	2 ... 120	135
MDS D200	120	2 ... 100	120
MDS D261	80	2 ... 75	90
MDS D324	50	2 ... 60	70
MDS D339	110	5 ... 65	80
MDS D400	140	2 ... 110	140
MDS D423	50	2 ... 40	45
MDS D424	50	2 ... 60	70
MDS D426	75	2 ... 70	85
MDS D428	45	2 ... 40	45
MDS D460	45	2 ... 40	45
MDS D524	50	2 ... 60	70
MDS D526	80	2 ... 70	85
MDS D528	45	2 ... 35	40
MDS D560	45	2 ... 40	45

All dimensions in mm.

Table 4- 15 Field data SIMATIC RF280R

	Length of the transmission window (L)		Operating distance (S_a)	Limit distance (S_g)
	in the x direction (L_x)	in the y direction (L_y)		
MDS D100 [1]	140	100	10 ... 160	200
MDS D124	80	80	2 ... 110	130
MDS D126	180	140	2 ... 135	160
MDS D139	140	90	5 ... 150	190
MDS D160	80	40	2 ... 55	70
MDS D165 [1]	200	140	10 ... 160	190
MDS D200 [2]	200	160	20 ... 140	185
MDS D261 [3]	190	120	20 ... 110	150
MDS D324	100	60	2 ... 85	110
MDS D339	290	140	5 ... 150	170
MDS D400	240	120	10 ... 170	200
MDS D423	110	60	5 ... 60	70
MDS D424	100	70	2 ... 100	140
MDS D425	80	45	2 ... 30	40
MDS D426	220	160	2 ... 145	175
MDS D428	80	50	2 ... 60	88
MDS D460	80	70	2 ... 55	70
MDS D524	100	70	2 ... 110	130
MDS D525	80	45	2 ... 30	40
MDS D526	220	160	2 ... 135	165
MDS D528	80	50	2 ... 60	85
MDS D560	80	70	2 ... 55	70

All dimensions in mm.

[1] Be aware that the minimum distance must be increased 10 mm starting at 40 °C ambient temperature.

[2] Be aware that the minimum distance of the reader to the transponder must be increased approximately 6 mm every 5 °C starting at an ambient temperature of 25 °C and approximately 15 mm starting at an ambient temperature of 50 °C.

[3] Be aware that the minimum distance of the reader to the transponder must be increased approximately 3 mm every 5 °C starting at an ambient temperature of 25 °C and approximately 14 mm starting at an ambient temperature of 50 °C.

Table 4- 16 Field data SIMATIC RF285R, with ANT D1

	Length of the transmission window (L)	Operating distance (S_a)	Limit distance (S_g)
MDS D100	150	10 ... 150	200
MDS D124	60	0 ... 100	140
MDS D126	150	5 ... 110	150
MDS D139	110	5 ... 160	220
MDS D160	50	0 ... 65	90
MDS D165	150	10 ... 150	200
MDS D200	150	10 ... 130	180
MDS D261	120	5 ... 130	180
MDS D324	50	0 ... 90	130
MDS D339	110	5 ... 130	170
MDS D400	150	10 ... 130	180
MDS D423	50	10 ... 60	85
MDS D424	60	0 ... 90	130
MDS D426	110	5 ... 100	140
MDS D428	60	0 ... 55	80
MDS D460	50	0 ... 60	85
MDS D524	60	0 ... 90	130
MDS D526	110	5 ... 100	140
MDS D528	60	0 ... 55	80
MDS D560	50	0 ... 60	85

All dimensions in mm.

Table 4- 17 Field data SIMATIC RF285R, with ANT D5

	Length of the transmission window (L)	Operating distance (S_a)	Limit distance (S_g)
MDS D100	320	0 ... 350	450
MDS D124	300	0 ... 180	240
MDS D126	320	0 ... 300	380
MDS D139	320	0 ... 350	450
MDS D160	300	0 ... 110	140
MDS D165	320	0 ... 300	380
MDS D200	320	0 ... 350	450
MDS D261	320	0 ... 300	380
MDS D324	300	0 ... 150	200
MDS D339	320	0 ... 280	350
MDS D400	320	0 ... 320	420
MDS D424	300	0 ... 180	240
MDS D426	300	0 ... 250	320
MDS D460	300	0 ... 100	120
MDS D524	300	0 ... 180	240
MDS D526	320	0 ... 250	320
MDS D528	300	0 ... 110	140

All dimensions in mm.

Table 4- 18 Field data SIMATIC RF285R, with ANT D6

	Length of the transmission window (L)		Operating distance (S_a)	Limit distance (S_g)
	X direction	Y direction		
MDS D100	420	520	0 ... 450	550
MDS D124	400	500	0 ... 200	280
MDS D126	420	520	0 ... 350	450
MDS D139	420	520	0 ... 450	550
MDS D165	420	520	0 ... 350	450
MDS D200	420	520	0 ... 350	450
MDS D261	420	520	0 ... 300	400
MDS D324	400	500	0 ... 180	240
MDS D339	420	520	0 ... 350	450
MDS D400	420	520	0 ... 400	500
MDS D424	400	500	0 ... 200	280
MDS D426	420	520	0 ... 300	380
MDS D524	400	500	0 ... 200	250
MDS D526	420	520	0 ... 300	380

All dimensions in mm.

Table 4- 19 Field data SIMATIC RF290R, with ANT D1 (at 2 W)

	Length of the transmission window (L)	Operating distance (S_a)	Limit distance (S_g)
MDS D100	150	10 ... 180	250
MDS D124	60	0 ... 100	140
MDS D126	150	5 ... 110	150
MDS D139	110	5 ... 160	220
MDS D160	50	0 ... 65	90
MDS D165	150	10 ... 180	250
MDS D200	150	10 ... 170	240
MDS D261	120	5 ... 130	180
MDS D324	50	0 ... 90	130
MDS D339	110	5 ... 130	170
MDS D400	150	10 ... 170	240
MDS D423	50	10 ... 60	85
MDS D424	60	0 ... 90	130
MDS D426	110	5 ... 100	140
MDS D460	60	0 ... 60	85
MDS D524	60	0 ... 90	130
MDS D526	100	5 ... 100	140
MDS D528	60	0 ... 55	80
MDS D560	50	0 ... 60	85

All dimensions in mm.

Table 4- 20 Field data SIMATIC RF290R, with ANT D5 (at 4 W)

	Length of the transmission window (L)	Operating distance (S_a)	Limit distance (S_g)
MDS D100	320	0 ... 400	500
MDS D124	300	0 ... 200	280
MDS D126	320	0 ... 350	400
MDS D139	320	0 ... 400	500
MDS D160	300	0 ... 130	180
MDS D165	320	0 ... 350	450
MDS D200	320	0 ... 400	500
MDS D261	320	0 ... 300	400
MDS D324	300	0 ... 200	280
MDS D339	320	0 ... 300	380
MDS D400	320	0 ... 400	500
MDS D424	300	0 ... 200	280
MDS D426	320	0 ... 300	350
MDS D460	300	0 ... 120	160
MDS D524	300	0 ... 200	280
MDS D528	320	0 ... 300	350
MDS D560	300	0 ... 120	160

All dimensions in mm.

Table 4- 21 Field data SIMATIC RF290R, with ANT D6 (at 4 W)

	Length of the transmission window (L)		Operating distance (S_a)	Limit distance (S_g)
	X direction	Y direction		
MDS D100	520	420	0 ... 550	650
MDS D124	500	400	0 ... 220	300
MDS D126	520	420	0 ... 400	500
MDS D139	520	420	0 ... 500	600
MDS D165	520	420	0 ... 400	500
MDS D200	520	420	0 ... 500	600
MDS D261	520	420	0 ... 350	450
MDS D324	500	400	0 ... 200	280
MDS D339	520	420	0 ... 400	480
MDS D400	520	420	0 ... 500	650
MDS D424	500	400	0 ... 220	300
MDS D426	520	420	0 ... 350	400
MDS D524	500	400	0 ... 220	300
MDS D526	520	420	0 ... 350	400

All dimensions in mm.

Table 4- 22 Field data SIMATIC RF290R, with ANT D10 (at 4 W)

	Length of the transmission window (L)		Operating distance (S_a)	Limit distance (S_g)
	X direction	Y direction		
MDS D100	1050	350	0 ... 500	600
MDS D124	1000	300	0 ... 200	280
MDS D126	1050	350	0 ... 400	500
MDS D139	1050	350	0 ... 450	550
MDS D165	1050	350	0 ... 350	450
MDS D200	1050	350	0 ... 450	550
MDS D261	1050	350	0 ... 350	450
MDS D324	1000	300	0 ... 200	280
MDS D339	1050	350	0 ... 300	380
MDS D400	1050	350	0 ... 400	500
MDS D424	1000	300	0 ... 200	280
MDS D426	1050	350	0 ... 350	400
MDS D524	1000	300	0 ... 220	300
MDS D526	1050	350	0 ... 350	400

All dimensions in mm.

4.2.2 Minimum clearances

Minimum distance from transponder to transponder

The specified distances refer to a metal-free environment. For a metallic environment, the specified minimum distances must be multiplied by a factor of 1.5. The transponders designed specifically for installation in/on metal are an exception to this.

Table 4- 23 Minimum clearances for transponders - Part 1

	RF210R	RF220R	RF240R	RF260R	RF280R
MDS D100	--	--	--	≥ 240	≥ 420
MDS D117	--	--	--	--	--
MDS D124	≥ 25	≥ 40	≥ 90	≥ 180	≥ 360
MDS D126	--	≥ 50	≥ 100	≥ 180	≥ 400
MDS D127	≥ 15	--	--	--	--
MDS D139	--	--	--	≥ 200	≥ 450
MDS D160	≥ 20	≥ 25	≥ 70	≥ 150	≥ 300
MDS D165	--	--	--	≥ 240	≥ 500
MDS D200	--	--	--	≥ 240	≥ 500
MDS D261	--	--	--	≥ 200	≥ 400
MDS D324	≥ 25	≥ 40	≥ 90	≥ 180	≥ 360
MDS D339	--	--	--	≥ 200	≥ 450
MDS D400	--	--	--	≥ 240	≥ 500
MDS D421	≥ 10	--	--	--	--
MDS D422	≥ 15	≥ 20	≥ 50	--	--
MDS D423	--	--	≥ 80	≥ 160	≥ 250
MDS D424	≥ 25	≥ 40	≥ 90	≥ 180	≥ 360
MDS D425	≥ 20	≥ 25	≥ 75	--	≥ 250
MDS D426	--	≥ 50	≥ 90	≥ 180	≥ 400
MDS D428	≥ 25	≥ 25	≥ 75	≥ 150	≥ 300
MDS D460	≥ 20	≥ 25	≥ 70	≥ 150	≥ 300
MDS D521	≥ 10	--	--	--	--
MDS D522	≥ 15	≥ 20	≥ 50	--	--
MDS D522 Special variants	≥ 15	≥ 20	≥ 50	--	--
MDS D524	≥ 25	≥ 40	≥ 90	≥ 180	≥ 360
MDS D525	≥ 20	≥ 25	≥ 75	--	≥ 250
MDS D526	--	≥ 50	≥ 90	≥ 180	≥ 400
MDS D528	≥ 25	≥ 25	≥ 75	≥ 150	≥ 300
MDS D560	≥ 20	≥ 25	≥ 70	≥ 150	≥ 300

All values are in mm, relative to the operating distance (S_a) between reader and transponder, and between transponder edge and transponder edge

Table 4- 24 Minimum clearances for transponders - Part 2

	RF250R [1]				
	ANT 1	ANT 3 / ANT 30	ANT 3S / ANT 18	ANT 8	ANT 12
MDS D100	≥ 300	--	--	--	--
MDS D117	--	--	--	≥ 30	≥ 50
MDS D124	≥ 200	≥ 100	≥ 80	--	--
MDS D126	≥ 250	≥ 100	--	--	--
MDS D127	--	--	--	≥ 40	≥ 60
MDS D139	≥ 300	--	--	--	--
MDS D160	≥ 200	≥ 100	≥ 80	--	≥ 60
MDS D165	≥ 300	--	--	--	--
MDS D200	≥ 300	--	--	--	--
MDS D261	≥ 300	--	--	--	--
MDS D324	≥ 200	≥ 100	≥ 80	--	--
MDS D339	≥ 300	--	--	--	--
MDS D400	≥ 300	--	--	--	--
MDS D421	--	--	≥ 50	≥ 30	≥ 40
MDS D422	--	≥ 70	≥ 60	--	≥ 50
MDS D423	≥ 200	≥ 100	≥ 80	--	--
MDS D424	≥ 200	≥ 100	≥ 80	--	--
MDS D425	≥ 150	≥ 80	≥ 60	--	≥ 50
MDS D426	≥ 250	≥ 100	--	--	--
MDS D428	≥ 150	≥ 80	≥ 60	--	≥ 50
MDS D460	≥ 200	≥ 100	≥ 80	--	≥ 60
MDS D521	--	--	≥ 50	≥ 30	≥ 40
MDS D522	--	≥ 70	≥ 60	--	≥ 50
MDS D522 Special variant	--	≥ 70	≥ 60	--	≥ 50
MDS D524	≥ 200	≥ 100	≥ 80	--	--
MDS D525	≥ 150	≥ 80	≥ 60	--	≥ 50
MDS D526	≥ 250	≥ 100	--	--	--
MDS D528	≥ 150	≥ 80	≥ 60	--	≥ 50
MDS D560	≥ 200	≥ 100	≥ 80	--	≥ 60

[1] Depends on the connected antenna.

All values are in mm, relative to the operating distance (S_a) between reader and transponder, and between transponder edge and transponder edge

Table 4- 25 Minimum clearances for transponders - Part 3

	RF285R [1]			RF290R [2]			
	ANT D1	ANT D5	ANT D6	ANT D1	ANT D5	ANT D6	ANT D10
MDS D100	≥ 350	≥ 1000	≥ 1500	≥ 350	≥ 1000	≥ 1500	≥ 2000
MDS D117	--	--	--	--	--	--	--
MDS D124	≥ 250	≥ 800	≥ 1200	≥ 250	≥ 800	≥ 1200	≥ 1800
MDS D126	≥ 300	≥ 1000	≥ 1500	≥ 300	≥ 1000	≥ 1500	≥ 2000
MDS D127	--	--	--	--	--	--	--
MDS D139	≥ 350	≥ 1000	≥ 1500	≥ 350	≥ 1000	≥ 1500	≥ 2000
MDS D160	≥ 250	≥ 800	≥ 1200	≥ 250	≥ 800	≥ 1200	≥ 1800
MDS D165	≥ 350	≥ 1000	≥ 1500	≥ 350	≥ 1000	≥ 1500	≥ 2000
MDS D200	≥ 350	≥ 1000	≥ 1500	≥ 350	≥ 1000	≥ 1500	≥ 2000
MDS D261	≥ 350	≥ 1000	≥ 1500	≥ 350	≥ 1000	≥ 1500	≥ 2000
MDS D324	≥ 250	≥ 800	≥ 1200	≥ 250	≥ 800	≥ 1200	≥ 1800
MDS D339	≥ 350	≥ 1000	≥ 1500	≥ 350	≥ 1000	≥ 1500	≥ 2000
MDS D400	≥ 350	≥ 1000	≥ 1500	≥ 350	≥ 1000	≥ 1500	≥ 2000
MDS D421	--	--	--	--	--	--	--
MDS D422	--	--	--	--	--	--	--
MDS D423	≥ 250	--	--	≥ 250	--	--	--
MDS D424	≥ 250	≥ 800	≥ 1200	≥ 250	≥ 800	≥ 1200	≥ 1800
MDS D425	≥ 200	--	--	≥ 200	--	--	--
MDS D426	≥ 300	≥ 800	≥ 1200	≥ 300	≥ 800	≥ 1200	≥ 1800
MDS D428	≥ 200	--	--	≥ 200	--	--	--
MDS D460	≥ 250	≥ 800	--	≥ 250	≥ 800	--	--
MDS D521	--	--	--	--	--	--	--
MDS D522	--	--	--	--	--	--	--
MDS D522 Special variants	--	--	--	--	--	--	--
MDS D524	≥ 250	≥ 800	≥ 1200	≥ 250	≥ 800	≥ 1200	≥ 1800
MDS D525	≥ 200	--	--	≥ 200	--	--	--
MDS D526	≥ 300	≥ 800	≥ 1200	≥ 300	≥ 800	≥ 1200	≥ 1800
MDS D528	≥ 200	--	--	≥ 200	--	--	--
MDS D560	≥ 250	≥ 800	--	≥ 250	≥ 800	--	--

[1] Depends on the connected antenna.

[2] Depends on the connected antenna.

All values are in mm, relative to the operating distance (S_a) between reader and transponder, and between transponder edge and transponder edge

Minimum distance from reader to reader

The information below relates to the minimum clearances between devices mounted next to each other.

Table 4- 26 Minimum distances reader

RF210R to RF210R	RF220R to RF220R	RF240R to RF240R	RF260R to RF260R	RF280R to RF280R
≥ 60	≥ 100	with 2 readers: ≥ 120 with multiple readers: ≥ 200	with 2 readers: ≥ 150 with multiple readers: ≥ 250	with 2 readers: ≥ 400 with multiple readers: ≥ 500

All values are in mm

Table 4- 27 Minimum distances to readers or antennas

ANT x to ANT x with RF250R	ANT x to ANT x with RF285R	ANT Dx to ANT Dx with RF290R
Depending on the transponder used. You can find the values in the "Minimum clearances" sections of the ANT x.	ANT D1: ≥ 600	ANT D1 bei 2 Antennen: ≥ 600 [1)] ANT D1 bei mehreren Antennen: ≥ 600 [1)]
	ANT D5: ≥ 1500	ANT D5: ≥ 2000
	ANT D6: ≥ 1500	ANT D6: ≥ 2000
		ANT D10: ≥ 2000

All values are in mm

1) With a maximum transmit power of 2 W.

Note

Effect on inductive fields by not maintaining the minimum distances of the readers

If the values fall below those specified in the "minimum distance readers or antennas", there is a risk of the function being affected by inductive fields. In this case, the data transfer time would increase unpredictably or a command would be aborted with an error.

Keeping to the values specified in the "Minimum distance readers or antennas" table is therefore essential.

If the specified minimum distance cannot be complied with due to the physical configuration, the SET-ANT command can be used to activate and deactivate the HF field of the reader. The application software must be used to ensure that only one reader is active (antenna is switched on) at a time.

4.3 Installation guidelines

4.3.1 Overview

The transponder and reader complete with their antennas are inductive devices. Any type of metal in the vicinity of these devices affects their functionality. Some points need to be considered during planning and installation if the values described in the "Field data (Page 39)" section are to retain their validity:

- Minimum spacing between two readers or their antennas
- Minimum distance between two adjacent data memories
- Metal-free area for flush-mounting of readers or their antennas and transponders in metal
- Mounting of multiple readers or their antennas on metal frames or racks

The following sections describe the impact on the operation of the RFID system when mounted in the vicinity of metal.

4.3.2 Reduction of interference due to metal

Table 4- 28 Interference due to metal rack

Representation	Description
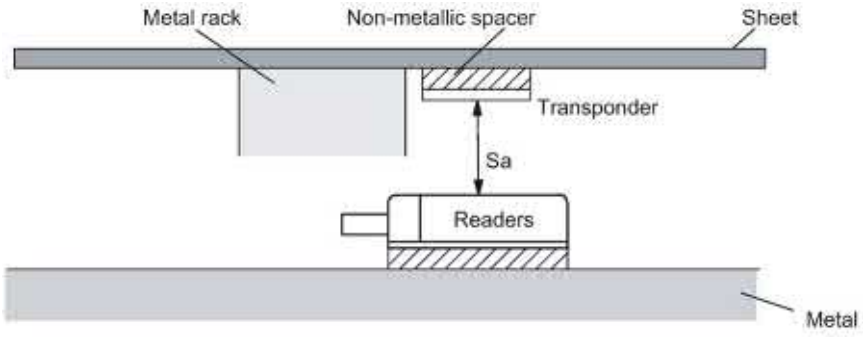	**Problem:** A metal rack is located above the transmission window of the reader. This affects the entire field. In particular, the transmission window between reader and transponder is reduced.
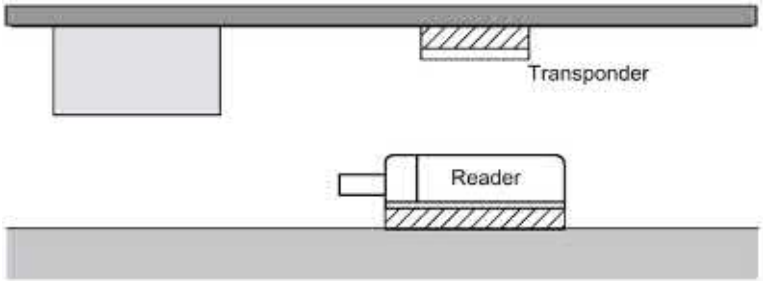	**Remedy:** The transmission window is no longer affected if the transponder is mounted differently.

Table 4- 29 Flush-mounting of transponders and readers

Representation	Description
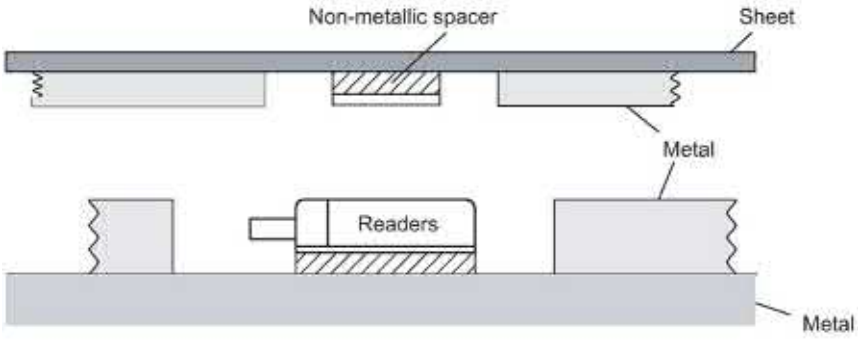	**Problem:** Flush-mounting of transponders and readers is possible in principle. However, the size of the transmission window is significantly reduced. The following measures can be used to counteract the reduction of the window:
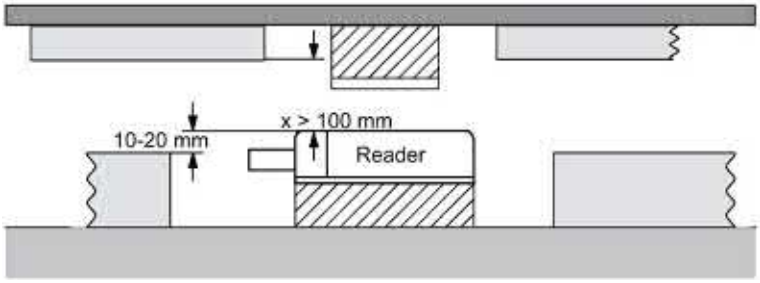	**Remedy:** Enlargement of the non-metallic spacer below the transponder and/or reader. The transponder and/or reader are 10 to 20 mm higher than the metal surround. (The value x ≥ 100 mm is valid, for example, for RF260R. It indicates that, for a distance x ≥ 100 mm, the reader can no longer be significantly affected by metal.)
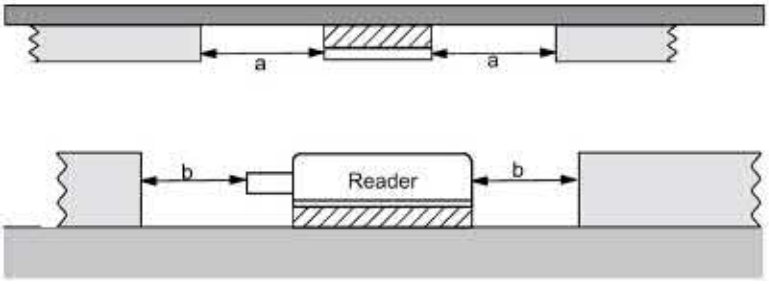	**Remedy:** Increase the distances a, b to metal. The following rule of thumb can be used: • Increase a, b by a factor of 2 to 3 over the values specified for metal-free areas • Increasing a, b has a greater effect for readers or transponders with a large limit distance than for readers or transponders with a small limit distance.

Mounting of several readers on metal frames or racks

Any reader mounted on metal couples part of the field to the metal frame. There is normally no interaction as long as the minimum distance D and metal-free areas a, b are maintained. However, interaction may take place if an iron frame is positioned unfavorably. Longer data transfer times or sporadic error messages at the communication module are the result.

Table 4- 30 Mounting of several readers on metal frames or racks

Representation	Description
	Problem: Interaction between readers
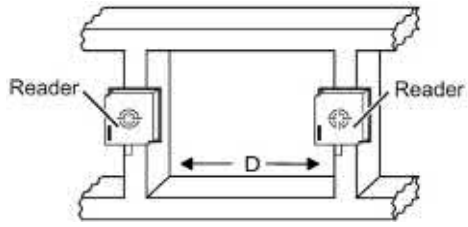	**Remedy:** Increase the distance D between the two readers.
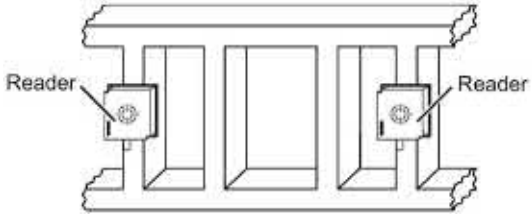	**Remedy:** Introduce one or more iron struts in order to short-circuit the stray fields.
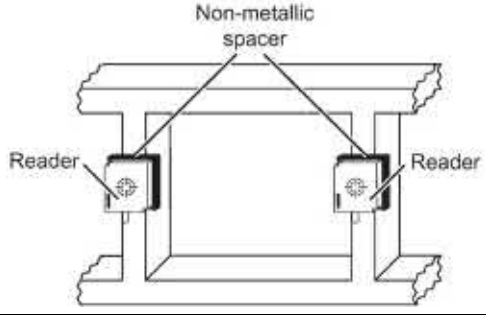	**Remedy:** Insert a non-metallic spacer of 20 to 40 millimeter thickness between the reader and the iron frame. This will significantly reduce the induction of stray fields on the rack:

4.3.3 Effects of metal on different transponders and readers

Mounting different transponders and readers on metal or flush-mounting

Certain conditions have to be observed when mounting the transponders and readers on metal or flush-mounting. For more information, please refer to the descriptions of the individual transponders and readers in the relevant section.

4.3.4 Impact of metal on the transmission window

In general, the following points should be considered when mounting RFID components:

- Direct mounting on metal is allowed only in the case of specially approved transponders.
- Flush-mounting of the components in metal reduces the field data; a test is recommended in critical applications.
- When working inside the transmission window, make sure that no metal rail (or similar part) intersects the transmission field.
  The metal rail would affect the field data.
- With readers with a large antenna surface, for reasons of communication reliability, when the transponders are flush-mounted in metal, a metal-free space around the transponders is recommended. This metal-free space should match the size of the antenna surface.
- The reduction of field data is also based on the minimum distance between the reader and transponder. The respective recommendations are listed in the following table.

The impact of metal on the field data (S_g, S_a, L) is shown in a table in this section. The values in the tables describe field data reduction and show the reduced range as a percentage. The range relates to use in a non-metallic environment. A value of 100% means no influence on the range.

Note

Possible reader-transponder combinations

The tables of the following section show the possible reader-transponder combinations.

4.3.4.1 RF210R

The RF210R can be flush-mounted in metal. Please allow for a possible reduction in the field data values. To avoid reduction in the case of d), the distance a should be ≥ 10 mm.

The following table shows the different installation example of the reader with and without a metallic environment:

Table 4- 31 Installation examples RF210R

Case	Diagram	Description
a)	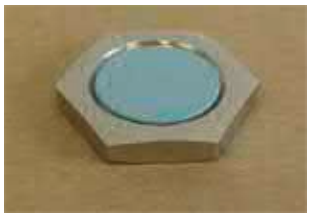	Reader metal-free
b)		Reader on metal, distance from metal ≥ 12 mm
c)	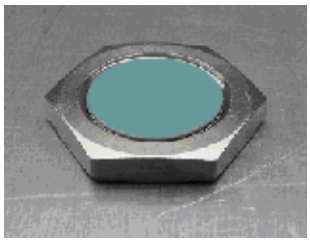	Reader in metal, flush against M18 nut
d)		Reader in metal, all around

Table 4- 32 Reduction of field data due to metal, range as %: Transponder and RF210R

Transponder		Reader without direct metal influence (Case a, b and d)	Reader flush-mounted in metal (Case c)
MDS D124 [1]	Metal-free	100	82
	On metal, distance 15 mm	90	90
	Flush-mounted in metal; distance all round 15 mm	85	80
MDS D127	Flush-mounted in metal; distance all round 0 mm	100	75
MDS D160 [1]	Metal-free	100	95
	On metal, distance 10 mm	100	95
MDS D324 [1]	Metal-free	100	90
	On metal, distance 15 mm	90	90
	Flush-mounted in metal; distance all round 25 mm	80	90
MDS D421	Metal-free	100	90
	Flush-mounted in metal; distance all round 0 mm	75	50
MDS D422	Metal-free	100	80
	Flush-mounted in metal; distance all round 0 mm	90	40
MDS D423	Metal-free	100	90
	On metal, distance 0 mm	110 [2]	100 [2]
	Flush-mounted in metal; distance all round 10 mm	95	85
MDS D424 [1]	Metal-free	100	60
	On metal, distance 15 mm	90	80
	Flush-mounted in metal; distance all round 25 mm	85	75
MDS D425	Metal-free	100	85
	On metal, distance 0 mm	100	85
MDS D428	Metal-free	100	90
	On metal, distance 0 mm	100	80
MDS D460 [1]	Metal-free	100	90
	On metal, distance 25 mm	100	90
MDS D521	Metal-free	100	90
	Flush-mounted in metal; distance all round 0 mm	75	50

Transponder		Reader without direct metal influence (Case a, b and d)	Reader flush-mounted in metal (Case c)
MDS D522	Metal-free	100	80
	Flush-mounted in metal; distance all round 0 mm	90	40
MDS D522 Special variants	Metal-free	100	80
	Flush-mounted in metal; distance all round 0 mm	90	40
MDS D524 [1]	Metal-free	100	60
	On metal, distance 15 mm	90	80
	Flush-mounted in metal; distance all round 25 mm	85	75
MDS D528	Metal-free	100	90
	On metal, distance 0 mm	100	80

[1] Mounting the transponder on or in metal is only possible with the appropriate spacer or if there is adequate clearance to the metal.

[2] Values of > 100 % related to non metal surroundings can occur if transponders were developed specifically for mounting in/on metallic surroundings.

4.3.4.2 RF220R

The RF220R can be flush-mounted in metal. Please allow for a possible reduction in the field data values. To avoid reduction in the case of d), the distance a should be ≥ 15 mm.

The following table shows the different installation example of the reader with and without a metallic environment:

Table 4- 33 Installation examples RF220R

Case	Diagram	Description
a)		Reader metal-free
b)		Reader on metal, distance from metal ≥ 12 mm
c)		Reader in metal, flush against M30 nut
d)		Reader in metal, all round

Table 4- 34 Reduction of field data due to metal, range as %: Transponder and RF220R

Transponder		Reader without direct metal influence (Case a, b and d)	Reader flush-mounted in metal (Case c)
MDS D124 [1]	Metal-free	100	94
	On metal, distance 15 mm	97	89
	Tag flush-mounted in metal; distance all round 15 mm	86	83
MDS D126 [1]	Metal-free	100	75
	On metal, distance 25 mm	85	70
	Flush-mounted in metal; distance all round 50 mm	80	65
MDS D160 [1]	Metal-free	100	89
	On metal, distance 10 mm	100	89
MDS D324 [1]	Metal-free	100	90
	On metal, distance 15 mm	97	86
	Flush-mounted in metal; distance all round 25 mm	93	86
MDS D422	Metal-free	100	90
	Flush-mounted in metal; distance all round 0 mm	85	85
MDS D423	Metal-free	100	90
	On metal, distance 0 mm	125 [2]	115 [2]
	Flush-mounted in metal; distance all round 10 mm	80	75
MDS D424 [1]	Metal-free	100	93
	On metal, distance 15 mm	96	89
	Flush-mounted in metal; distance all round 25 mm	86	82
MDS D425	Metal-free	100	90
	Screwed onto metal	100	75
	Flush-mounted in metal; distance all round 25 mm	95	75
MDS D426 [1]	Metal-free	100	90
	On metal, distance 25 mm	90	75
	Flush-mounted in metal; distance all round 50 mm	80	70
MDS D428	Metal-free	100	94
	On metal, distance 0 mm	100	94
MDS D460 [1]	Metal-free	100	92
	On metal, distance 0 mm	100	92
MDS D522	Metal-free	100	90
	Flush-mounted in metal; distance all round 0 mm	85	85

Transponder		Reader without direct metal influence (Case a, b and d)	Reader flush-mounted in metal (Case c)
MDS D522 Special variants	Metal-free	100	90
	Flush-mounted in metal; distance all round 0 mm	85	85
MDS D524 [1]	Metal-free	100	93
	On metal, distance 0 mm	96	89
	Flush-mounted in metal; distance all round 0 mm	86	82
MDS D526 [1]	Metal-free	100	90
	On metal, distance 25 mm	90	75
	Flush-mounted in metal; distance all round 50 mm	80	70
MDS D528	Metal-free	100	94
	On metal, distance 0 mm	100	94

[1] Mounting the transponder on or in metal is only possible with the appropriate spacer or if there is adequate clearance to the metal.

[2] Values of > 100 % related to non metal surroundings can occur if transponders were developed specifically for mounting in/on metallic surroundings.

4.3.4.3 RF240R

The RF240R can be flush-mounted in metal. Please allow for a possible reduction in the field data values. To avoid reduction, the distance a should be ≥ 20 mm.

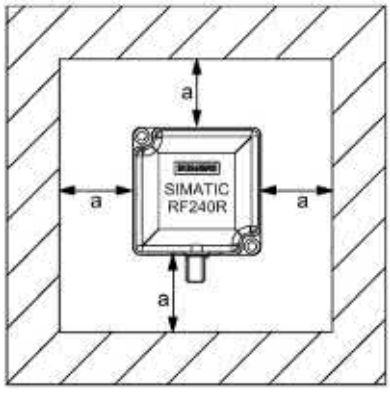

Figure 4-10 Metal-free space RF240R

Table 4- 35 Reduction of field data due to metal, range as %: Transponder and RF240R

Transponder		Reader without direct metal influence	Reader on metal (metal plate)	Reader flush-mounted in metal (all round 20 mm)
MDS D100 [1]	Without metal	100	95	80
	On metal, distance 20 mm	95	90	75
	Flush-mounted in metal; distance all round 20 mm	90	75	70
MDS D124 [1]	Without metal	100	85	75
	On metal, distance 15 mm	90	80	75
	Flush-mounted in metal; distance all round 25 mm	85	70	65
MDS D126 [1]	Without metal	100	80	70
	On metal, distance 25 mm	80	75	60
	Flush-mounted in metal; distance all round 50 mm	70	55	55
MDS D160 [1]	Without metal	100	90	80
	On metal, distance 10 mm	90	85	80
MDS D165	Without metal	100	95	75
	On metal, distance 25 mm	75	70	65
MDS D200 [1]	Without metal	100	95	85
	On metal, distance 20 mm	95	80	70
	Flush-mounted in metal, distance all round 20 mm	70	60	50
MDS D261	Without metal	100	90	90
	On metal, distance 25 mm	85	80	70
MDS D324 [1]	Without metal	100	90	80
	On metal, distance 15 mm	95	85	80
	Flush-mounted in metal; distance all round 25 mm	90	75	70
MDS D400 [1]	Without metal	100	90	80
	On metal, distance 20 mm	80	75	55
	Flush-mounted in metal, distance all round 20 mm	75	70	50
MDS D422	Without metal	100	90	85
	Flush-mounted in metal; distance all round 0 mm	90	60	40
MDS D423	Without metal	100	95	90
	On metal, distance 0 mm	150 [2]	140 [2]	140 [2]
	Flush-mounted in metal; distance all round 10 mm	70	60	60

Transponder		Reader without direct metal influence	Reader on metal (metal plate)	Reader flush-mounted in metal (all round 20 mm)
MDS D424 [1]	Without metal	100	85	80
	On metal, distance 15 mm	90	80	75
	Flush-mounted in metal; distance all round 25 mm	80	70	65
MDS D425	Without metal	100	90	85
	On metal, distance 0 mm	95	85	80
MDS D426 [1]	Without metal	100	80	70
	On metal, distance 25 mm	90	80	70
	Flush-mounted in metal; Distance all-round 50 mm	85	65	60
MDS D428	Without metal	100	90	85
	On metal, distance 0 mm	95	85	83
MDS D460 [1]	Without metal	100	90	80
	On metal, distance 0 mm	90	85	80
MDS D522	Metal-free	100	90	85
	Flush-mounted in metal; distance all round 0 mm	90	60	40
MDS D522 Special variant	Metal-free	100	90	85
	Flush-mounted in metal; distance all round 0 mm	90	60	40
MDS D524 [1]	Metal-free	100	85	80
	On metal, distance 0 mm	90	80	75
	Flush-mounted in metal; distance all round 0 mm	80	70	65
MDS D526 [1]	Metal-free	100	80	70
	On metal, distance 25 mm	90	80	70
	Flush-mounted in metal; distance all round 50 mm	85	65	60
MDS D528	Metal-free	100	90	85
	On metal, distance 0 mm	95	85	83
MDS D560 [1]	Without metal	100	90	80
	On metal, distance 0 mm	90	85	80

[1] Mounting the transponder on or in metal is only possible with the appropriate spacer or if there is adequate clearance to the metal.

[2] Values of > 100 % related to non metal surroundings can occur if transponders were developed specifically for mounting in/on metallic surroundings.

4.3.4.4 RF250R

The RF250R reader is operated with the external antennas ANT 1, 3, 3S, 8, 12, 18 and 30. The antennas can be flush-mounted in metal. Please allow for a possible reduction in the field data values. To prevent a reduction, the clearances a (all around) and b should be observed.

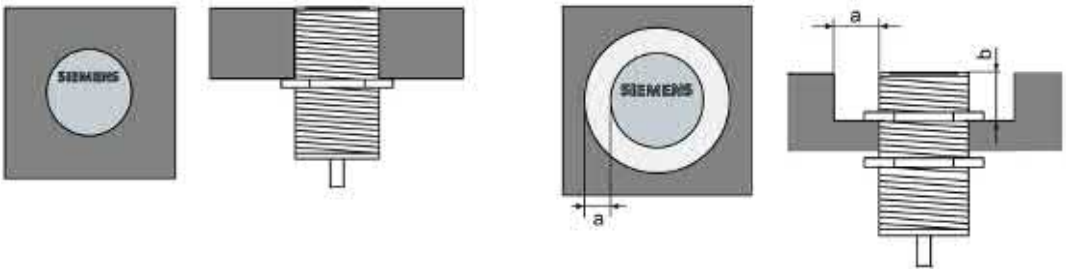

Figure 4-11 Metal-free space for ANT 8 / ANT 12 and ANT 18 / ANT 30

Table 4- 36 Reduction of field data due to metal, range as %: Transponder and RF250R with ANT 1

Transponder		ANT 1 without metal	ANT 1 on metal	ANT 1 mounted in metal (all round 40 mm)
MDS D100[1)]	Without metal	100	85	80
	On metal; distance 20 mm	70	60	65
	Flush-mounted in metal; distance all round 20 mm	60	45	45
MDS D124[1)]	Without metal	100	95	85
	On metal; distance 15 mm	85	85	80
	Flush-mounted in metal; distance all round 20 mm	85	80	50
MDS D126[1)]	Without metal	100	85	85
	On metal; distance 25 mm	85	75	75
	Flush-mounted in metal; distance all round 50 mm	80	70	70
MDS D139[1)]	Without metal	100	90	85
	On metal; distance 30 mm	95	85	85
	Flush-mounted in metal; distance all round 100 mm	95	85	85
MDS D160[1)]	Without metal	100	95	90
	On metal; distance 10 mm	85	85	80
MDS D165	Without metal	100	85	85
	On metal; distance 25 mm	90	80	75
MDS D200[1)]	Without metal	100	85	80
	On metal; distance 20 mm	85	75	75
	Flush-mounted in metal; distance all round 20 mm	75	65	65

Transponder		ANT 1 without metal	ANT 1 on metal	ANT 1 mounted in metal (all round 40 mm)
MDS D261	Without metal	100	90	85
	On metal; distance 25 mm	85	80	80
MDS D324[1)]	Without metal	100	85	85
	On metal; distance 15 mm	90	80	80
	Flush-mounted in metal; distance all round 25 mm	80	75	65
MDS D339[1)]	Without metal	100	90	85
	On metal; distance 30 mm	95	85	85
	Flush-mounted in metal; distance all round 100 mm	95	85	85
MDS D400[1)]	Without metal	100	90	85
	On metal; distance 20 mm	80	70	65
	Flush-mounted in metal; distance all round 20 mm	65	60	60
MDS D423	Without metal	100	90	90
	On metal; distance 0 mm	115[2)]	115[2)]	115[2)]
	Flush-mounted in metal; distance all round 0 mm	80	65	65
MDS D424[1)]	Without metal	100	90	75
	On metal; distance 15 mm	85	80	75
	Flush-mounted in metal; distance all round 25 mm	75	70	70
MDS D425	Without metal	100	95	95
	On metal; distance 0 mm	90	85	85
MDS D426[1)]	Without metal	100	90	85
	On metal; distance 25 mm	85	80	75
	Flush-mounted in metal; distance all round 50 mm	80	75	70
MDS D428	Without metal	100	90	85
	On metal; distance 0 mm	85	80	80
MDS D460[1)]	Without metal	100	90	80
	On metal; distance 10 mm	85	80	75
MDS D524[1)]	Without metal	100	90	75
	On metal; distance 15 mm	85	80	75
	Flush-mounted in metal; distance all round 25 mm	75	70	70

Transponder		ANT 1 without metal	ANT 1 on metal	ANT 1 mounted in metal (all round 40 mm)
MDS D525	Without metal	100	95	95
	On metal; distance 0 mm	90	85	85
MDS D526 [1]	Without metal	100	90	85
	On metal; distance 25 mm	85	80	75
	Flush-mounted in metal; distance all round 50 mm	80	75	70
MDS D528	Without metal	100	90	85
	On metal; distance 0 mm	85	80	80
MDS D560 [1]	Without metal	100	90	80
	On metal; distance 10 mm	85	80	75

[1] Mounting the transponder on or in metal is only possible with the appropriate spacer or if there is adequate clearance to the metal.

[2] Values of > 100 % can occur if transponders were developed specifically for mounting in/on metallic surroundings.

Table 4- 37 Reduction of field data due to metal, range as %: Transponder and RF250R with ANT 3

Transponder		RF250R with ANT 3	
		Antenna without metal	Antenna flush-mounted in metal (all round 20 mm)
MDS D124 [1]	Without metal	100	80
	On metal, distance 15 mm	90	75
	Flush-mounted in metal; distance all round 25 mm	75	70
MDS D126 [1]	Without metal	100	80
	On metal, distance 25 mm	85	75
	Flush-mounted in metal; distance all round 50 mm	60	50
MDS D160 [1]	Without metal	100	85
	On metal, distance 10 mm	95	80
MDS D324 [1]	Without metal	100	80
	On metal, distance 15 mm	95	75
	Flush-mounted in metal; distance all round 25 mm	85	70
MDS D422	Without metal	100	95
	Flush-mounted in metal; distance all round 0 mm	95	80
MDS D423	Without metal	100	90
	On metal, distance 0 mm	130 [2]	110 [2]

Transponder		RF250R with ANT 3	
		Antenna without metal	Antenna flush-mounted in metal (all round 20 mm)
	Flush-mounted in metal; distance all round 10 mm	80	70
MDS D424 [1]	Without metal	100	85
	On metal, distance 15 mm	90	75
	Flush-mounted in metal; distance all round 25 mm	75	70
MDS D425	Without metal	100	90
	On metal, distance 0 mm	95	75
MDS D426 [1]	Without metal	100	70
	On metal, distance 25 mm	90	65
	Flush-mounted in metal; distance all round 25 mm	55	45
MDS D428	Without metal	100	90
	On metal, distance 0 mm	100	90
MDS D460 [1]	Without metal	100	85
	On metal, distance 10 mm	90	75
MDS D522	Without metal	100	95
	Flush-mounted in metal; distance all round 0 mm	95	80
MDS D522 Special variants	Without metal	100	95
	Flush-mounted in metal; distance all round 0 mm	95	80
MDS D524 [1]	Without metal	100	85
	On metal, distance 15 mm	90	75
	Flush-mounted in metal; distance all round 25 mm	75	70
MDS D526 [1]	Without metal	100	70
	On metal, distance 25 mm	90	65
	Flush-mounted in metal; distance all round 25 mm	55	45
MDS D528	Without metal	100	90
	On metal, distance 0 mm	100	90
MDS D560 [1]	Without metal	100	85
	On metal, distance 10 mm	90	75

[1] Mounting the transponder on or in metal is only possible with the appropriate spacer or if there is adequate clearance to the metal.

[2] Values of > 100 % related to non metal surroundings can occur if transponders were developed specifically for mounting in/on metallic surroundings.

Table 4- 38 Reduction of field data due to metal, range as %: Transponder and RF250R with ANT 3S

Transponder		RF250R with ANT 3S	
		Antenna without metal	Antenna flush-mounted in metal
MDS D117	Flush-mounted in metal; distance all round 20 mm	100	90
MDS D127	Flush-mounted in metal; distance all round 20 mm	100	90
MDS D421	Flush-mounted in metal; distance all round 20 mm	100	90
MDS D521	Flush-mounted in metal; distance all round 20 mm	100	90

Table 4- 39 Reduction of field data due to metal, range as %: Transponder and RF250R with ANT 8

Transponder		RF250R with ANT 8	
		Antenna without metal	Antenna flush-mounted in metal
MDS D117	Without metal	100	85
	Flush-mounted in metal; distance all round 0 mm	65	55
MDS D127	Without metal	100	85
	Flush-mounted in metal; distance all round 0 mm	70	60
MDS D421	Without metal	100	85
	Flush-mounted in metal; distance all round 0 mm	75	70
MDS D521	Without metal	100	85
	Flush-mounted in metal; distance all round 0 mm	75	70

Table 4- 40 Reduction of field data due to metal, range as %: Transponder and RF250R with ANT 12

Transponder		RF250R with ANT 12	
		Antenna without metal	Antenna flush-mounted in metal (all round 7 mm)
MDS D117	Without metal	100	85
	Flush-mounted in metal; distance all round 0 mm	50	40
MDS D127	Without metal	100	85
	Flush-mounted in metal; distance all round 0 mm	65	50
MDS D160 [1]	Without metal	100	90
	On metal, distance 10 mm	90	85
MDS D421	Without metal	100	90
	Flush-mounted in metal; distance all round 0 mm	65	45
MDS D422	Without metal	100	90
	Flush-mounted in metal; distance all round 0 mm	90	75
MDS D425	Without metal	100	90
	On metal, distance 0 mm	115 [2]	100
MDS D428	Without metal	100	85
	On metal, distance 0 mm	110 [2]	95
MDS D460 [1]	Without metal	100	95
	On metal, distance 10 mm	90	80
	Flush-mounted in metal; distance all round 0 mm	85	75
MDS D521	Without metal	100	90
	Flush-mounted in metal; distance all round 0 mm	65	45
MDS D522	Without metal	100	90
	Flush-mounted in metal; distance all round 0 mm	90	75
MDS D528	Without metal	100	85
	On metal, distance 0 mm	110 [2]	95
MDS D560 [1]	Without metal	100	90
	On metal, distance 10 mm	90	85

[1] Mounting the transponder on or in metal is only possible with the appropriate spacer or if there is adequate clearance to the metal.

[2] Values of > 100 % related to non metal surroundings can occur if transponders were developed specifically for mounting in/on metallic surroundings.

Table 4- 41 Reduction of field data due to metal, range as %: Transponder and RF250R with ANT 18

Transponder		RF250R with ANT 18	
		Antenna without metal	Antenna flush-mounted in metal (all round 10 mm)
MDS D124 [1]	Without metal	100	80
	On metal, distance 15 mm	100	80
	Flush-mounted in metal; distance all round 25 mm	95	70
MDS D160 [1]	Without metal	100	90
	On metal, distance 10 mm	100	90
MDS D324 [1]	Without metal	100	80
	On metal, distance 15 mm	100	80
	Flush-mounted in metal; distance all round 25 mm	95	75
MDS D421	Without metal	100	85
	Flush-mounted in metal; distance all round 0 mm	65	50
MDS D422	Without metal	100	100
	Flush-mounted in metal; distance all round 0 mm	90	90
MDS D423	Without metal	100	85
	On metal, distance 0 mm	120 [2]	110 [2]
	Flush-mounted in metal; distance all round 10 mm	90	75
MDS D424 [1]	Without metal	100	75
	On metal, distance 15 mm	95	75
	Flush-mounted in metal; distance all round 25 mm	95	75
MDS D425	Without metal	100	90
	On metal, distance 0 mm	100	90
MDS D428	Without metal	100	85
	On metal, distance 0 mm	100	85
MDS D460 [1]	Without metal	100	85
	On metal, distance 10 mm	100	85
MDS D521	Without metal	100	85
	Flush-mounted in metal; distance all round 0 mm	65	50
MDS D522	Without metal	100	100
	Flush-mounted in metal; distance all round 0 mm	90	90

Transponder		RF250R with ANT 18	
		Antenna without metal	Antenna flush-mounted in metal (all round 10 mm)
MDS D522 Special variants	Without metal	100	100
	Flush-mounted in metal; distance all round 0 mm	90	90
MDS D524 [1]	Without metal	100	75
	On metal, distance 15 mm	95	75
	Flush-mounted in metal; distance all round 25 mm	95	75
MDS D528	Without metal	100	85
	On metal, distance 0 mm	100	85
MDS D560 [1]	Without metal	100	85
	On metal, distance 10 mm	100	85

[1] Mounting the transponder on or in metal is only possible with the appropriate spacer or if there is adequate clearance to the metal.

[2] Values of > 100 % related to non metal surroundings can occur if transponders were developed specifically for mounting in/on metallic surroundings.

Table 4- 42 Reduction of field data due to metal, range as %: Transponder and RF250R with ANT 30

Transponder		RF250R with ANT 30	
		Antenna without metal	Antenna flush-mounted in metal (all round 20 mm)
MDS D124 [1]	Without metal	100	80
	On metal, distance 15 mm	90	75
	Flush-mounted in metal; distance all round 25 mm	75	70
MDS D126 [1]	Without metal	100	80
	On metal, distance 25 mm	85	75
	Flush-mounted in metal; distance all round 50 mm	60	50
MDS D160 [1]	Without metal	100	85
	On metal, distance 10 mm	95	80
MDS D324 [1]	Without metal	100	80
	On metal, distance 15 mm	95	75
	Flush-mounted in metal; distance all round 25 mm	85	70
MDS D422	Without metal	100	95
	Flush-mounted in metal; distance all round 0 mm	95	80

Transponder		RF250R with ANT 30	
		Antenna without metal	Antenna flush-mounted in metal (all round 20 mm)
MDS D423	Without metal	100	90
	On metal, distance 0 mm	130 [2]	110 [2]
	Flush-mounted in metal; distance all round 10 mm	80	70
MDS D424 [1]	Without metal	100	85
	On metal, distance 15 mm	90	75
	Flush-mounted in metal; distance all round 25 mm	75	70
MDS D425	Without metal	100	90
	On metal, distance 0 mm	95	75
MDS D426 [1]	Without metal	100	70
	On metal, distance 25 mm	90	65
	Flush-mounted in metal; distance all round 25 mm	55	45
MDS D428	Without metal	100	90
	On metal, distance 0 mm	100	90
MDS D460 [1]	Without metal	100	85
	On metal, distance 10 mm	90	75
MDS D522	Without metal	100	95
	Flush-mounted in metal; distance all round 0 mm	95	80
MDS D522 Special variants	Without metal	100	95
	Flush-mounted in metal; distance all round 0 mm	95	80
MDS D524 [1]	Without metal	100	85
	On metal, distance 15 mm	90	75
	Flush-mounted in metal; distance all round 25 mm	75	70
MDS D526 [1]	Without metal	100	70
	On metal, distance 25 mm	90	65
	Flush-mounted in metal; distance all round 25 mm	55	45
MDS D528	Without metal	100	90
	On metal, distance 0 mm	100	90
MDS D560 [1]	Without metal	100	85
	On metal, distance 10 mm	90	75

[1] Mounting the transponder on or in metal is only possible with the appropriate spacer or if there is adequate clearance to the metal.

[2] Values of > 100 % related to non metal surroundings can occur if transponders were developed specifically for mounting in/on metallic surroundings.

4.3.4.5 RF260R

The RF260R can be flush-mounted in metal. Please allow for a possible reduction in the field data values. To avoid reduction, the distance a should be ≥ 20 mm.

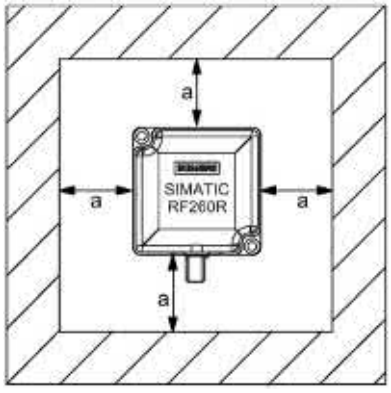

Figure 4-12 Metal-free space for RF260R

Table 4- 43 Reduction of field data due to metal, range as %: Transponder and RF260R

Transponder		Reader without metal direct metal influence	Reader on metal (metal plate)	Reader flush-mounted in metal (all round 20 mm)
MDS D100 [1]	Without metal	100	85	65
	On metal, distance 20 mm	70	65	50
	Flush-mounted in metal; distance all round 20 mm [4]	65	50	40
MDS D124 [1]	Without metal	100	93	75
	On metal, distance 15 mm	95	85	70
	Flush-mounted in metal; distance all round 25 mm [2]	78	75	65
MDS D126 [1]	Without metal	100	85	73
	On metal, distance 25 mm	75	68	60
	Flush-mounted in metal; distance all round 50 mm [3]	55	53	40
MDS D139 [1]	Without metal	100	90	75
	On metal; distance 30 mm [4]	95	90	75
MDS D160 [1]	Without metal	100	90	75
	On metal, distance 10 mm	90	80	80
MDS D165	Without metal	100	85	65
	On metal; distance 25 mm [4]	65	60	45

Transponder		Reader without metal direct metal influence	Reader on metal (metal plate)	Reader flush-mounted in metal (all round 20 mm)
MDS D200 [1]	Without metal	100	85	70
	On metal, distance 20 mm	70	65	50
	Flush-mounted in metal, distance all round 20 mm [3]	55	50	45
MDS D261	Without metal	100	85	70
	On metal; distance 25 mm [3]	80	70	60
MDS D324 [1]	Without metal	100	90	75
	On metal, distance 15 mm	90	80	70
	Flush-mounted in metal; distance all round 25 mm [2]	70	65	55
MDS D339 [1]	Without metal	100	90	75
	On metal; distance 30 mm [4]	95	90	75
MDS D400 [1]	Without metal	100	85	70
	On metal, distance 20 mm	70	65	50
	Flush-mounted in metal; distance all round 20 mm [4]	55	50	45
MDS D423	Without metal	100	95	85
	On metal, distance 0 mm	120 [5]	115 [5]	110 [5]
	Flush-mounted in metal; distance all round 10 mm [2]	75	65	60
MDS D424 [1]	Without metal	100	90	80
	On metal, distance 15 mm	90	80	70
	Flush-mounted in metal; distance all round 25 mm [2]	60	60	50
MDS D426 [1]	Without metal	100	100	73
	On metal, distance 25 mm	88	85	68
	Flush-mounted in metal; distance all round 50 mm [3]	65	55	55
MDS D428	Without metal	100	90	90
	On metal, distance 0 mm	90	90	85
MDS D460 [1]	Without metal	100	95	90
	On metal, distance 10 mm	90	85	80
MDS D524 [1]	Without metal	100	90	80
	On metal, distance 15 mm	90	80	70
	Flush-mounted in metal; distance all round 25 mm [2]	60	60	50

Transponder		Reader without metal direct metal influence	Reader on metal (metal plate)	Reader flush-mounted in metal (all round 20 mm)
MDS D526 [1]	Without metal	100	100	73
	On metal, distance 25 mm	88	85	68
	Flush-mounted in metal; distance all round 50 mm [3]	65	55	55
MDS D528	Without metal	100	90	90
	On metal, distance 0 mm	90	90	85
MDS D560 [1]	Without metal	100	95	90
	On metal, distance 10 mm	90	85	80

[1] Mounting the transponder on or in metal is only possible with the appropriate spacer or if there is adequate clearance to the metal.

[2] Transponder flush-mounted in metal; minimum distance to reader 5 mm

[3] Transponder flush-mounted in metal; minimum distance to reader 10 mm

[4] Transponder flush-mounted in metal; minimum distance to reader 15 mm

[5] Values > 100 % can occur if transponders were developed specifically for mounting in/on metallic surroundings.

4.3.4.6 RF280R

The RF280R can be flush-mounted in metal. Please allow for a possible reduction in the field data values. To avoid reduction, the distance a should be ≥ 20 mm.

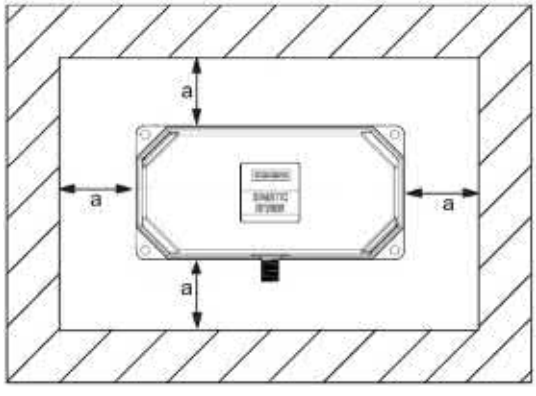

Figure 4-13 Metal-free area RF280R

Table 4- 44 Reduction of field data due to metal, range as %: Transponder and RF280R

Transponder		Reader without metal direct metal influence	Reader on metal (metal plate)	Flush-mounted in metal (20 mm all-round)
MDS D100 1)	Without metal	100	95	80
	On metal; distance 20 mm	65	60	55
	Flush-mounted in metal; distance all round 20 mm 2)	55	50	45
MDS D124 1)	Without metal	100	95	90
	On metal; distance 15 mm	95	90	85
	Flush-mounted in metal; distance all round 20 mm 2)	70	65	50
MDS D126 1)	Without metal	100	90	80
	On metal; distance 25 mm	80	75	70
	Flush-mounted in metal; distance all round 50 mm 3)	75	65	65
MDS D139 1)	Without metal	100	90	75
	On metal; distance 30 mm	95	85	70
	Flush-mounted in metal; distance all round 100 mm 4)	90	80	70
MDS D160 1)	Without metal	100	95	90
	On metal; distance 10 mm 2)	85	85	80
MDS D165	Without metal	100	90	80
	On metal; distance 25 mm 4)	80	75	70
MDS D200 1)	Without metal	100	90	80
	On metal; distance 20 mm	80	75	70
	Flush-mounted in metal; distance all round 20 mm 3)	65	60	55
MDS D261	Without metal	100	95	85
	On metal; distance 25 mm 4)	85	80	75
MDS D324 1)	Without metal	100	95	85
	On metal; distance 15 mm	85	85	80
	Flush-mounted in metal; distance all round 25 mm 2)	70	65	60
MDS D339 1)	Without metal	100	90	80
	On metal; distance 30 mm	85	80	75
	Flush-mounted in metal; distance all round 100 mm 4)	80	75	70
MDS D400 1)	Without metal	100	90	80
	On metal; distance 20 mm	75	70	60
	Flush-mounted in metal; distance all round 20 mm 4)	60	60	55

Transponder		Reader without metal direct metal influence	Reader on metal (metal plate)	Flush-mounted in metal (20 mm all-round)
MDS D423	Without metal	100	95	85
	On metal; distance 0 mm	100[5]	100[5]	90[5]
	Flush-mounted in metal; distance all round 10 mm [2]	75	65	60
MDS D424[1] MDS D524[1]	Without metal	100	90	75
	On metal; distance 15 mm	75	75	60
	Flush-mounted in metal; distance all round 25 mm [2]	60	55	40
MDS D425 MDS D525	Without metal	100	70	90
	On metal; distance 0 mm [2]	75	70	60
MDS D426[1] MDS D526[1]	Without metal	100	90	80
	On metal; distance 25 mm	80	75	70
	Flush-mounted in metal; distance all round 50 mm [3]	75	65	65
MDS D428 MDS D528	Without metal	100	90	80
	On metal; distance 0 mm [2]	85	80	65
MDS D460[1]	Without metal	100	95	80
	On metal; distance 10 mm [2]	80	75	60
MDS D560 [1]	Without metal	100	95	80
	On metal, distance 10 mm [2]	80	75	60

[1] Mounting the transponder on or in metal is only possible with the appropriate spacer or if there is adequate clearance to the metal.

[2] Transponder flush-mounted in metal; minimum distance to reader 5 mm

[3] Transponder flush-mounted in metal; minimum distance to reader 10 mm

[4] Transponder flush-mounted in metal; minimum distance to reader 15 mm

[5] Values > 100 % in relation to non-metal surroundings can occur if transponders were developed specifically for mounting in/on metallic surroundings.

4.3.4.7 RF285R

The RF285R reader is operated with the external antennas ANT D1, D5 and D6. The antennas can be flush-mounted in metal. Please allow for a possible reduction in the field data values. To avoid reduction, the distance a should be observed.

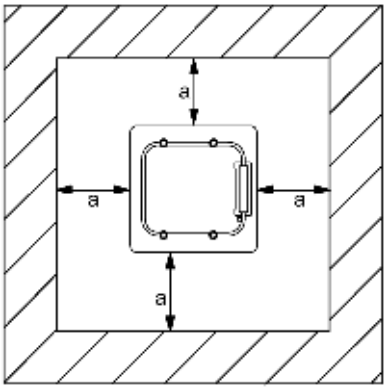

a ≥ 30 mm with ANT D1
≥ 150 mm with ANT D5
≥ 200 mm with ANT D6

Figure 4-14 Metal-free space: Example with ANT D5

Table 4- 45 Reduction of field data due to metal, range as %: Transponder and RF285R with ANT D1

Transponder		Antenna without metal	Antenna on metal	Antenna flush-mounted in metal (all round 30 mm)
MDS D100[1)]	Without metal	100	85	80
	On metal; distance 20 mm	70	60	65
	Flush-mounted in metal; distance all round 20 mm	60	45	45
MDS D124[1)]	Without metal	100	95	85
	On metal; distance 15 mm	85	85	80
	Flush-mounted in metal; distance all round 20 mm	85	80	50
MDS D126[1)]	Without metal	100	85	85
	On metal; distance 25 mm	85	75	75
	Flush-mounted in metal; distance all round 50 mm	80	70	70
MDS D139[1)]	Without metal	100	90	85
	On metal; distance 30 mm	95	85	85
	Flush-mounted in metal; distance all round 100 mm	95	85	85

Transponder		Antenna without metal	Antenna on metal	Antenna flush-mounted in metal (all round 30 mm)
MDS D160[1)]	Without metal	100	95	90
	On metal; distance 10 mm	85	85	80
MDS D165	Without metal	100	85	85
	On metal; distance 25 mm	90	80	75
MDS D200[1)]	Without metal	100	85	80
	On metal; distance 20 mm	85	75	75
	Flush-mounted in metal; distance all round 20 mm	75	65	65
MDS D261	Without metal	100	90	85
	On metal; distance 25 mm	85	80	80
MDS D324[1)]	Without metal	100	85	85
	On metal; distance 15 mm	90	80	80
	Flush-mounted in metal; distance all round 25 mm	80	75	65
MDS D339[1)]	Without metal	100	90	85
	On metal; distance 30 mm	95	85	85
	Flush-mounted in metal; distance all round 100 mm	95	85	85
MDS D400[1)]	Without metal	100	90	85
	On metal; distance 20 mm	80	70	65
	Flush-mounted in metal; distance all round 20 mm	65	60	60
MDS D423	Without metal	100	90	90
	On metal; distance 0 mm	115[2)]	115[2)]	115[2)]
	Flush-mounted in metal; distance all round 0 mm	80	65	65
MDS D424[1)]	Without metal	100	90	75
	On metal; distance 15 mm	85	80	75
	Flush-mounted in metal; distance all round 25 mm	75	70	70
MDS D426[1)]	Without metal	100	90	85
	On metal; distance 25 mm	85	80	75
	Flush-mounted in metal; distance all round 50 mm	80	75	70
MDS D428	Without metal	100	90	85
	On metal; distance 0 mm	85	80	80
MDS D460[1)]	Without metal	100	90	80
	On metal; distance 10 mm	85	80	75

Transponder		Antenna without metal	Antenna on metal	Antenna flush-mounted in metal (all round 30 mm)
MDS D524 1)	Without metal	100	90	75
	On metal; distance 15 mm	85	80	75
	Flush-mounted in metal; distance all round 25 mm	75	70	70
MDS D526 1)	Without metal	100	90	85
	On metal; distance 25 mm	85	80	75
	Flush-mounted in metal; distance all round 50 mm	80	75	70
MDS D528	Without metal	100	90	85
	On metal; distance 0 mm	85	80	80
MDS D560	Without metal	100	90	80
	On metal; distance 10 mm	85	80	75

1) Mounting the transponder on or in metal is only possible with the appropriate spacer or if there is adequate clearance to the metal.

2) Values of > 100 % can occur if transponders were developed specifically for mounting in/on metallic surroundings.

Table 4- 46 Reduction of field data due to metal, range as %: Transponder and RF285R with ANT D5

Transponder		RF285R with ANT D5	
		Antenna on metal (metal plate)	Antenna flush-mounted in metal (all round 150 mm)
MDS D100 1)	Without metal	100	95
	On metal, distance 20 mm	65	60
	Flush-mounted in metal; distance all round 20 mm	45	40
MDS D124 1)	Without metal	100	95
	On metal, distance 15 mm	85	80
	Flush-mounted in metal; distance all round 25 mm	65	60
MDS D126 1)	Without metal	100	95
	On metal, distance 25 mm	70	65
	Flush-mounted in metal; distance all round 50 mm	55	50
MDS D139 1)	Without metal	100	95
	On metal, distance 30 mm	90	85
MDS D160 1)	Without metal	100	95
	On metal, distance 10 mm	70	65

Transponder		RF285R with ANT D5	
		Antenna on metal (metal plate)	Antenna flush-mounted in metal (all round 150 mm)
MDS D165	Without metal	100	95
	On metal, distance 25 mm	65	60
MDS D200 [1]	Without metal	100	95
	On metal, distance 20 mm	65	60
	Flush-mounted in metal; distance all round 20 mm	45	40
MDS D261	Without metal	100	95
	On metal, distance 25 mm	65	60
MDS D324 [1]	Without metal	100	95
	On metal, distance 15 mm	75	70
MDS D339 [1]	Without metal	100	95
	On metal, distance 30 mm	90	85
MDS D400 [1]	Without metal	100	95
	On metal, distance 20 mm	65	60
	Flush-mounted in metal; distance all round 20 mm	45	40
MDS D424 [1]	Without metal	100	95
	On metal, distance 15 mm	75	70
MDS D426 [1]	Without metal	100	95
	On metal, distance 25 mm	70	65
	Flush-mounted in metal; distance all round 50 mm	50	45
MDS D460 [1]	Without metal	100	95
	On metal, distance 10 mm	70	65
MDS D560 [1]	Without metal	100	95
	On metal, distance 10 mm	70	65

[1] Mounting the transponder on or in metal is only possible with the appropriate spacer or if there is adequate clearance to the metal.

Table 4- 47 Reduction of field data due to metal, range as %: Transponder and RF285R with ANT D6

Transponder		RF285R with ANT D6	
		Antenna on metal (metal plate)	Antenna flush-mounted in metal (all round 200 mm)
MDS D100 [1]	Without metal	100	95
	On metal, distance 20 mm	65	60
MDS D124 [1]	Without metal	100	95
	On metal, distance 25 mm	80	75
MDS D126 [1]	Without metal	100	95
	On metal, distance 25 mm	65	60
MDS D139 [1]	Without metal	100	90
	On metal, distance 30 mm	80	70
MDS D160 [1]	Without metal	100	90
	On metal, distance 25 mm	60	55
MDS D165	Without metal	100	95
	On metal, distance 20 mm	50	45
MDS D200 [1]	Without metal	100	95
	On metal, distance 20 mm	65	60
MDS D261	Without metal	100	95
	On metal, distance 20 mm	50	45
MDS D324 [1]	Without metal	100	95
	On metal, distance 25 mm	75	70
MDS D339 [1]	Without metal	100	90
	On metal, distance 30 mm	80	70
MDS D400 [1]	Without metal	100	95
	On metal, distance 20 mm	60	55
MDS D424 [1]	Without metal	100	95
	On metal, distance 25 mm	75	70
MDS D426 [1]	Without metal	100	95
	On metal, distance 25 mm	65	60
MDS D460 [1]	Without metal	100	90
	On metal, distance 25 mm	60	55
MDS D560 [1]	Without metal	100	90
	On metal, distance 25 mm	60	55

[1] Mounting the transponder on or in metal is only possible with the appropriate spacer or if there is adequate clearance to the metal.

4.3.4.8 RF290R

The RF290R reader is operated with the external antennas ANT D1, D5, D6 and D10. The antennas can be flush-mounted in metal. Allow for a possible reduction in the field data. To avoid reduction, the distance a should be observed.

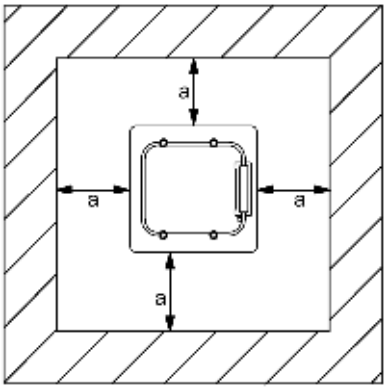

a ≥ 30 mm with ANT D1
≥ 150 mm with ANT D5
≥ 200 mm with ANT D6 and ANT D10

Figure 4-15 Metal-free space: Example with ANT D5

Table 4- 48 Reduction of field data due to metal, range as %: Transponder and RF290R with ANT D1

Transponder		Antenna without metal	Antenna on metal	Antenna flush-mounted in metal (all round 30 mm)
MDS D100[1)]	Without metal	100	85	80
	On metal; distance 20 mm	70	60	65
	Flush-mounted in metal; distance all round 20 mm	60	45	45
MDS D124[1)]	Without metal	100	95	85
	On metal; distance 15 mm	85	85	80
	Flush-mounted in metal; distance all round 20 mm	85	80	50
MDS D126[1)]	Without metal	100	85	85
	On metal; distance 25 mm	85	75	75
	Flush-mounted in metal; distance all round 50 mm	80	70	70
MDS D139[1)]	Without metal	100	90	85
	On metal; distance 30 mm	95	85	85
	Flush-mounted in metal; distance all round 100 mm	95	85	85
MDS D160[1)]	Without metal	100	95	90
	On metal; distance 10 mm	85	85	80
MDS D165	Without metal	100	85	85
	On metal; distance 25 mm	90	80	75
MDS D200[1)]	Without metal	100	85	80
	On metal; distance 20 mm	85	75	75
	Flush-mounted in metal; distance all round 20 mm	75	65	65
MDS D261	Without metal	100	90	85
	On metal; distance 25 mm	85	80	80
MDS D324[1)]	Without metal	100	85	85
	On metal; distance 15 mm	90	80	80
	Flush-mounted in metal; distance all round 25 mm	80	75	65
MDS D339[1)]	Without metal	100	90	85
	On metal; distance 30 mm	95	85	85
	Flush-mounted in metal; distance all round 100 mm	95	85	85
MDS D400[1)]	Without metal	100	90	85
	On metal; distance 20 mm	80	70	65
	Flush-mounted in metal; distance all round 20 mm	65	60	60

Transponder		Antenna without metal	Antenna on metal	Antenna flush-mounted in metal (all round 30 mm)
MDS D423	Without metal	100	90	90
	On metal; distance 0 mm	115[2]	115[2]	115[2]
	Flush-mounted in metal; distance all round 0 mm	80	65	65
MDS D424[1]	Without metal	100	90	75
	On metal; distance 15 mm	85	80	75
	Flush-mounted in metal; distance all round 25 mm	75	70	70
MDS D426[1]	Without metal	100	90	85
	On metal; distance 25 mm	85	80	75
	Flush-mounted in metal; distance all round 50 mm	80	75	70
MDS D428	Without metal	100	90	85
	On metal; distance 0 mm	85	80	80
MDS D460[1]	Without metal	100	90	80
	On metal; distance 10 mm	85	80	75
MDS D524[1]	Without metal	100	90	75
	On metal; distance 15 mm	85	80	75
	Flush-mounted in metal; distance all round 25 mm	75	70	70
MDS D526[1]	Without metal	100	90	85
	On metal; distance 25 mm	85	80	75
	Flush-mounted in metal; distance all round 50 mm	80	75	70
MDS D528	Without metal	100	90	85
	On metal; distance 0 mm	85	80	80
MDS D560	Without metal	100	90	80
	On metal; distance 10 mm	85	80	75

1) Mounting the transponder on or in metal is only possible with the appropriate spacer or if there is adequate clearance to the metal.

2) Values of > 100 % can occur if transponders were developed specifically for mounting in/on metallic surroundings.

Table 4- 49 Reduction of field data due to metal, range as %: Transponder and RF290R with ANT D5

Transponder		RF290R with ANT D5	
		Antenna on metal (metal plate)	Antenna flush-mounted in metal (all round 150 mm)
MDS D100 1)	Without metal	100	95
	On metal, distance 20 mm	65	60
	Flush-mounted in metal; distance all round 20 mm	45	40
MDS D124 1)	Without metal	100	95
	On metal, distance 15 mm	85	80
	Flush-mounted in metal; distance all round 25 mm	65	60
MDS D126 1)	Without metal	100	95
	On metal, distance 25 mm	70	65
	Flush-mounted in metal; distance all round 50 mm	55	50
MDS D139 1)	Without metal	100	95
	On metal, distance 30 mm	90	85
MDS D160 1)	Without metal	100	95
	On metal, distance 10 mm	70	65
MDS D165	Without metal	100	95
	On metal, distance 25 mm	65	60
MDS D200 1)	Without metal	100	95
	On metal, distance 20 mm	65	60
	Flush-mounted in metal; distance all round 20 mm	45	40
MDS D261	Without metal	100	95
	On metal, distance 25 mm	65	60
MDS D324 1)	Without metal	100	95
	On metal, distance 15 mm	75	70
MDS D339 1)	Without metal	100	95
	On metal, distance 30 mm	90	85
MDS D400 1)	Without metal	100	95
	On metal, distance 20 mm	65	60
	Flush-mounted in metal; distance all round 20 mm	45	40
MDS D424 1)	Without metal	100	95
	On metal, distance 15 mm	75	70
MDS D426 1)	Without metal	100	95
	On metal, distance 25 mm	70	65
	Flush-mounted in metal; distance all round 50 mm	50	45

Transponder		RF290R with ANT D5	
		Antenna on metal (metal plate)	Antenna flush-mounted in metal (all round 150 mm)
MDS D460 [1]	Without metal	100	95
	On metal, distance 10 mm	70	65
MDS D524 [1]	Without metal	100	95
	On metal, distance 15 mm	75	70
MDS D526 [1]	Without metal	100	95
	On metal, distance 25 mm	70	65
	Flush-mounted in metal; distance all round 50 mm	50	45
MDS D560 [1]	Without metal	100	95
	On metal, distance 10 mm	70	65

[1] Mounting the transponder on or in metal is only possible with the appropriate spacer or if there is adequate clearance to the metal.

Table 4- 50 Reduction of field data due to metal, range as %: Transponder and RF290R with ANT D6

Transponder		RF290R with ANT D6	
		Antenna on metal (metal plate)	Antenna flush-mounted in metal (all round 200 mm)
MDS D100 [1]	Without metal	100	95
	On metal, distance 20 mm	65	60
MDS D124 [1]	Without metal	100	95
	On metal, distance 25 mm	80	75
MDS D126 [1]	Without metal	100	95
	On metal, distance 25 mm	65	60
MDS D139 [1]	Without metal	100	90
	On metal, distance 30 mm	80	70
MDS D160 [1]	Without metal	100	90
	On metal, distance 25 mm	60	55
MDS D165	Without metal	100	95
	On metal, distance 20 mm	50	45
MDS D200 [1]	Without metal	100	95
	On metal, distance 20 mm	65	60
MDS D261	Without metal	100	95
	On metal, distance 20 mm	50	45
MDS D324 [1]	Without metal	100	95
	On metal, distance 25 mm	75	70

Transponder		RF290R with ANT D6	
		Antenna on metal (metal plate)	Antenna flush-mounted in metal (all round 200 mm)
MDS D339 [1]	Without metal	100	90
	On metal, distance 30 mm	80	70
MDS D400 [1]	Without metal	100	95
	On metal, distance 20 mm	60	55
MDS D424 [1]	Without metal	100	95
	On metal, distance 25 mm	75	70
MDS D426 [1]	Without metal	100	95
	On metal, distance 25 mm	65	60
MDS D524 [1]	Without metal	100	95
	On metal, distance 25 mm	75	70
MDS D526 [1]	Without metal	100	95
	On metal, distance 25 mm	65	60

[1] Mounting the transponder on or in metal is only possible with the appropriate spacer or if there is adequate clearance to the metal.

Table 4- 51 Reduction of field data due to metal, range as %: Transponder and RF290R with ANT D10

Transponder		RF290R with ANT D10	
		Antenna on metal (metal plate)	Antenna flush-mounted in metal (all round 200 mm)
MDS D100 [1]	Without metal	100	95
	On metal, distance 20 mm	50	40
MDS D124 [1]	Without metal	100	90
	On metal, distance 25 mm	70	60
MDS D126 [1]	Without metal	100	95
	On metal, distance 25 mm	65	60
MDS D139 [1]	Without metal	100	90
	On metal, distance 30 mm	80	70
MDS D160 [1]	Without metal	100	90
	On metal, distance 25 mm	60	55
MDS D165	Without metal	100	90
	On metal, distance 20 mm	40	30
MDS D200 [1]	Without metal	100	95
	On metal, distance 20 mm	50	40
MDS D261	Without metal	100	90
	On metal, distance 20 mm	40	30

Transponder		RF290R with ANT D10	
		Antenna on metal (metal plate)	Antenna flush-mounted in metal (all round 200 mm)
MDS D324 [1]	Without metal	100	90
	On metal, distance 25 mm	70	60
MDS D339 [1]	Without metal	100	90
	On metal, distance 30 mm	80	70
MDS D400 [1]	Without metal	100	95
	On metal, distance 20 mm	50	40
MDS D424 [1]	Without metal	100	90
	On metal, distance 25 mm	70	60
MDS D426 [1]	Without metal	100	95
	On metal, distance 25 mm	70	65
MDS D524 [1]	Without metal	100	90
	On metal, distance 25 mm	70	60
MDS D526 [1]	Without metal	100	95
	On metal, distance 25 mm	70	65

[1] Mounting the transponder on or in metal is only possible with the appropriate spacer or if there is adequate clearance to the metal.

4.3.5 Installation and connection of 2 to 6 antennas with one reader

If several antennas need to be operated on one reader, this can be achieved by using the antenna splitter. Up to two antennas can be operated on the RF285R readers by using an antenna splitter, and up to four antennas can be operated on the RF290R readers.

Note that the antenna splitter is a purely passive device that splits the power at the input to two outputs and therefore halves it. This is possible both in PC mode (RS-232) and CM mode (RS-422). You can cascade the antenna splitters in such a way that up to 4 antennas can be connected at the same time.

4.3.5.1 Installation options with the antenna splitter (2-4 antennas)

Possible configurations of the antennas

The antenna installations described here have been designed for reading smartlabels (transponders) on goods on conveyor belts, conveyor systems or pallets.

A prerequisite is that there are no magnetically conducting materials (e.g. metal) in the vicinity of the antenna or the label.

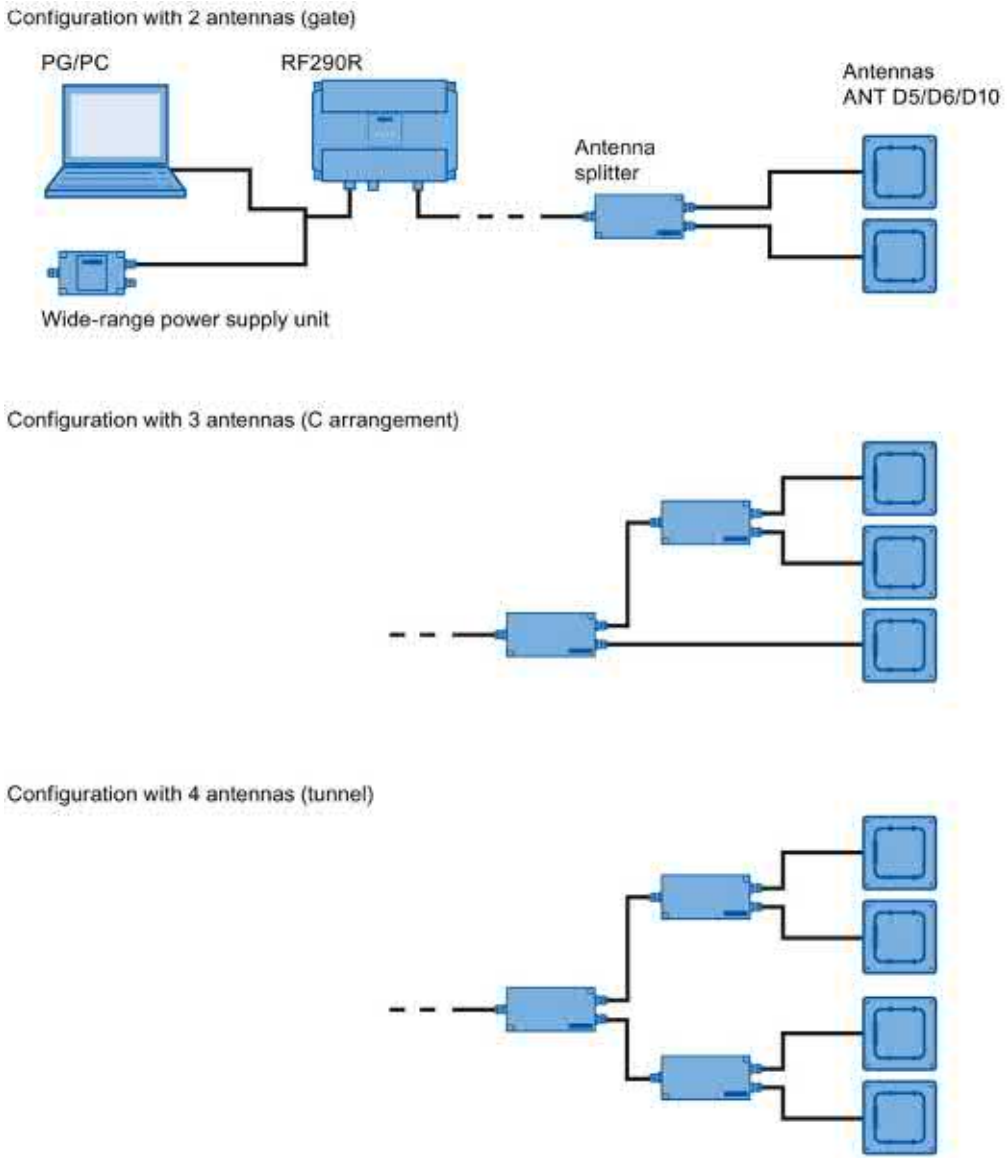

Figure 4-16 Possible configuration of RF290R with ANT D5/D6/D10

Installation examples

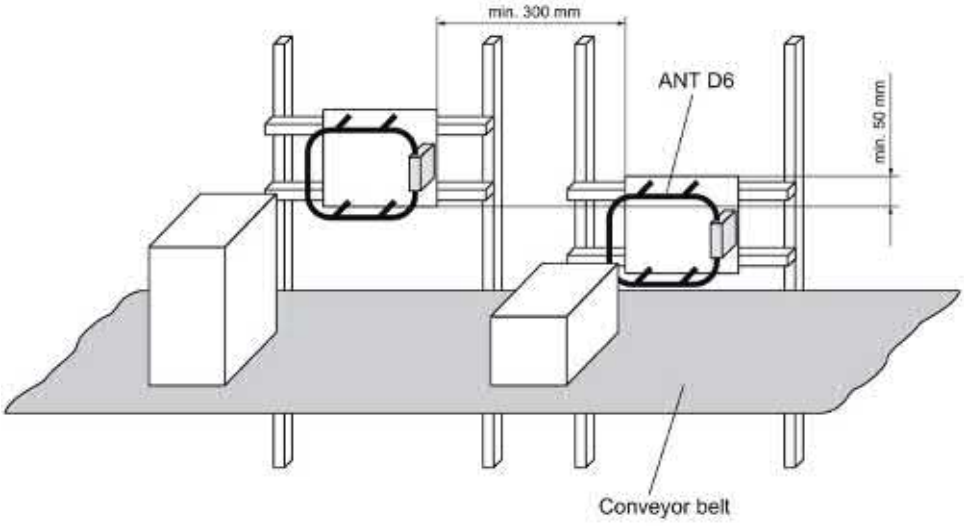

Figure 4-17 Installation example with 2 ANT D6 (portal)

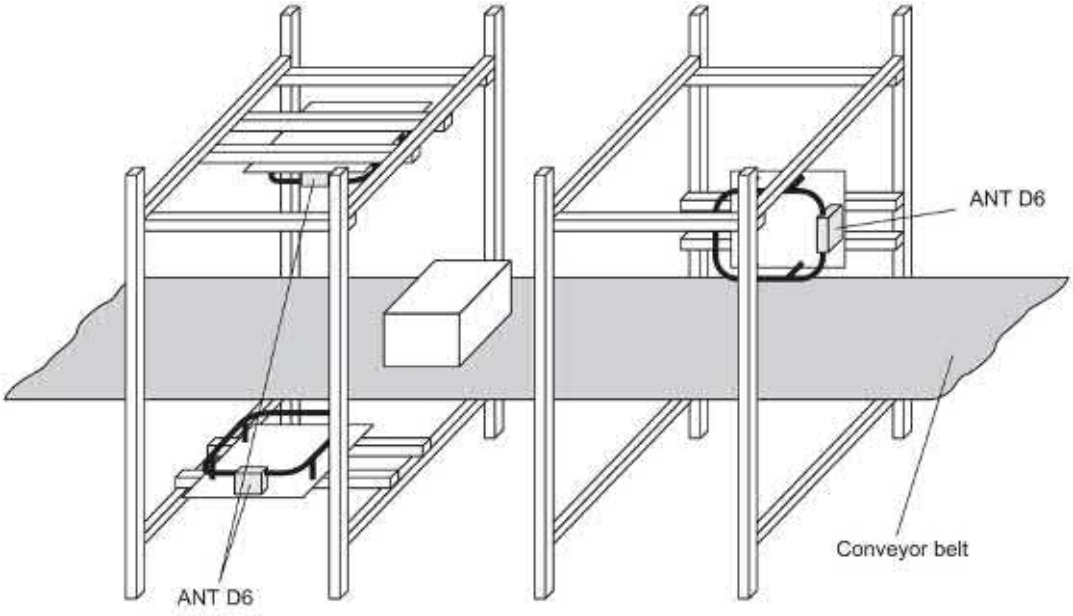

Figure 4-18 Installation example with ANT D6 (C arrangement)

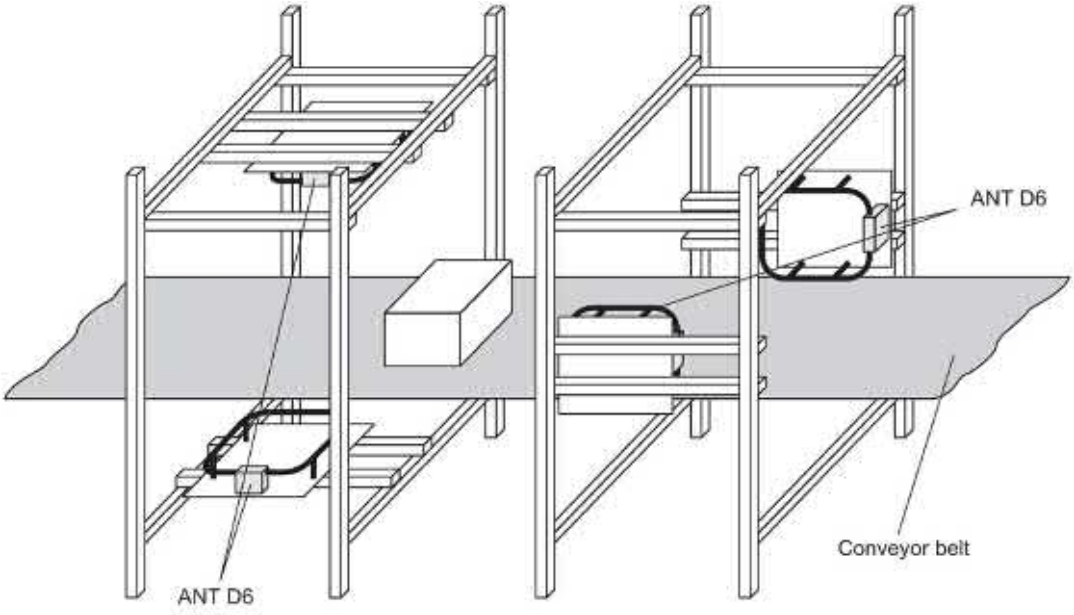

Figure 4-19 Installation example with ANT D6 (tunnel)

Note

The minimum spacings between the antennas for operation with only one reader may be less than the distances described because this configuration has the same phase.

4.3.5.2 Antenna installation

Configuring instructions

The antenna installation described below enables detection of transponders moving horizontally through the installation. Depending on the installation (antennas exactly opposite each other or offset in parallel), the label is aligned in parallel with the antennas or arbitrarily.

The size of the sensing range depends on the label alignment.

Note

Sensing range

Remember that the entire acquisition range of the antenna is larger than the transmission window in which the transponder is normally configured. This means there can be label alignments where even labels outside the transmission window will be identified. Labels aligned in parallel with the antennas, for example, can also be detected at larger distances beside or outside the antenna range.

For this reason, goods with labels must not be stored within a distance of up to 0.5 m from the installation. If this cannot be complied with, the antennas must be shielded.

To achieve three-dimensional detection of the labels in the sensing range, the following requirements must be met:

- The gate width must be less than or equal to 800 mm.
- The antenna size of the labels should be at least the size of an ISO card (85 mm x 54 mm).
- The distance from label to label must be greater than 100 mm. The distance from label to label can be reduced if the gate width is correspondingly reduced. This applies especially for distances under 50 mm.
- There should be no more than 16 labels within the sensing range of the antennas at the same time.
  The number of labels can be increased if the gate width is correspondingly reduced and the maximum speed suitably adapted.
- The maximum speed of the labels must not exceed 1 m/s. (This depends on the number and alignment of the labels, the number of data blocks to be processed, the data protocol required and the label type).
- To the front and sides of the antenna, there must be a distance of more than 150 mm to metal parts.
- There must be no interference to the write/read device from other electrical equipment in the surrounding area.

Note

Multitag capability of the RF290R reader

Note that the RF290R reader is not capable of multitag operation in the CM mode.

NOTICE
Maximum number of connectable antennas Note that a maximum of two antennas can be operated on the RF285R readers by using an antenna splitter. Use the RF290R reader for setups with more antennas.

Required components

For installation with

- 2 antennas (gate)
- 3 antennas (C arrangement)
- 4 antennas (tunnel)

the following components are required:

Table 4- 52 Components required for setting up with 2, 3 or 4 antennas

Number of required components for setup with …			Component	Article number
2 ant.	3 ant.	4 ant.		
1	1	1	Basic device: RF290R (↔ CM or PC)	RF290R: 6GT2821-0AC12 optionally: ASM 475: 6GT2002-0GA10 ASM 456: 6GT2002-0ED00 RF170C: 6GT2002-0HD00 RF180C: 6GT2002-0JD00 RF182C: 6GT2002-0JD10 RF18xC: 6GT2002-0JEx0
2	3	4	Antenna ANT D1 / D5 / D6 / D10	optionally: ANT D1: 6GT2698-5AC00 ANT D5: 6GT2698-5AA10 ANT D6: 6GT2698-5AB00 ANT D10: 6GT2698-5AF00
2	3	4	With ANT D6 if required: cover	6GT2698-5AD00
1	2	3	Antenna splitter	6GT2603-0AC00
1	1	1	Wide-range power supply unit for SIMATIC RF systems (for PC mode only)	EU: 6GT2898-0AC00 UK: 6GT2898-0AC10 US: 6GT2898-0AC20

Number of required components for setup with …			Component	Article number
2 ant.	3 ant.	4 ant.		
1	1	1	24 V connecting cable, length 5 m (for PC mode only)	6GT2491-1HH50
1	1	1	Connecting cable: RF290R ↔ PC or RF290R ↔ CM	6GT2891-4KH ... optionally: 6GT2891-4F ... 6GT2891-4EH ...

Installation information

The cables on the antennas and the antenna splitter are 3.3 m or 10.5 m long. The write/read device must be installed in the vicinity of the antennas. If there are greater distances between the write/read device and the antennas, the antenna cable can be increased by 7.2 m with the extension (6GT2691-0DH72). This results in shorter ranges.

Metal-free space

To guarantee perfect functioning of the individual installation versions, all larger metal parts in the vicinity of the antennas must be removed.

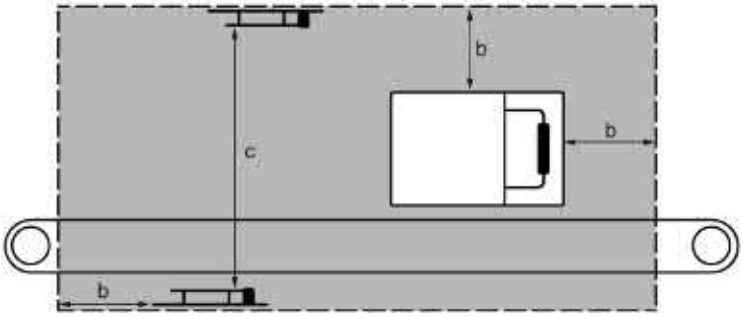

Figure 4-20 Metal-free space, side view (based on the example of a tunnel arrangement on a conveyor belt)

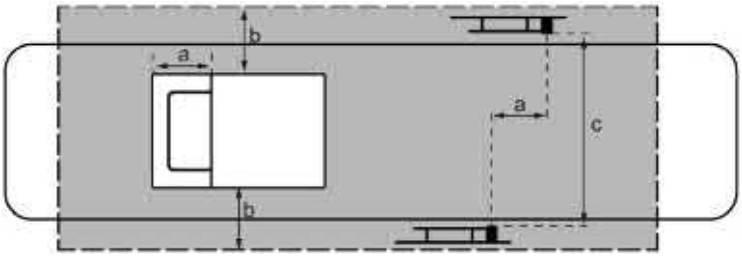

a approx. half antenna length

b min. 100 mm

c max. 600 mm

Metal-free space

Figure 4-21 Metal-free space, view from above (based on the example of a tunnel arrangement on a conveyor belt)

Metal in the vicinity of the antennas

If metal in the vicinity of the antennas cannot be avoided, the following must be noted:

- There must be a minimum allround gap of 100 mm between the antenna and metal. Serious loss of sensing range must be expected above 50 mm. There is no discernible influence at distances greater than 150 mm from the metal.
- The influence of the metal depends heavily on its size and shape. Thin metal rods have less influence on the magnetic field than large surfaces.
- Larger metal surfaces (edge length > 50 mm) in parallel with the antennas or labels result in a short-circuit of the magnetic lines of force. As a result, the labels cannot be read.
- Metal parts under the conveyor belt change the direction of the magnetic lines of force. Serious loss of sensing range must be expected as a result. Horizontally aligned labels cannot be read in such cases.
- **The metal parts must not form closed loops or circuits. If necessary, these must be electrically interrupted at one point**.
- The metal parts in the immediate vicinity of the antenna must be grounded in a mesh with a good HF connection.
- Since the write/read device is installed in a metal housing, and the antennas can couple into the cables to the write/read device, it must be installed at a distance of at least 500 mm from the antennas.

Notes on installing and laying the antenna cable

To suppress possible interference, an EMC hinged ferrite choke must be fitted to the antenna cables (as well as the antenna cable between the reader and the antenna splitter). The coaxial cable must be wound tightly at least four times through the EMC ring core. The maximum distance between the connecting plug for the reader or the antenna splitter and the ring core must be 100 mm.

The antenna cable must always be run vertically from the antennas. A minimum distance of 200 mm to the antennas must be observed as the cables continue. Otherwise, performance losses must be expected.

There must be a distance of at least 300 mm between antenna cables and parallel power cables.

Unrequired cable length must be secured in a bundle with a diameter of 100 to 150 mm.

If the standard antenna cable is too short, it can be increased by 7.20 m with the extension. Slight range losses must be expected here.

To achieve optimal read ranges, the antenna cable should not be shortened or lengthened.

4.4 Chemical resistance of the reader and transponders

4.4.1 Readers

4.4.1.1 Overview of the readers and their housing materials

The following sections describe the chemical resistance of the various transponders. The chemical resistance depends on the housing materials used to manufacture the reader. The following table provides you with an overview of the housing materials that are used with the readers:

Table 4- 53 Overview of the materials of the reader components

Readers	Individual parts of the reader	Material of the component
RF210R RF220R	Sleeves	Brass (copper alloy) CuZn40Pb2
	Fiber-optic cable	Polymethylmethacrylate (Makrolon®2405)
	Cap (antenna)	Thermocomp OF-1008-L-EM
		Valox 357
RF240R RF250R RF260R	Top shell and base plate	Polyamide 6.6 GF30
	Fiber-optic cable	Polymethylmethacrylate (Makrolon®2405)
	Decorative foil [1)]	Polyester
RF280R	Top shell and base plate	Polyamide 12
	Fiber-optic cable	Polymethylmethacrylate (Makrolon®2405)
	Decorative foil [1)]	Polyester
RF285R RF290R	Top cover and bottom	Aluminum
	Decorative membrane	Polyester

[1)] Component irrelevant for resistance of the overall housing

If you have any questions, please contact Siemens Support, see section "Service & Support (Page 458)".

4.4.1.2 Polyester

Table 4- 54 Chemical Resistance - Polyester

Substance	Test conditions		Rating
	Concentration [%]	Temperature [°C]	
Alcohols	-	-	++++
Benzyl alcohols	-	-	○
Ester	-	-	++++
High-pressure steam	-	-	○
Ketones	-	-	++++
Hydrocarbon	-	-	++++
Concentrated alkaline solutions	-	-	○
Diluted alkaline solutions	-	-	++++
Methylene chloride	-	-	○
Concentrated mineral acids	-	-	○
Household cleaner	-	-	++++
Diluted acids	-	-	++++

Explanation of the rating	
++++	Resistant
+++	Practically resistant
++	Conditionally resistant
+	Less resistant
○	Not resistant

4.4.1.3 Polymethylmethacrylate (PMMA)

Table 4- 55 Chemical resistance - Polymethylmethacrylate (PMMA)

Substance	Test conditions		Rating
	Concentration [%]	Temperature [°C]	
Mineral lubricants	-	-	++
Aliphatic hydrocarbons	-	-	++++
Aromatic hydrocarbons	-	-	○
Gasoline	-	-	○
Weak mineral acids	-	-	++++
Strong mineral acids	-	-	○
Weak organic acids	-	-	++++
Strong organic acids	-	-	○
Oxidizing acids	-	-	○
Weak alkaline solutions	-	-	++++
Strong alkaline solutions	-	-	○
Trichloroethylene	-	-	○
Perchloroethylene	-	-	○
Acetone	-	-	○
Alcohols	-	-	○
Hot water (hydrolysis resistance)	-	-	○

Explanation of the rating	
++++	Resistant
+++	Practically resistant
++	Conditionally resistant
+	Less resistant
○	Not resistant

4.4.1.4 Polyamide 6 and Polyamide 6.6 GF30

Table 4- 56 Chemical resistance - PA6 and PA6.6 GF30

Substance	Test conditions		Rating
	Concentration [%]	Temperature [°C]	
Mineral lubricants	-	-	++++
Aliphatic hydrocarbons	-	-	++++
Aromatic hydrocarbons	-	-	++++
Gasoline	-	-	++++
Weak mineral acids	-	-	+++
Strong mineral acids	-	-	○
Weak organic acids	-	-	++
Strong organic acids	-	-	○
Oxidizing acids	-	-	○
Weak alkaline solutions	-	-	++
Strong alkaline solutions	-	-	○
Trichloroethylene	-	-	++++
Perchloroethylene	-	-	++++
Acetone	-	-	++++
Alcohols	-	-	++++
Hot water (hydrolysis resistance)	-	-	++

Explanation of the rating	
++++	Resistant
+++	Practically resistant
++	Conditionally resistant
+	Less resistant
○	Not resistant

4.4.1.5 Polyamide 12

The resistance of the plastic housing to chemicals used in the automobile sector (e.g.: oils, greases, diesel fuel, gasoline, etc,) is not listed extra.

Table 4- 57 Chemical resistance - Polyamide 12

Substance	Test conditions		Rating
	Concentration [%]	Temperature [°C]	
Battery acid	30%	20 °C	++
Ammonia, gaseous	-	60 °C	++++
Ammonia, w.	conc.	60 °C	++++
	10%	60 °C	++++
Benzene	-	20 °C	++++
	-	60 °C	+++
Bleach solution (12.5% effective chlorine)	-	20 °C	++
Butane, gas, liquid	-	60 °C	++++
Butyl acetate (acetic acid butyl ester)	-	60 °C	++++
n(n)	-	20 °C	++++
	-	60 °C	+++
Calcium chloride, w.	-	20 °C	++++
	-	60 °C	+++
Calcium nitrate, w.	c. s.	20 °C	++++
	c. s.	60 °C	+++
Chlorine	-	20 °C	○
Chrome baths, tech.	-	20 °C	○
Iron salts, w.	c. s.	60 °C	++++
Acetic acid, w.	50%	20 °C	○
Ethyl alcohol, w., undenaturated	95%	20 °C	++++
	95%	60 °C	+++
	50%	60 °C	++++
Formaldehyde, w.	30%	20 °C	+++
	10%	20 °C	++++
	10%	60 °C	+++
Formalin	-	20 °C	+++
Glycerine	-	60 °C	++++
Isopropyl alcohol	-	20 °C	++++
	-	60 °C	+++
Potassium hydroxide, w.	50%	60 °C	++++
Lysol	-	20 °C	++
Magnesium salts, w.	c. s.	60 °C	++++
Methyl alcohol, w.	50%	60 °C	++++

Substance	Test conditions		Rating
	Concentration [%]	Temperature [°C]	
Lactic acid, w.	50%	20 °C	++
	10%	20 °C	+++
	10%	60 °C	++
Sodium carbonate, w. (soda)	c. s.	60 °C	++++
Sodium chloride, w.	c. s.	60 °C	++++
Sodium hydroxide	-	60 °C	++++
Nickel salts, w.	c. s.	60 °C	++++
Nitrobenzene	-	20 °C	+++
	-	60 °C	++
Phosphoric acid	10%	20 °C	+
Propane	-	60 °C	++++
Mercury	-	60 °C	++++
Nitric acid	10%	20 °C	+
Hydrochloric acid	10%	20 °C	+
Sulfur dioxide	low	60 °C	++++
Sulfuric acid	25%	20 °C	++
	10%	20 °C	+++
Hydrogen sulfide	low	60 °C	++++
Carbon tetrachloride	-	60 °C	++++
Toluene	-	20 °C	++++
	-	60 °C	+++
Detergent	high	60 °C	++++
Plasticizer	-	60 °C	++++

Explanation of the rating	
++++	Resistant
+++	Practically resistant
++	Conditionally resistant
+	Less resistant
○	Not resistant
w.	Water solution
c. s.	Cold saturated

4.4.2 Transponder

4.4.2.1 Overview of the transponders and their housing materials

The following sections describe the resistance to chemicals of the various transponders. Resistance to chemicals depends on the housing material used to manufacture the transponders.

The following table provides an overview of the housing materials of the transponders:

Table 4- 58 Overview of the housing materials of the transponders

Housing material	Transponder
Polyphenylene sulfide (PPS)	MDS D117 MDS D124 (6GT2600-0AC10) MDS D139 MDS D160 MDS D339 MDS D423 MDS D560
Polycarbonate (PC)	MDS D100 (6GT2600-0AD10)
Polyvinyl chloride (PVC)	MDS D100 (6GT2600-0AD00-0AX0) MDS D200 MDS D400
Epoxy resin	MDS D124 (6GT2600-0AC00) MDS D324 MDS D421 MDS D424 MDS D460 MDS D521 MDS D524
PA6	MDS D127
PA6.6 GF30	MDS D126 MDS D422 MDS D425 MDS D426 MDS D428 MDS D522 MDS D525 MDS D526 MDS D528

Note

Chemical substances not listed

The following sections describe the resistance of the various transponders to specific substances. If you require information about chemical substances that are not listed, contact Customer Support.

4.4.2.2 Epoxy resin

Table 4- 59 Resistance to chemicals - epoxy resin

Substance	Test conditions		Rating
	Concentration [%]	Temperature [°C]	
Allyl chloride	-	20 °C	++++
Formic acid	50%	20 °C	++++
	100%	20 °C	++
Ammonia, gaseous	-	20 °C	++++
Ammonia, liquid, water-free	-	20 °C	○
Ammonium hydroxide	10%	20 °C	++++
Ethanol	-	40 °C	++++
	-	60 °C	++++
Ethyl acrylate	-	20 °C	++++
Ethyl glycol	-	60 °C	++++
Gasoline, aroma-free	-	20 °C	++++
Gasoline, containing benzene	-	20 °C	++++
Benzoates (Na–, Ca– among others)	-	40 °C	++++
Benzoic acid	-	20 °C	++++
Benzene	-	20 °C	++++
Borax	-	60 °C	++++
Boric acid	-	20 °C	++++
Bromine, liquid	-	20 °C	○
Bromides (K–, Na– among others)	-	60 °C	++++
Bromoform	100%	20 °C	++++
Bromine water	-	20 °C	○
Butadien (1.3–)	-	20 °C	++++
Butane, gaseous	-	20 °C	++++
Butanol	-	20 °C	○
Butyric acid	100%	20 °C	++
Carbonates (ammonium–, Na– among others)	-	60 °C	++++
Chlorine, liquid	-	20 °C	○
Chlorine, gaseous, dry	100%	20 °C	○

Substance	Test conditions		Rating
	Concentration [%]	Temperature [°C]	
Chlorobenzene	-	20 °C	++++
Chlorides (ammonium–, Na– among others)	-	60 °C	++++
Chloroform	-	20 °C	○
Chlorophyll	-	20 °C	++++
Chlorosulfuric acid	100%	20 °C	○
Chlorine water (saturated solution)	-	20 °C	++
Chromates (K–, Na– among others)	Up to 50 %	40 °C	++++
Chromic acid	Up to 30 %	20 °C	○
Chromosulfuric acid	-	20 °C	○
Citric acid	-	20 °C	++++
Cyanamide	-	20 °C	++++
Cyanides (K–, Na– among others)	-	60 °C	++++
Dextrin, w.	-	60 °C	++++
Diethyl ether	-	20 °C	++++
Diethylene glycol	-	60 °C	++++
Dimethyl ether	-	20 °C	++++
Dioxane	-	20 °C	○
Developer	-	40 °C	++++
Acetic acid	100%	20 °C	++
Ethanol	-	60 °C	++++
Fixing bath	-	40 °C	++++
Fluorides (ammonium–, K–, Na– among others)	-	40 °C	++++
Hydrofluoric acid	Up to 40 %	20 °C	++++
Formaldehyde	50%	20 °C	++++
Formamide	100%	20 °C	++++
Gluconic acid	-	20 °C	++++
Glycerine	-	60 °C	++++
Glycol	-	60 °C	++++
Urine	-	20 °C	++++
Uric acid	-	20 °C	++++
Hydroxides (ammonium...)	10%	20 °C	++++
Hydroxides (Na–, K–)	40%	20 °C	++++
Hydroxides (alkaline earth metal)	-	60 °C	++++
Hypochlorites (K–, Na– among others)	-	60 °C	++++
Iodides (K–, Na– among others)	-	60 °C	++++
Silicic acid	-	60 °C	++++
Cresol	Up to 90 %	20 °C	○
Methanol	100%	40 °C	++++
Methylene chloride	-	20 °C	○

Substance	Test conditions		Rating
	Concentration [%]	Temperature [°C]	
Lactic acid	100%	20 °C	++
Mineral oils	-	40 °C	++++
Nitrates (ammonium..., K– among others)	-	60 °C	++++
Nitroglycerin	-	20 °C	○
Oxalic acid	-	20 °C	++++
Phenol	1%	20 °C	++++
Phosphates (ammonium..., Na– among others)		60 °C	++++
Phosphoric acid	50%	60 °C	++++
	85%	20 °C	++++
Propanol	-	20 °C	++++
Nitric acid	25%	20 °C	○
Hydrochloric acid	10%	20 °C	○
Brine	-	60 °C	○
Sulfur dioxide	100%	20 °C	++
Carbon disulfide	100%	20 °C	○
Sulfuric acid	40%	20 °C	○
Sulfurous acid	-	20 °C	++
Soap solution	-	60 °C	++++
Sulphates (ammonium..., Na– among others)	-	60 °C	++++
Sulfites (ammonium..., Na– among others)	-	60 °C	○
Tar, aroma-free	-	60 °C	++++
Turpentine	-	20 °C	++++
Trichloroethylene	-	20 °C	○
Hydrogen peroxide	30%	20 °C	++++
Tartaric acid	-	20 °C	++++

Explanation of the rating	
++++	Resistant
+++	Practically resistant
++	Conditionally resistant
+	Less resistant
○	Not resistant

4.4.2.3 Polyamide 6 and Polyamide 6.6 GF30

Table 4- 60 Chemical resistance - PA6 and PA6.6 GF30

Substance	Test conditions		Rating
	Concentration [%]	Temperature [°C]	
Mineral lubricants	-	-	++++
Aliphatic hydrocarbons	-	-	++++
Aromatic hydrocarbons	-	-	++++
Gasoline	-	-	++++
Weak mineral acids	-	-	+++
Strong mineral acids	-	-	○
Weak organic acids	-	-	++
Strong organic acids	-	-	○
Oxidizing acids	-	-	○
Weak alkaline solutions	-	-	++
Strong alkaline solutions	-	-	○
Trichloroethylene	-	-	++++
Perchloroethylene	-	-	++++
Acetone	-	-	++++
Alcohols	-	-	++++
Hot water (hydrolysis resistance)	-	-	++

Explanation of the rating	
++++	Resistant
+++	Practically resistant
++	Conditionally resistant
+	Less resistant
○	Not resistant

4.4.2.4 Polycarbonate (PC)

Table 4- 61 Chemical resistance - polycarbonate (PPS)

Substance	Test conditions		Rating
	Concentration [%]	Temperature [°C]	
Mineral lubricants	-	-	++
Aliphatic hydrocarbons	-	-	++++
Aromatic hydrocarbons	-	-	○
Gasoline	-	-	○
Weak mineral acids	-	-	++++
Strong mineral acids	-	-	++
Weak organic acids	-	-	++++
Strong organic acids	-	-	++
Oxidizing acids	-	-	○
Weak alkaline solutions	-	-	○
Strong alkaline solutions	-	-	○
Trichloroethylene	-	-	○
Perchloroethylene	-	-	○
Acetone	-	-	○
Alcohols	-	-	++
Hot water (hydrolysis resistance)	-	-	○

Explanation of the rating	
++++	Resistant
+++	Practically resistant
++	Conditionally resistant
+	Less resistant
○	Not resistant

4.4.2.5 Polyphenylene sulfide (PPS)

The data memory has special chemical resistance to solutions up to a temperature of 200 °C. A reduction in the mechanical properties has been observed in aqueous solutions of hydrochloric acid (HCl) and nitric acid (HNO3) at 80 °C. The plastic housings are resistant to all types of fuel including methanol.

Table 4- 62 Chemical resistance - polyphenylene sulfide (PPS)

Substance	Test conditions		Rating
	Concentration [%]	Temperature [°C]	
Acetone	-	55 °C	++++
n-Butanol (butyl alcohol)	-	80 °C	++++
Butanone-2 (methyl ethyl ketone)	-	60 °C	++++
n-Butyl acetate	-	80 °C	++++
Brake fluid	-	80 °C	++++
Calcium chloride (saturated)	-	80 °C	++++
Diesel fuel	-	80 °C	++++
Diethyl ether	-	23 °C	++++
Frigen 113	-	23 °C	++++
Anti-freeze	-	120 °C	++++
Kerosene	-	60 °C	++++
Methanol	-	60 °C	++++
Engine oil	-	80 °C	++++
Sodium chloride (saturated)	-	80 °C	++++
Sodium hydroxide	30%	80 °C	++++
Sodium hypochlorite (30 or 180 days)	5%	80 °C	++
	5%	80 °C	-
Sodium hydroxide solution	30%	90 °C	++++
Nitric acid	10%	23 °C	++++
Hydrochloric acid	10%	80 °C	-
Sulfuric acid	10%	23 °C	++++
	10%	80 °C	++
	30%	23 °C	++++
Tested fuels	-	80 °C	++++
FAM testing fluid acc. to DIN 51 604-A Toluene	-	80 °C	++
1, 1, 1-Trichloroethane Xylene	-	80 °C	++++
Zinc chloride (saturated)	-	80 °C	++
	-	75 °C	++++

Explanation of the rating	
++++	Resistant
+++	Practically resistant
++	Conditionally resistant
+	Less resistant
○	Not resistant

4.4.2.6 Polyvinyl chloride (PVC)

Table 4- 63 Chemical resistance - polyvinyl chloride (PVC)

Substance	Test conditions		Rating
	Concentration [%]	Temperature [°C]	
Salt water	5%	-	++++
Sugared water	10%	-	++++
Acetic acid, w.	5%	-	++++
Sodium carbonate, w.	5%	-	++++
Ethyl alcohol, w.	60%	-	++++
Ethylene glycol	50%	-	++++
Fuel B (acc. to ISO 1817)	-	-	++++
Human sweat	-	-	++++

Explanation of the rating	
++++	Resistant
++++	Practically resistant
++	Conditionally resistant
+	Less resistant
○	Not resistant

4.5 Further information

Further information on "Fundamentals of application planning" and "EMC" can be found in RF300 system manual (https://support.industry.siemens.com/cs/ww/en/view/21738946).

Readers

5

NOTICE
Pulling and plugging readers Pull or plug the reader only when the power supply is turned off If this is not observed, under certain conditions, the reader will not start up correctly and communication with a transponder will not be possible.

Note

IO-Link variants of the RF200 readers

The IO-Link variants of the readers are not included in the system manual. You will find these in the "SIMATIC RF200 IO-Link (https://support.industry.siemens.com/cs/ww/en/view/60641859)" operating instructions.

5.1 SIMATIC RF210R

5.1.1 Features

SIMATIC RF210R	Characteristics	
	Design	① RS422 interface ② Status display
	Application	Identification tasks on assembly lines in harsh industrial environments

5.1.2 RF210R ordering data

	Article number
RF210R with RS422 interface (3964R)	6GT2821-1AC10

5.1.3 Pin assignment RF210R with RS422 interface

Pin	Pin Device end 8-pin M12	Assignment
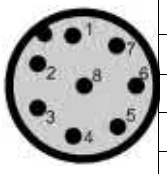	1	+ 24 V
	2	- Transmit
	3	0 V
	4	+ Transmit
	5	+ Receive
	6	- Receive
	7	Unassigned
	8	Ground (shield)

5.1.4 LED operating display

The operational statuses of the reader are displayed by the LEDs. The LED can adopt the colors green, red or yellow and the statuses off, on, flashing:

Table 5- 1 LED operating display on the reader

LED	Meaning
	The reader is turned off.
	Operating voltage present, reader not initialized or antenna switched off
	Operating voltage present, reader initialized and antenna switched on
	• Operating mode "with presence": Transponder present • Operating mode "without presence": Transponder present and command currently being executed
	There is an error. The number of flashes provides information about the current error. You can find more information on error messages in the section "Error codes of the RF200 readers (Page 409)". The optical error display is only reset if the corresponding reset parameter ("option_1 = 2") is set (see product information "SIMATIC RF200 Command Set (https://support.industry.siemens.com/cs/ww/en/view/44864850)").

5.1.5 Minimum distance between RF210R readers

RF210R side by side

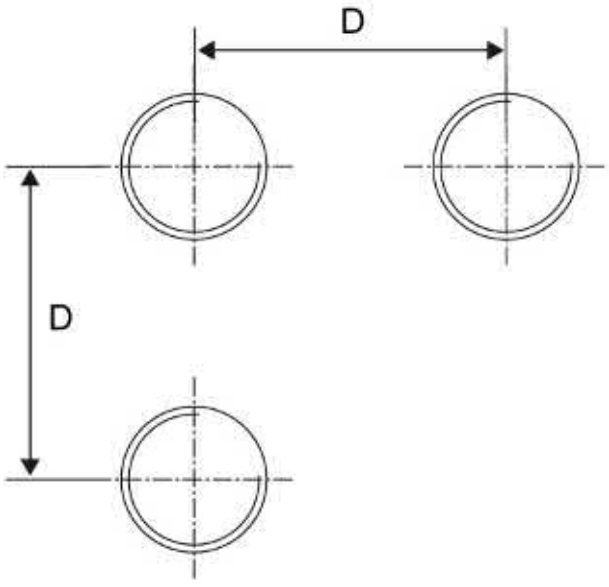

D ≥ 60 mm

Figure 5-1 Minimum distance between RF210R readers

RF210R face to face

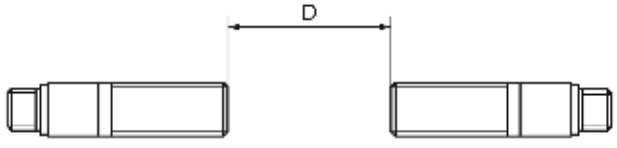

D ≥ 100 mm

Figure 5-2 Face-to-face distance between two RF210Rs

5.1.6 Technical specifications

Table 5- 2 Technical specifications of the RF210R reader

	6GT2821-1AC10
Product type designation	SIMATIC RF210R
Radio frequencies	
Operating frequency, rated value	13.56 MHz
Electrical data	
Maximum range	20 mm
Maximum data transmission speed reader ↔ transponder	ISO transponder
• Read	• approx. 1500 bytes/s
• Write	• approx. 1500 bytes/s
Typical transmission time for user data per byte	
• for write access	• 0.6 ms
• for read access	• 0.6 ms
Transmission speed	19.2, 57.6, 115.2 kBd
Read/write distances of the reader	see section "Field data (Page 39)"
MTBF (Mean Time Between Failures)	505 years
Interfaces	
Electrical connector design	M12, 8-pin
Standard for interfaces for communication	RS-422
Antenna	integrated
Mechanical specifications	
Housing	
• Material	• Brass, nickel-plated
• Color	• Silver
Recommended distance to metal	0 mm
Supply voltage, current consumption, power loss	
Supply voltage	24 VDC
Typical current consumption	50 mA

	6GT2821-1AC10
Permitted ambient conditions	
Ambient temperature	
• During operation	• -20 … +70 °C
• During transportation and storage	• -25 … +85 °C
Degree of protection to EN 60529	IP67
Shock-resistant acc. to EN 60721-3-7, Class 7 M2	500 m/s²
Vibration-resistant acc. to EN 60721-3-7, Class 7 M2	200 m/s²

Design, dimensions and weight	
Dimensions (∅ x thread x L)	M18 x 1 x 83 mm
Weight	65 g
Type of mounting	2x nuts M18 x 1
Cable length for RS-422 interface, maximum	1000 m
LED display design	3-color LED (operating voltage, presence, error)

5.1.7 Approvals

FCC information

Siemens SIMATIC RF210R (MLFB 6GT2821-1AC10) FCC ID NXW-RF210R

This device complies with part 15 of the FCC rules. Operation is subject to the following two conditions:

(1) This device may not cause harmful interference, and

(2) this device must accept any interference received, including interference that may cause undesired operation.

Caution

Any changes or modifications not expressly approved by the party responsible for compliance could void the user's authority to operate the equipment.

Note

This equipment has been tested and found to comply with the limits for a Class A digital device, pursuant to part 15 of the FCC Rules.

These limits are designed to provide reasonable protection against harmful interference when the equipment is operated in a commercial environment. This equipment generates, uses, and can radiate radio frequency energy and, if not installed and used in accordance with the instruction manual, may cause harmful interference to radio communications. Operation of this equipment in a residential area is likely to cause harmful interference in which case the user will be required to correct the interference at his own expense.

IC information

This device complies with Industry Canada licence-exempt RSS standard(s). Operation is subject to the following two conditions:

(1) This device may not cause interference, and

(2) this device must accept any interference, including interference that may cause undesired operation of the device.

Le présent appareil est conforme aux CNR d`Industrie Canada applicables aux appareils radio exempts de licence. L`exploitation est autorisée aux deux conditions suivantes :

(1) L`appareil ne doit pas produire de brouillage, et

(2) l'utilisateur de l`appareil doit accepter tout brouillage radioélectrique subi, même si le brouillage est susceptible d`en compromettre le fonctionnement.

5.1.8 Dimension drawing

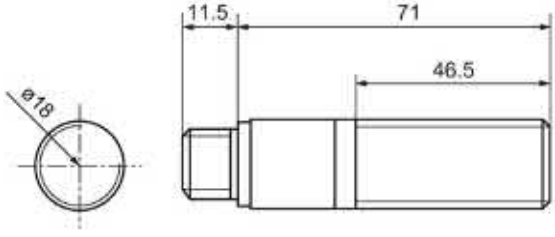

Figure 5-3 RF210R dimension drawing

Dimensions in mm

5.2 SIMATIC RF210M

5.2.1 Features

SIMATIC RF210M	Characteristics	
	Design	① RS422 interface ② Status display
	Application	Reader for hand work and rework places, picking, track and trace, tool Ident

5.2.2 Ordering data RF210M

	Article number
RF210M with RS-422 interface (3964R)	6GT2823-0AA00

5.2.3 Installing the RF210M reader

The following figure shows the completely mounted reader. Note that you can mount the suspension bracket at two different points ①. If you do not mount the handle, we recommend that you close the opening ② with the protective cap.

① Holes for mounting the suspension bracket

② Thread for mounting the handle

Figure 5-4 Installing the reader

5.2.4 Pin assignment RF210M with RS-422 interface

Pin	Pin Device end 8-pin M12	Assignment
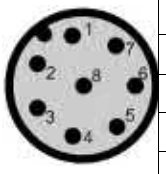	1	+ 24 V
	2	- Transmit
	3	0 V
	4	+ Transmit
	5	+ Receive
	6	- Receive
	7	Unassigned
	8	Ground (shield)

5.2.5 LED operating display

The operational statuses of the reader are displayed by the LEDs. The LED can adopt the colors green, red or yellow and the statuses off, on, flashing:

Table 5- 3 LED operating display on the reader

LED	Meaning
	The reader is turned off.
	Operating voltage present, reader not initialized or antenna switched off
	Operating voltage present, reader initialized and antenna switched on
	• Operating mode "with presence": Transponder present • Operating mode "without presence": Transponder present and command currently being executed
	There is an error. The number of flashes provides information about the current error. You can find more information on error messages in the section "Error codes of the RF200 readers (Page 409)". The optical error display is only reset if the corresponding reset parameter ("option_1 = 2") is set (see product information "SIMATIC RF200 Command Set (https://support.industry.siemens.com/cs/ww/en/view/44864850)").

5.2.6 Technical specifications

Table 5- 4 Technical specifications of the RF210M reader

	6GT2823-0AA00
Product type designation	SIMATIC RF210M
Radio frequencies	
Operating frequency, rated value	13.56 MHz
Electrical data	
Maximum range	20 mm
Maximum data transmission speed reader ↔ transponder	ISO transponder
• Read	• approx. 1500 bytes/s
• Write	• approx. 1500 bytes/s
Typical transmission time for user data per byte	
• for write access	• 0.6 ms
• for read access	• 0.6 ms
Transmission speed	19.2, 57.6, 115.2 kBd
Read/write distances of the reader	see section "Field data (Page 39)"
MTBF (Mean Time Between Failures)	505 years
Interfaces	
Electrical connector design	M12, 8-pin
Standard for interfaces for communication	RS-422
Antenna	integrated
Mechanical specifications	
Housing	
• Material	• POM
• Color	• Black
Supply voltage, current consumption, power loss	
Supply voltage	24 VDC
Typical current consumption	50 mA

	6GT2823-0AA00
Permitted ambient conditions	
Ambient temperature	
• During operation	• -20 … +50 °C
• During transportation and storage	• -25 … +60 °C
Degree of protection to EN 60529	IP54
Shock-resistant acc. to EN 60721-3-7, Class 7 M2	500 m/s²
Vibration-resistant acc. to EN 60721-3-7, Class 7 M2	200 m/s²
Design, dimensions and weight	
Dimensions	
• Reader with handle (L x W x H)	• 195 x 26 x 140 mm
• Reader without handle (L x W x H)	• 195 x 26 x 46 mm
• Spiral connecting cable (L)	• 2 m maximum working length 3.5 m
Weight	460 g
Type of mounting	Bracket for for hanging up
Cable length for RS-422 interface, maximum	1000 m
LED display design	3-color LED (operating voltage, presence, error)

5.2.7 Approvals

FCC information

Siemens SIMATIC RF210R (MLFB 6GT2821-1AC10) FCC ID NXW-RF210R

This device complies with part 15 of the FCC rules. Operation is subject to the following two conditions:

(1) This device may not cause harmful interference, and

(2) this device must accept any interference received, including interference that may cause undesired operation.

Caution

Any changes or modifications not expressly approved by the party responsible for compliance could void the user's authority to operate the equipment.

Note

This equipment has been tested and found to comply with the limits for a Class A digital device, pursuant to part 15 of the FCC Rules.

These limits are designed to provide reasonable protection against harmful interference when the equipment is operated in a commercial environment. This equipment generates, uses, and can radiate radio frequency energy and, if not installed and used in accordance with the instruction manual, may cause harmful interference to radio communications. Operation of this equipment in a residential area is likely to cause harmful interference in which case the user will be required to correct the interference at his own expense.

IC information

This device complies with Industry Canada licence-exempt RSS standard(s). Operation is subject to the following two conditions:

(1) This device may not cause interference, and

(2) this device must accept any interference, including interference that may cause undesired operation of the device.

Le présent appareil est conforme aux CNR d`Industrie Canada applicables aux appareils radio exempts de licence. L`exploitation est autorisée aux deux conditions suivantes :

(1) L`appareil ne doit pas produire de brouillage, et

(2) l'utilisateur de l`appareil doit accepter tout brouillage radioélectrique subi, même si le brouillage est susceptible d`en compromettre le fonctionnement.

5.2.8 Dimension drawing

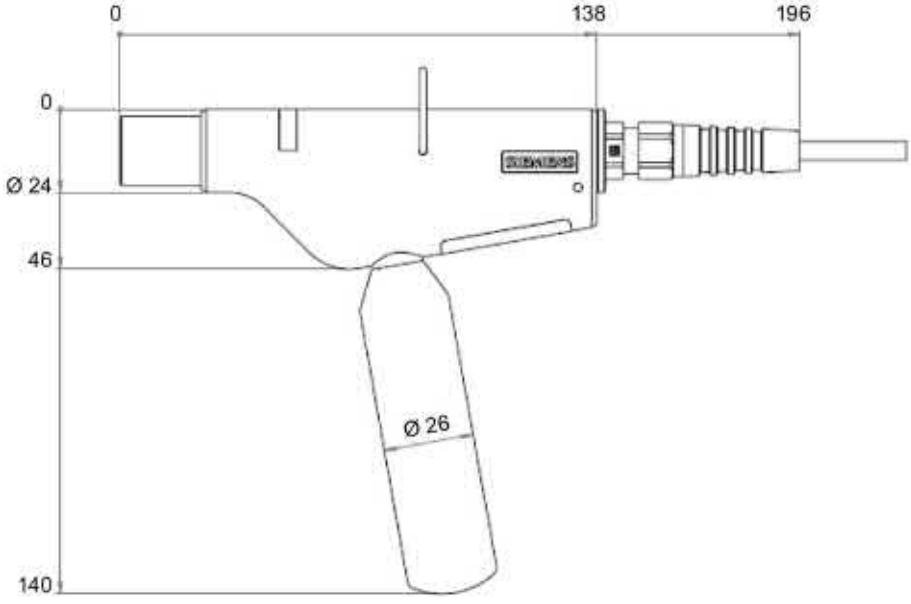

Figure 5-5 Dimension drawing RF210M

All dimensions in mm, tolerances ± 1 mm

5.3 SIMATIC RF220R

5.3.1 Features

SIMATIC RF220R	Characteristics	
	Design	① RS422 interface ② Status display
	Application	Identification tasks on assembly lines in harsh industrial environments

5.3.2 RF220R ordering data

	Article number
RF220R with RS-422 interface (3964R)	6GT2821-2AC10

5.3.3 RF220R pin assignment with RS422 interface

Pin	Pin Device end 8-pin M12	Assignment
	1	+ 24 V
	2	- Transmit
	3	0 V
	4	+ Transmit
	5	+ Receive
	6	- Receive
	7	Unassigned
	8	Ground (shield)

5.3.4 LED operating display

The operational statuses of the reader are displayed by the LEDs. The LED can adopt the colors green, red or yellow and the statuses off, on, flashing:

Table 5- 5 LED operating display on the reader

LED	Meaning
	The reader is turned off.
	Operating voltage present, reader not initialized or antenna switched off
	Operating voltage present, reader initialized and antenna switched on
	• Operating mode "with presence": Transponder present • Operating mode "without presence": Transponder present and command currently being executed
	There is an error. The number of flashes provides information about the current error. You can find more information on error messages in the section "Error codes of the RF200 readers (Page 409)". The optical error display is only reset if the corresponding reset parameter ("option_1 = 2") is set (see product information "SIMATIC RF200 Command Set (https://support.industry.siemens.com/cs/ww/en/view/44864850)").

5.3.5 Minimum distance between RF220R readers

RF220R side by side

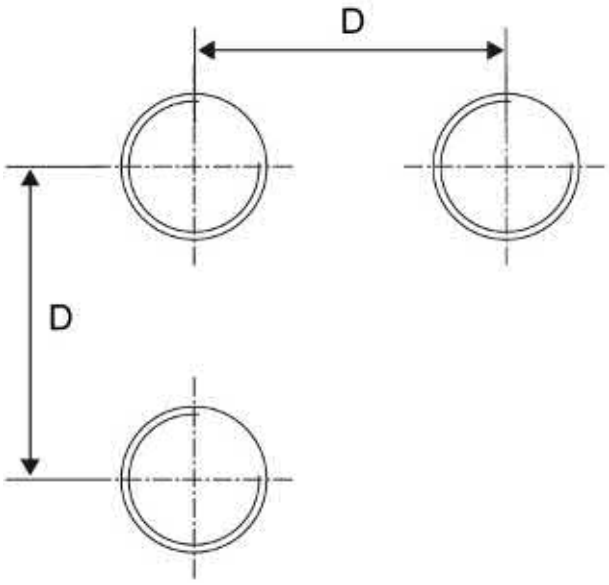

D ≥ 100 mm

Figure 5-6 Minimum distance between RF220R readers

RF220R face to face

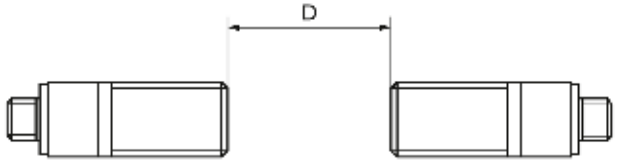

D ≥ 150 mm

Figure 5-7 Face-to-face distance between two RF220Rs

5.3.6 Technical specifications

Table 5- 6 Technical specifications of the RF220R reader

	6GT2821-2AC10
Product type designation	SIMATIC RF220R
Radio frequencies	
Operating frequency, rated value	13.56 MHz
Electrical data	
Maximum range	35 mm
Maximum data transmission speed reader ↔ transponder	ISO transponder
• Read	• approx. 1500 bytes/s
• Write	• approx. 1500 bytes/s
Typical transmission time for user data per byte	
• for write access	• 0.6 ms
• for read access	• 0.6 ms
Transmission speed	19.2, 57.6, 115.2 kBd
Read/write distances of the reader	see section "Field data (Page 39)"
MTBF (Mean Time Between Failures)	501 years
Interfaces	
Electrical connector design	M12, 8-pin
Standard for interfaces for communication	RS-422
Antenna	integrated
Mechanical specifications	
Housing	
• Material	• Brass, nickel-plated
• Color	• Silver
Recommended distance to metal	0 mm
Supply voltage, current consumption, power loss	
Supply voltage	24 VDC
Typical current consumption	50 mA

	6GT2821-2AC10
Permitted ambient conditions	
Ambient temperature	
• During operation	• -20 … +70 °C
• During transportation and storage	• -25 … +85 °C
Degree of protection to EN 60529	IP67
Shock-resistant acc. to EN 60721-3-7, Class 7 M2	500 m/s²
Vibration-resistant acc. to EN 60721-3-7, Class 7 M2	200 m/s²

Design, dimensions and weight	
Dimensions (∅ x thread x L)	M30 x 1.5 x 83 mm
Weight	140 g
Type of mounting	2x nuts M30 x 1.5
Cable length for RS-422 interface, maximum	1000 m
LED display design	3-color LED (operating voltage, presence, error)

5.3.7 Approvals

FCC information

Siemens SIMATIC RF220R (MLFB 6GT2821-2AC10) FCC ID NXW-RF220R

This device complies with part 15 of the FCC rules. Operation is subject to the following two conditions:

(1) This device may not cause harmful interference, and

(2) this device must accept any interference received, including interference that may cause undesired operation.

Caution

Any changes or modifications not expressly approved by the party responsible for compliance could void the user's authority to operate the equipment.

Note

This equipment has been tested and found to comply with the limits for a Class A digital device, pursuant to part 15 of the FCC Rules.

These limits are designed to provide reasonable protection against harmful interference when the equipment is operated in a commercial environment. This equipment generates, uses, and can radiate radio frequency energy and, if not installed and used in accordance with the instruction manual, may cause harmful interference to radio communications. Operation of this equipment in a residential area is likely to cause harmful interference in which case the user will be required to correct the interference at his own expense.

IC information

This device complies with Industry Canada licence-exempt RSS standard(s). Operation is subject to the following two conditions:

(1) This device may not cause interference, and

(2) this device must accept any interference, including interference that may cause undesired operation of the device.

Le présent appareil est conforme aux CNR d`Industrie Canada applicables aux appareils radio exempts de licence. L`exploitation est autorisée aux deux conditions suivantes :

(1) L`appareil ne doit pas produire de brouillage, et

(2) l'utilisateur de l`appareil doit accepter tout brouillage radioélectrique subi, même si le brouillage est susceptible d`en compromettre le fonctionnement.

5.3.8 Dimension drawing

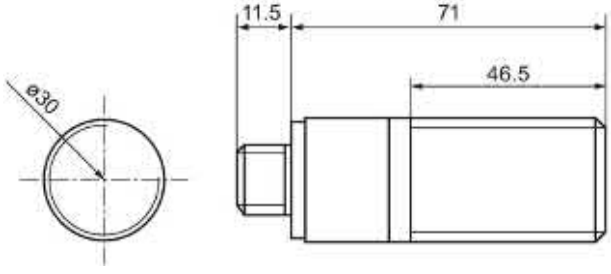

Figure 5-8 RF220R dimension drawing

Dimensions in mm

5.4 SIMATIC RF240R

5.4.1 Features

SIMATIC RF240R	Characteristics	
	Structure	① RS-422 or RS-232 interface ② Operating indicator
	Field of application	Identification tasks on assembly lines in harsh industrial environments

5.4.2 RF240R ordering data

	Article number
RF240R with RS-422 interface (3964R)	6GT2821-4AC10
RF240R with RS-232 interface (3964R)	6GT2821-4AC11
RF240R with RS-232 interface (ASCII)	6GT2821-4AC40

5.4.3 Pin assignment RF240R

Pin	Pin Device end 8-pin M12	Interface assignment	
		RS-422	RS-232
	1	+24 V	+24 V
	2	- Transmit	RXD
	3	0 V	0 V
	4	+ Transmit	TXD
	5	+ Receive	Unassigned
	6	- Receive	Unassigned
	7	Unassigned	Unassigned
	8	Ground (shield)	Ground (shield)

5.4.4 LED operating display

The operational statuses of the reader are displayed by the LEDs. The LED can adopt the colors green, red or yellow and the statuses off, on, flashing:

Table 5- 7 LED operating display on the reader

LED	Meaning
	The reader is turned off.
	Operating voltage present, reader not initialized or antenna switched off
	Operating voltage present, reader initialized and antenna switched on
	• Operating mode "with presence": Transponder present • Operating mode "without presence": Transponder present and command currently being executed
	There is an error. The number of flashes provides information about the current error. You can find more information on error messages in the section "Error codes of the RF200 readers (Page 409)". The optical error display is only reset if the corresponding reset parameter ("option_1 = 2") is set (see product information "SIMATIC RF200 Command Set (https://support.industry.siemens.com/cs/ww/en/view/44864850)").

5.4.5 Minimum distance between several RF240R readers

RF240R readers side by side

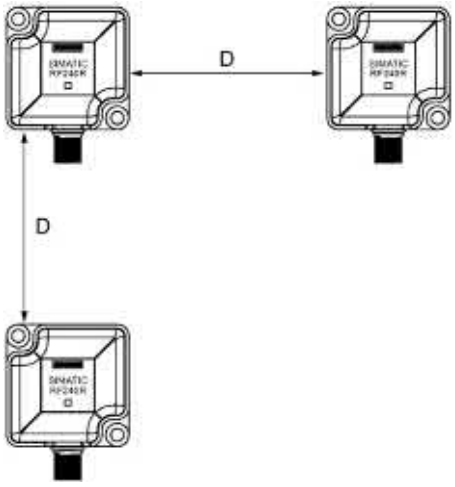

D ≥ 120 mm (with 2 readers)

D ≥ 200 mm (with more than 2 readers)

Figure 5-9 Minimum distance between several RF240R readers

RF240R face-to-face

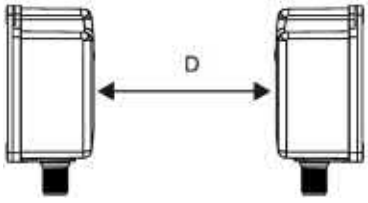

D ≥ 400 mm

Figure 5-10 Face-of-face distance between two RF240R readers

5.4.6 Technical specifications

Table 5- 8 Technical specifications of the RF240R reader

		6GT2821-4AC10 6GT2821-4AC11 6GT2821-4AC40
Product type designation	SIMATIC RF240R	
Radio frequencies		
Operating frequency, rated value	13.56 MHz	
Electrical data		
Maximum range	65 mm	
Maximum data transmission speed reader ↔ transponder	ISO transponder	
• Read	• approx. 1500 bytes/s	
• Write	• approx. 1500 bytes/s	
Typical transmission time for user data per byte		
• for write access	• 0.6 ms	
• for read access	• 0.6 ms	
Transmission speed	19.2, 57.6, 115.2 kBd	
Read/write distances of the reader	see section "Field data (Page 39)"	
MTBF (Mean Time Between Failures)	430 years	
Interfaces		
Electrical connector design	M12, 8-pin	
Standard for interfaces for communication		
• 6GT2821-4AC10	• RS-422 (3964R protocol)	
• 6GT2821-4AC11	• RS-232 (3964R protocol)	
• 6GT2821-4AC40	• RS-232 (ASCII protocol)	
Antenna	integrated	
Mechanical specifications		
Housing		
• Material	• Plastic PA 6.6	
• Color	• Anthracite	
Recommended distance to metal	0 mm	

	6GT2821-4AC10 6GT2821-4AC11 6GT2821-4AC40
Supply voltage, current consumption, power loss	
Supply voltage	24 VDC
Typical current consumption	25 mA
Permitted ambient conditions	
Ambient temperature	
• During operation	• -20 … +70 °C
• During transportation and storage	• -25 … +85 °C
Degree of protection to EN 60529	IP67
Shock-resistant acc. to EN 60721-3-7, Class 7 M2	500 m/s^2
Vibration-resistant acc. to EN 60721-3-7, Class 7 M2	200 m/s^2
Design, dimensions and weight	
Dimensions (L x W x H)	50 × 50 × 30 mm
Weight	60 g
Type of mounting	2 x M5 screw 1.5 Nm
Cable length, maximum	• RS-422: max. 1000 m • RS-232: max. 30 m
LED display design	3-color LED (operating voltage, presence, error)

5.4.7 Approvals

FCC information

Siemens SIMATIC RF240R (MLFB 6GT2821-4AC10) FCC ID NXW-RF240R

Siemens SIMATIC RF240R (MLFB 6GT2821-4AC11) FCC ID NXW-RF240R

Siemens SIMATIC RF240R (MLFB 6GT2821-4AC40) FCC ID NXW-RF240R

This device complies with part 15 of the FCC rules. Operation is subject to the following two conditions:

(1) This device may not cause harmful interference, and

(2) this device must accept any interference received, including interference that may cause undesired operation.

Caution

Any changes or modifications not expressly approved by the party responsible for compliance could void the user's authority to operate the equipment.

Note

This equipment has been tested and found to comply with the limits for a Class A digital device, pursuant to part 15 of the FCC Rules.

These limits are designed to provide reasonable protection against harmful interference when the equipment is operated in a commercial environment. This equipment generates, uses, and can radiate radio frequency energy and, if not installed and used in accordance with the instruction manual, may cause harmful interference to radio communications. Operation of this equipment in a residential area is likely to cause harmful interference in which case the user will be required to correct the interference at his own expense.

IC information

This device complies with Industry Canada licence-exempt RSS standard(s). Operation is subject to the following two conditions:

(1) This device may not cause interference, and

(2) this device must accept any interference, including interference that may cause undesired operation of the device.

Le présent appareil est conforme aux CNR d`Industrie Canada applicables aux appareils radio exempts de licence. L`exploitation est autorisée aux deux conditions suivantes :

(1) L`appareil ne doit pas produire de brouillage, et

(2) l'utilisateur de l`appareil doit accepter tout brouillage radioélectrique subi, même si le brouillage est susceptible d`en compromettre le fonctionnement.

5.4.8 Dimension drawing

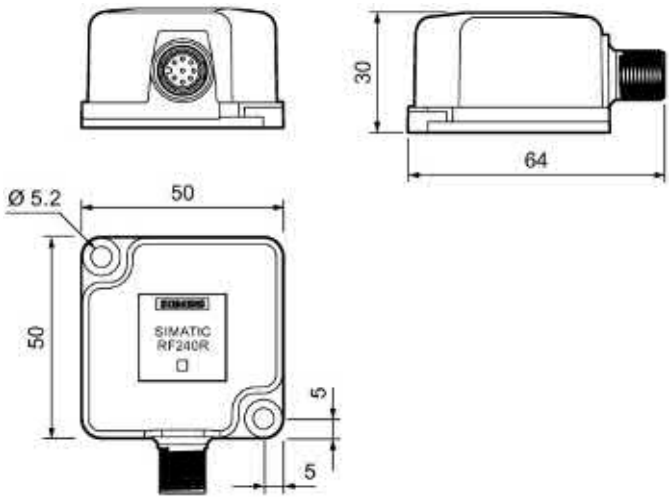

Figure 5-11 Dimension drawing RF240R

Dimensions in mm

5.5 SIMATIC RF250R

5.5.1 Features

SIMATIC RF250R	Characteristics	
	Structure	① RS-422 or RS-232 interface ② Operating indicator ③ Antenna connector, M8
	Area of application	Identification tasks on assembly lines in harsh industrial environments

Note

Reader requires external antennas

Note that the RF250R reader is designed only for operation with external antennas and can only be operated in conjunction with the antennas ANT 3, ANT 8, ANT 12, ANT 18 or ANT 30.

5.5.2 Ordering data RF250R

	Article number
RF250R with RS-422 interface (3964R)	6GT2821-5AC10
RF250R with RS-232 interface (ASCII)	6GT2821-5AC40

5.5.3 Pin assignment RF250R

Pin	Pin Device end 8-pin M12	Interface assignment	
		RS-422	RS-232
	1	+24 V	+24 V
	2	- Transmit	RXD
	3	0 V	0 V
	4	+ Transmit	TXD
	5	+ Receive	Unassigned
	6	- Receive	Unassigned
	7	Unassigned	Unassigned
	8	Ground (shield)	Ground (shield)

5.5.4 LED operating display

The operational statuses of the reader are displayed by the LEDs. The LED can adopt the colors green, red or yellow and the statuses off, on, flashing:

Table 5- 9 LED operating display on the reader

LED	Meaning
	The reader is turned off.
	Operating voltage present, reader not initialized or antenna switched off
	Operating voltage present, reader initialized and antenna switched on
	• Operating mode "with presence": Transponder present • Operating mode "without presence": Transponder present and command currently being executed
	There is an error. The number of flashes provides information about the current error. You can find more information on error messages in the section "Error codes of the RF200 readers (Page 409)". The optical error display is only reset if the corresponding reset parameter ("option_1 = 2") is set (see product information "SIMATIC RF200 Command Set (https://support.industry.siemens.com/cs/ww/en/view/44864850)").

5.5.5 Technical specifications

Table 5- 10 Technical specifications of the RF250R reader

		6GT2821-5AC10 6GT2821-5AC40
Product type designation	SIMATIC RF250R	
Radio frequencies		
Operating frequency, rated value	13.56 MHz	
Electrical data		
Maximum range	35 mm	
Maximum data transmission speed reader ↔ transponder	ISO transponder	
• Read	• approx. 1500 bytes/s	
• Write	• approx. 1500 bytes/s	
Typical transmission time for user data per byte		
• for write access	• 0.6 or 1.2 ms	
• for read access	• 0.6 or 1.2 ms	
Transmission speed	19.2, 57.6, 115.2 kBd	
Read/write distances of the reader	see section "Field data (Page 39)"	
MTBF (Mean Time Between Failures)	430 years	
Interfaces		
Electrical connector design	M8, 4-pin	
Standard for interfaces for communication		
• RS-422	• 3964R protocol	
• RS-232	• ASCII protocol	
Antenna	external, ANT 8, ANT 12, ANT 18, ANT 30 can be connected	
Mechanical specifications		
Housing		
• Material	• Plastic PA 6.6	
• Color	• Anthracite	
Recommended distance to metal	0 mm	
Supply voltage, current consumption, power loss		
Supply voltage	24 VDC	
Typical current consumption	50 mA	

	6GT2821-5AC10 6GT2821-5AC40
Permitted ambient conditions	
Ambient temperature	
• During operation	• -20 … +70 °C
• During transportation and storage	• -25 … +85 °C
Degree of protection to EN 60529	IP65
Shock-resistant acc. to EN 60721-3-7, Class 7 M2	500 m/s^2
Vibration-resistant acc. to EN 60721-3-7, Class 7 M2	200 m/s^2

Design, dimensions and weight	
Dimensions (L x W x H)	50 × 50 × 30 mm
Weight	60 g
Type of mounting	2 x M5 screw 1.5 Nm
Cable length, maximum	• RS-422: max. 1000 m • RS-232: max. 30 m
LED display design	3-color LED

5.5.6 Approvals

FCC information

Siemens SIMATIC RF250R (MLFB 6GT2821-5AC10) FCC ID NXW-RF250R

Siemens SIMATIC RF250R (MLFB 6GT2821-5AC40) FCC ID NXW-RF250R

This device complies with part 15 of the FCC rules. Operation is subject to the following two conditions:

(1) This device may not cause harmful interference, and

(2) this device must accept any interference received, including interference that may cause undesired operation.

Caution

Any changes or modifications not expressly approved by the party responsible for compliance could void the user's authority to operate the equipment.

Note

This equipment has been tested and found to comply with the limits for a Class A digital device, pursuant to part 15 of the FCC Rules.

These limits are designed to provide reasonable protection against harmful interference when the equipment is operated in a commercial environment. This equipment generates, uses, and can radiate radio frequency energy and, if not installed and used in accordance with the instruction manual, may cause harmful interference to radio communications. Operation of this equipment in a residential area is likely to cause harmful interference in which case the user will be required to correct the interference at his own expense.

IC information

This device complies with Industry Canada licence-exempt RSS standard(s). Operation is subject to the following two conditions:

(1) This device may not cause interference, and

(2) this device must accept any interference, including interference that may cause undesired operation of the device.

Le présent appareil est conforme aux CNR d`Industrie Canada applicables aux appareils radio exempts de licence. L`exploitation est autorisée aux deux conditions suivantes :

(1) L`appareil ne doit pas produire de brouillage, et

(2) l'utilisateur de l`appareil doit accepter tout brouillage radioélectrique subi, même si le brouillage est susceptible d`en compromettre le fonctionnement.

If the antenna is detachable, require the following two conditions:

(1) To reduce potential radio interference to other users, the antenna type should be chosen that the radiated power is not more than that permitted for successful communication.

(2) This device has been designed to operate with the antennas listed below. Antennas not included in this list are strictly prohibited for use with this device. The required antenna impedance is 50 Ω.

Si l'antenne est amovible, demandez les deux conditions suivantes :

(1) Afin de réduire le risque d'interférence aux autres utilisateurs, il faut choisir le type d'antenne et son gain de façon à ce que la puissance rayonnée ne soit pas supérieure au niveau requis pour l'obtention d'une communication satisfaisante.

(2) Ce dispositif a été conçu pour fonctionner avec les antennes énumérées ci-dessous. Les antennes non incluses dans cette liste sont strictement interdites pour l'exploitation de ce dispositif. L'impéance d'antenne requise est 50 Ω.

5.5.7 Dimension drawing

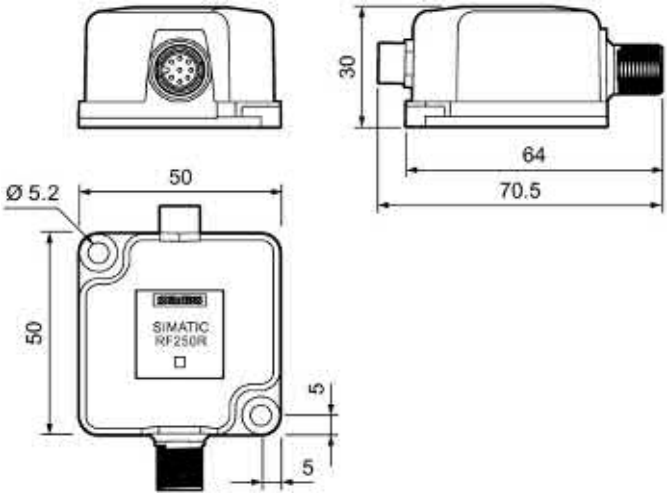

Figure 5-12 Dimension drawing RF250R

Dimensions in mm

5.6 SIMATIC RF260R

5.6.1 Features

SIMATIC RF260R	Characteristics	
	Structure	① RS-422 or RS-232 interface ② Operating indicator
	Field of application	Identification tasks on assembly lines in harsh industrial environments

5.6.2 Ordering data for RF260R

	Article number
RF260R with RS-422 interface (3964R)	6GT2821-6AC10
RF260R with RS-232 interface (3964R)	6GT2821-6AC11
RF260R with RS-232 interface (ASCII)	6GT2821-6AC40

5.6.3 Pin assignment RF260R

Pin	Pin Device end 8-pin M12	Interface assignment	
		RS-422	RS-232
	1	+24 V	+24 V
	2	- Transmit	RXD
	3	0 V	0 V
	4	+ Transmit	TXD
	5	+ Receive	Unassigned
	6	- Receive	Unassigned
	7	Unassigned	Unassigned
	8	Ground (shield)	Ground (shield)

5.6.4 LED operating display

The operational statuses of the reader are displayed by the LEDs. The LED can adopt the colors green, red or yellow and the statuses off, on, flashing:

Table 5- 11 LED operating display on the reader

LED	Meaning
	The reader is turned off.
	Operating voltage present, reader not initialized or antenna switched off
	Operating voltage present, reader initialized and antenna switched on
	• Operating mode "with presence": Transponder present • Operating mode "without presence": Transponder present and command currently being executed
	There is an error. The number of flashes provides information about the current error. You can find more information on error messages in the section "Error codes of the RF200 readers (Page 409)". The optical error display is only reset if the corresponding reset parameter ("option_1 = 2") is set (see product information "SIMATIC RF200 Command Set (https://support.industry.siemens.com/cs/ww/en/view/44864850)").

5.6.5 Minimum distance between several RF260R

RF260R side by side

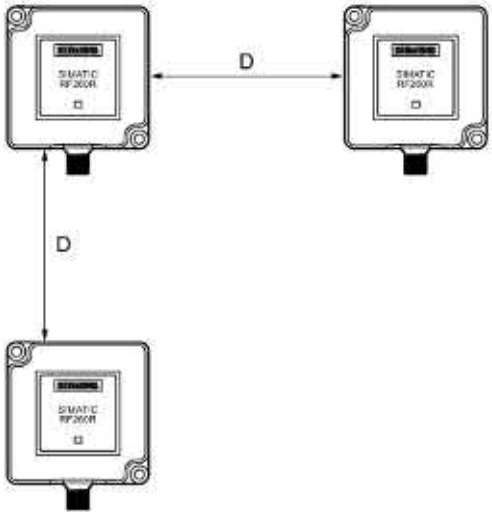

D ≥ 150 mm (with 2 readers)

D ≥ 250 mm (with more than 2 readers)

Figure 5-13 Minimum distance between several RF260R

RF260R face to face

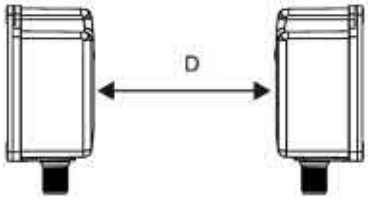

D ≥ 500 mm

Figure 5-14 Face-to-face distance between two RF260R

5.6.6 Technical specifications

Table 5- 12 Technical data of the RF260R reader

		6GT2821-6AC10 6GT2821-6AC11 6GT2821-6AC40
Product type designation	SIMATIC RF260R	
Radio frequencies		
Operating frequency, rated value	13.56 MHz	
Electrical data		
Maximum range	135 mm	
Maximum data transmission speed reader ↔ transponder	ISO transponder	
• Read	• approx. 1500 bytes/s	
• Write	• approx. 1500 bytes/s	
Typical transmission time for user data per byte		
• for write access	• 0.6 ms	
• for read access	• 0.6 ms	
Transmission speed	19.2, 57.6, 115.2 kBd	
Read/write distances of the reader	see section "Field data (Page 39)"	
MTBF (Mean Time Between Failures)	480 years	
Interfaces		
Electrical connector design	M12, 8-pin	
Standard for interfaces for communication		
• 6GT2821-6AC10	• RS-422 (3964R protocol)	
• 6GT2821-6AC11	• RS-232 (3964R protocol)	
• 6GT2821-6AC40	• RS-232 (ASCII protocol)	
Antenna	integrated	
Mechanical specifications		
Housing		
• Material	• Plastic PA 6.6	
• Color	• Anthracite	
Recommended distance to metal	0 mm	

	6GT2821-6AC10 6GT2821-6AC11 6GT2821-6AC40
Supply voltage, current consumption, power loss	
Supply voltage	24 VDC
Typical current consumption	50 mA
Permitted ambient conditions	
Ambient temperature	
• During operation	• -20 … +70 °C
• During transportation and storage	• -25 … +80 °C
Degree of protection to EN 60529	IP67
Shock-resistant acc. to EN 60721-3-7, Class 7 M2	500 m/s^2
Vibration-resistant acc. to EN 60721-3-7, Class 7 M2	200 m/s^2
Design, dimensions and weight	
Dimensions (L x W x H)	75 × 75 × 41 mm
Weight	200 g
Type of mounting	2 x M5 screw 1.5 Nm
Cable length, maximum	• RS-422: max. 1000 m • RS-232: max. 30 m
LED display design	3-color LED (operating voltage, presence, error)

5.6.7 Approvals

FCC information

Siemens SIMATIC RF260R (MLFB 6GT2821-6AC10) FCC ID NXW-RF260R

Siemens SIMATIC RF260R (MLFB 6GT2821-6AC11) FCC ID NXW-RF260R

Siemens SIMATIC RF260R (MLFB 6GT2821-6AC40) FCC ID NXW-RF260R

This device complies with part 15 of the FCC rules. Operation is subject to the following two conditions:

(1) This device may not cause harmful interference, and

(2) this device must accept any interference received, including interference that may cause undesired operation.

Caution

Any changes or modifications not expressly approved by the party responsible for compliance could void the user's authority to operate the equipment.

Note

This equipment has been tested and found to comply with the limits for a Class A digital device, pursuant to part 15 of the FCC Rules.

These limits are designed to provide reasonable protection against harmful interference when the equipment is operated in a commercial environment. This equipment generates, uses, and can radiate radio frequency energy and, if not installed and used in accordance with the instruction manual, may cause harmful interference to radio communications. Operation of this equipment in a residential area is likely to cause harmful interference in which case the user will be required to correct the interference at his own expense.

IC information

This device complies with Industry Canada licence-exempt RSS standard(s). Operation is subject to the following two conditions:

(1) This device may not cause interference, and

(2) this device must accept any interference, including interference that may cause undesired operation of the device.

Le présent appareil est conforme aux CNR d`Industrie Canada applicables aux appareils radio exempts de licence. L`exploitation est autorisée aux deux conditions suivantes :

(1) L`appareil ne doit pas produire de brouillage, et

(2) l'utilisateur de l`appareil doit accepter tout brouillage radioélectrique subi, même si le brouillage est susceptible d`en compromettre le fonctionnement.

5.6.8 Dimension drawing

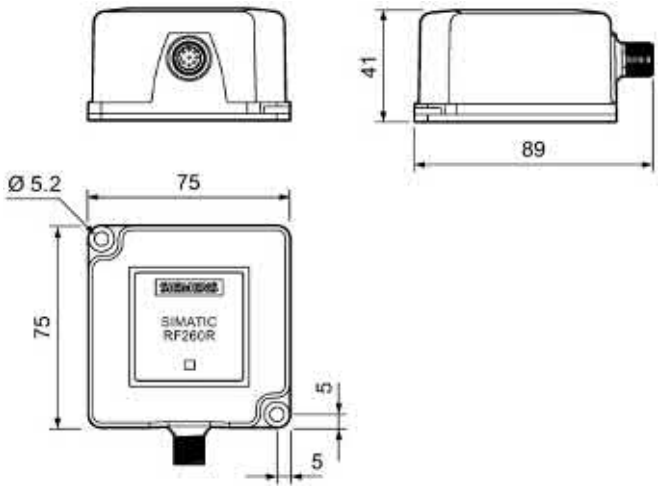

Figure 5-15 Dimension drawing RF260R

Dimensions in mm

5.7 SIMATIC RF280R

5.7.1 Features

SIMATIC RF280R	Characteristics	
	Design	① RS-422 or RS-232 interface ② Operating indicator
	Field of application	Identification tasks on assembly lines in harsh industrial environments

5.7.2 Ordering data RF280R

	Article number
RF280R with RS422 interface (3964R)	6GT2821-8AC10
RF280R with RS232 interface (ASCII)	6GT2821-8AC40

5.7.3 Pin assignment RF280R

Pin	Pin Device end 8-pin M12	Interface assignment	
		RS-422	RS-232
	1	+24 V	+24 V
	2	- Transmit	RXD
	3	0 V	0 V
	4	+ Transmit	TXD
	5	+ Receive	Unassigned
	6	- Receive	Unassigned
	7	Unassigned	Unassigned
	8	Ground (shield)	Ground (shield)

5.7.4 LED operating display

The operational statuses of the reader are displayed by the LEDs. The LED can adopt the colors green, red or yellow and the statuses off, on, flashing:

Table 5- 13 LED operating display on the reader

LED	Meaning
	The reader is turned off.
	Operating voltage present, reader not initialized or antenna switched off
	Operating voltage present, reader initialized and antenna switched on
	• Operating mode "with presence": Transponder present • Operating mode "without presence": Transponder present and command currently being executed
	There is an error. The number of flashes provides information about the current error. You can find more information on error messages in the section "Error codes of the RF200 readers (Page 409)". The optical error display is only reset if the corresponding reset parameter ("option_1 = 2") is set (see product information "SIMATIC RF200 Command Set (https://support.industry.siemens.com/cs/ww/en/view/44864850)").

5.7.5 Minimum distance between RF280R readers

RF280R side-by-side

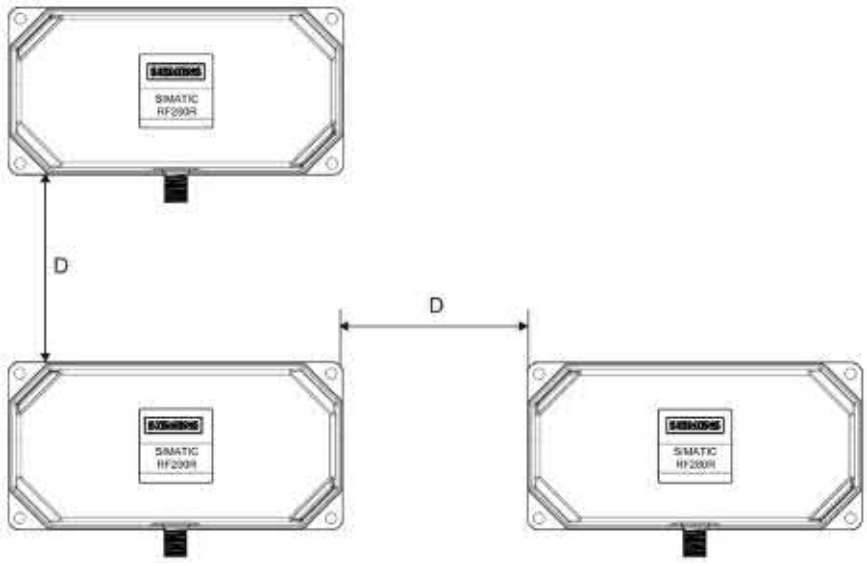

D ≥ 150 mm (with 2 readers)

D ≥ 250 mm (with more than 2 readers)

Figure 5-16 Minimum distance between RF280R readers

RF280R Face-to-Face

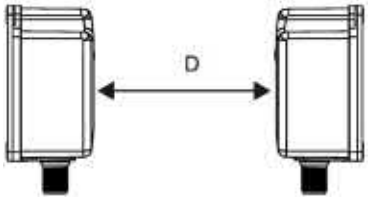

D ≥ 800 mm

Figure 5-17 Face-to-face distance between two RF280R

5.7.6 Technical specifications

Table 5- 14 Technical specifications of the RF280R reader

		6GT2821-8AC10 6GT2821-8AC40
Product type designation	SIMATIC RF280R	
Radio frequencies		
Operating frequency, rated value	13.56 MHz	
Electrical data		
Maximum range	200 mm	
Maximum data transmission speed reader ↔ transponder	ISO transponder	
• Read	• approx. 1500 bytes/s	
• Write	• approx. 1500 bytes/s	
Typical transmission time for user data per byte		
• for write access	• 0.6 ms	
• for read access	• 0.6 ms	
Transmission speed	19.2, 57.6, 115.2 kBd	
Read/write distances of the reader	see section "Field data (Page 39)"	
MTBF (Mean Time Between Failures)	172.6 years	
Interfaces		
Electrical connector design	M12, 8-pin	
Standard for interfaces for communication		
• 6GT2821-6AC10	• RS-422 (3964R protocol)	
• 6GT2821-6AC40	• RS-232 (ASCII protocol)	
Antenna	integrated	
Mechanical specifications		
Housing		
• Material	• Plastic PA 12	
• Color	• TI grey	
Recommended distance to metal	0 mm	
Supply voltage, current consumption, power loss		
Supply voltage	24 VDC	
Typical current consumption	130 mA	

	6GT2821-8AC10 6GT2821-8AC40
Permitted ambient conditions	
Ambient temperature	
• During operation	• -25 … +70 °C
• During transportation and storage	• -40 … +85 °C
Degree of protection to EN 60529	IP67
Shock-resistant acc. to EN 60721-3-7, Class 7 M2	500 m/s^2
Vibration-resistant acc. to EN 60721-3-7, Class 7 M2	200 m/s^2

Design, dimensions and weight	
Dimensions (L x W x H)	160 x 80 x 41 mm
Weight	470 g
Type of mounting	4x screws M5 ≤ 1.5 Nm
Cable length, maximum	• RS-422: max. 1000 m • RS-232: max. 30 m
LED display design	3-color LED (operating voltage, presence, error)
Standards, specifications, approvals	
Proof of suitability	Radio according to R&TTE directives EN 300330, EN 301489, CE, FCC, UL/CSA

5.7.7 Approvals

FCC information

Siemens SIMATIC RF280R (MLFB 6GT2821-8AC10) FCC ID NXW-RF280R

Siemens SIMATIC RF280R (MLFB 6GT2821-8AC40) FCC ID NXW-RF280R

This device complies with part 15 of the FCC rules. Operation is subject to the following two conditions:

(1) This device may not cause harmful interference, and

(2) this device must accept any interference received, including interference that may cause undesired operation.

Caution

Any changes or modifications not expressly approved by the party responsible for compliance could void the user's authority to operate the equipment.

Note

This equipment has been tested and found to comply with the limits for a Class A digital device, pursuant to part 15 of the FCC Rules.

These limits are designed to provide reasonable protection against harmful interference when the equipment is operated in a commercial environment. This equipment generates, uses, and can radiate radio frequency energy and, if not installed and used in accordance with the instruction manual, may cause harmful interference to radio communications. Operation of this equipment in a residential area is likely to cause harmful interference in which case the user will be required to correct the interference at his own expense.

IC information

This device complies with Industry Canada licence-exempt RSS standard(s). Operation is subject to the following two conditions:

(1) This device may not cause interference, and

(2) this device must accept any interference, including interference that may cause undesired operation of the device.

Le présent appareil est conforme aux CNR d`Industrie Canada applicables aux appareils radio exempts de licence. L`exploitation est autorisée aux deux conditions suivantes :

(1) L`appareil ne doit pas produire de brouillage, et

(2) l'utilisateur de l`appareil doit accepter tout brouillage radioélectrique subi, même si le brouillage est susceptible d`en compromettre le fonctionnement.

5.7.8 Dimension drawing

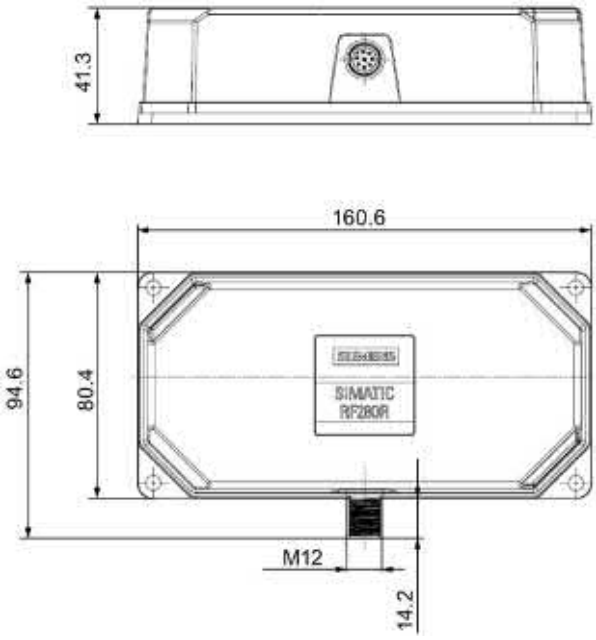

Figure 5-18 Dimensional drawing of RF280R

Dimensions in mm

5.8 SIMATIC RF285R

5.8.1 Characteristics

SIMATIC RF285R	Characteristics	
	Design	① RS 232 interface, 24 V power supply ② Antenna connection, TNC ③ Operating display, 4 LEDs: • Power (PWR) • Active (ACT) • Present (PRE) • Error (ERR)
	Field of application	Identification tasks in production control and in intralogistics, e.g. skid identification, container management Multitag mode is possible.

Note

Reader requires external antennas

Note that the RF285R reader is designed only for operation with external antennas and can only be operated in conjunction with the antennas ANT D1, D5 or D6.

5.8.2 Ordering data

Table 5- 15 RF285R ordering data

	Article number
RF285R with RS232 interface for PC	6GT2821-7AC12

Table 5- 16 Ordering data for RF285R accessories

		Article number
24 V - connecting cable	5 m	6GT2491-1HH50
RS232 connecting cable, with 4-pin M12 connector for 24 V for connection to the wide-range power supply unit	5 m	6GT2891-4KH50
RS232 connecting cable with open cable ends for 24 V	5 m	6GT2891-4KH50-0AX0
Adapter for mounting on a DIN rail (pack of 3)		6GK5798-8ML00-0AB3
Wide-range power supply unit for SIMATIC RF systems (100 - 240 VAC / 24 VDC / 3 A) with country-specific power cable/plug, 2 m		EU: 6GT2898-0AC00 UK: 6GT2898-0AC10 US: 6GT2898-0AC20
Antennas		
Antenna ANT D1		6GT2698-5AC00
Antenna ANT D5		6GT2698-5AA10
Antenna ANT D6		6GT2698-5AB00
Covering hood for ANT D6		6GT2690-0AD00
Antenna cables		
Antenna cable	3.3 m	6GT2691-0CH33
	10.5 m	6GT2691-0CN10
Antenna cable extension	7.2 m	6GT2691-0DH72

5.8.3 Pin assignment

RS232

Table 5- 17 Pin assignment of the RS232 interface

Pin	Pin Device end 8-pin M12	Pin assignment RS232
	1	+24 V
	2	RXD
	3	0 V / GND
	4	TXD
	5	Unassigned
	6	Unassigned
	7	0 V
	8	Earth (shield)

5.8.4 LED operating display

The LEDs indicate the reader's operating states. The LED can appear green, red, or yellow and have the off, on, or flashing status.

Table 5- 18 LED operating display on the reader

Label	LED	Meaning
PWR		The reader is turned off.
PWR		Supply voltage is on
ACT		Communication on the data line
PRE		Transponder present
ERR		Error when connecting the antenna or the interference level in the antenna environment is too high

5.8.5 Installing the RF285R reader

5.8.5.1 Wall mounting

Use the holes in the housing to screw the device to the wall or onto a horizontal surface. The position of the drill holes is shown in the following figure:

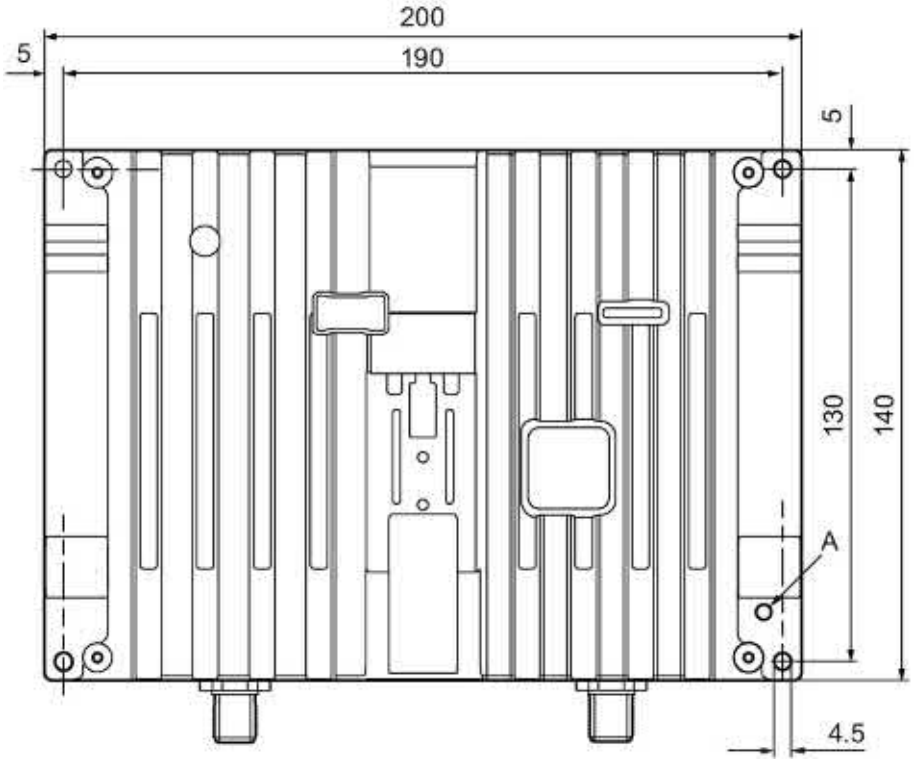

Figure 5-19 Drilling pattern for the RF285R (dimensions in mm)

A: M4 threaded socket for potential connection of the reader. You will find additional information on the potential connection in the section "Further information (Page 120)".

5.8.5.2 Installing on the S7-300 standard rail

Follow the steps below to mount the RF285R reader on a vertical S7-300 standard rail:

1. Place the device on the upper edge of the S7-300 standard rail (position A).
2. Screw the device to the mounting rail (position B).

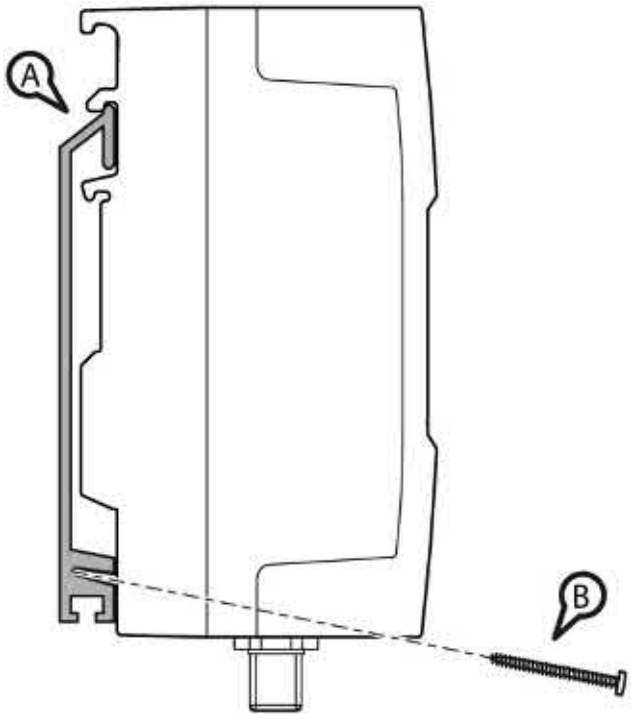

Figure 5-20 Installing the RF285R reader on the S7-300 standard rail

5.8.5.3 Installing on a standard mounting rail

The RF285R reader is suitable for installation on 35 mm rails that comply with DIN EN 50022.

Note

The adapter for mounting on a DIN rail is not supplied with the RF285R

The adapter for mounting on a DIN rail is not supplied with the product. You can obtain a pack of three with the following article number: 6GK5798-8ML00-0AB3.

The adapter consists of the following parts:

- 1 DIN rail slider
- 1 spring
- 2 screws

Fit the adapter to the rear of the device as shown in the following figure:

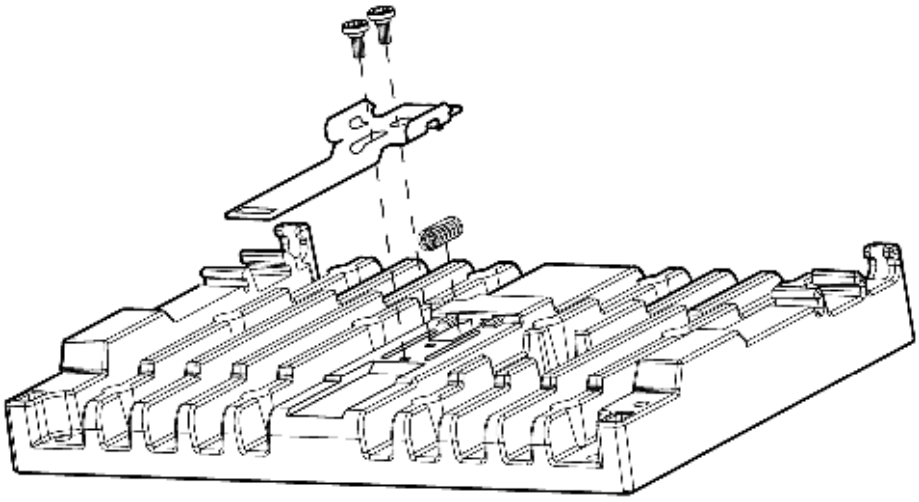

Figure 5-21 Mounting the DIN rail adapter

Follow the steps below to mount the RF285R reader on a DIN rail:

1. Place the device on the upper edge of the DIN rail (position A).
2. Pull the spring-mounted DIN rail slider (position B) down and press the device against the DIN rail until it locks in place.

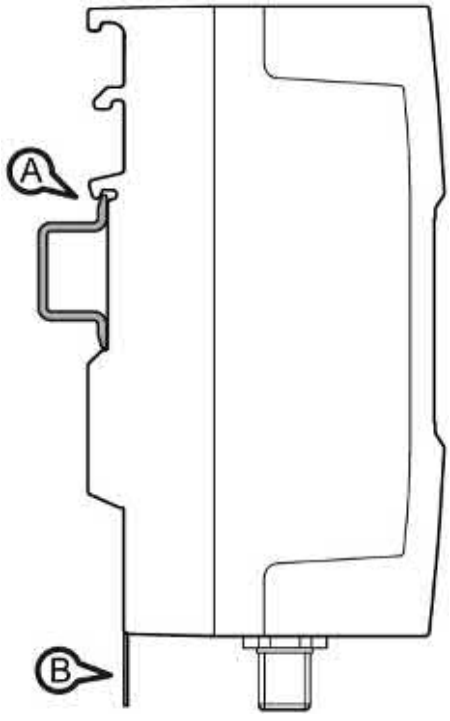

Figure 5-22 Installing the RF285R reader on a DIN rail

5.8.6 Technical specifications

Table 5- 19 Technical specifications of the RF285R reader

	6GT2821-7AC12
Product type designation	SIMATIC RF285R
Radio frequencies	
Operating frequency, rated value	13.56 MHz
Electrical data	
Maximum range	550 mm
Maximum data transmission speed Reader ↔ transponder	ISO transponder
• Read	• Approx. 1500 bytes/s
• Write	• Approx. 1500 bytes/s
Typical transmission time for user data per byte	
• for write access	• 0.6 ms
• for read access	• 0.6 ms
Multitag capability	Yes
Transmission speed	19.2, 57.6, 115.2 kBd
Read/write distances of the reader	See section "Field data (Page 39)"
MTBF (Mean Time Between Failures)	18 years
Interfaces	
Electrical connector design	M12, 8-pin
Standard for interfaces for communication	RS232
Antenna	external ANT D1, D5 or D6 can be connected
Antenna connection	TNC socket
Mechanical specifications	
Housing	
• Material	• Aluminum die-casting
• Color	• Silver/anthracite
Recommended distance to metal	0 mm
Supply voltage, current consumption, power loss	
Supply voltage	24 V DC (± 10%)
Typical current consumption	200 mA (at 24 V and 2 W transmit power)

	6GT2821-7AC12
Permitted ambient conditions	
Ambient temperature	
• During operation	• -20 … +55 °C
• During transportation and storage	• -25 … +85 °C
Degree of protection according to EN 60529	IP65
Shock-resistant acc. to EN 60721-3-7, Class 7 M2	300 m/s²
Vibration-resistant acc. to EN 60721-3-7, Class 7 M2	20 m/s²

Design, dimensions and weight	
Dimensions (W x H x D)	200 × 80 × 140 mm
Weight	1.8 kg
Type of mounting	2 x M5 screw ≤ 1.5 Nm
Cable length, maximum	RS232: max. 30 m
LED display design	4 LEDs

5.8.7 Approvals

FCC information

Siemens SIMATIC RF285R (MLFB 6GT2821-7AC12) FCC ID NXW-RF285R

This device complies with part 15 of the FCC rules. Operation is subject to the following two conditions:

(1) This device may not cause harmful interference, and

(2) this device must accept any interference received, including interference that may cause undesired operation.

Caution

Any changes or modifications not expressly approved by the party responsible for compliance could void the user's authority to operate the equipment.

Note

This equipment has been tested and found to comply with the limits for a Class A digital device, pursuant to part 15 of the FCC Rules.

These limits are designed to provide reasonable protection against harmful interference when the equipment is operated in a commercial environment. This equipment generates, uses, and can radiate radio frequency energy and, if not installed and used in accordance with the instruction manual, may cause harmful interference to radio communications. Operation of this equipment in a residential area is likely to cause harmful interference in which case the user will be required to correct the interference at his own expense.

IC information

This device complies with Industry Canada licence-exempt RSS standard(s). Operation is subject to the following two conditions:

(1) This device may not cause interference, and

(2) this device must accept any interference, including interference that may cause undesired operation of the device.

Le présent appareil est conforme aux CNR d`Industrie Canada applicables aux appareils radio exempts de licence. L`exploitation est autorisée aux deux conditions suivantes :

(1) L`appareil ne doit pas produire de brouillage, et

(2) l'utilisateur de l`appareil doit accepter tout brouillage radioélectrique subi, même si le brouillage est susceptible d`en compromettre le fonctionnement.

If the antenna is detachable, require the following two conditions:

(1) To reduce potential radio interference to other users, the antenna type should be chosen that the radiated power is not more than that permitted for successful communication.

(2) This device has been designed to operate with the antennas listed below. Antennas not included in this list are strictly prohibited for use with this device. The required antenna impedance is 50 Ω.

Si l'antenne est amovible, demandez les deux conditions suivantes :

(1) Afin de réduire le risque d'interférence aux autres utilisateurs, il faut choisir le type d'antenne et son gain de façon à ce que la puissance rayonnée ne soit pas supérieure au niveau requis pour l'obtention d'une communication satisfaisante.

(2) Ce dispositif a été conçu pour fonctionner avec les antennes énumérées ci-dessous. Les antennes non incluses dans cette liste sont strictement interdites pour l'exploitation de ce dispositif. L'impéance d'antenne requise est 50 Ω.

This radio transmitter RF285R has been approved by Industry Canada to operate with the antenna types listed below with the maximum permissible gain indicated. Antenna type not included in this list, having a gain greater than the maximum gan indicated for that type, are strictly prohibited for use with the device.

Used antennas:

- ANT D1, max. gain: 0dB
- ANT D5, max. gain: 0dB
- ANT D6, max. gain: 0dB

Ce transmetteur radio RF285R a été approuvé par Industrie Canada pour fonctionner avec les types d'antenne énumérés ci-dessous avec le gain maximal admissible indiqué. Le type d'antenne non inclus dans cette liste, dont le gain est supérieur au gan maximum indiqué pour ce type, est strictement interdit pour l'utilisation avec l'appareil.

Antennes utilisées:

- ANT D1, max. gain: 0dB
- ANT D5, max. gain: 0dB
- ANT D6, max. gain: 0dB

5.8.8 Note on using the RF285R as a replacement for SLG D11

The RF285R reader is the successor to the MOBY D readers SLG D11 rounding off the RF200 family; it is operated with external antennas. The following properties distinguish the RF285R from the SLG D11:

Table 5- 20 Differences between the RF285R readers and SLG D11

Properties of SLG D11	Properties of RF285R
M12, 4-pin male connector for the power supply 9-pin D-sub male connector for connection to a PC	M12, 8-pin male connector for the power supply and for direct connection to a PC [1]
No operating display via LEDs	Operating display via four LEDs
Maximum transmit power of 1 W	Maximum transmit power of 2 W
One securing option	Different securing options
Standard protocol in ISO host mode (in PC mode)	Advanced protocol in ISO host mode (in PC mode) [2]
Support of up to 2 Kb memory size of "ICode1" and "TagIt" as well as ISO 15693-compatible transponders	Support of up to 8 Kb memory size of ISO 15693-compatible transponders

[1] The RF285R reader connectors are compatible with the SLG D11 in conjunction with a Y connecting cable (6GT2891-4KH50, 6GT2891-4KH50-0AX0).

[2] In ISO host mode (in PC mode), program adaptation is necessary

5.8.9 Dimension drawing

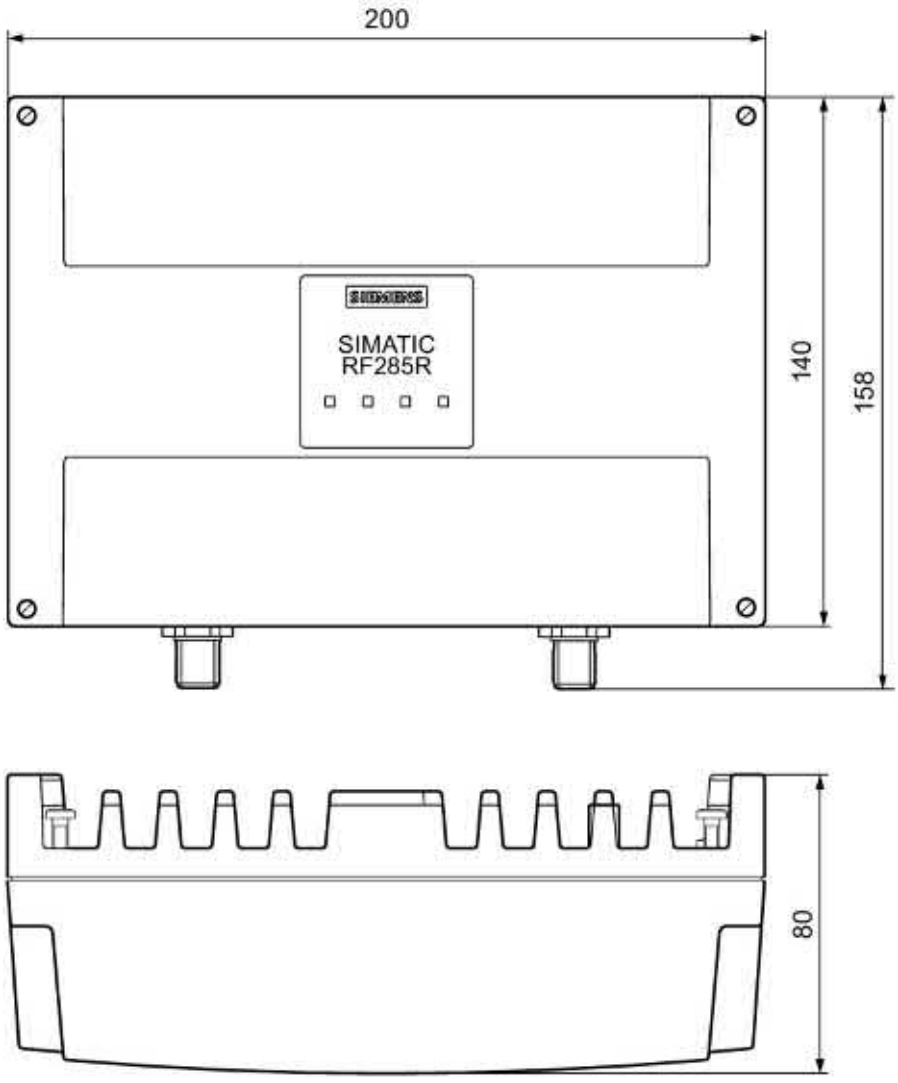

Figure 5-23 Dimension drawing RF285R (dimensions in mm)

5.9 SIMATIC RF290R

5.9.1 Features

SIMATIC RF290R	Characteristics	
	Design	① RS422/RS232 interface, 24 V power supply ② Digital input/output, M12 ③ Antenna connection, TNC ④ Operating display, 4 LEDs: • Power (PWR) • Active (ACT) • Present (PRE) • Error (ERR)
	Field of application	Identification tasks in production control and in intralogistics, e.g. skid identification, container management, HF gates (F&B) When connected via a PC, multitag operation is possible.

Note

Reader requires external antennas

Note that the RF290R reader is designed for operation with external antennas and can only be operated in conjunction with the antennas ANT D1, D5, D6 or D10.

Note

Note on operating the reader with ANT D6 / D10

When operating with a power ≥ 3 W, the limits are adhered to according to 2004/40/EC (minimum requirements concerning the protection of workers). Note that the antennas may only be used in an "industrial environment" and not in buildings used by the public.

5.9.2 Ordering data

Table 5- 21 Ordering data RF290R

	Article number
RF290R with RS-232 interface for PC mode and RS-422 interface for CM mode	6GT2821-0AC12

Table 5- 22 Ordering data - accessories - RF290R

		Article number
24 V connecting cable	5 m	6GT2491-1HH50
RS-232 connecting cable, with 4-pin M12 connector for 24 V for connection to the wide-range power supply unit	5 m	6GT2891-4KH50
RS-232 connecting cable with open cable ends for 24 V	5 m	6GT2891-4KH50-0AX0
Adapter for mounting on a DIN rail (pack of 3)		6GK5798-8ML00-0AB3
Wide-range power supply unit for SIMATIC RF systems (100 - 240 VAC / 24 VDC / 3 A) with country-specific power cable/plug, 2 m		EU: 6GT2898-0AC00 UK: 6GT2898-0AC10 US: 6GT2898-0AC20
Connecting cables		
Reader ↔ ASM 475	2 m	6GT2891-4EH20
	5 m	6GT2891-4EH50
Connecting / extension cable		
Reader ↔ CM/ASM for RF200 / RF300 / RF600 / MV400 or extension cable MOBY U/D	2 m	6GT2891-4FH20
	5 m	6GT2891-4FH50
	10 m	6GT2891-4FN10
	20 m	6GT2891-4FN20
	50 m	6GT2891-4FN50
Antennas		
Antenna ANT D5		6GT2698-5AA10
Antenna ANT D6		6GT2698-5AB00
Covering hood for ANT D6		6GT2690-0AD00
Antenna ANT D10		6GT2698-5AF00
Accessories for connecting multiple antennas to SIMATIC RF290R		
Antenna multiplexer incl. one antenna connecting cable 0.4 m		6GT2894-0EA00
Antenna splitter incl. one antenna connecting cable 3.3 m		6GT2690-0AC00
Antenna cables		
Antenna cable	3.3 m	6GT2691-0CH33
	10.5 m	6GT2691-0CN10
Antenna cable extension	7.2 m	6GT2691-0DH72

5.9.3 Pin assignment

RS422/RS232

Table 5- 23 Pin assignment of the RS-422/RS 232 interface

Pin	Pin Device end 8-pin M12	Pin assignment	
		RS-422	RS-232
	1	+24 V	+24 V
	2	- Transmit	RXD
	3	0 V	0 V
	4	+ Transmit	TXD
	5	+ Receive	not used
	6	- Receive	not used
	7	not used	0 V
	8	Ground (shield)	Ground (shield)

Digital input/output

Note that the digital input/output can only be used in PC mode (RS-232).

Table 5- 24 Pin assignment of the DI/DO interface

Pin	Pin Device side, 4-pin, M12	Socket assignment
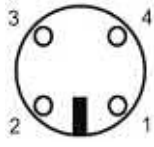	1	DO - relay contact COM (Common)
	2	DO - relay contact NO (Normaly Open, NO contact)
	3	DI - switched input, +24 V
	4	DI - ground, 0 V

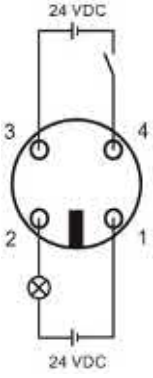

Figure 5-24 Pin assignment of the power supply connector

Digital input (DI):

The opto-coupler input is electrically isolated from the reader electronics. The external 24 V must be connected to the DI according to the circuit diagram. Make sure that the polarity of the 24 V is correct. The voltage is limited to < 10 mA by the integrated resistor.

NOTICE
Reader may be damaged If you exceed the maximum permitted supply voltage, the reader may be damaged. Make sure that the input voltage does not exceed the maximum permitted supply voltage of the reader.

Digital output (DO):

At the relay output, a NO contact is available. The output is electrically isolated from the reader electronics and therefore needs to be supplied externally.

NOTICE
Reader may be damaged If you exceed the maximum permitted voltage of 24 V / 1 A at the relay output, the reader may be damaged. Make sure that the voltage does not exceed 24 V. The output is intended only for switching resistive loads. If it is used to switch inductive loads, the reader may be damaged. Make sure that if inductive loads occur, the relay contacts are protected by an external suppressor circuit.

5.9.4 LED operating display

The operational statuses of the reader are displayed by the LEDs. The LED can adopt the colors green, red or yellow and the statuses off, on, flashing:

Table 5- 25 LED operating display on the reader

Labeling	LED	Meaning
PWR		The reader is turned off.
PWR		CM mode: Operating voltage present, reader not initialized or antenna switched off
		CM mode: Operating voltage present, reader initialized and antenna switched on PC mode: Supply voltage is on
ACT		Communication on the data line
PRE		• Operating mode "with presence": Transponder present • Operating mode "without presence": Transponder present and command currently being executed
ERR		CM mode: There is an error. The number of flashes provides information about the current error. You can find more information on error messages in the section "Error codes of the RF200 readers (Page 409)". The optical error display is only reset if the corresponding reset parameter ("option_1 = 2") is set (see Product Information " Product information "SIMATIC RF200 command set" (https://support.industry.siemens.com/cs/ww/en/view/44864850)").
		PC mode: Error when connecting the antenna or the interference level in the antenna environment is too high

5.9.5 Installing the RF290R reader

5.9.5.1 Wall mounting

Use the holes in the housing to screw the device to the wall or onto a horizontal surface. The position of the drill holes is shown in the following figure:

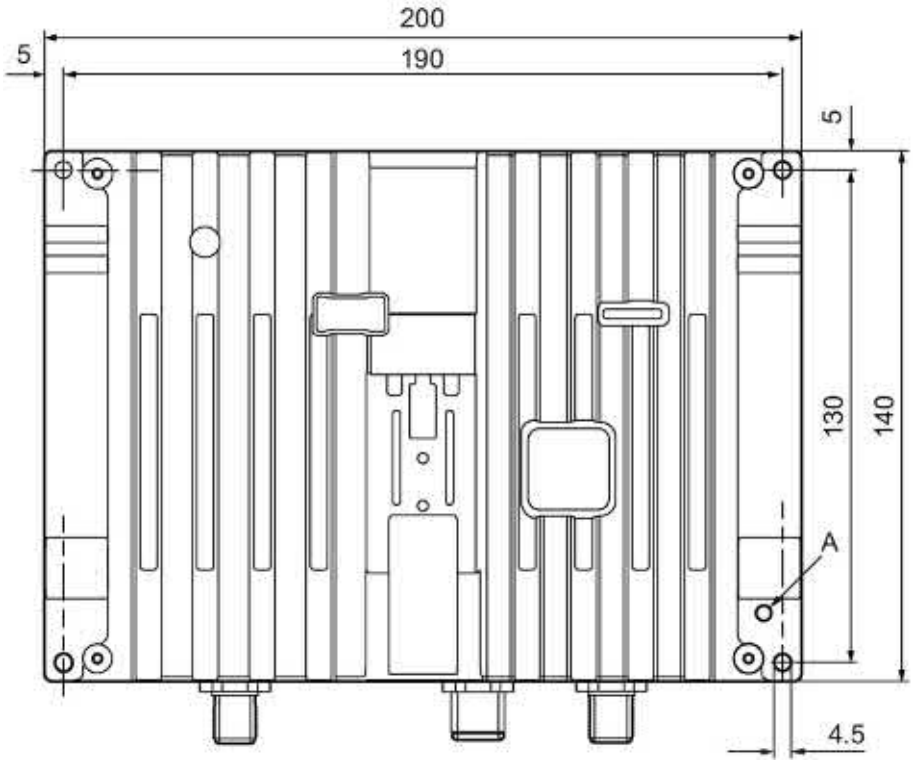

Figure 5-25 Drilling pattern for the RF290R (dimensions in mm)

A: M4 threaded socket for potential connection of the reader. You will find further information on the potential connection in the section "Further information (Page 120)".

5.9.5.2 Installing on the S7-300 standard rail

Follow the steps below to mount the RF290R reader on a vertical S7-300 standard rail:

1. Place the device on the upper edge of the S7-300 standard rail (position A).
2. Screw the device to the mounting rail (position B).

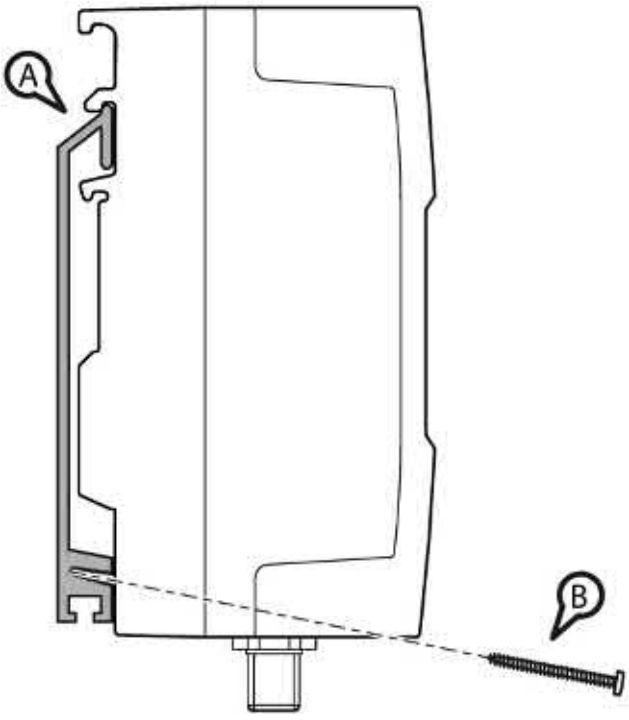

Figure 5-26 Installing the RF290R reader on the S7-300 standard rail

5.9.5.3 Installation on a DIN rail

The RF290R reader is suitable for installation on 35 mm rails that comply with DIN EN 50022.

Note

The adapter for mounting on a DIN rail does not ship with the RF290R

The adapter for mounting on a DIN rail does not ship with the product. You can obtain a pack of three with the following article number: 6GK5798-8ML00-0AB3.

The mounting fittings consist of the following parts:

- 1 DIN rail slider
- 1 spring
- 2 screws

Fit the adapter to the rear of the device as shown in the following figure:

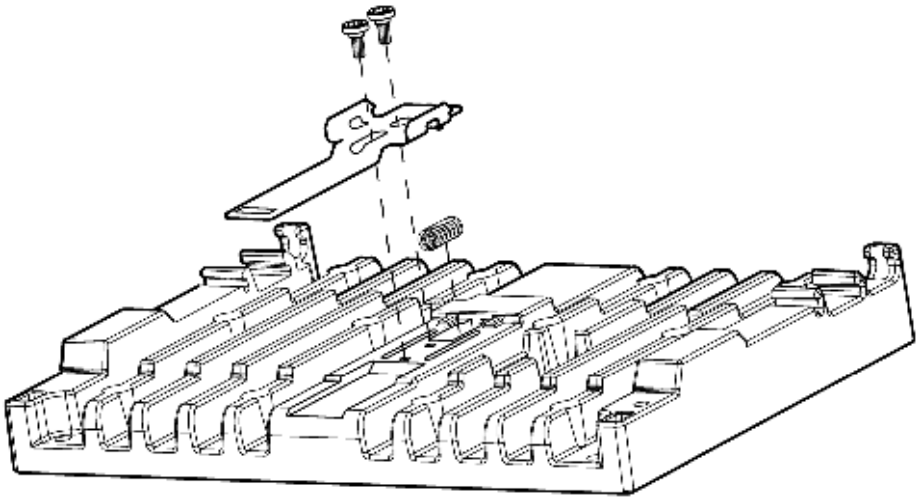

Figure 5-27 Mounting the DIN rail adapter

Follow the steps below to mount the RF290R reader on a DIN rail:

1. Place the device on the upper edge of the DIN rail (position A).
2. Pull the spring-mounted DIN rail slider (position B) down and press the device against the DIN rail until it locks in place.

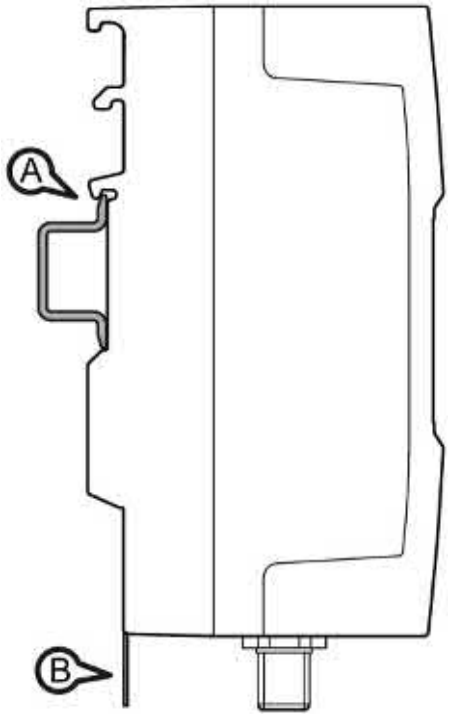

Figure 5-28 Mounting the RF290R reader on a DIN rail

5.9.6 Technical specifications

Table 5- 26 Technical specifications of the RF290R reader

	6GT2821-0AC12
Product type designation	SIMATIC RF290R
Radio frequencies	
Operating frequency, rated value	13.56 MHz
Electrical data	
Maximum range	650 mm
Maximum data transmission speed Reader ↔ transponder	ISO transponder
• Read	• Approx. 1500 bytes/s
• Write	• Approx. 1500 bytes/s
Typical transmission time for user data per byte	
• for write access	• 0.6 ms
• for read access	• 0.6 ms
Multitag capability	When connected via a PC
Transmission speed	19.2, 57.6, 115.2 kBd
Read/write distances of the reader	See section "Field data (Page 39)"
MTBF (Mean Time Between Failures)	18 years
Interfaces	
Electrical connector design	M12, 8-pin
Standard for interfaces for communication	• RS-422 • RS232
Antenna	external ANT D1, D5, D6 or D10 can be connected
Antenna connection	TNC socket
Mechanical specifications	
Housing	
• Material	• Aluminum die-casting
• Color	• Silver/anthracite
Recommended distance to metal	0 mm
Supply voltage, current consumption, power loss	
Supply voltage	24 V DC (± 10%)
Typical current consumption	400 mA (at 24 V and 5 W)

	6GT2821-0AC12
Permitted ambient conditions	
Ambient temperature	
• During operation	• -20 … +55 °C
• During transportation and storage	• -25 … +85 °C
Degree of protection according to EN 60529	IP65
Shock-resistant acc. to EN 60721-3-7, Class 7 M2	300 m/s²
Vibration-resistant acc. to EN 60721-3-7, Class 7 M2	20 m/s²

Design, dimensions and weight	
Dimensions (W x H x D)	200 × 80 × 140 mm
Weight	1.8 kg
Type of mounting	2 x M5 screw 1.5 Nm
Cable length, maximum	• RS-422: max. 1000 m • RS232: max. 30 m
LED display design	4 LEDs

5.9.7 Approvals

FCC information

Siemens SIMATIC RF290R (MLFB 6GT2821-0AC12) FCC ID NXW-RF290R

This device complies with part 15 of the FCC rules. Operation is subject to the following two conditions:

(1) This device may not cause harmful interference, and

(2) this device must accept any interference received, including interference that may cause undesired operation.

Caution

Any changes or modifications not expressly approved by the party responsible for compliance could void the user's authority to operate the equipment.

Note

This equipment has been tested and found to comply with the limits for a Class A digital device, pursuant to part 15 of the FCC Rules.

These limits are designed to provide reasonable protection against harmful interference when the equipment is operated in a commercial environment. This equipment generates, uses, and can radiate radio frequency energy and, if not installed and used in accordance with the instruction manual, may cause harmful interference to radio communications. Operation of this equipment in a residential area is likely to cause harmful interference in which case the user will be required to correct the interference at his own expense.

IC information

This device complies with Industry Canada licence-exempt RSS standard(s). Operation is subject to the following two conditions:

(1) This device may not cause interference, and

(2) this device must accept any interference, including interference that may cause undesired operation of the device.

Le présent appareil est conforme aux CNR d`Industrie Canada applicables aux appareils radio exempts de licence. L`exploitation est autorisée aux deux conditions suivantes :

(1) L`appareil ne doit pas produire de brouillage, et

(2) l'utilisateur de l`appareil doit accepter tout brouillage radioélectrique subi, même si le brouillage est susceptible d`en compromettre le fonctionnement.

If the antenna is detachable, require the following two conditions:

(1) To reduce potential radio interference to other users, the antenna type should be chosen that the radiated power is not more than that permitted for successful communication.

(2) This device has been designed to operate with the antennas listed below. Antennas not included in this list are strictly prohibited for use with this device. The required antenna impedance is 50 Ω.

Si l'antenne est amovible, demandez les deux conditions suivantes :

(1) Afin de réduire le risque d'interférence aux autres utilisateurs, il faut choisir le type d'antenne et son gain de façon à ce que la puissance rayonnée ne soit pas supérieure au niveau requis pour l'obtention d'une communication satisfaisante.

(2) Ce dispositif a été conçu pour fonctionner avec les antennes énumérées ci-dessous. Les antennes non incluses dans cette liste sont strictement interdites pour l'exploitation de ce dispositif. L'impéance d'antenne requise est 50 Ω.

5.9.8 Note on the use of the RF290R as a replacement for SLG D10 / SLG D10S

The RF290R reader is the successor to the MOBY D readers SLG D10 / SLG D10S rounding off the RF200 family; it is operated with external antennas. The following features distinguish the RF290R from the SLG models:

Table 5- 27 Differences between the RF290R readers and SLG D10 / SLG D10S

Properties SLG D10/SLG D10S	Properties RF290R
Two devices with different interfaces	RS-232/RS-422 interface and PC/CM functionality in one device
M 12, 4-pin male connector for the power supply 9-pin D-sub male connector for connection to the various communications modules	M12, 8-pin male connector for the power supply and for direct connection to the various communications modules [1]
no digital I/O	M12, 4-pin female connector for digital I/O (can only be used in PC mode)
no operating display via LEDs	operating display by four LEDs
Maximum transmit power of 10 W	Maximum transmit power of 5 W
One securing option	Different securing options
Standard protocol in ISO host mode (in PC mode)	Advanced protocol in ISO host mode (in PC mode) [2]
Amplitude Shift Keying (ASK) and Frequency Shift Keying (FSK) modes possible	Amplitude Shift Keying (ASK) mode possible
Support of "ICode1" and "TagIt" and ISO 15693-compatible transponders	Support of ISO 15693-compatible transponders
The total memory for "repeat_command" is limited to 32 kB	The total memory for "repeat_command" is limited to 16 kB

[1] The RF290R reader connectors are compatible with the SLG D10 if a Y connecting cable is used (6GT2891-4KH50, 6GT2891-4KH50-0AX0).

[2] In ISO host mode (in PC mode), a program adaptation is necessary

5.9.9 Dimension drawing

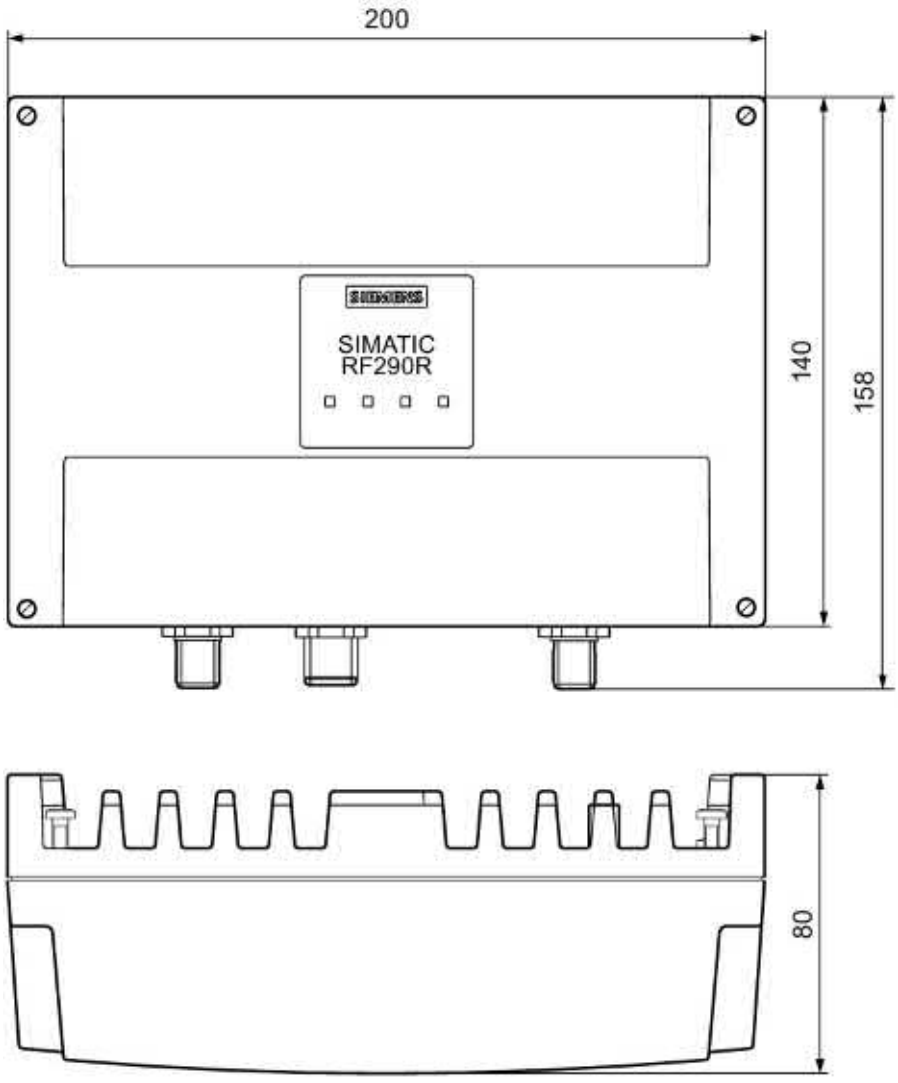

Figure 5-29 Dimensional drawing RF290R (dimensions in mm)

Antennas

6

Note

The RF250R, RF285R and RF290R readers require external antennas.

Note that the RF250R, RF285R and RF290R readers are designed for operation with external antennas.

The RF250R reader can only be used in conjunction with the antennas ANT 1, 3, 3S, 8, 12, 18 or 30. The RF285R reader can only be used in conjunction with the antennas ANT D1, D5 or D6. The RF290R reader can only be used in conjunction with the antennas ANT D1, D5, D6 or D10.

6.1 ANT 1

6.1.1 Characteristics

ANT 1	Characteristics	
	Area of application	Small assembly lines
	Read/write distance	up to 140 mm (depending on the transponder)
	Connecting cable	3 m (integrated antenna cable)
	Connectable readers	RF250R
	Degree of protection	IP67

6.1.2 Ordering data

Table 6- 1 Ordering data ANT 1

Antenna	Article number
ANT 1 (including one integrated antenna cable 3 m)	6GT2398-1CB00

6.1.3 Flush-mounted in metal

The tuning of the ANT 1 antenna is optimized for mounting in metal.

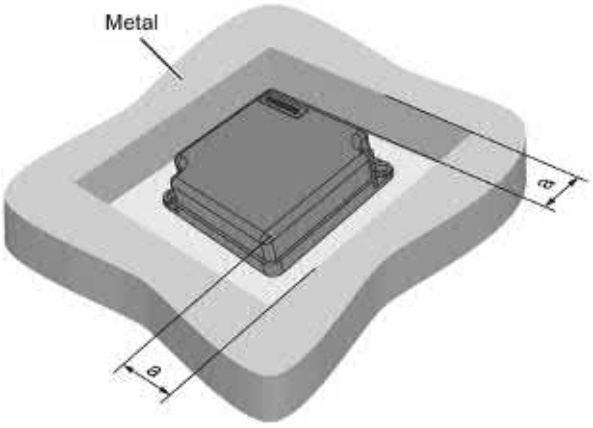

= 40 mm
a

Figure 6-1 ANT 1 flush-mounted in metal

6.1.4 Minimum clearances

Note

Extension of the data transmission time if distance values are undershot

If the distance values specified in the tables are undershot, it is possible that the inductive fields will be affected. In this case, the data transmission time can increase unpredictably or a command is aborted with an error.

For this reason, please observe the values in the tables.

Minimum distances from transponder to transponder (without multitag mode)

Table 6- 2 Minimum distances transponder edge to transponder edge

	MDS D423 / MDS D425 / MDS D525	MDS D126 / MDS D160 / MDS D165 / MDS D200 / MDS D339 / MDS D426 / MDS D428 / MDS D460 / MDS D560	MDS D100 / MDS D124 / MDS D139 / MDS D261 / MDS D400 / MDS D424
RF250R with ANT 1	≥ 120 mm	≥ 150 mm	≥ 240 mm

Minimum distances from antenna to antenna

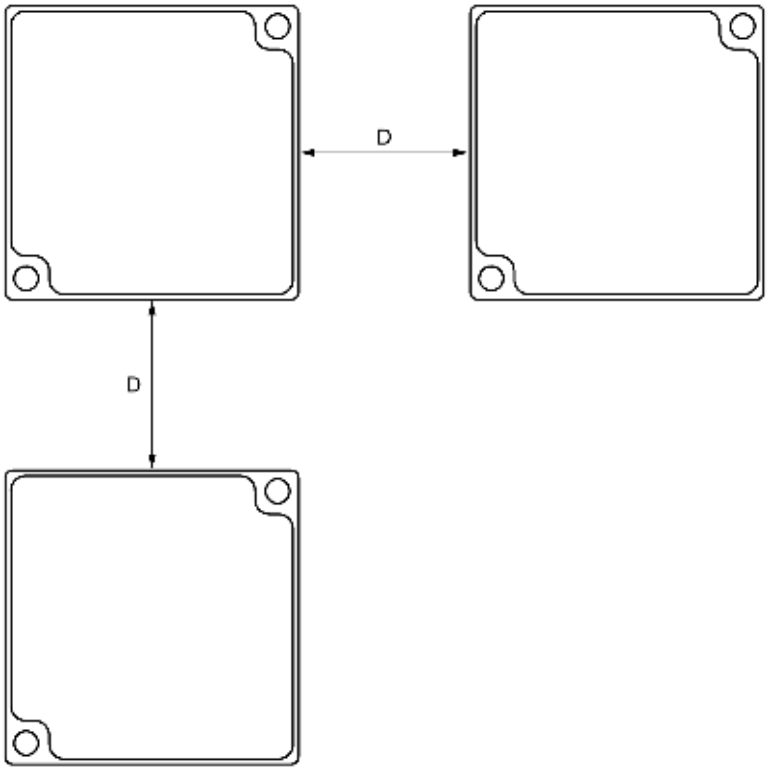

D ≥ 300 mm

Figure 6-2 Minimum distance ANT 1

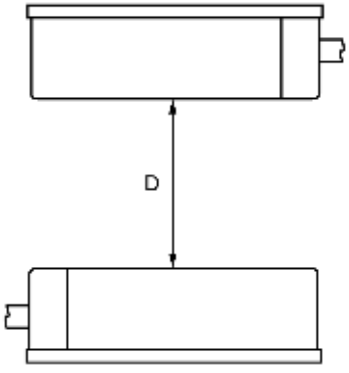

D ≥ 500 mm

Figure 6-3 Face-to-face minimum distance ANT 1

6.1.5 Technical specifications

	6GT2398-1CB00
Product type designation	ANT 1
Electrical data	
Maximum write/read distance ANT ↔ Transponder (S_g)	140 mm
Interfaces	
Plug connection	M8, 4-pin; pins on antenna side
Mechanical specifications	
Housing	
• Material	• Plastic PA 12
• Color	• Anthracite
MTBF	13698 years
Permitted ambient conditions	
Ambient temperature	
• During operation	• -25 ... +70 °C
• During transportation and storage	• -40 ... +85 °C
Degree of protection to EN 60529	IP67
Shock-resistant according to EN 60721-3-7 Class 7 M2 [1]	500 m/s²
Vibration-resistant according to EN 60721-3-7 Class 7 M2 [1]	200 m/s²
Design, dimensions and weight	
Dimensions (L × W × H)	75 x 75 x 20 mm
Weight	225 g
Type of mounting	2 x M5 screws
Cable length	3 m (plug-in antenna cable)

[1] Warning: The values for shock and vibration are maximum values and must not be applied continuously.

6.1.6 Dimension drawing

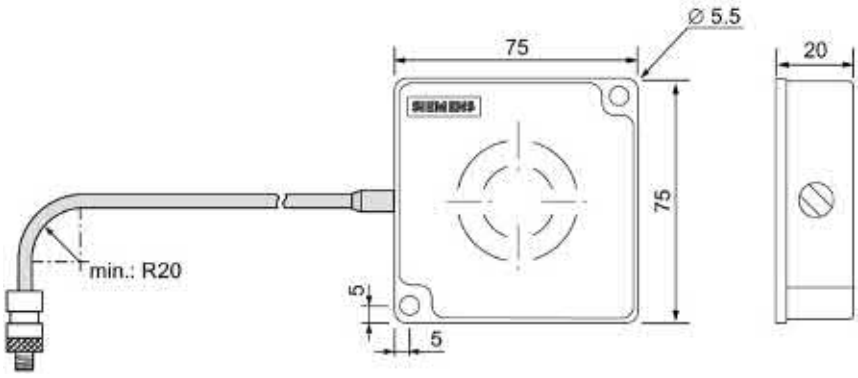

Figure 6-4 Dimensional drawing of ANT 1 (all values in mm)

6.2 ANT 3

6.2.1 Features

ANT 3	Characteristics	
	Area of application	Small assembly lines
	Writing/reading distance	up to 50 mm (depending on the transponder)
	Connecting cable	3 m (plug-in antenna cable)
	Connectable readers	RF250R
	Degree of protection	IP67

6.2.2 Ordering data

Table 6- 3 Ordering data ANT 3

Antenna	Article number
ANT 3 (without antenna cable)	6GT2398-1CD30-0AX0
ANT 3 (incl. one plug-in antenna cable 3 m)	6GT2398-1CD40-0AX0

Table 6- 4 Ordering data ANT 3 accessories

Accessories	Article number
Antenna connecting cable drag-capable, 3 m	6GT2391-0AH30

6.2.3 Mounting on/in metal

The tuning of the ANT 3 antenna is optimized for mounting on metal.

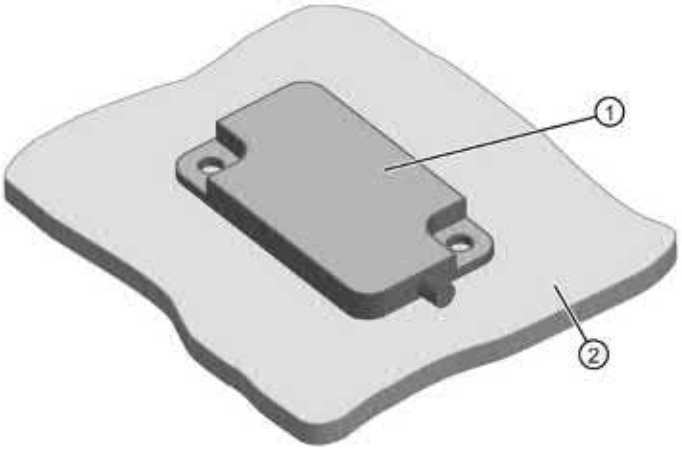

① ANT 3
② Metal

Figure 6-5 ANT 3 mounted on metal

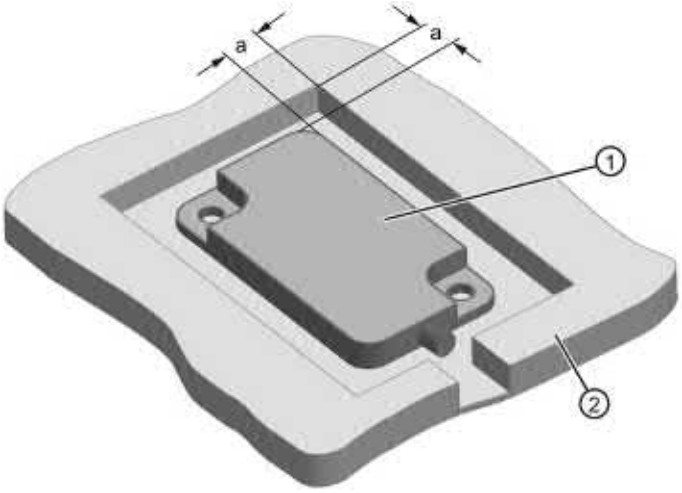

① ANT 3
② Metal
a = 10 mm

Figure 6-6 ANT 3 flush-mounted in metal

6.2.4 Minimum spacing

Note

Extension of the data transmission time if distance values are undershot

If the distance values specified in the tables are undershot, it is possible that the inductive fields will be affected. In this case, the data transmission time can increase unpredictably or a command is aborted with an error.

For this reason, please observe the values in the tables.

Minimum distances from transponder to transponder (without multitag mode)

Table 6- 5 Minimum distances transponder edge to transponder edge

	MDS D124 / MDS D160 / MDS D324 / MDS D423 / MDS D424 / MDS D428 / MDS D460 / MDS D524 / MDS D528 / MDS D560	MDS D422 / MDS D425 / MDS D522 / MDS D525
RF250R with ANT 3	> 80 mm	> 60 mm

Minimum distances from antenna to antenna

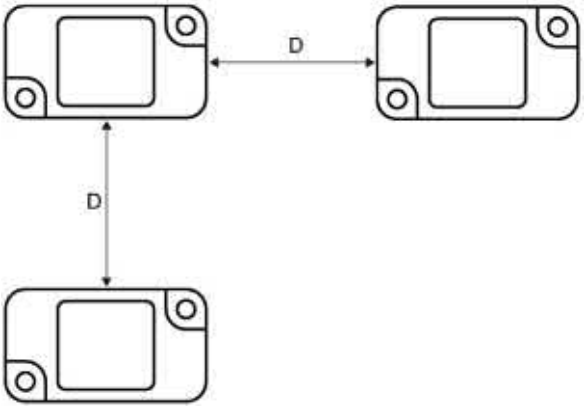

D ≥ 150 mm

Figure 6-7 Minimum distance for ANT 3

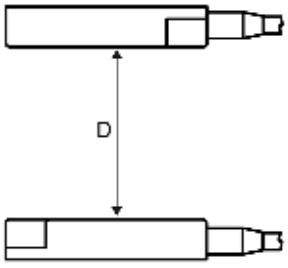

D ≥ 200 mm

Figure 6-8 Face-to-face distance between two ANT 3s

6.2.5 Technical data

		6GT2398-1CD30-0AX0 6GT2398-1CD40-0AX0
Product type designation	ANT 3	
Electrical data		
Maximum write/read distance ANT ↔ Transponder (S_g)	50 mm	
Interfaces		
Plug connection	M8, 4-pin socket on antenna side (with antenna connecting cable: pin cable end)	
Mechanical specifications		
Housing		
• Material	• Plastic PA6-V0	
• Color	• Black	
MTBF	13698 years	
Permitted ambient conditions		
Ambient temperature		
• During operation	• -25 ... +70 °C	
• During transportation and storage	• -40 ... +85 °C	
Degree of protection to EN 60529	IP67	
Shock-resistant according to EN 60721-3-7 Class 7 M2 1)	500 m/s²	
Vibration-resistant according to EN 60721-3-7 Class 7 M2 1)	200 m/s²	

	6GT2398-1CD30-0AX0 6GT2398-1CD40-0AX0
Design, dimensions and weight	
Dimensions (L × W × H)	
• Housing without antenna connector	• 50 × 28 × 10 mm
• Housing with antenna connector	• 240 × 28 × 10 mm
Weight	
• Housing with antenna connector	• Approx. 35 g
• Housing with antenna connector and antenna cable	• Approx. 160 g
Type of mounting	2 x M4 screws
Cable length	3 m (plug-in antenna cable)

1) Warning: The values for shock and vibration are maximum values and must not be applied continuously.

6.2.6 Dimension drawing

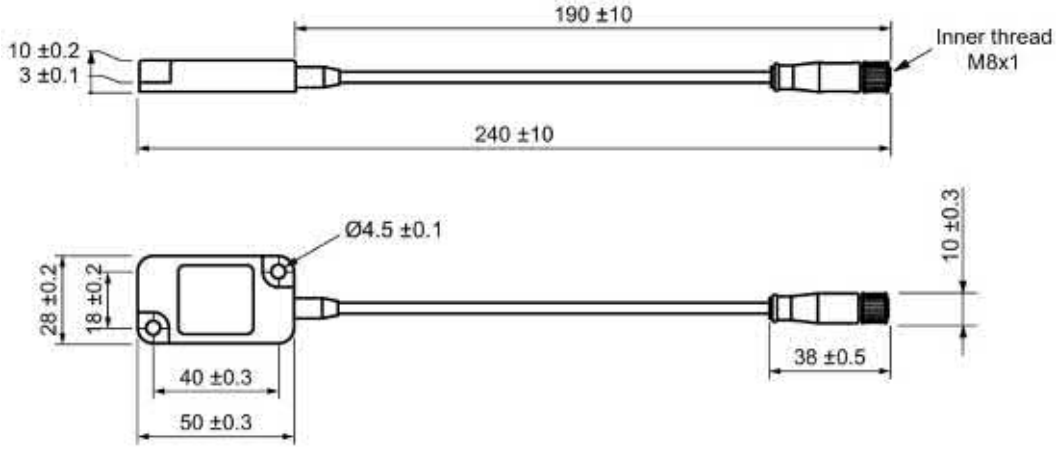

Figure 6-9 Dimension drawing ANT 3 (all values in mm)

6.3 ANT 3S

6.3.1 Features

ANT 3S	Characteristics	
	Area of application	Small assembly lines
	Writing/reading distance	up to 4 mm (depending on the transponder)
	Connecting cable	3 m (plug-in antenna cable)
	Connectable readers	RF250R
	Degree of protection	IP67

6.3.2 Ordering data

Table 6- 6 Ordering data ANT 3S

Antenna	Article number
ANT 3S (without antenna connecting cable)	6GT2398-1CD50-0AX0
ANT 3S (incl. one plug-in antenna connecting cable 3 m)	6GT2398-1CD60-0AX0

Table 6- 7 Ordering data ANT 3S accessories

Accessories	Article number
Antenna connecting cable drag-capable, 3 m	6GT2391-0AH30

6.3.3 Mounting on/in metal

The tuning of the ANT 3S antenna is optimized for mounting on metal.

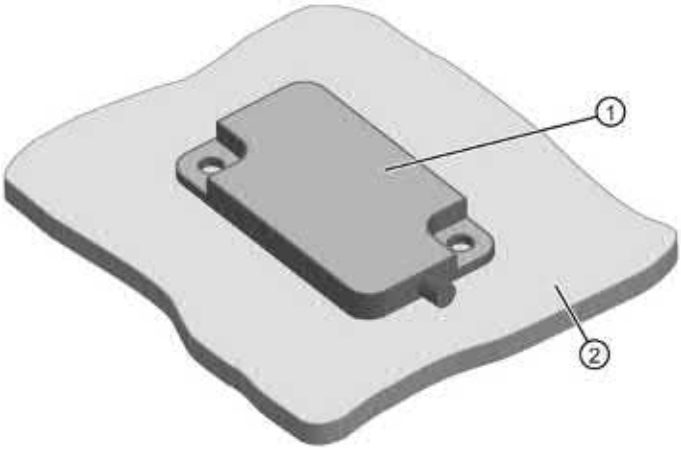

① ANT 3S
② Metal

Figure 6-10 ANT 3S mounted on metal

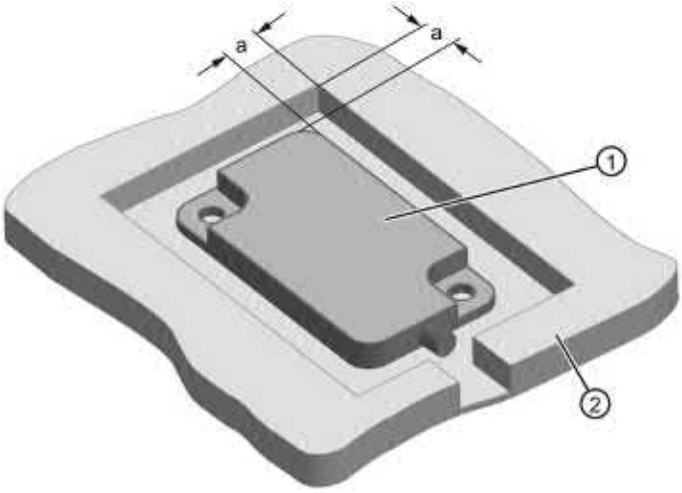

① ANT 3S
② Metal
a = 10 mm

Figure 6-11 ANT 3S flush-mounted in metal

6.3.4 Minimum spacing

Note

Extension of the data transmission time if distance values are undershot

If the distance values specified in the tables are undershot, it is possible that the inductive fields will be affected. In this case, the data transmission time can increase unpredictably or a command is aborted with an error.

For this reason, please observe the values in the tables.

Minimum distances from transponder to transponder (without multitag mode)

Table 6- 8 Minimum distances transponder edge to transponder edge

	MDS D117 / MDS D127 / MDS D421 / MDS D521
RF250R with ANT 3S	> 20 mm

Minimum distances from antenna to antenna

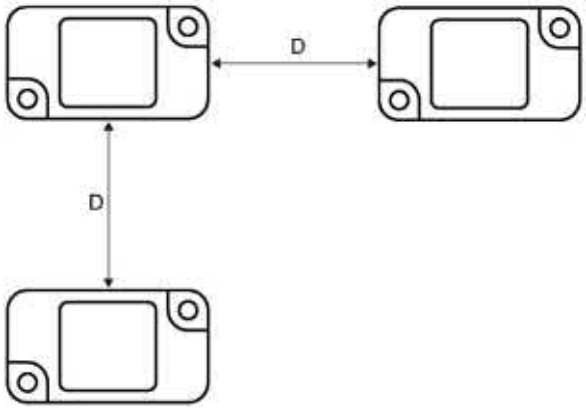

D ≥ 20 mm (with 2 antennas)
≥ 20 mm (with 3 antennas)

Figure 6-12 Minimum distance ANT 3S

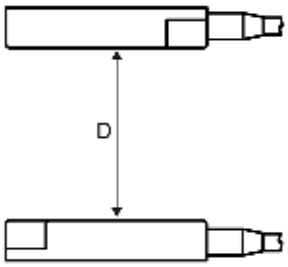

D ≥ 50 mm

Figure 6-13 Face-to-face minimum distance between two ANT 3S

6.3.5 Technical data

	6GT2398-1CD60-0AX0 6GT2398-1CD50-0AX0
Product type designation	ANT 3S
Electrical data	
Maximum write/read distance ANT ↔ transponder (Sg)	4 mm
Interfaces	
Plug connection	M8, 4-pin; socket on antenna side (with antenna connecting cable: pin cable end)
Mechanical specifications	
Housing	
• Material	• Plastic PA6-V0
• Color	• Black
MTBF	13698 years
Permitted ambient conditions	
Ambient temperature	
• During operation	• -25 ... +70 °C
• During transportation and storage	• -40 ... +85 °C
Degree of protection to EN 60529	IP67
Shock-resistant according to EN 60721-3-7 Class 7 M2 1)	50 m/s²
Vibration-resistant according to EN 60721-3-7 Class 7 M2 1)	200 m/s²

	6GT2398-1CD60-0AX0 6GT2398-1CD50-0AX0
Design, dimensions and weight	
Dimensions (L × W × H)	
• Housing without antenna connector	• 50 × 28 × 10 mm
• Housing with antenna connector	• 240 × 28 × 10 mm
Weight	
• Housing with antenna connector	• Approx. 35 g
• Housing with antenna connector and antenna cable	• Approx. 160 g
Type of mounting	2 x M4 screws
Cable length	3 m (plug-in antenna cable)

1) Warning: The values for shock and vibration are maximum values and must not be applied continuously.

6.3.6 Dimension drawing

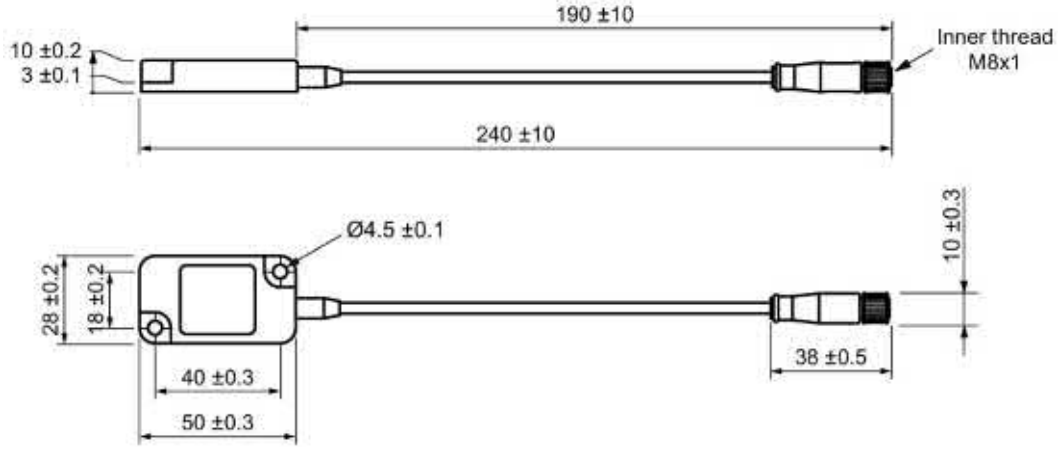

Figure 6-14 Dimension drawing ANT 3S (all values in mm)

6.4 ANT 8

6.4.1 Features

ANT 8	Characteristics	
	Area of application	Tool identification
	Writing/reading distance	up to 4 mm (depending on the transponder)
	Connecting cable	3 m
	Connectable readers	RF250R
	Degree of protection	IP67

6.4.2 Ordering data

Table 6- 9 Ordering data ANT 8

Antenna	Article number
ANT 8 (without antenna cable)	6GT2398-1CF00
ANT 8 (including one plug-in antenna cable 3 m)	6GT2398-1CF10

Table 6- 10 Ordering data ANT 8 accessories

Accessories	Article number
Antenna connecting cable drag-capable, 3 m	6GT2391-0AH30

6.4.3 Transmission window

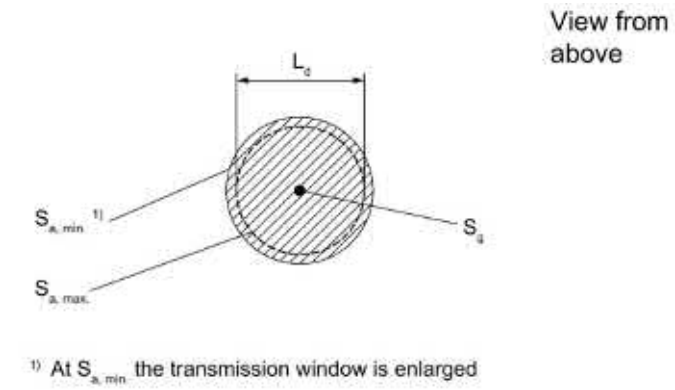

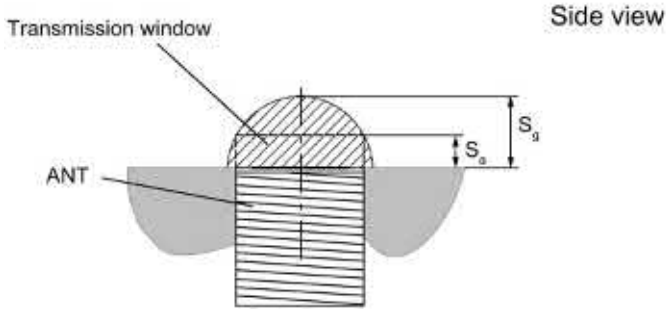

L_d Length of the transmission window (= 3 mm)

S_a Operating distance between antenna and transponder

S_g Limit distance (maximum clear distance between upper surface of the reader and the antenna, at which the transmission can still function under normal conditions)

Figure 6-15 Transmission window ANT 8

6.4.4 Flush-mounted in metal

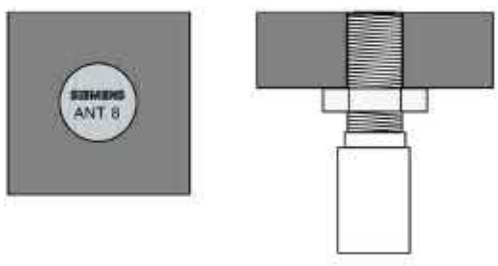

Figure 6-16 ANT 8 flush-mounted in metal

6.4.5 Minimum spacing

Note

Extension of the data transmission time if distance values are undershot

If the distance values specified in the tables are undershot, it is possible that the inductive fields will be affected. In this case, the data transmission time can increase unpredictably or a command is aborted with an error.

For this reason, please observe the values in the tables.

Minimum distances from transponder to transponder (without multitag mode)

Table 6- 11 Minimum distances transponder edge to transponder edge

	MDS D117 / MDS D127	MDS D421 / MDS D521
RF250R with ANT 8	≥ 20 mm	≥ 30 mm

Definition of distance D

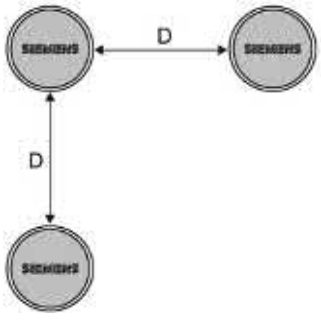

D ≥ 50 mm

Figure 6-17 Minimum distance for ANT 8

D ≥ 50 mm

Figure 6-18 Face-to-face distance between two ANT 8s

6.4.6 Technical data

		6GT2398-1CF10 6GT2398-1CF00
Product type designation	ANT 8	
Electrical data		
Maximum write/read distance ANT ↔ transponder (S_g)	4 mm	
Interfaces		
Plug connection	4-pin, pin on antenna side	
Mechanical specifications		
Housing		
• Material	• Stainless steel V2A	
• Color	• silver	

	6GT2398-1CF10 6GT2398-1CF00
Permitted ambient conditions	
Ambient temperature	
• During operation	• -25 ... +70 °C
• During transportation and storage	• -40 ... +85 °C
Degree of protection to EN 60529	IP67
Shock-resistant according to EN 60721-3-7 Class 7 M2 [1]	500 m/s²
Vibration-resistant according to EN 60721-3-7 Class 7 M2 [1]	200 m/s²

Design, dimensions and weight	
Dimensions (∅ x thread x L)	M8 x 1 x 38 mm
Weight	10 g without cable 140 g with cable
Type of mounting	2x stainless steel nuts M8 x 1
Cable length	3 m

[1] Warning: The values for shock and vibration are maximum values and must not be applied continuously.

6.4.7 Dimension drawing

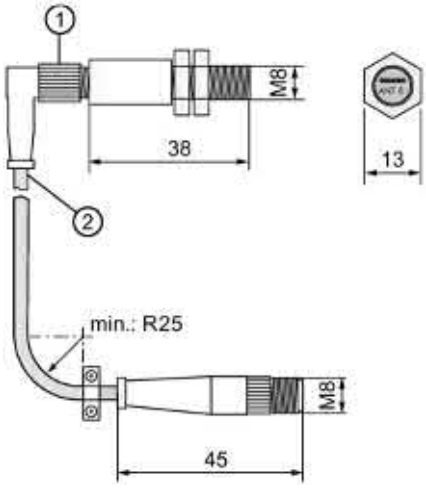

① The antenna connector may only be tightened by hand.

② The cable must be secured in front of/behind the support sleeve so that no bending strain can be transferred to the antenna connector.

Figure 6-19 Dimension drawing ANT 8 (all values in mm)

6.5 ANT 12

6.5.1 Features

ANT 12	Characteristics	
	Area of application	Tool identification
	Writing/reading distance	up to 16 mm (depending on the transponder)
	Connecting cable	3 m or 0.6 m
	Connectable readers	RF250R
	Degree of protection	IP67 (front)

6.5.2 Ordering data

Table 6- 12 Ordering data ANT 12

Antenna	Article number
ANT 12 (incl. one integrated antenna connecting cable 0.6 m)	6GT2398-1CC10
ANT 12 (incl. one integrated, antenna connecting cable suitable for cable carriers 3 m)	6GT2398-1CC00

6.5.3 Transmission window

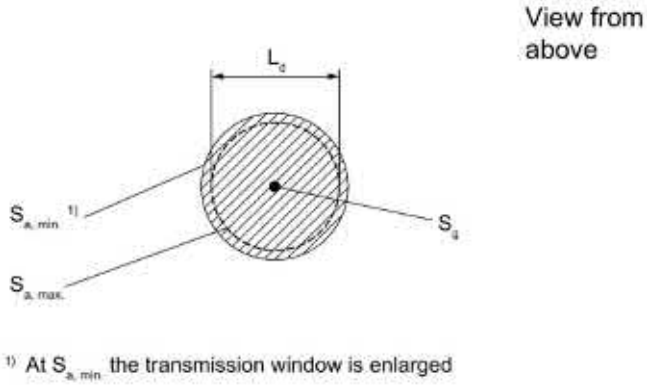

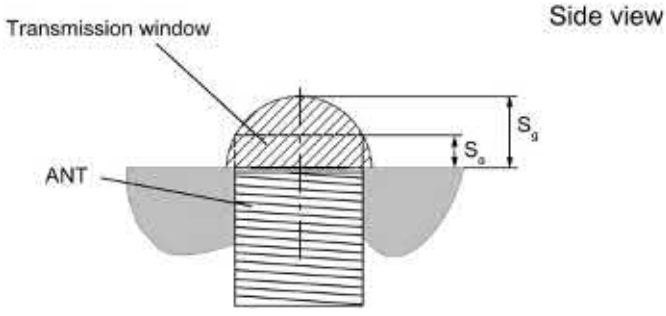

L_d Length of the transmission window (= 20 mm)

S_a Operating distance between antenna and transponder

S_g Limit distance (maximum clear distance between upper surface of the reader and the antenna, at which the transmission can still function under normal conditions)

Figure 6-20 Transmission window ANT 12

6.5.4 Flush-mounted in metal

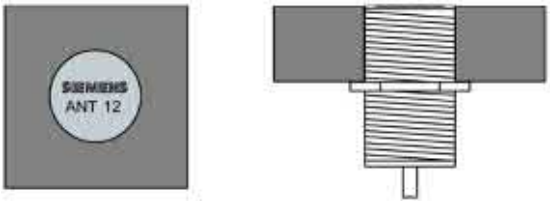

Figure 6-21 ANT 12 flush-mounted in metal

6.5.5 Minimum spacing

Note

Extension of the data transmission time if distance values are undershot

If the distance values specified in the tables are undershot, it is possible that the inductive fields will be affected. In this case, the data transmission time can increase unpredictably or a command is aborted with an error.

For this reason, please observe the values in the tables.

Minimum distances from transponder to transponder (without multitag mode)

Table 6- 13 Minimum distances transponder edge to transponder edge

	MDS D117 / MDS D127	MDS D421 / MDS D422 / MDS D428 / MDS D460 / MDS D522 / MDS D528 / MDS D560
RF250R with ANT 12	≥ 60 mm	≥ 80 mm

Definition of distance D

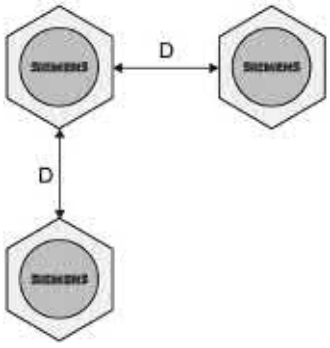

D ≥ 70 mm

Figure 6-22 Minimum distance for ANT 12

D ≥ 100 mm

Figure 6-23 Face-to-face distance between two ANT 12s

6.5.6 Technical data

		6GT2398-1CC00 6GT2398-1CC10
Product type designation	ANT 12	
Electrical data		
Maximum write/read distance ANT ↔ transponder (S_g)	16 mm	
Interfaces		
Plug connection	4-pin, pin on antenna side	
Mechanical specifications		
Housing		
• Material	• Plastic Crastin	
• Color	• Pale turquoise	

	6GT2398-1CC00 6GT2398-1CC10
Permitted ambient conditions	
Ambient temperature	
• During operation	• -20 ... +70 °C
• During transportation and storage	• -40 ... +85 °C
Degree of protection to EN 60529	IP67 (front)
Shock-resistant according to EN 60721-3-7 Class 7 M2 [1]	500 m/s^2
Vibration-resistant according to EN 60721-3-7 Class 7 M2 [1]	200 m/s^2

Design, dimensions and weight	
Dimensions (∅ x thread x L)	M12 x 1 x 40 mm
Weight	145 g
Type of mounting	2x plastic nuts M12 x 1
Cable length	3 m or 0.6 m

[1] Warning: The values for shock and vibration are maximum values and must not be applied continuously.

6.5.7 Dimension drawing

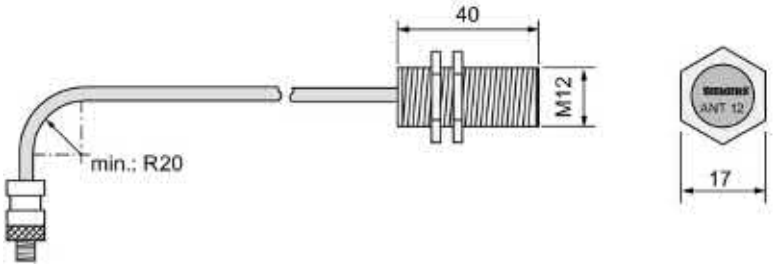

Figure 6-24 Dimension drawing ANT 12 (all values in mm)

6.6 ANT 12 (stainless steel variant)

6.6.1 Features

ANT 12 (stainless steel variant)	Characteristics	
	Area of application	Tool identification
	Writing/reading distance	Up to 16 mm (depending on the transponder)
	Connecting cable	Plug-in 3 m
	Connectable readers	RF250R
	Degree of protection	IP67 with inserted cable

6.6.2 Ordering data

Table 6- 14 Ordering data for ANT 12 (stainless steel variant)

Antenna	Article number
ANT 12 (without antenna cable)	6GT2398-1DC00
ANT 12 (including one plug-in antenna cable 3 m)	6GT2398-1DC10

Table 6- 15 Ordering data ANT 12 accessories

Accessories	Article number
Antenna connecting cable drag-capable, 3 m	6GT2391-0AH30

6.6.3 Antenna connection

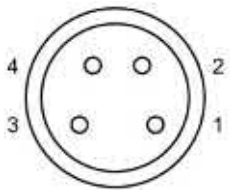

Pins 1 and 3	GND
Pins 2 and 4	Signal

CAUTION

Minimum requirements for the antenna connecting cable

We recommend that you use the antenna connecting cable "6GT2391-0AH30" from Siemens.

Pay attention to the following minimum requirements if you want to configure an antenna cable yourself:

- Temperature: 80 °C
- Conductor cross-section: AWG21

CAUTION

Check connections

The device could be damaged as a result of missing power supply. Therefore, check all connections prior to commissioning.

6.6.4 Transmission window

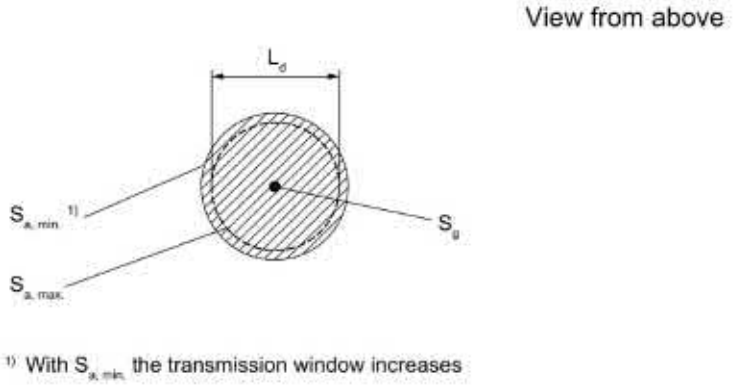

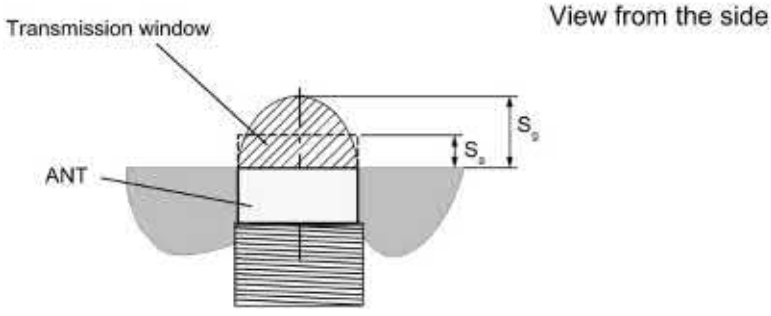

L_d Length of the transmission window (= 20 mm)

S_a Operating distance between antenna and transponder

S_g Limit distance (maximum clear distance between upper surface of the reader and the antenna, at which the transmission can still function under normal conditions)

Figure 6-25 Transmission window ANT 12 (stainless steel variant)

6.6.5 Flush-mounted in metal

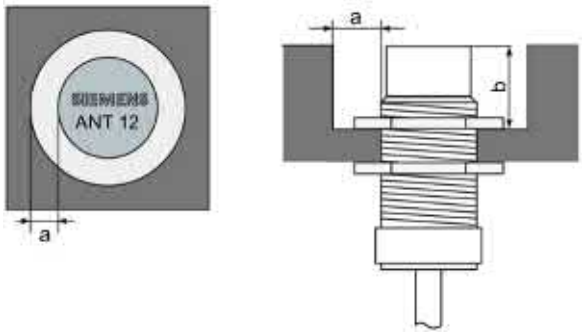

a = 10 mm
b = 10 mm

Figure 6-26 ANT 12 (stainless steel variant) flush-mounted in metal

6.6.6 Minimum spacing

Note

Extension of the data transmission time if distance values are undershot

If the distance values specified in the tables are undershot, it is possible that the inductive fields will be affected. In this case, the data transmission time can increase unpredictably or a command is aborted with an error.

For this reason, please observe the values in the tables.

Minimum distances from transponder to transponder (without multitag mode)

Table 6- 16 Minimum distances transponder edge to transponder edge

	MDS D117 / MDS D127	MDS D421 / MDS D422 / MDS D428 / MDS D460 / MDS D522 / MDS D528 / MDS D560
RF250R with ANT 12 (stainless steel variant)	≥ 60 mm	≥ 80 mm

Definition of distance D

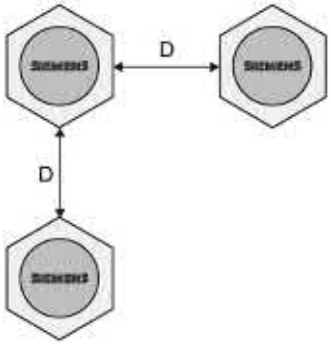

D ≥ 70 mm

Figure 6-27 Minimum distance ANT 12 (stainless steel variant)

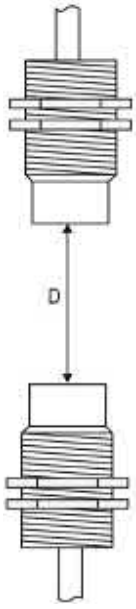

D ≥ 100 mm

Figure 6-28 Face-to-face minimum distance between two ANT 12 (stainless steel variant)

6.6.7 Technical data

	6GT2398-1DC00 [1] 6GT2398-1DC10
Product type designation	ANT 12 (stainless steel variant)
Electrical data	
Input voltage of the antenna [2]	max. 5 V AC (13.56 MHz)
Input current of the antenna [2]	max. 85 mA AC (13.56 MHz)
Maximum write/read distance ANT ↔ transponder (S_g)	16 mm
Interfaces	
Plug connection	4-pin, socket
Mechanical specifications	
Enclosure	
• Material	• Stainless steel V2A / Pocan
• Color	• Silver/pastel turquoise
Permitted ambient conditions	
Ambient temperature	
• During operation	• -20 ... +70 °C
• During transportation and storage	• -40 ... +85 °C
Ambient conditions regarding UL approval	• for indoor use only (dry location) • Degree of pollution 2 • Altitude < 2000 m • Overvoltage category 2 • Air humidity < 90 %
Degree of protection according to EN 60529	IP67 with inserted cable (IP-Rating is not investigated by UL)
Shock-resistant according to EN 60721-3-7 Class 7 M2 [3]	500 m/s^2
Vibration-resistant according to EN 60721-3-7 Class 7 M2 [3]	200 m/s^2

	6GT2398-1DC00 [1] 6GT2398-1DC10
Design, dimensions and weight	
Dimensions (∅ x L)	12 x 40 mm
Thread (∅ x thread x L)	M12 x 1 x 30 mm
Weight without cable/with cable	15 g / 180 g
Type of mounting	2x stainless steel nuts M12 x 1

1) Investigated by UL
The products 6GT2398-1DC10 and 6GT2398-1DC00 are identical in structure and only differ in the antenna connecting cable included in the scope of delivery.

2) The supply source and ext. circuits intended to be connected to this device shall be galv. separated from mains supply or hazardous live voltage by reinforced or double insulation and meet the requirements of SELV/PELV circuit of UL/IEC61010-2-201 and clause 9.4 Limited energy circuit of UL/IEC 61010-1 or Class 2 of NEC or LPS of UL/IEC 60950".

3) Warning: The values for shock and vibration are maximum values and must not be applied continuously.

6.6.8 Dimension drawing

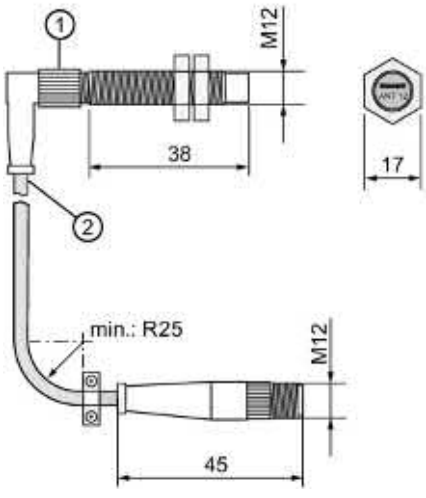

① The antenna connector may only be tightened by hand.

② The cable must be secured in front of/behind the support sleeve so that no bending strain can be transferred to the antenna connector.

Figure 6-29 Dimension drawing ANT 12 (stainless steel variant)

All dimensions in mm.

6.7 ANT 18

6.7.1 Features

ANT 18	Characteristics	
	Area of application	Small assembly lines
	Writing/reading distance	up to 35 mm (depending on the transponder)
	Connecting cable	3 m or 0.6 m
	Connectable readers	RF250R
	Degree of protection	IP67 (front)

6.7.2 Ordering data

Table 6- 17 Ordering data ANT 18

Antenna	Article number
ANT 18 (incl. one integrated antenna connecting cable 0.6 m)	6GT2398-1CA10
ANT 18 (including one integrated antenna connecting cable 3 m)	6GT2398-1CA00

6.7.3 Transmission window

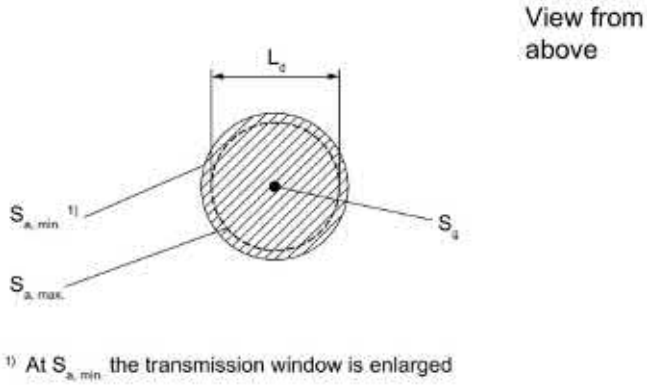

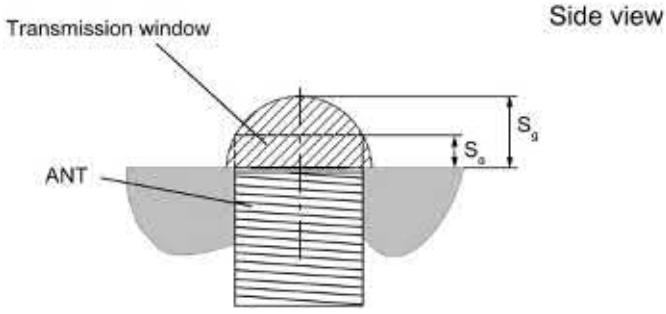

L_d Length of the transmission window (= 30 mm)

S_a Operating distance between antenna and transponder

S_g Limit distance (maximum clear distance between upper surface of the reader and the antenna, at which the transmission can still function under normal conditions)

Figure 6-30 Transmission window ANT 18

6.7.4 Flush-mounted in metal

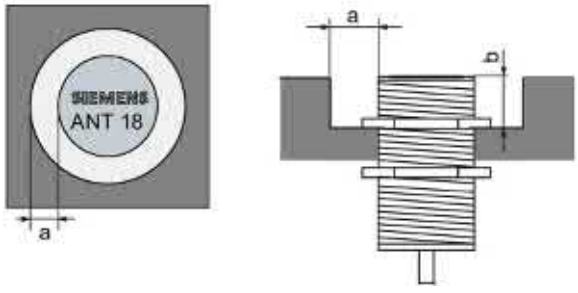

a = 10 mm

b = 10 mm

Figure 6-31 ANT 18 flush-mounted in metal

6.7.5 Minimum spacing

Note

Extension of the data transmission time if distance values are undershot

If the distance values specified in the tables are undershot, it is possible that the inductive fields will be affected. In this case, the data transmission time can increase unpredictably or a command is aborted with an error.

For this reason, please observe the values in the tables.

Minimum distances from transponder to transponder (without multitag mode)

Table 6- 18 Minimum distances transponder edge to transponder edge

	MDS D124 / MDS D160 / MDS D324	MDS D421 / MDS D422 / MDS D423 / MDS D424 / MDS D425 / MDS D428 / MDS D460 / MDS D522 / MDS D524 / MDS D528 / MDS D525 / MDS D560
RF250R with ANT 18	≥ 80 mm	≥ 100 mm

Definition of distance D

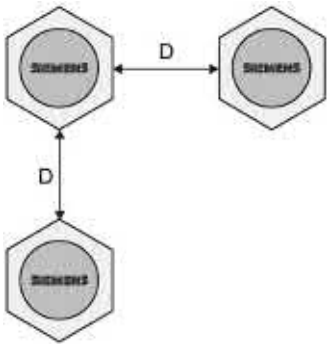

D ≥ 100 mm

Figure 6-32 Minimum distance for ANT 18

D ≥ 100 mm

Figure 6-33 Face-to-face distance between two ANT 18s

6.7.6 Technical data

		6GT2398-1CA00 6GT2398-1CA10
Product type designation	ANT 18	
Electrical data		
Maximum write/read distance ANT ↔ transponder (S_g)	35 mm	
Interfaces		
Plug connection	4-pin, pin on antenna side	
Mechanical specifications		
Housing		
• Material	• Plastic Crastin	
• Color	• Pale turquoise	

	6GT2398-1CA00 6GT2398-1CA10
Permitted ambient conditions	
Ambient temperature	
• During operation	• -20 ... +70 °C
• During transportation and storage	• -40 ... +85 °C
Degree of protection to EN 60529	IP67 (front)
Shock-resistant according to EN 60721-3-7 Class 7 M2 [1]	500 m/s^2
Vibration-resistant according to EN 60721-3-7 Class 7 M2 [1]	200 m/s^2

Design, dimensions and weight	
Dimensions (∅ x thread x L)	M18 x 1 x 55 mm
Weight	130 g
Type of mounting	2x plastic nuts M18 x 1
Cable length	3 m or 0.6 m

[1] Warning: The values for shock and vibration are maximum values and must not be applied continuously.

6.7.7 Dimension drawing

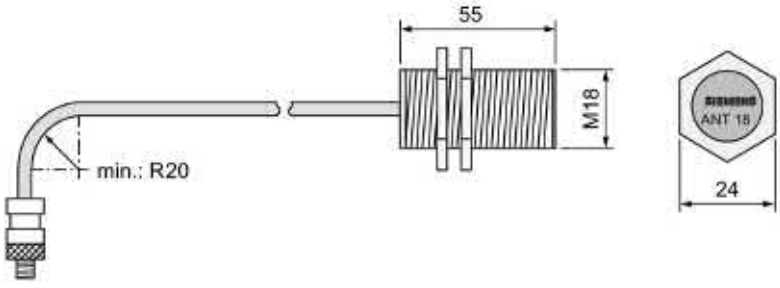

Figure 6-34 Dimension drawing ANT 18 (all values in mm)

6.8 ANT 18 (stainless steel variant)

6.8.1 Features

ANT 18 (stainless steel variant)	Characteristics	
	Area of application	Small assembly lines
	Writing/reading distance	up to 35 mm (depending on the transponder)
	Connecting cable	Plug-in 3 m
	Connectable readers	RF250R
	Degree of protection	IP67 with inserted cable

6.8.2 Ordering data

Table 6- 19 Ordering data for ANT 18 (stainless steel variant)

Antenna	Article number
ANT 18 (without antenna cable)	6GT2398-1DA00
ANT 18 (including one plug-in antenna cable 3 m)	6GT2398-1DA10

Table 6- 20 Ordering data ANT 18 accessories

Accessories	Article number
Antenna connecting cable drag-capable, 3 m	6GT2391-0AH30

6.8.3 Antenna connection

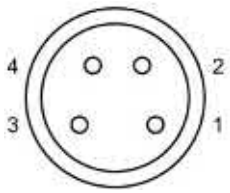

Pins 1 and 3	GND
Pins 2 and 4	Signal

CAUTION

Minimum requirements for the antenna connecting cable

We recommend that you use the antenna connecting cable "6GT2391-0AH30" from Siemens.

Pay attention to the following minimum requirements if you want to configure an antenna cable yourself:

- Temperature: 80 °C
- Conductor cross-section: AWG21

CAUTION

Check connections

The device could be damaged as a result of missing power supply. Therefore, check all connections prior to commissioning.

6.8.4 Transmission window

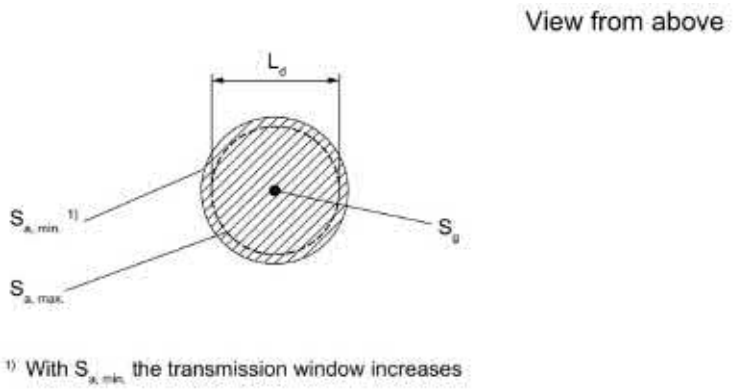

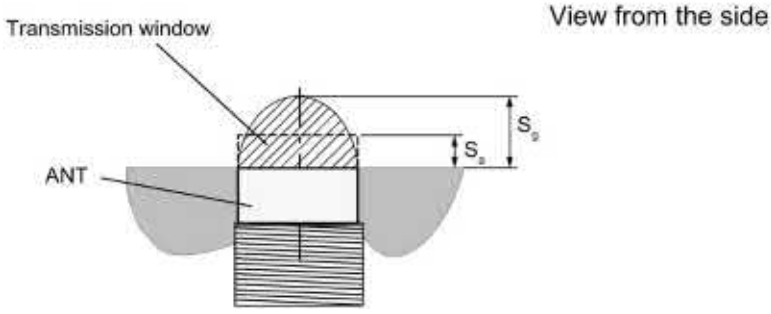

L_d Length of the transmission window (= 30 mm)

S_a Operating distance between antenna and transponder

S_g Limit distance (maximum clear distance between upper surface of the reader and the antenna, at which the transmission can still function under normal conditions)

Figure 6-35 Transmission window ANT 18 (stainless steel variant)

6.8.5 Flush-mounted in metal

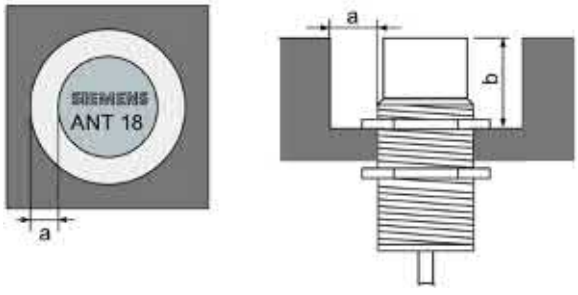

a = 10 mm

b = 10 mm

Figure 6-36 ANT 18 (stainless steel variant) flush-mounted in metal

6.8.6 Minimum spacing

Note

Extension of the data transmission time if distance values are undershot

If the distance values specified in the tables are undershot, it is possible that the inductive fields will be affected. In this case, the data transmission time can increase unpredictably or a command is aborted with an error.

For this reason, please observe the values in the tables.

Minimum distances from transponder to transponder (without multitag mode)

Table 6- 21 Minimum distances transponder edge to transponder edge

	MDS D124 / MDS D160 / MDS D324	MDS D421 / MDS D422 / MDS D423 / MDS D424 / MDS D425 / MDS D428 / MDS D460 / MDS D522 / MDS D524 / MDS D525 / MDS D528 / MDS D560
RF250R with ANT 18 (stainless steel variant)	≥ 80 mm	≥ 100 mm

Definition of distance D

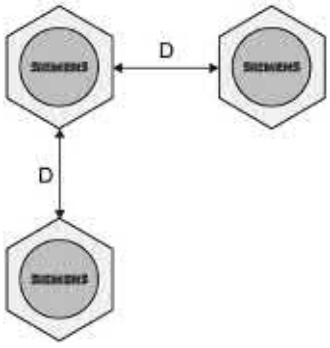

D ≥ 100 mm

Figure 6-37 Minimum distance ANT 18 (stainless steel variant)

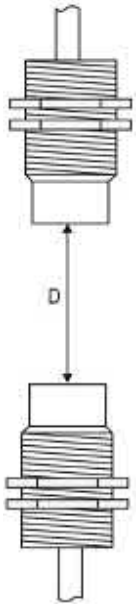

D ≥ 100 mm

Figure 6-38 Face-to-face minimum distance between two ANT 18 (stainless steel variant)

6.8.7 Technical data

	6GT2398-1DA00 [1)] 6GT2398-1DA10
Product type designation	ANT 18 (stainless steel variant)
Electrical data	
Input voltage of the antenna [2)]	max. 5 V AC (13.56 MHz)
Input current of the antenna [2)]	max. 85 mA AC (13.56 MHz)
Maximum write/read distance ANT ↔ transponder (S_g)	35 mm
Interfaces	
Plug connection	4-pin, socket
Mechanical specifications	
Enclosure	
• Material	• Stainless steel V2A / Pocan
• Color	• Silver/pastel turquoise

	6GT2398-1DA00 [1] 6GT2398-1DA10
Permitted ambient conditions	
Ambient temperature	
• During operation	• -20 ... +70 °C
• During transportation and storage	• -40 ... +85 °C
Ambient conditions regarding UL approval	• for indoor use only (dry location) • Degree of pollution 2 • Altitude < 2000 m • Overvoltage category 2 • Air humidity < 90 %
Degree of protection according to EN 60529	IP67 with inserted cable (IP-Rating is not investigated by UL)
Shock-resistant according to EN 60721-3-7 Class 7 M2 [3]	500 m/s^2
Vibration-resistant according to EN 60721-3-7 Class 7 M2 [3]	200 m/s^2

Design, dimensions and weight	
Dimensions (∅ x L)	18 x 40 mm
Thread (∅ x thread x L)	M18 x 1 x 30 mm
Weight without cable/with cable	40 g / 205 g
Type of mounting	2x stainless steel nuts M18 x 1

[1] Investigated by UL
The products 6GT2398-1DA10 and 6GT2398-1DA00 are identical in structure and only differ in the antenna connecting cable included in the scope of delivery.

[2] The supply source and ext. circuits intended to be connected to this device shall be galv. separated from mains supply or hazardous live voltage by reinforced or double insulation and meet the requirements of SELV/PELV circuit of UL/IEC61010-2-201 and clause 9.4 Limited energy circuit of UL/IEC 61010-1 or Class 2 of NEC or LPS of UL/IEC 60950".

[3] Warning: The values for shock and vibration are maximum values and must not be applied continuously.

6.8.8 Dimension drawing

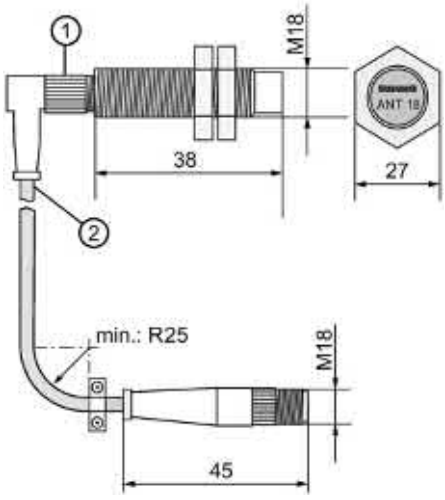

① The antenna connector may only be tightened by hand.

② The cable must be secured in front of/behind the support sleeve so that no bending strain can be transferred to the antenna connector.

Figure 6-39 Dimension drawing ANT 18 (stainless steel variant)

All dimensions in mm.

6.9 ANT 30

6.9.1 Features

ANT 30	Characteristics	
	Area of application	Small assembly lines
	Writing/reading distance	up to 55 mm (depending on the transponder)
	Connecting cable	3 m
	Connectable readers	RF250R
	Degree of protection	IP67 (front)

6.9.2 Ordering data

Table 6- 22 Ordering data ANT 30

Antenna	Article number
ANT 30 (including one integrated antenna connecting cable 3 m)	6GT2398-1CD00

6.9.3 Transmission window

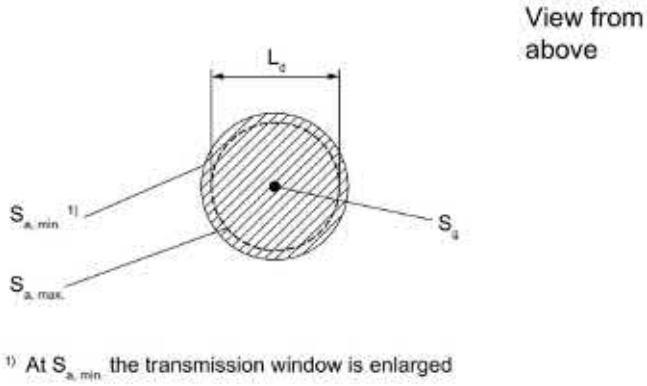

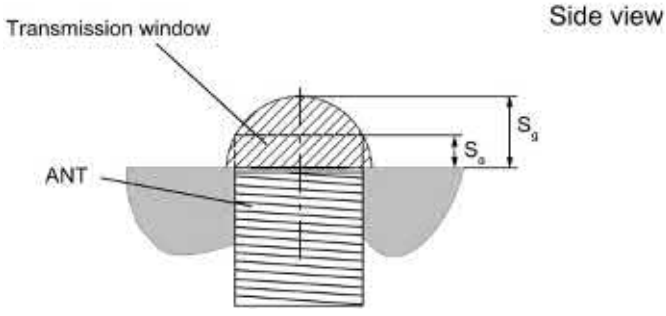

L_d Length of the transmission window (= 60 mm)

S_a Operating distance between antenna and transponder

S_g Limit distance (maximum clear distance between upper surface of the reader and the antenna, at which the transmission can still function under normal conditions)

Figure 6-40 Transmission window ANT 30

6.9.4 Flush-mounted in metal

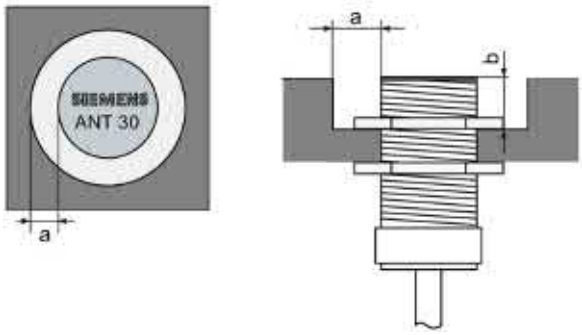

a = 20 mm
b = 20 mm

Figure 6-41 ANT 30 flush-mounted in metal

6.9.5 Minimum spacing

Note

Extension of the data transmission time if distance values are undershot

If the distance values specified in the tables are undershot, it is possible that the inductive fields will be affected. In this case, the data transmission time can increase unpredictably or a command is aborted with an error.

For this reason, please observe the values in the tables.

Minimum distances from transponder to transponder (without multitag mode)

Table 6- 23 Minimum distances transponder edge to transponder edge

	MDS D124 / MDS D160 / MDS D324 / MDS D423 / MDS D424 / MDS D460 / MDS D524 / MDS D560	MDS D422 / MDS D425 / MDS D428 / MDS D522 / MDS D525 / MDS D528 / MDS D525	MDS D126 / MDS D426 / MDS D526
RF250R with ANT 30	≥ 100 mm	≥ 80 mm	≥ 150 mm

Definition of distance D

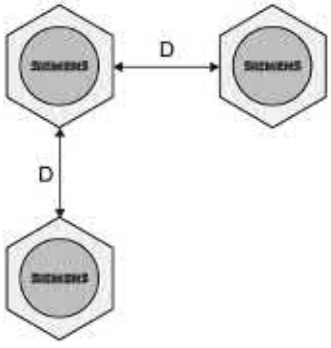

D ≥ 100 mm

Figure 6-42 Minimum distance for ANT 30

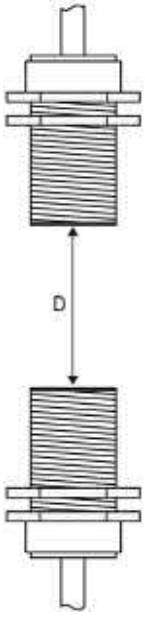

D ≥ 200 mm

Figure 6-43 Face-to-face distance between two ANT 30s

6.9.6 Technical data

	6GT2398-1CD00
Product type designation	ANT 30
Electrical data	
Maximum write/read distance ANT ↔ transponder (S_g)	60 mm
Interfaces	
Plug connection	4-pin, pin on antenna side
Mechanical specifications	
Housing	
• Material	• Plastic Crastin
• Color	• Pale turquoise
Permitted ambient conditions	
Ambient temperature	
• During operation	• -20 ... +70 °C
• During transportation and storage	• -40 ... +85 °C
Degree of protection to EN 60529	IP67 (front)
Shock-resistant according to EN 60721-3-7 Class 7 M2 [1]	500 m/s²
Vibration-resistant according to EN 60721-3-7 Class 7 M2 [1]	200 m/s²
Design, dimensions and weight	
Dimensions (∅ x thread x L)	M30 x 1.5 x 61 mm
Weight	180 g
Type of mounting	2x plastic nuts M30 x 1.5
Cable length	3 m

[1] Warning: The values for shock and vibration are maximum values and must not be applied continuously.

6.9.7 Dimension drawing

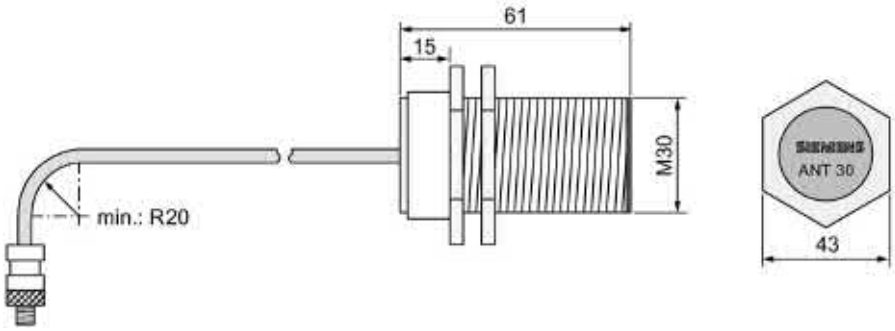

Figure 6-44 Dimension drawing ANT 30 (all values in mm)

6.10 ANT 30 (stainless steel variant)

6.10.1 Features

ANT 18 (stainless steel variant)	Characteristics	
	Area of application	Small assembly lines
	Writing/reading distance	up to 55 mm (depending on the transponder)
	Connecting cable	Plug-in 3 m
	Connectable readers	RF250R
	Degree of protection	IP67 with inserted cable

6.10.2 Ordering data

Table 6- 24 Ordering data for ANT 30 (stainless steel variant)

Antenna	Article number
ANT 30 (without antenna cable)	6GT2398-1DD00
ANT 30 (including one plug-in antenna cable 3 m)	6GT2398-1DD10

Table 6- 25 Ordering data ANT 30 accessories

Accessories	Article number
Antenna connecting cable drag-capable, 3 m	6GT2391-0AH30

6.10.3 Antenna connection

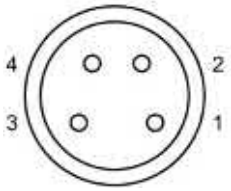

Pins 1 and 3	GND
Pins 2 and 4	Signal

CAUTION

Minimum requirements for the antenna connecting cable

We recommend that you use the antenna connecting cable "6GT2391-0AH30" from Siemens.

Pay attention to the following minimum requirements if you want to configure an antenna cable yourself:

- Temperature: 80 °C
- Conductor cross-section: AWG21

CAUTION

Check connections

The device could be damaged as a result of missing power supply. Therefore, check all connections prior to commissioning.

6.10.4 Transmission window

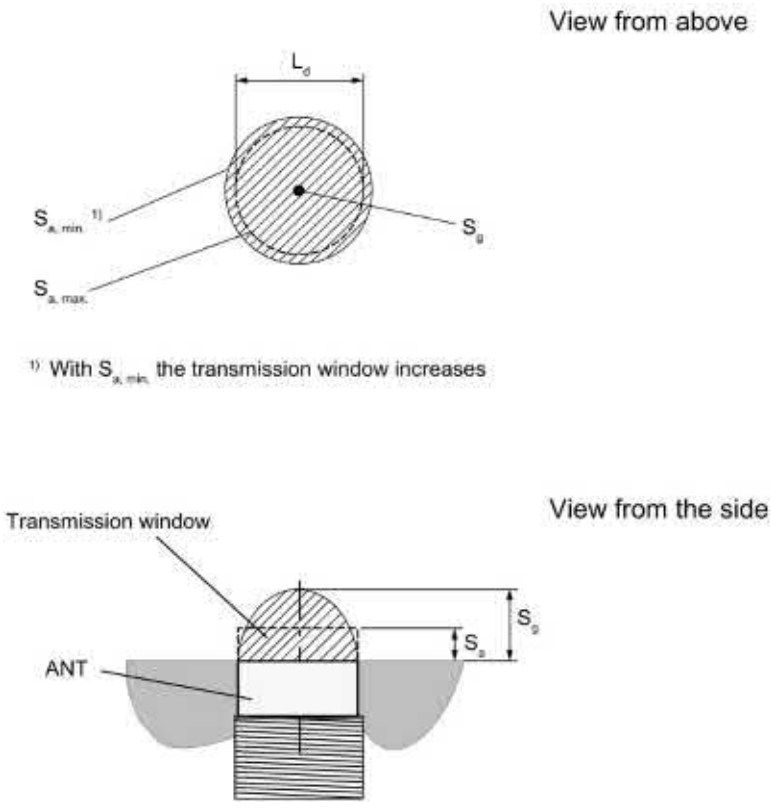

L_d Length of the transmission window (= 60 mm)

S_a Operating distance between antenna and transponder

S_g Limit distance (maximum clear distance between upper surface of the reader and the antenna, at which the transmission can still function under normal conditions)

Figure 6-45 Transmission window ANT 30 (stainless steel variant)

6.10.5 Flush-mounted in metal

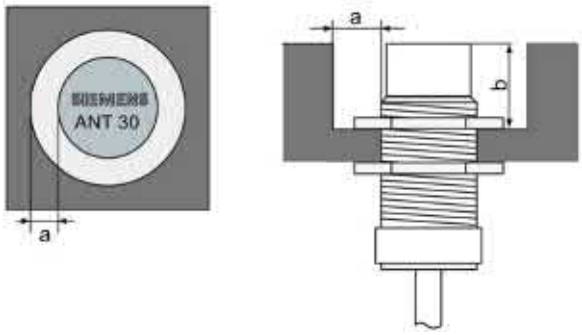

a = 20 mm

b = 20 mm

Figure 6-46 ANT 30 (stainless steel variant) flush-mounted in metal

6.10.6 Minimum spacing

Note

Extension of the data transmission time if distance values are undershot

If the distance values specified in the tables are undershot, it is possible that the inductive fields will be affected. In this case, the data transmission time can increase unpredictably or a command is aborted with an error.

For this reason, please observe the values in the tables.

Minimum distances from transponder to transponder (without multitag mode)

Table 6- 26 Minimum distances transponder edge to transponder edge

	MDS D124 / MDS D160 / MDS D324 / MDS D423 / MDS D424 / MDS D460 / MDS D524	MDS D422 / MDS D425 / MDS D428 / MDS D522 / MDS D525 / MDS D528	MDS D126 / MDS D426 / MDS D526
RF250R with ANT 30 (stainless steel variant)	≥ 100 mm	≥ 80 mm	≥ 150 mm

Definition of distance D

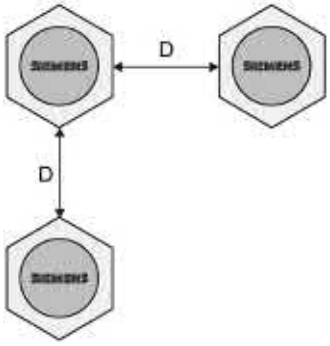

D ≥ 100 mm

Figure 6-47 Minimum distance ANT 30 (stainless steel variant)

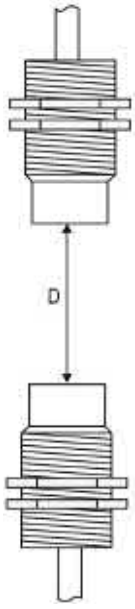

D ≥ 200 mm

Figure 6-48 Face-to-face minimum distance between two ANT 30 (stainless steel variant)

6.10.7 Technical data

	6GT2398-1DD00 [1] 6GT2398-1DD10
Product type designation	ANT 30 (stainless steel variant)
Electrical data	
Input voltage of the antenna [2]	max. 5 V AC (13.56 MHz)
Input current of the antenna [2]	max. 85 mA AC (13.56 MHz)
Maximum write/read distance ANT ↔ transponder (S_g)	60 mm
Interfaces	
Plug connection	4-pin, socket
Mechanical specifications	
Enclosure	
• Material	• Stainless steel V2A / Pocan
• Color	• Silver/pastel turquoise
Permitted ambient conditions	
Ambient temperature	
• During operation	• -20 ... +70 °C
• During transportation and storage	• -40 ... +85 °C
Ambient conditions regarding UL approval	• for indoor use only (dry location) • Degree of pollution 2 • Altitude < 2000 m • Overvoltage category 2 • Air humidity < 90 %
Degree of protection according to EN 60529	IP67 with inserted cable (IP-Rating is not investigated by UL)
Shock-resistant according to EN 60721-3-7 Class 7 M2 [3]	500 m/s^2
Vibration-resistant according to EN 60721-3-7 Class 7 M2 [3]	200 m/s^2

	6GT2398-1DD00 [1)] 6GT2398-1DD10
Design, dimensions and weight	
Dimensions (∅ x L)	30 x 40 mm
Thread (∅ x thread x L)	M30 x 1.5 x 30 mm
Weight without cable/with cable	95 g / 260 g
Type of mounting	2x stainless steel nuts M30 x 1.5

1) Investigated by UL
The products 6GT2398-1DD10 and 6GT2398-1DD00 are identical in structure and only differ in the antenna connecting cable included in the scope of delivery.

2) The supply source and ext. circuits intended to be connected to this device shall be galv. separated from mains supply or hazardous live voltage by reinforced or double insulation and meet the requirements of SELV/PELV circuit of UL/IEC61010-2-201 and clause 9.4 Limited energy circuit of UL/IEC 61010-1 or Class 2 of NEC or LPS of UL/IEC 60950".

3) Warning: The values for shock and vibration are maximum values and must not be applied continuously.

6.10.8 Dimension drawing

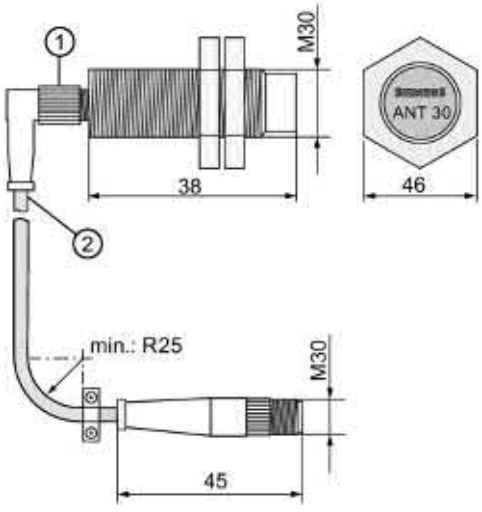

Figure 6-49 Dimension drawing ANT 30 (stainless steel variant)

All dimensions in mm.

6.11 ANT D1

6.11.1 Characteristics

ANT D1	Characteristics	
	Area of application	Assembly lines and production plants
	Read/write distance	up to 250 mm (depending on the transponder)
	Connecting cable	3.3 m (plug-in antenna connecting cable)
	Connectable readers	RF285R, RF290R
	Degree of protection	IP67

6.11.2 Ordering data

Table 6- 27 ANT D1 ordering data

Antenna	Article number
ANT D1 (incl. one plug-in antenna connecting cable 3.3 m)	6GT2698-5AC00

Table 6- 28 Ordering data of ANT D1 accessories

Accessories	Article number
Antenna connecting cable, 3.3 m	6GT2691-0CH33

6.11.3 Flush mounting on/in metal

The tuning of the ANT D1 antenna is optimized for mounting on metal and can be mounted directly on or flush in metal.

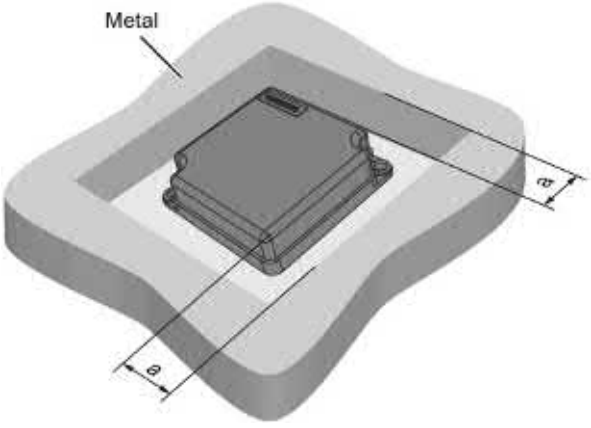

a = 30 mm

Figure 6-50 ANT D1 flush-mounted in metal

6.11.4 Minimum clearances

Note

Extension of the data transmission time if distance values are undershot

If the distance values specified in the tables are undershot, it is possible that the inductive fields will be affected. In this case, the data transmission time can increase unpredictably or a command is aborted with an error.

For this reason, please observe the values in the tables.

Minimum distances from antenna to antenna

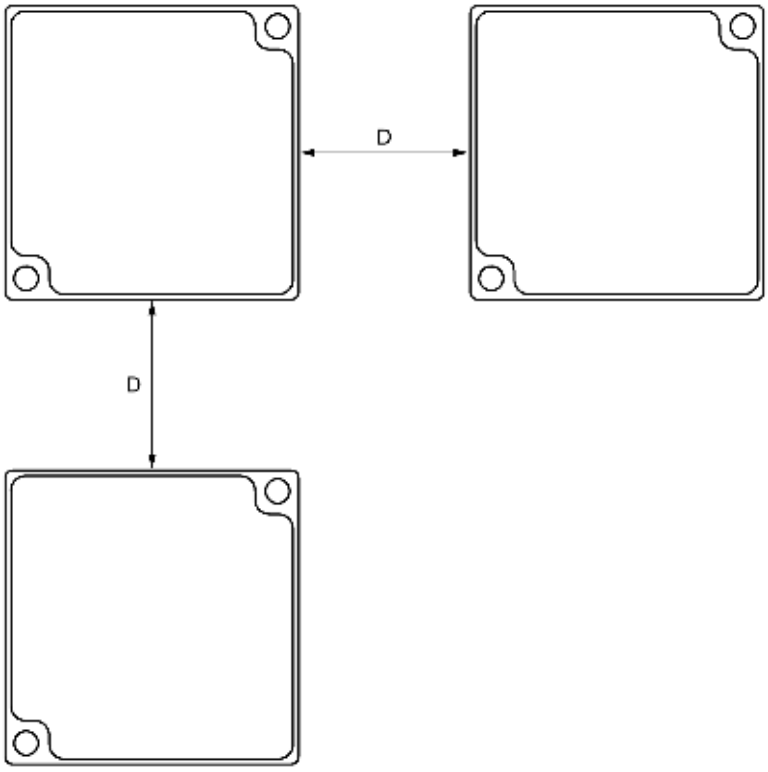

D ≥ 600 mm with 2 antennas
≥ 800 mm with 3 antennas

Figure 6-51 Minimum clearance ANT D1

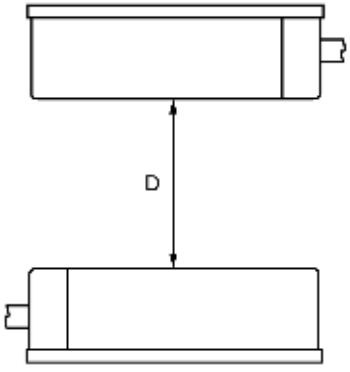

D ≥ 800 mm

Figure 6-52 Face-to-face minimum clearance between two ANT D1

6.11.5 Technical specifications

	6GT2698-5AC00
Product type designation	ANT D1
Electrical data	
Maximum write/read distance ANT ↔ Transponder (S_g)	250 mm
Power rating (max.)	2 W
Interfaces	
Plug connection	TNC socket, pins on antenna side
Mechanical specifications	
Housing	
• Material	• Plastic PA 12
• Color	• Anthracite
MTBF	13698 years
Permitted ambient conditions	
Ambient temperature	
• During operation	• -25 ... +55 °C
• During transportation and storage	• -40 ... +70 °C
Degree of protection to EN 60529	IP67
Shock-resistant according to EN 60721-3-7 Class 7 M2 [1)]	50 g
Vibration-resistant according to EN 60721-3-7 Class 7 M2 [1)]	20 g
Design, dimensions and weight	
Dimensions (L × W × H)	
• Housing without antenna connector	• 75 × 75 × 20 mm
• Housing with antenna connector	• 200 × 75 × 20 mm
Weight	
• Housing with antenna connector	• Approx. 110 g
• Housing with antenna connector and antenna connecting cable	• Approx. 270 g
Type of mounting	2 x M5 screws
Cable length	3.3 m (plug-in antenna connecting cable)

1) Warning: The values for shock and vibration are maximum values and must not be applied continuously.

6.11.6 Dimension drawing

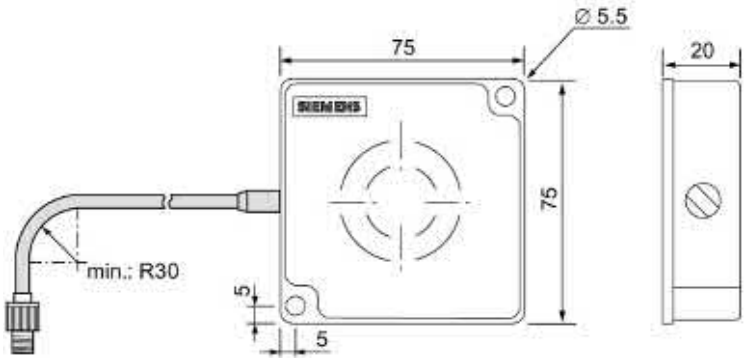

Figure 6-53 Dimension drawing ANT D1 (all values in mm)

6.12 ANT D5

6.12.1 Features

ANT D5	Characteristics	
	Area of application	Storage, logistics and distribution
	Writing/reading distance	up to 500 mm (depending on the transponder)
	Connecting cable	3.3 m
	Readers that can be connected	RF285R, RF290R
	Degree of protection	IP65

6.12.2 Ordering data

Table 6- 29 Ordering data of ANT D5

Antenna	Article number
ANT D5 (incl. one plug-in antenna connecting cable 3.3 m)	6GT2698-5AA10

Table 6- 30 Ordering data of ANT D5 accessories

Accessories		Article number
Antenna splitter (incl. one antenna connecting cable 3.3 m)		6GT2690-0AC00
Antenna cable	Length 3.3 m	6GT2691-0CH33
	Length 10.5 m	6GT2691-0CN10
Antenna extension cable, length 7.2 m		6GT2691-0DH72

6.12.3 Transmission window

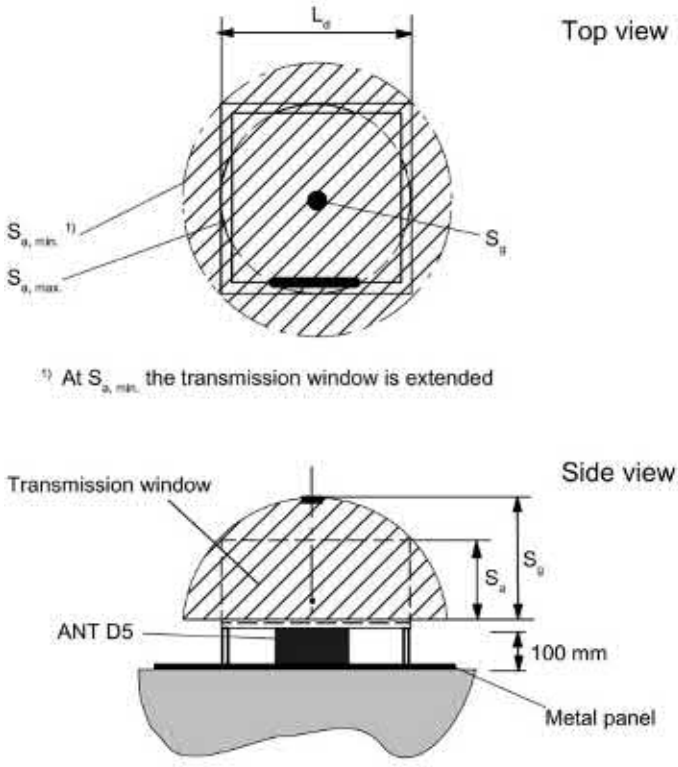

L_d Length of the transmission window (= 300 mm)

S_a Operating distance between antenna and transponder

S_g Limit distance (maximum clear distance between upper surface of the reader and the antenna, at which the transmission can still function under normal conditions)

Figure 6-54 Transmission window for ANT D5

6.12.4 Flush-mounted in metal

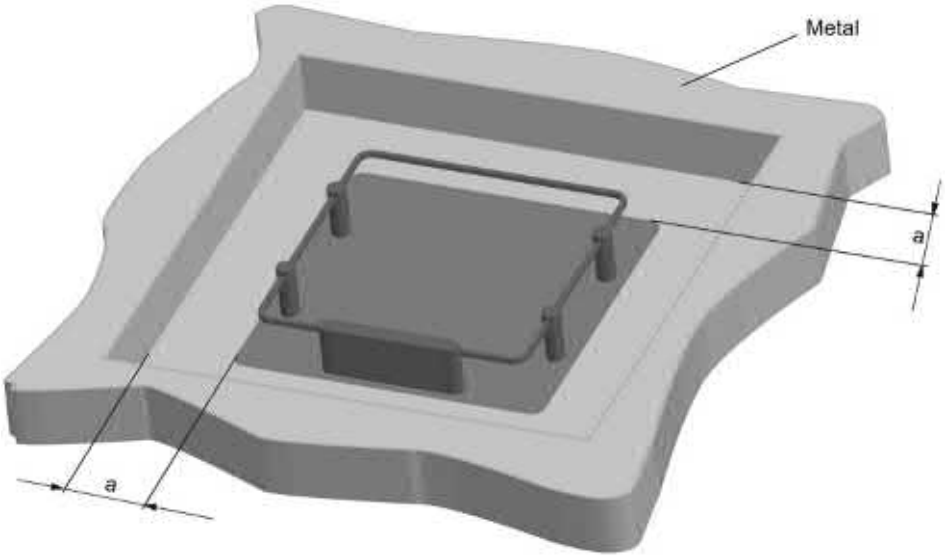

a = 150 mm

Figure 6-55 Metal-free area for ANT D5

6.12.5 Minimum spacing

Note

Extension of the data transmission time if distance values are undershot

If the distance values specified in the tables are undershot, it is possible that the inductive fields will be affected. In this case, the data transmission time can increase unpredictably or a command is aborted with an error.

For this reason, please observe the values in the tables.

Minimum distances from antenna to antenna

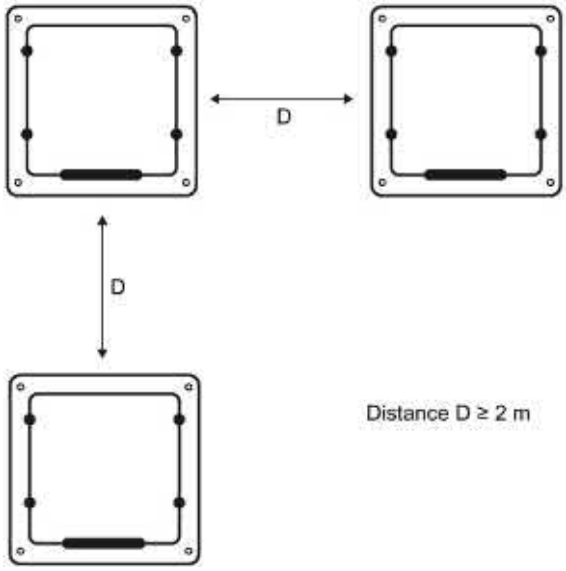

D ≥ 1500 mm in conjunction with RF285R
≥ 2000 mm in conjunction with RF290R

Figure 6-56 Minimum clearance ANT D5

6.12.6 Technical data

	6GT2698-5AA10
Product type designation	ANT D5
Electrical data	
Maximum write/read distance ANT ↔ transponder (S_g)	500 mm
Interfaces	
Plug connection	1-pin TNC plug
Mechanical specifications	
Housing	
• Material	• Aluminum/plastic
• Color	• gray/black
Permitted ambient conditions	
Ambient temperature	
• During operation	• -20 ... +55 °C
• During transportation and storage	• -25 ... +70 °C
Degree of protection to EN 60529	IP65 (UL: For indoor use only)
Shock-resistant according to EN 60721-3-7 Class 7 M2 [1]	300 m/s²
Vibration-resistant according to EN 60721-3-7 Class 7 M2 [1]	• 10 m/s² (9 ... 200 Hz) • 15 m/s² (200 ... 500 Hz)
Design, dimensions and weight	
Dimensions (L x W x H)	380 x 380 x 110 mm
Weight	1.2 kg
Type of mounting	4x M6 or alternatively M8 screws
Cable length	3.3 m

[1] Warning: The values for shock and vibration are maximum values and must not be applied continuously.

6.12.7 Dimension drawing

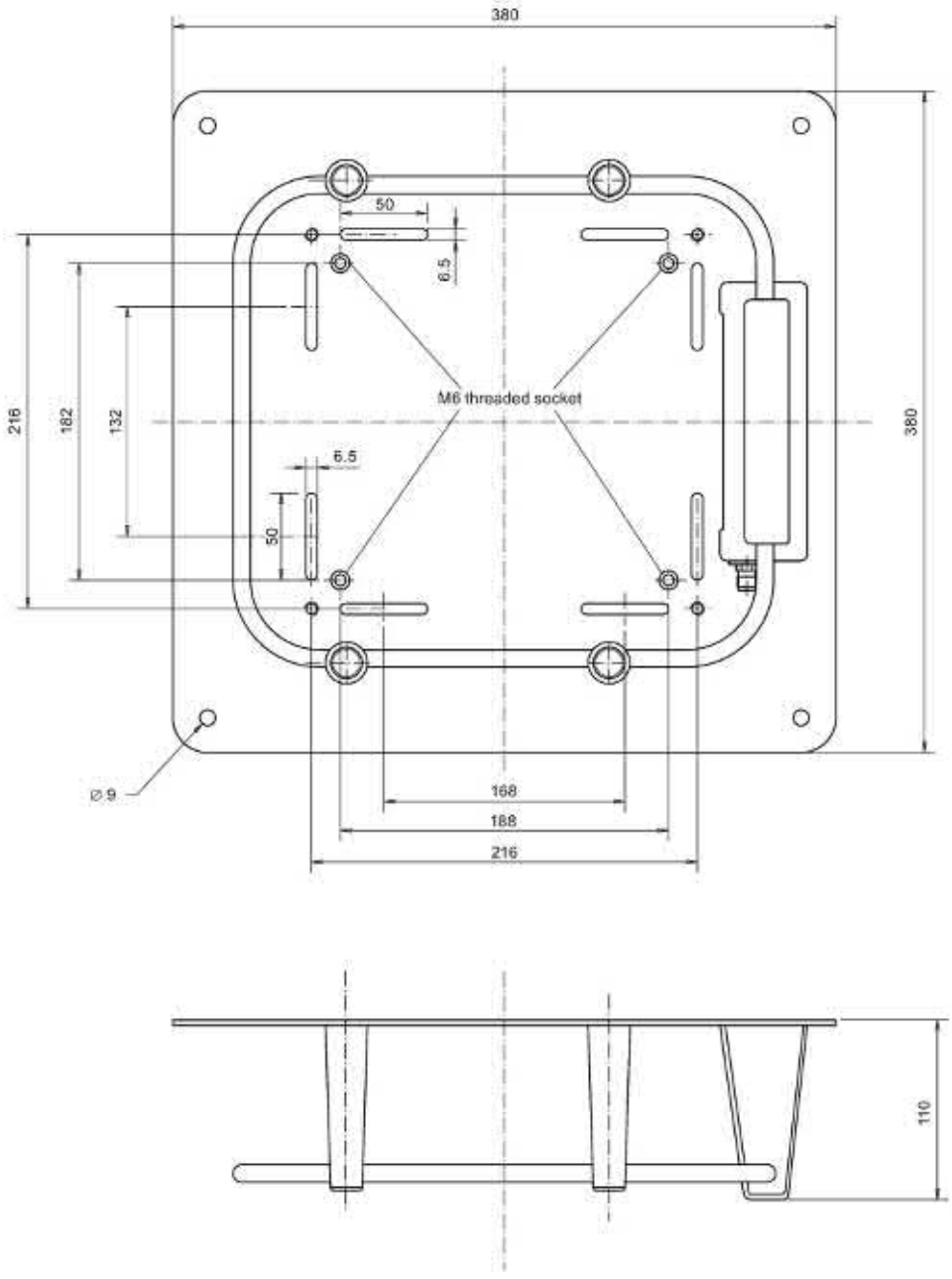

Figure 6-57 Dimension drawing for ANT D5

6.13 ANT D6

6.13.1 Features

ANT D6	Characteristics	
	Area of application	• Storage, logistics and distribution • Suitable for high-speed applications with large writing/reading distance
	Writing/reading distance	up to 650 mm (depending on the transponder)
	Connecting cable	3.3 m; included in scope of supply
	Cover	Available as accessory
	Readers that can be connected	RF285R, RF290R
	Degree of protection	IP65 (also without cover)

6.13.2 Ordering data

Table 6- 31 ANT D6 ordering data

Antenna	Article number
ANT D6 (without cover, incl. one antenna connecting cable 3.3 m)	6GT2698-5AB00

Table 6- 32 Ordering data for ANT D6 accessories

Accessories		Article number
Covering hood for ANT D6		6GT2690-0AD00
Antenna splitter (incl. one antenna connecting cable 3.3 m)		6GT2690-0AC00
Antenna cable	Length 3.3 m	6GT2691-0CH33
	Length 10.5 m	6GT2691-0CN10
Antenna extension cable, length 7.2 m		6GT2691-0DH72

6.13.3 Transmission window

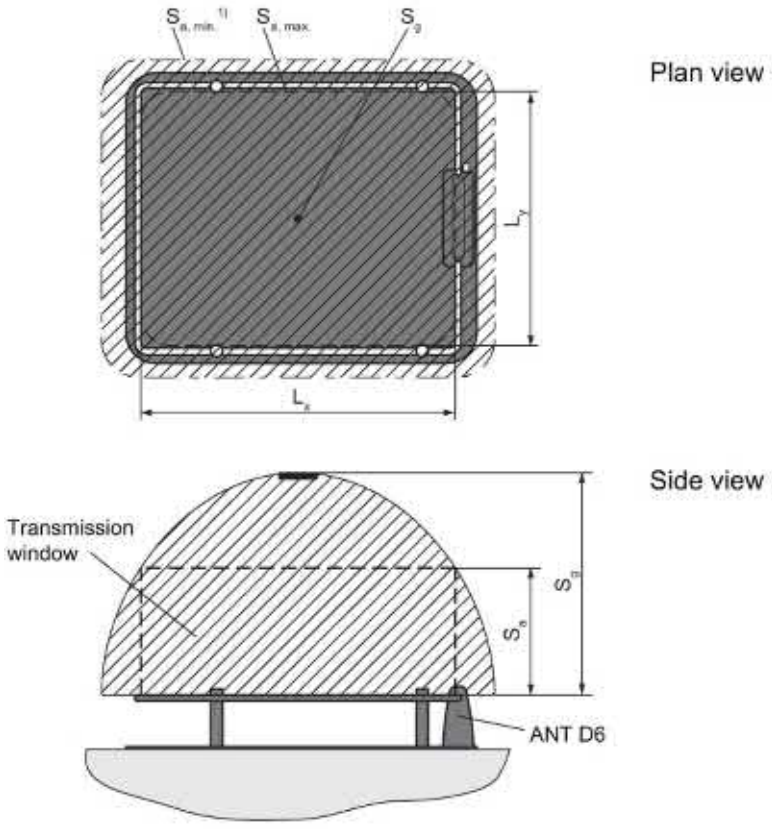

1) For $S_{a,min.}$, the transmission window is extended

L_x = 520 mm

L_y = 420 mm

Figure 6-58 Transmission window for ANT D6

6.13.4 Metal-free area

Flush-mounted in metal

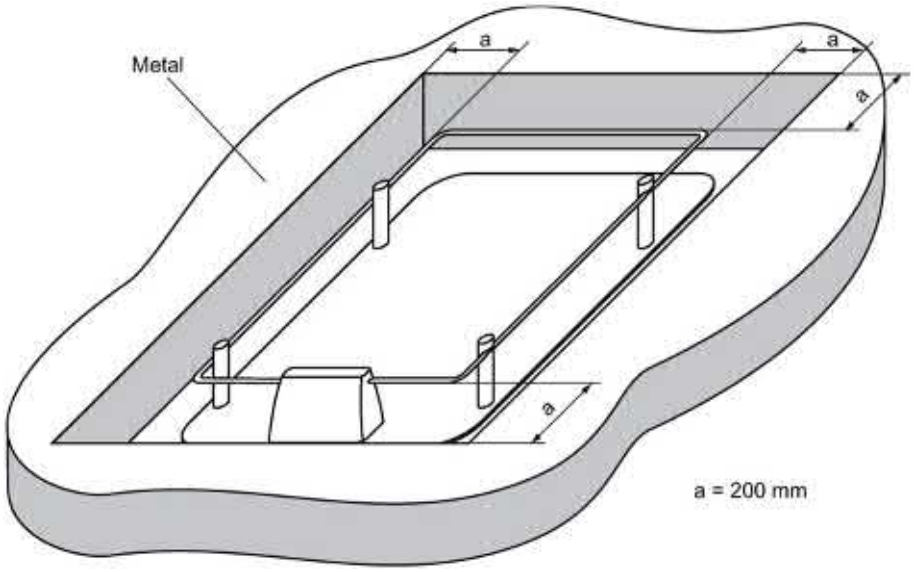

Figure 6-59 Metal-free area for ANT D6

6.13.5 Minimum distance

Minimum distances from antenna to antenna

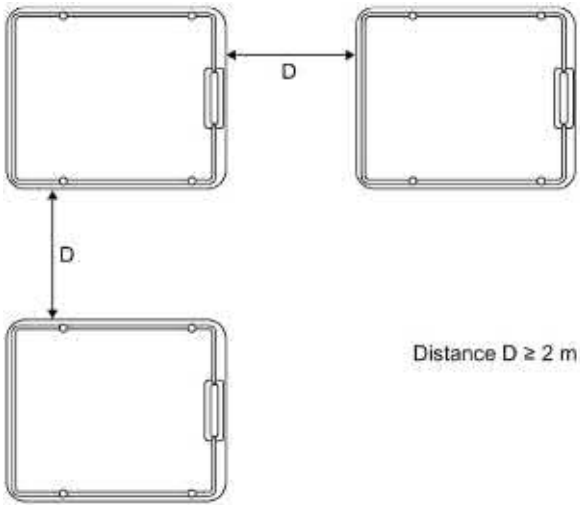

D ≥ 1500 mm in conjunction with RF285R
≥ 2000 mm in conjunction with RF290R

Figure 6-60 Minimum clearance ANT D6

6.13.6 Technical data

	6GT2698-5AB00
Product type designation	ANT D6
Electrical data	
Maximum write/read distance ANT ↔ transponder (S_g)	650 mm
Interfaces	
Plug connection	1-pin TNC plug
Mechanical specifications	
Housing	
• Material	• Aluminum/plastic
• Color	• gray/black
Permitted ambient conditions	
Ambient temperature	
• During operation	• -20 ... +55 °C
• During transportation and storage	• -25 ... +70 °C
Degree of protection to EN 60529	IP65 (UL: For indoor use only)
Shock-resistant according to EN 60721-3-7 Class 7 M2 [1]	300 m/s²
Vibration-resistant according to EN 60721-3-7 Class 7 M2 [1]	• 10 m/s² (9 ... 200 Hz) • 15 m/s² (200 ... 500 Hz)
Design, dimensions and weight	
Dimensions (L x W x H)	580 x 480 x 110 mm
Weight	3.3 kg (without cover)
Type of mounting	4 x M6 screws
Cable length	3.3 m

[1] Warning: The values for shock and vibration are maximum values and must not be applied continuously.

6.13.7 Dimensional diagram

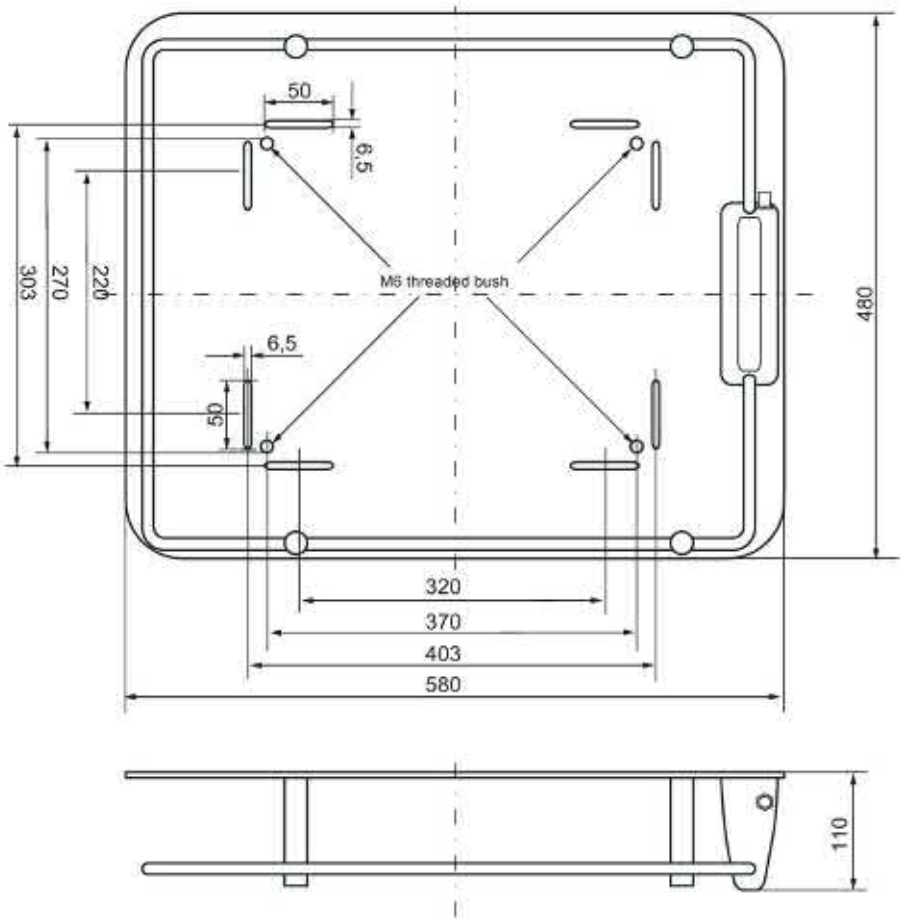

Figure 6-61 Dimension drawing for ANT D6

6.14 ANT D10

6.14.1 Features

ANT D10	Characteristics	
	Area of application	• Storage, logistics and distribution, e.g. clothing industry, laundries • Particularly when small MDS are used (e.g. MDS D124, MDS D160) and when there is a long transmission field
	Writing/reading distance	up to 480 mm (depending on the transponder)
	Connecting cable	3.3 m; included in scope of supply
	Cover	Included in scope of supply
	Readers that can be connected	RF290R

6.14.2 Ordering data

Table 6- 33 Ordering data of ANT D10

Antenna	Article number
ANT D10 (incl. cover and one plug-in antenna connecting cable 3.3 m)	6GT2698-5AF00

Table 6- 34 Ordering data of ANT D10 accessories

Accessories		Article number
Antenna splitter (incl. one antenna connecting cable 3.3 m)		6GT2690-0AC00
Antenna cable	Length 3.3 m	6GT2691-0CH33
	Length 10.5 m	6GT2691-0CN10
Antenna extension cable, length 7.2 m		6GT2691-0DH72

6.14.3 Transmission window

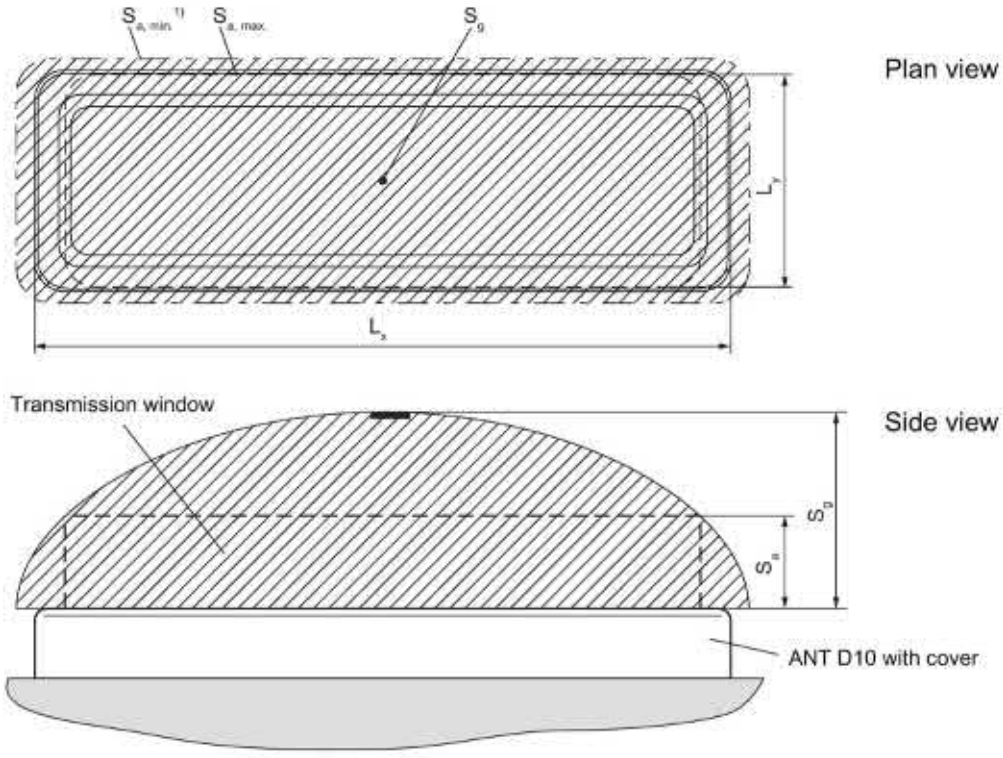

[1] For $S_{a,min}$ the transmission window is extended

L_x 1050 mm

L_y 350 mm

Figure 6-62 Transmission window for ANT D10

6.14.4 Metal-free area

Flush-mounted in metal

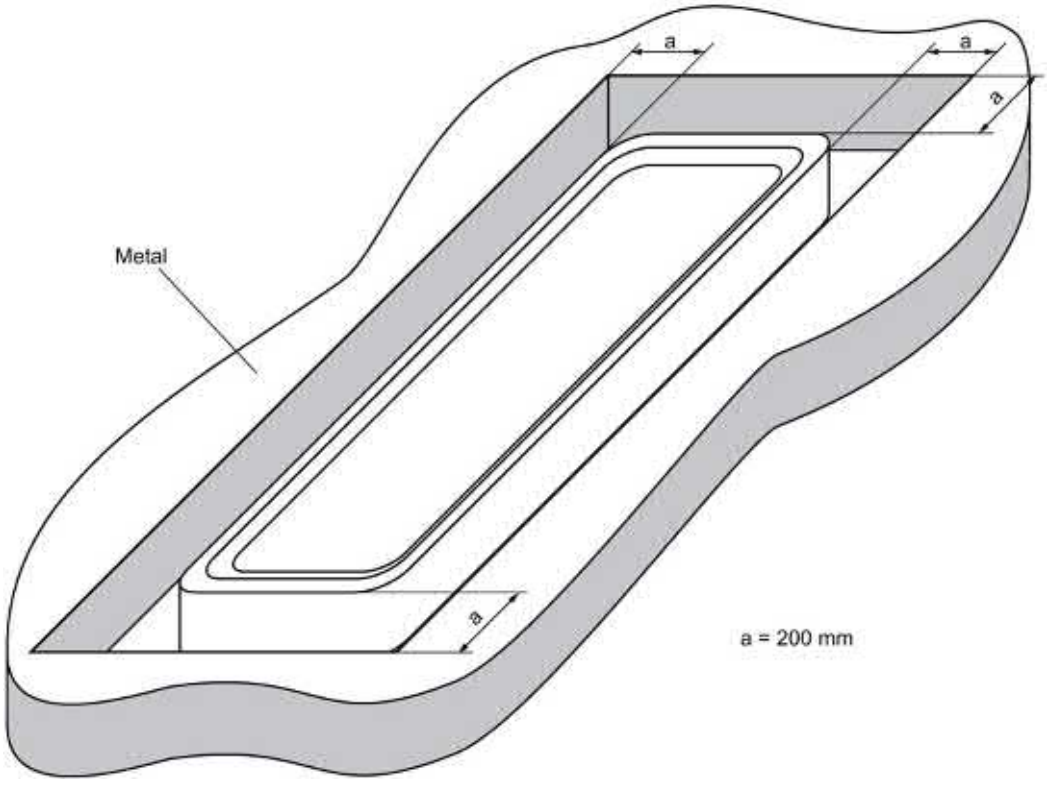

Figure 6-63 Metal-free area for ANT D10

6.14.5 Minimum distance

Minimum distances from antenna to antenna

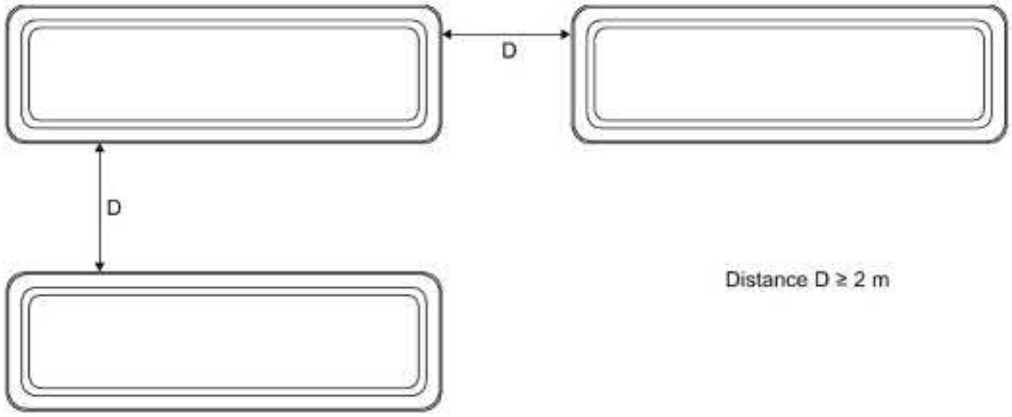

D ≥ 2000 mm in conjunction with RF290R

Figure 6-64 Minimum clearance ANT D10

6.14.6 Technical data

		6GT2698-5AF00
Product type designation	ANT D10	
Electrical data		
Maximum write/read distance ANT ↔ transponder (S_g)	480 mm	
Interfaces		
Plug connection	1-pin TNC plug	
Mechanical specifications		
Housing		
• Material	• Aluminum/plastic	
• Color	• gray/black	

	6GT2698-5AF00
Permitted ambient conditions	
Ambient temperature	
• During operation	• -20 ... +55 °C
• During transportation and storage	• -25 ... +70 °C
Degree of protection to EN 60529	IP65 (UL: For indoor use only)
Shock-resistant according to EN 60721-3-7 Class 7 M2 [1]	300 m/s²
Vibration-resistant according to EN 60721-3-7 Class 7 M2 [1]	• 10 m/s² (9 ... 200 Hz) • 15 m/s² (200 ... 500 Hz)
Design, dimensions and weight	
Dimensions (L x W x H)	1150 x 365 x 115 mm (with cover)
Weight	10 kg
Type of mounting	4 x M6 screws
Cable length	3.3 m

[1] Warning: The values for shock and vibration are maximum values and must not be applied continuously.

6.14.7 Dimensional diagram

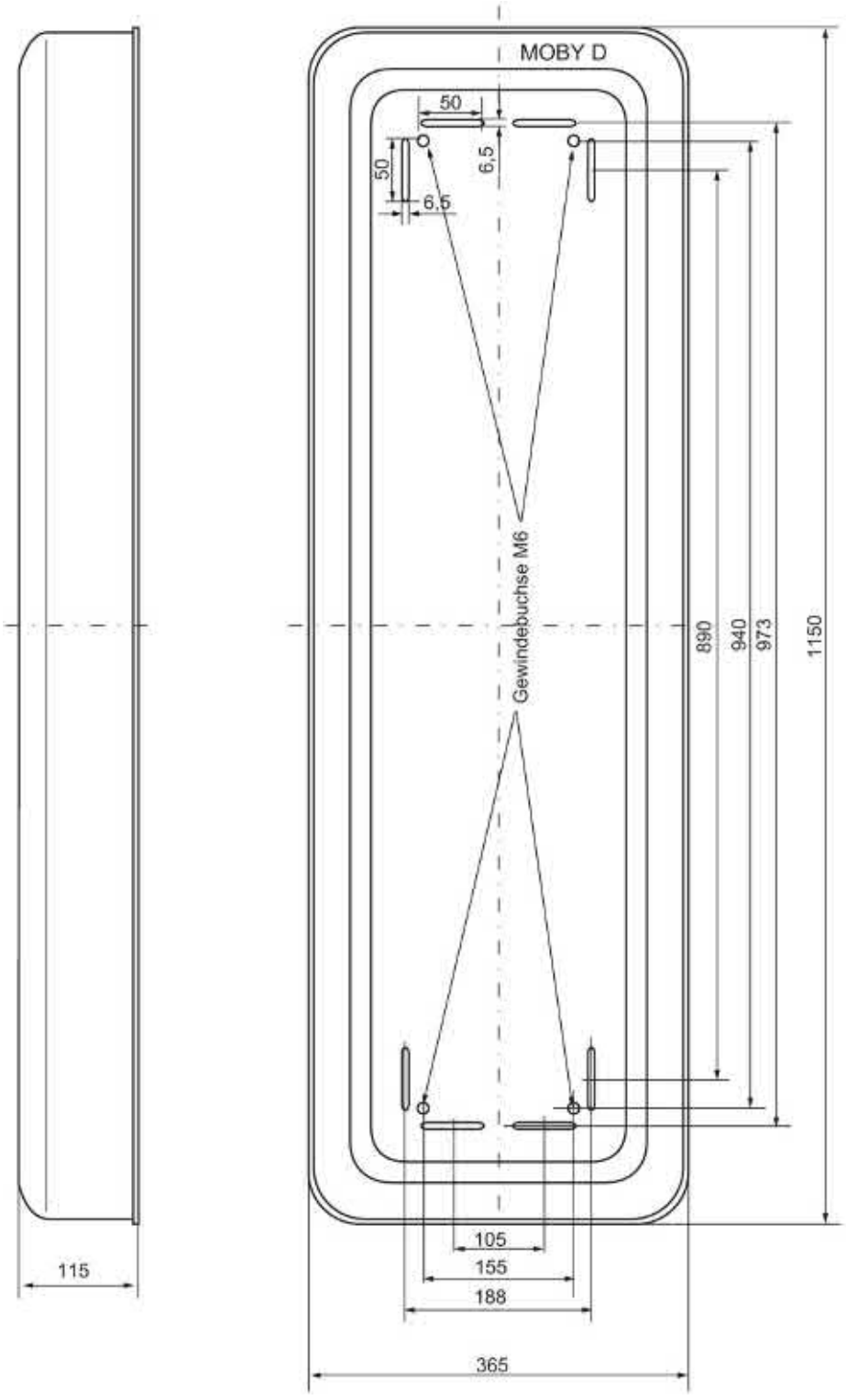

Figure 6-65 Dimension drawing for ANT D10

Transponder

7

7.1 Memory configuration of ISO the transponders

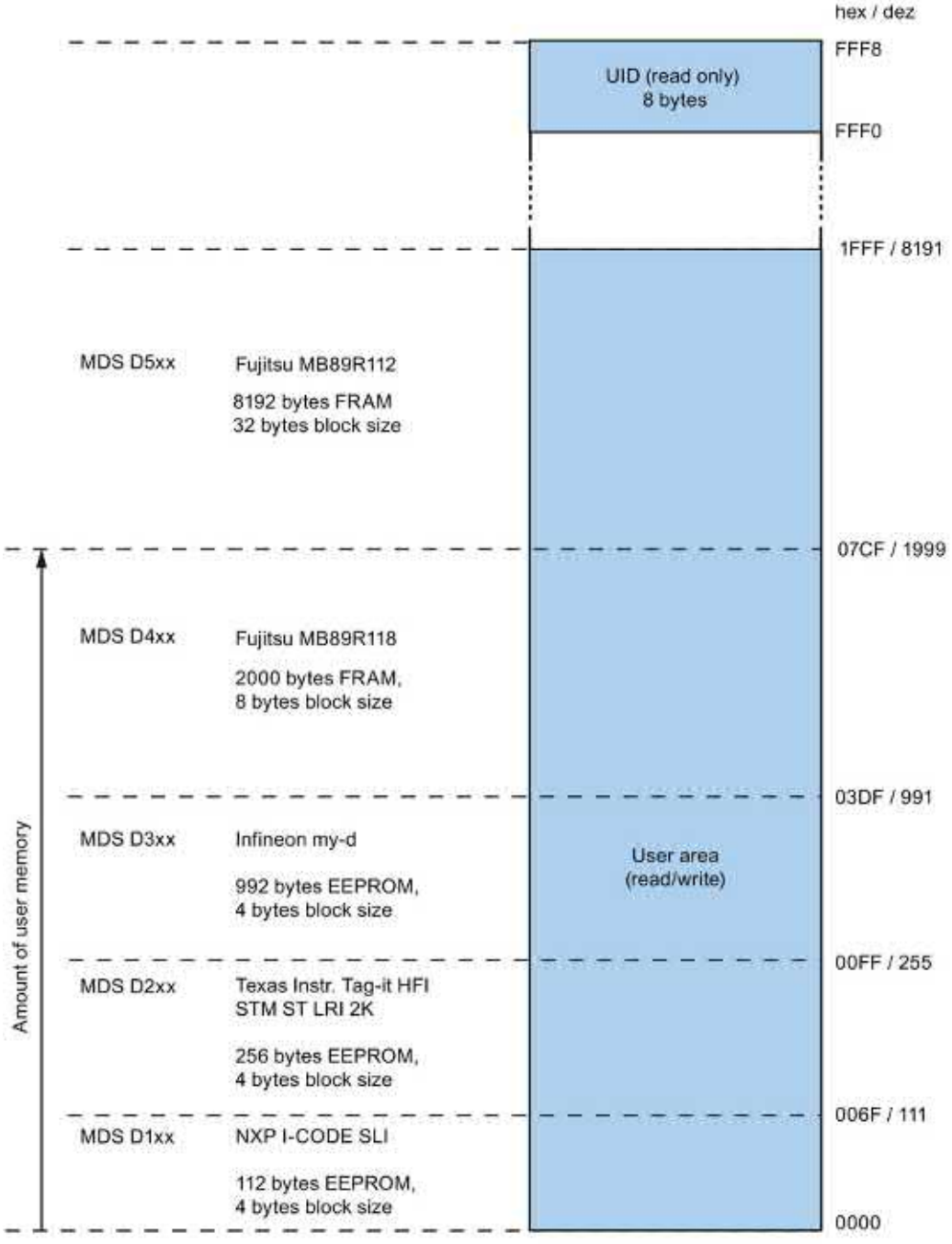

Figure 7-1 Memory configuration of ISO the transponders

Memory areas

Depending on the manufacturer of the transponder chip, the memory configuration of an ISO transponder consists of varying sizes of user memory.

The typical sizes are 112 bytes, 256 bytes, 992 bytes EEPROM or 2000 bytes, 8192 bytes FRAM. Each ISO transponder chip has an 8-byte long unique serial number (UID, read only). This UID is transferred as an 8 byte value through a read command to address FFF0 with a length of 8.

Note

OPT memory

The transponders have an OTP memory. This was previously only supported by the RF300 readers.

7.2 MDS D100

7.2.1 Characteristics

MDS D100	Characteristics	
	Area of application	From simple identification such as electronic barcode replacement/supplementation, through warehouse and distribution logistics, right up to product identification.
	Memory size	112 bytes of EEPROM user memory
	Write/read range	See section Field data (Page 39).
	Mounting on metal	Yes, with spacer
	ISO standard	ISO 15693
	Degree of protection	IP68

7.2.2 Ordering data

Table 7- 1 Ordering data for MDS D100

	Article number
MDS D100	6GT2600-0AD10

Table 7- 2 Ordering data for MDS D100 accessory

	Article number
Spacer (in conjunction with fixing pocket 6GT2190-0AB00)	6GT2190-0AA00
Fixing pocket (in conjunction with spacer 6GT2190-0AA00)	6GT2190-0AB00
Fixing pocket (not suitable for fixing directly onto metal)	6GT2390-0AA00

7.2.3 Metal-free area

Direct mounting of the MDS D100 on metal is not allowed. A distance of ≥ 20 mm is recommended. This can be achieved using the spacer 6GT2190-0AA00 in combination with the fixing pocket 6GT2190-0AB00.

Mounting on metal

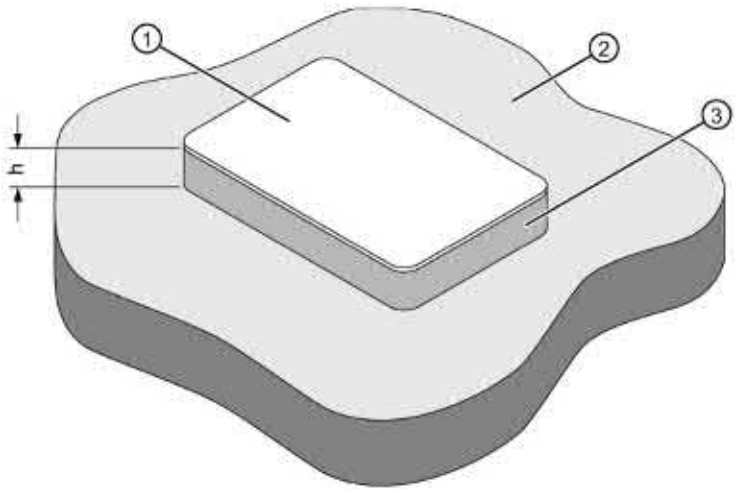

h ≥ 20 mm
① Transponder
② Metal
③ Non-metal

Figure 7-2 Mounting of the MDS D100 on metal with spacer

Flush-mounting

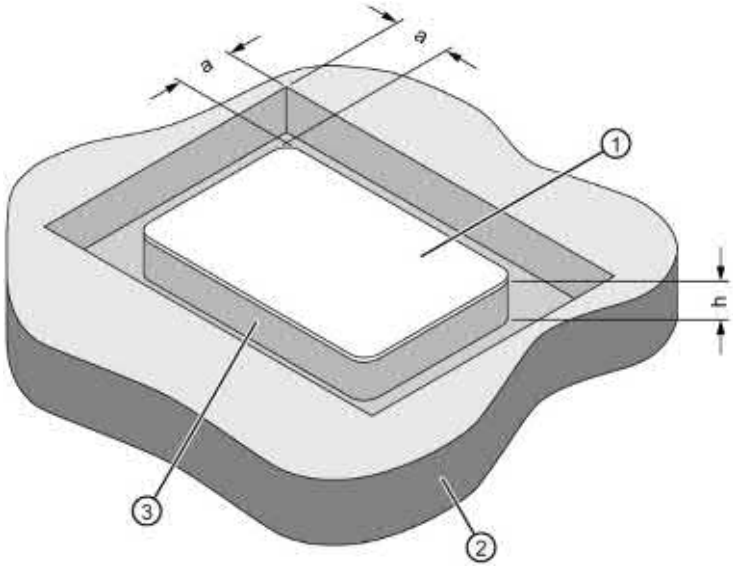

a ≥ 20 mm
h ≥ 20 mm
① Transponder
② Metal
③ Non-metal

Figure 7-3 Flush-mounting of MDS D100 in metal with spacer

Note

If the minimum guide values (h or a) are not observed, a reduction of the field data results.

7.2.4 Technical data

Table 7- 3 Technical specifications for MDS D100

	6GT2600-0AD10
Product type designation	SIMATIC MDS D100
Memory	
Memory configuration	
• UID	• 8 bytes
• User memory	• 112 bytes EEPROM
• OTP memory	• 16 bytes (EEPROM)
Read cycles (at < 40 °C)	> 10^{14}
Write cycles (at < 40 °C)	> 10^{6}
Data retention time (at < 40 °C)	> 10 years
Write/read distance (S_g)	Dependent on the reader used, see section "Field data (Page 39)"
MTBF (Mean Time Between Failures)	228 years
Mechanical specifications	
Enclosure	
• Material	• PET
• Color	• White/black
Recommended distance to metal	≥ 20 mm
Power supply	Inductive, without battery
Permitted ambient conditions	
Ambient temperature	
• during write/read access	• -25 … +80 °C
• outside the read/write field	• -25 … +80 °C
• during storage	• -25 … +80 °C
Degree of protection according to EN 60529	IP68
Shock-resistant acc. to EN 60721-3-7, Class 7M2	ISO 10373 / ISO 7810 [1)]
Vibration-resistant according to EN 60721-3-7 Class 7M2	ISO 10373 / ISO 7810 [1)]
Torsion and bending load	ISO 10373 / ISO 7816-1

	6GT2600-0AD10
Design, dimensions and weight	
Dimensions (L x W x H)	85.6 x 54 x 0.9 mm
Weight	5 g
Type of mounting	• Fixing pocket • Glued [2]

[1] The values for shock and vibration are maximum values and must not be applied continuously.

[2] The processing instructions of the adhesive manufacturer must be observed.

7.2.5 Dimension drawing

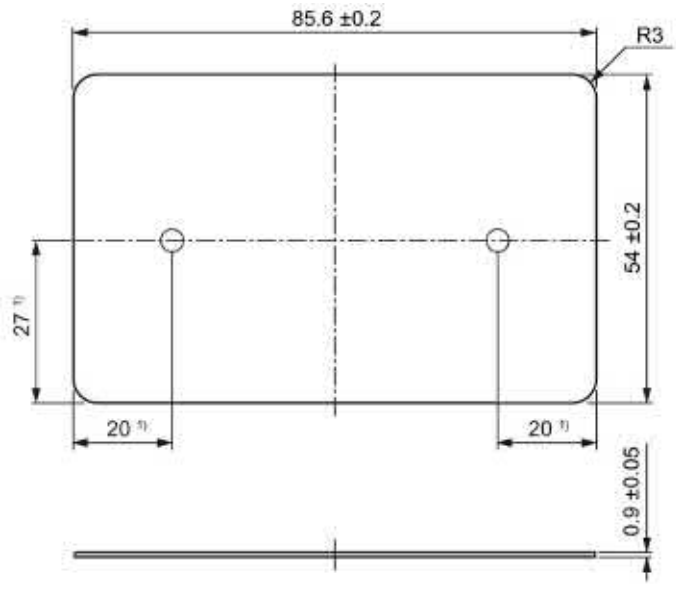

Dimensions in mm

[1] Dimensions for mounting holes

Figure 7-4 MDS D100 dimension drawing

7.3 MDS D117

7.3.1 Features

MDS D117	Characteristics	
	Area of application	Very compact data carrier that can be cemented into objects where precise positioning is necessary; e.g. tool identification, workpiece holders etc..
	Memory size	112 bytes of EEPROM user memory
	Write/read range	See section "Field data (Page 39)."
	Mounting in metal	Yes, flush-mounted in metal
	ISO standard	ISO 15693
	Degree of protection	IP68/IPx9K

7.3.2 Ordering data

Table 7- 4 Ordering data for MDS D117

	Article number
MDS D117 Pack of 10	6GT2600-0AG00

7.3.3 Mounting in metal

Flush-mounted in metal

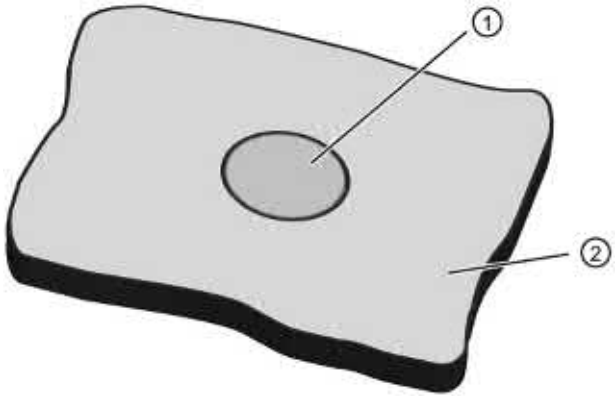

① Transponder
② Metal

7.3.4 Technical specifications

Table 7- 5 Technical specifications for MDS D117

	6GT2600-0AG00
Product type designation	SIMATIC MDS D117
Memory	
Memory configuration	
• UID	• 8 bytes
• User memory	• 112 bytes EEPROM
• OTP memory	• 16 bytes (EEPROM)
Read cycles (at < 40 °C)	> 10^{14}
Write cycles (at < 40 °C)	> 10^{6}
Data retention time (at < 40 °C)	> 10 years
Write/read distance (S_g)	Dependent on the reader used, see section "Field data (Page 39)"
MTBF (Mean Time Between Failures)	228 years
Mechanical specifications	
Enclosure	
• Material	• PPS
• Color	• Black
Recommended distance to metal	≥ 0 mm
Power supply	Inductive, without battery
Permitted ambient conditions	
Ambient temperature	
• during write/read access	• -25 … +85 °C
• outside the read/write field	• -40 … +125 °C
• during storage	• -40 … +125 °C
Degree of protection according to EN 60529	IP68 2 hours, 2 bar, +20 °C
Shock-resistant acc. to EN 60721-3-7, Class 7M2 [1)]	1000 m/s^2
Vibration-resistant acc. to EN 60721-3-7, Class 7M2 [1)]	200 m/s^2
Torsion and bending load	Not permitted

	6GT2600-0AG00
Design, dimensions and weight	
Dimensions (Ø x H)	4 x 5.2 mm
Weight	1 g
Type of mounting	• Fixing pocket • Glued [2]

[1] The values for shock and vibration are maximum values and must not be applied continuously.

[2] The processing instructions of the adhesive manufacturer must be observed.

7.3.5 Dimension drawing

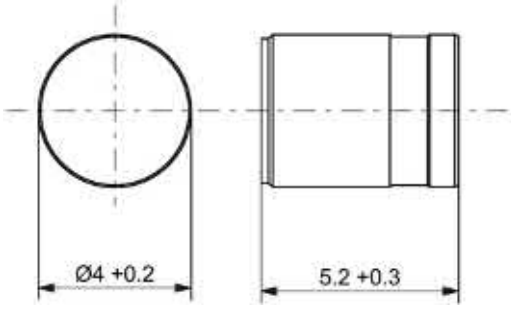

Figure 7-5 Dimensions in mm

7.4 MDS D124

7.4.1 Characteristics

MDS D124	Characteristics	
	Area of application	Application areas in production automation (e.g. small paintshops up to +180 °C)
	Memory size	112 bytes of EEPROM user memory
	Write/read range	See section "Field data (Page 39)".
	Mounting on metal	Yes, with spacer
	ISO standard	ISO 15693
	Degree of protection	IP68/IPx9K

7.4.2 Ordering data

Table 7- 6 Ordering data for MDS D124

	Article number
MDS D124	6GT2600-0AC10

Table 7- 7 Ordering data for MDS D124 accessories

	Article number
Spacer	6GT2690-0AK00

7.4.3 Mounting on metal

Mounting on metal

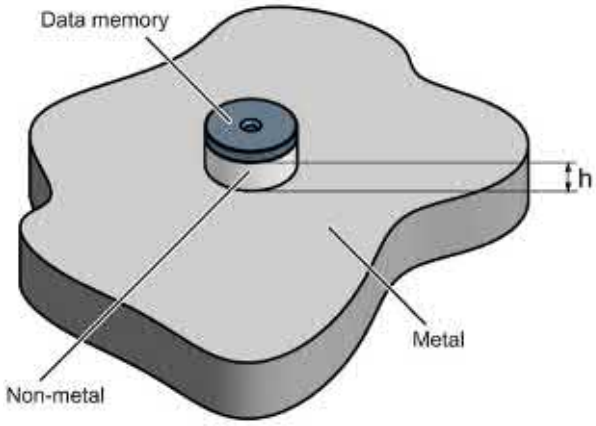

h ≥ 15 mm

Figure 7-6 Mounting the MDS D124/D324/D424/D524/E624 and RF320T on metal with spacer

Flush-mounting

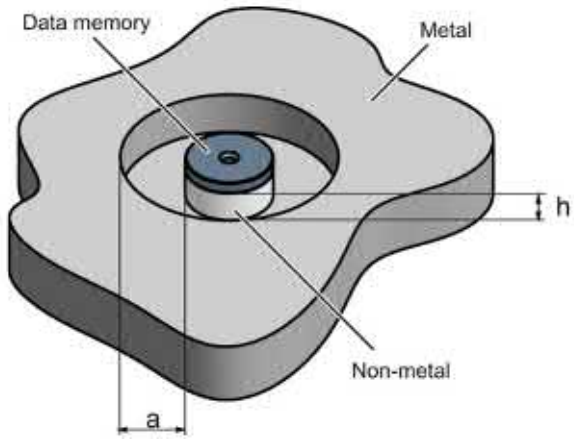

h ≥ 15 mm

a ≥ 25 mm

Figure 7-7 Flush-mounting of the MDS D124/D324/D424/D524/E624 and RF320T in metal with spacer

Note

Going below the distances

If the distances (a and h) are not observed, a reduction of the field data results. It is possible to mount the MDS with metal screws (M3 countersunk head screws). This has no tangible impact on the range.

7.4.4 Technical specifications

Table 7- 8 Technical specifications for MDS D124

	6GT2600-0AC10
Product type designation	SIMATIC MDS D124
Memory	
Memory configuration	
• UID	• 8 bytes
• User memory	• 112 bytes EEPROM
• OTP memory	• 16 bytes (EEPROM)
Read cycles (at < 40 °C)	> 10^{14}
Write cycles (at < 40 °C)	> 10^{6}
Data retention time (at < 40 °C)	> 10 years
Write/read distance (S_g)	Dependent on the reader used, see section "Field data (Page 39)"
MTBF (Mean Time Between Failures)	228 years
Mechanical specifications	
Enclosure	
• Material	• PPS
• Color	• Black
Recommended distance to metal	≥ 15 mm
Power supply	Inductive, without battery

	6GT2600-0AC10
Permitted ambient conditions	
Ambient temperature	
• during write/read access	• -25 … +140 °C
	• from +125 °C: 20% reduction in the limit distance
• outside the read/write field	• -40 … +180 °C
	• at +180 °C: Tested up to 5000 hours or 3000 cycles
• during storage	• -40 … +125 °C
Degree of protection according to EN 60529	• IP68 2 hours, 2 bar, +20 °C • IPx9K steam jet: 150 mm; 10 to 15 l/min; 100 bar; 75 °C
Shock-resistant according to EN 60721-3-7 Class 7M3 [1]	1000 m/s²
Vibration-resistant according to EN 60721-3-7 Class 7M3 [1]	200 m/s²
Torsion and bending load	Not permitted
Design, dimensions and weight	
Dimensions (Ø x H)	27 x 4 x mm
Weight	5 g
Type of mounting	• 1 x M3 screw [2] ≤ 1 Nm • Glued [3] • With spacer

[1] The values for shock and vibration are maximum values and must not be applied continuously.

[2]) To prevent it loosening during operation, secure the screw with screw locking varnish.

[3] The processing instructions of the adhesive manufacturer must be observed.

7.4.5 Using the MDS D124 in hazardous areas

The transponder MDS D124, device group II, category 1G or 1D may be installed and operated in zones 0, 1 and 2 or in the zones 20, 21 and 22.

The following requirements of the 2014/34/EU directive are met:

- EN 60079-0:2012 + A11:2013
- EN 60079-11:2012

When used in hazardous areas, the MDS D124 must not be operated with transmit power greater than 2 W or magnetic field strengths > 5 A/m to avoid impermissible heating. Therefore, the MDS D124 can be operated with the readers RF210R, RF220R, RF240R, RF250R (incl. all released antennas), RF260R, RF310R, RF340R, RF350R and RF380R. The MDS D124 transponder is not released for operation with the RF290R reader.

Labeling and warning information

Since neither the Ex marking nor the safety marking can be applied to the MDS D124 for space reasons, these are supplied on a label. This must be affixed immediately next to the MDS D124 so that the label clearly relates to the device. The identification of the electrical equipment as an enclosed unit is:

Figure 7-8 Identification label of MDS D124

[[Serial Number]]	Serial number of the transponder The serial number is structured as follows: LB[A][B][CDEFGH]
LB	Code of manufacturing factory see below
[A]	Year produced
[B]	Month produced
[CDEFGH]	Consecutive number = 000001…999999

WARNING

Installation and operating conditions for hazardous areas

- The device may not be used in areas influenced by processes that generate high electrostatic charges.
- The device must be installed in such a way that it is mechanically protected.
- The device must be mounted on a grounded conductive base.
- The device must only be cleaned with a damp cloth.
- The device is suitable for use in atmospheres containing dust, but not for full immersion in dust.

Electrical data

Table 7- 9 Energy supply of the transponder (antenna field of the reader)

Date	Value
Operating frequency	13.56 MHz
Transmit power (P_{max})	2 W
Magnetic field strength (H_{max})	5 A/m

Thermal specifications

The temperature class of the MDS D124 transponder for hazardous areas for gases depends on the ambient temperature range:

Table 7- 10 Temperature classes for hazardous areas for gases

Ambient temperature of the transponder		Temperature class
RF210R, RF220R, RF240R, RF250R (incl. all released antennas), RF260R, RF310R, RF340R, RF350R	RF380R	
-25 °C ... +175 °C	-25 °C ... +130 °C	T3
-25 °C ... +110 °C	-25 °C ... +65 °C	T4
-25 °C ... +75 °C	-25 °C ... +30 °C	T5
-25 °C ... +60 °C	--	T6

The surface temperature of the MDS D124 transponder for hazardous areas for dust depends on the ambient temperature range:

Table 7- 11 Temperature classes for hazardous areas for dust

Ambient temperature of the transponder		Permitted surface temperature
RF210R, RF220R, RF240R, RF250R (incl. all released antennas), RF260R, RF310R, RF340R, RF350R	RF380R	
-25 °C ... +155 °C	-25 °C ... +110 °C	T180 °C
-25 °C ... +105 °C	-25 °C ... +60 °C	T130 °C
-25 °C ... +80 °C	--	T95 °C
-25 °C ... +55 °C	--	T80 °C

7.4.6 EC declaration of conformity according to directive 2014/34/EU MDS D124

The EC type-examination certificate for the MDS D124 transponder was substantiated by TÜV 12 ATEX 084413 X. Based on this certificate, the CE declaration was made by the manufacturer according to directive 2014/34/EU.

The manufacturing plant of the MDS D124 has an ATEX quality assurance system recognized by DEKRA EXAM GmbH with notification number "BVS 11 ATEX ZQS/E111".

Manufacturer's address - distributor
Siemens AG
DE – 76181 Karlsruhe, Germany

Manufacturer's address - factory
Siemens AG
Würzburger Str. 121
DE - 90766 Fürth, Germany

7.4.7 Dimension drawing

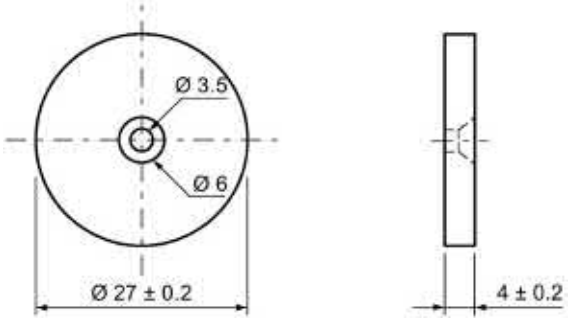

Figure 7-9 Dimension drawing of MDS D124

All dimensions in mm

7.5 MDS D126

7.5.1 Characteristics

MDS D126	Characteristics	
	Area of application	Compact and rugged ISO transponder; suitable for identification of transport units in production-related logistics; can also be deployed in harsh conditions
	Memory size	112 bytes of EEPROM user memory
	Write/read range	See section Field data (Page 39)
	Mounting on metal	Yes, with spacer
	ISO standard	ISO-15693
	Degree of protection	IP68

7.5.2 Ordering data

Table 7- 12 Ordering data for MDS D126

	Article number
MDS D126	6GT2600-0AE00

Table 7- 13 Ordering data for MDS D126 accessories

	Article number
Spacer	6GT2690-0AL00

7.5.3 Mounting on metal

Mounting on metal

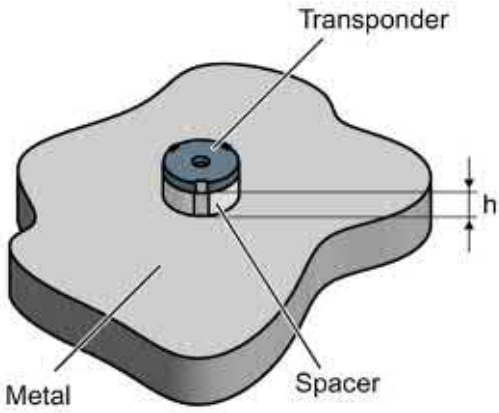

h ≥ 25 mm

Figure 7-10 Mounting the MDS D126 / D426 / D526 on metal with spacer

Flush-mounted in metal

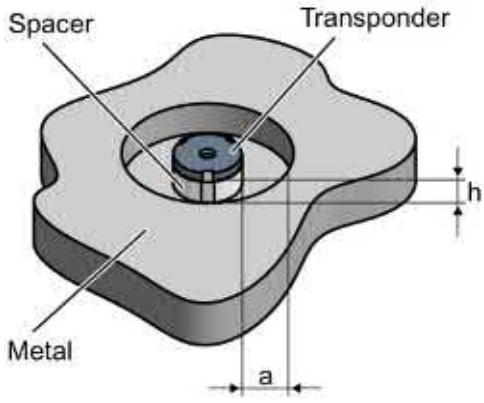

h ≥ 25 mm

a ≥ 50 mm

Figure 7-11 Flush installation of the MDS D126 / D426 / D526 in metal with spacer

7.5.4 Technical specifications

Table 7- 14 Technical specifications for the MDS D126

	6GT2600-0AE00
Product type designation	SIMATIC MDS D126
Memory	
Memory configuration	
• UID	• 8 bytes
• User memory	• 112 bytes EEPROM
• OTP memory	• 16 bytes (EEPROM)
Read cycles (at < 40 °C)	> 10^{14}
Write cycles (at < 40 °C)	> 10^{6}
Data retention time (at < 40 °C)	> 10 years
Write/read distance (S_g)	Dependent on the reader used, see section "Field data (Page 39)"
MTBF (Mean Time Between Failures)	228 years
Mechanical specifications	
Enclosure	
• Material	• PA6.6 GF
• Color	• Black
Recommended distance to metal	≥ 25 mm
Power supply	Inductive, without battery
Permitted ambient conditions	
Ambient temperature	
• during write/read access	• -25 … +85 °C
• outside the read/write field	• -40 … +100 °C
• during storage	• -40 … +100 °C
Degree of protection according to EN 60529	IP68 2 hours, 2 bar, +20 °C
Shock-resistant acc. to EN 60721-3-7, Class 7M2 [1)]	500 m/s^2
Vibration-resistant acc. to EN 60721-3-7, Class 7M2 [1)]	200 m/s^2
Torsion and bending load	Not permitted

	6GT2600-0AE00
Design, dimensions and weight	
Dimensions (Ø x H)	50 x 3.6 mm
Weight	13 g
Type of mounting	• 1 x M4 screw [2)] ≤ 1 Nm • Glued [3)]

[1)] The values for shock and vibration are maximum values and must not be applied continuously.

[2]) To prevent it loosening during operation, secure the screw with screw locking varnish.

[3)] The processing instructions of the adhesive manufacturer must be observed.

7.5.5 Dimension drawing

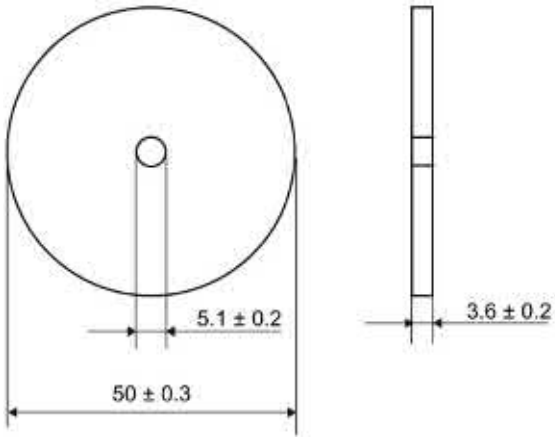

Dimensions in mm

Figure 7-12 Dimension drawing of MDS D126

7.6 MDS D127

7.6.1 Features

MDS D127	Characteristics	
	Area of application	Very compact data carrier that can be screwed into areas where precise positioning is necessary; e.g. tool identification, workpiece holders etc.
	Memory size	112 bytes of EEPROM user memory
	Write/read range	See section "Field data (Page 39)"
	Mounting on metal	Yes, flush-mounted in metal
	ISO standard	ISO 15693
	Degree of protection	IP68/IPx9K

7.6.2 Ordering data

Table 7- 15 Ordering data for MDS D127

	Article number
MDS D127 Pack of 10 (A screw-in aid is supplied with each pack)	6GT2600-0AF00

7.6.3 Mounting in metal

Flush-mounted in metal

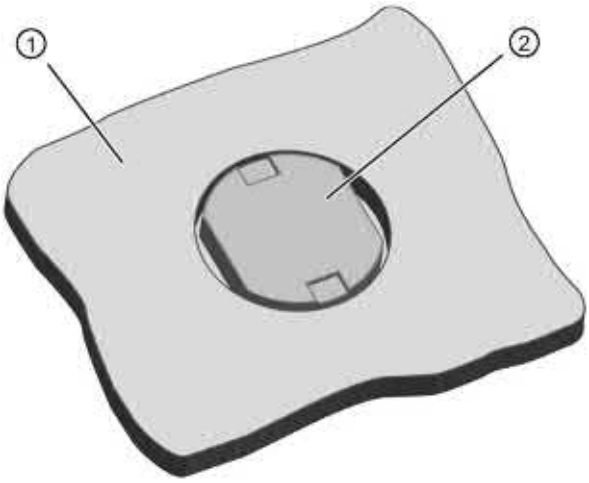

① Metal
② Transponders

Note

Damage to the transponder due to improper mounting

To screw the MDS D127 into a suitable thread, use the supplied screw-in tool. This avoids damage to the MDS D127.

Figure 7-13 Screw-in aid for mounting the MDS D127

7.6.4 Technical specifications

Table 7- 16 Technical specifications for MDS D127

	6GT2600-0AF00
Product type designation	SIMATIC MDS D127
Memory	
Memory configuration	
• UID	• 8 bytes
• User memory	• 112 bytes EEPROM
• OTP memory	• 16 bytes (EEPROM)
Read cycles (at < 40 °C)	> 10^{14}
Write cycles (at < 40 °C)	> 10^{6}
Data retention time (at < 40 °C)	> 10 years
Write/read distance (S_g)	Dependent on the reader used, see section "Field data (Page 39)"
MTBF (Mean Time Between Failures)	228 years
Mechanical specifications	
Enclosure	
• Material	• PA6
• Color	• Black
Recommended distance to metal	≥ 0 mm
Power supply	Inductive, without battery
Permitted ambient conditions	
Ambient temperature	
• during write/read access	• -25 … +100 °C
• outside the read/write field	• -40 … +125 °C
• during storage	• -40 … +125 °C
Degree of protection according to EN 60529	• IP68 2 hours, 2 bar, +20 °C • IPx9K steam jet: 150 mm; 10 to 15 l/min; 100 bar; 75 °C
Shock-resistant acc. to EN 60721-3-7, Class 7M2 [1)]	1000 m/s²
Vibration-resistant acc. to EN 60721-3-7, Class 7M2 [1)]	200 m/s²
Torsion and bending load	Not permitted

	6GT2600-0AF00
Design, dimensions and weight	
Dimensions (Ø x H)	M6 x 5.8 mm
Weight	1 g
Type of mounting	• Glued [2] • 1 x M3 screw

[1] The values for shock and vibration are maximum values and must not be applied continuously.

[2] The processing instructions of the adhesive manufacturer must be observed.

7.6.5 Dimension drawing

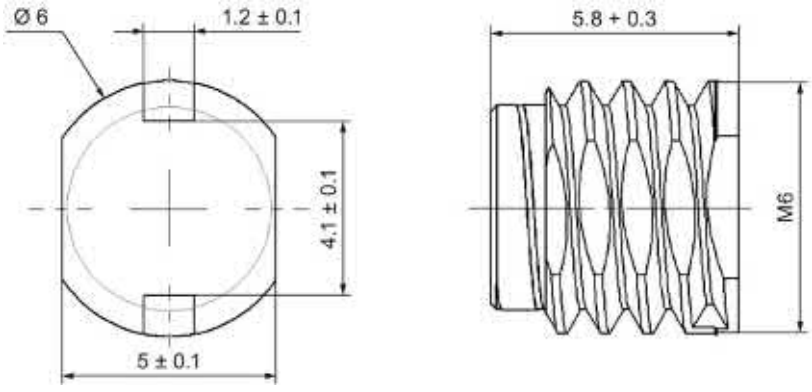

Figure 7-14 Dimensions in mm

7.7 MDS D139

7.7.1 Characteristics

MDS D139	Characteristics	
	Area of application	Applications in production logistics and in assembly lines subject to high temperatures (up to +220 °C) Typical application areas: • Paintshops and their preparatory treatments) • Primer coat, electrolytic dip area, cataphoresis with the associated drying furnaces • Top coat area with drying furnaces • Washing areas at temperatures > 85 °C • Other applications with higher temperatures
	Memory size	112 bytes of EEPROM user memory
	Write/read range	See section Field data (Page 39).
	Mounting on metal	Yes, with spacer
	ISO standard	ISO 15693
	Degree of protection	IP68/IPx9K

7.7.2 Ordering data

Table 7- 17 Ordering data for MDS D139

	Article number
MDS D139	6GT2600-0AA10

Table 7- 18 Ordering data for MDS D139 accessory

	Article number
Spacer	6GT2690-0AA00
Quick change holder (Ø x H): 22 x 60 mm	6GT2690-0AH00
Quick change holder (Ø x H): 22 x 47 mm	6GT2690-0AH10

7.7.3 Metal-free area

Direct mounting of the MDS D139 on metal is not allowed. A distance of ≥ 30 mm is recommended. This can be achieved using spacers (see "Transponder holders (Page 433)").

Mounting on metal

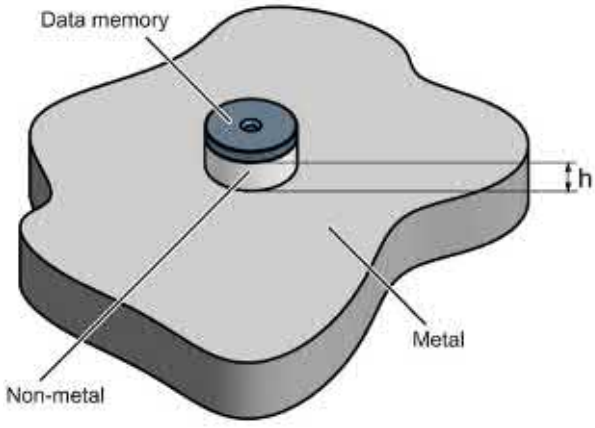

h ≥ 30 mm

Figure 7-15 Mounting the MDS D139 on metal with spacer

Flush-mounting

It is possible to mount the MDS D139 in metal. With large antennas, for example ANT D5, this leads to a reduction of ranges.

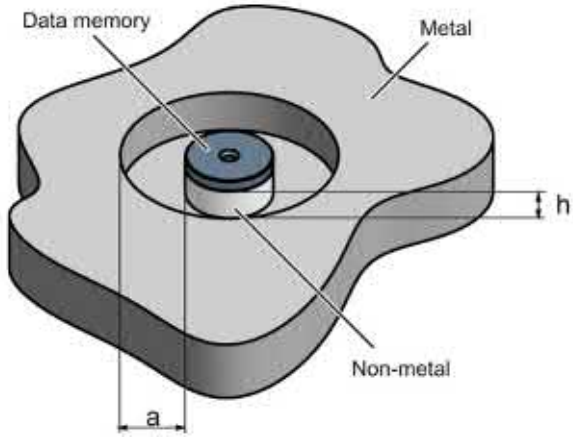

h ≥ 30 mm

a ≥ 100 mm

Figure 7-16 Flush-mounting of the MDS D139 in metal with spacer

Note

Going below the distances

If the distances (a and h) are not observed, a reduction of the field data results. It is possible to mount the MDS with metal screws (M5). This has no tangible impact on the range. It is recommended that a test is performed in critical applications.

7.7.4 Mounting in metal

It is possible to mount the MDS D139 in metal. With large antennas, for example ANT D5, this leads to a reduction of ranges.

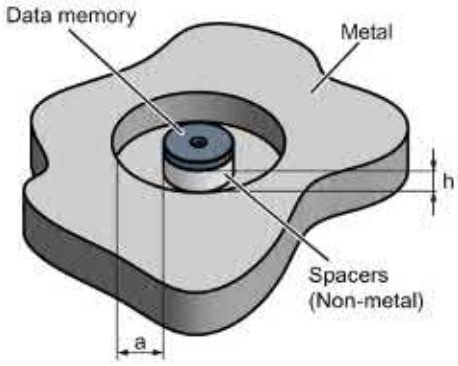

a = 100 mm

h = 30 mm

Figure 7-17 MDS D139: Mounting in metal

7.7.5 Cleaning the transponder

NOTICE

Cleaning the transponder

Do not clean the transponder with mechanical tools, sand-blasting or pressure hose. These cleaning methods result in damage to the transponder.

Clean the transponder only with the chemical cleansing agents listed in the section Chemical resistance of the reader and transponders (Page 106).

7.7.6 Technical specifications

Table 7- 19 Technical specifications for MDS D139

	6GT2600-0AA10
Product type designation	SIMATIC MDS D139
Memory	
Memory configuration	
• UID	• 8 bytes
• User memory	• 112 bytes EEPROM
• OTP memory	• 16 bytes (EEPROM)
Read cycles (at < 40 °C)	> 10^{14}
Write cycles (at < 40 °C)	> 10^{6}
Data retention time (at < 40 °C)	> 10 years
Write/read distance (S_g)	Dependent on the reader used, see section "Field data (Page 39)"
MTBF (Mean Time Between Failures)	228 years
Mechanical specifications	
Enclosure	
• Material	• PPS
• Color	• Black
Recommended distance to metal	≥ 30 mm
Power supply	Inductive, without battery

	6GT2600-0AA10
Permitted ambient conditions	
Ambient temperature	
• during write/read access	• -25 … +140 °C
	• from +125 °C: 20% reduction in the limit distance
• outside the read/write field	• -40 … +220 °C
	• at +200 °C: Tested up to 5000 hours or 6000 cycles
	• at +220 °C: Tested up to 2000 hours or 2000 cycles
• during storage	• -40 … +100 °C
Degree of protection according to EN 60529	• IP68 2 hours, 2 bar, +20 °C • IPx9K steam jet: 150 mm; 10 to 15 l/min; 100 bar; 75 °C
Shock-resistant acc. to EN 60721-3-7, Class 7M2 [1]	500 m/s^2
Vibration-resistant acc. to EN 60721-3-7, Class 7M2 [1]	200 m/s^2
Torsion and bending load	Not permitted

Design, dimensions and weight	
Dimensions (Ø x H)	85 x 15 mm
Weight	50 g
Type of mounting	1 x M5 screw [2] 1.5 Nm

1 The values for shock and vibration are maximum values and must not be applied continuously. A combination of high application temperatures together with high shock or vibration values is not possible.

2) For mounting with the spacer (6GT2690-0AA00), use a stainless steel M5 screw to avoid damaging the MDS in high temperatures (expansion coefficient).

7.7.7 Using the MDS D139 in hazardous areas

The MDS D139 transponder is classed as simple, electrical equipment and can be operated in Protection Zone 2, Device Group II, Category 3G.

The following requirements of the 94/9/EC directive are met:

- EN 60079-0:2006
- EN 60079-15:2005
- EN 61241-0:2006
- EN 61241-1:2004

Identification

II 3 G Ex nA II T2

II 3 D Ex tD A22 IP68 T 220°C

KEMA 09 ATEX 0133 X

Ta: -25 ... +220°C

WARNING
Gefahr durch elektrostatische Entladungen Potential electrostatic charging hazard Danger potentiel de charges électrostatiques

Note

Installations- und Betriebsbedingungen für den explosionsgefährdeten Bereich:

a) Der Einsatz des Gerätes in der Nähe von stark ladungserzeugenden Prozessen ist untersagt.

b) Das Gerät ist mechanisch geschützt zu montieren.

c) Die Montage muss auf einem geerdeten, leitenden Untergrund erfolgen.

d) Die Reinigung darf nur mit feuchtem Tuch erfolgen.

Installation and operating conditions for hazardous areas:

a) Use of the equipment in the vicinity of processes generating high charges is not allowed.

b) The equipment must be mechanically protected when installed.

c) Installation must be performed on a grounded and conductive mounting surface.

d) Cleaning only with a wet cloth

Conditions d'installation et de mise en oeuvre pour la zone de protection Ex :

a) L'utilisation de l'appareil près de processus générant de fortes charges est interdite.

b) L'appareil doit être monté de manière à être protégé mécaniquement.

c) Le montage doit être effectué sur un socle conducteur mis à la terre.

d) Nettoyage uniquement avec un chiffon humide

7.7.8 Dimension drawings

Dimensional drawing of MDS D139

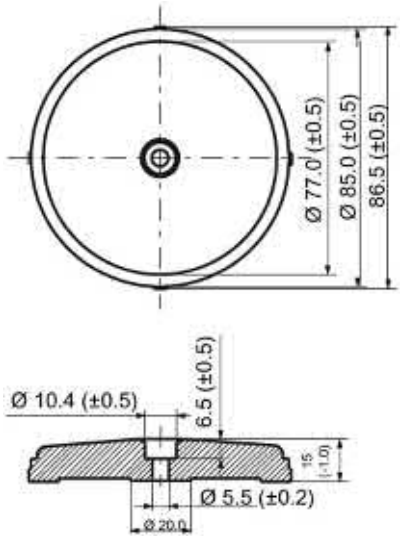

Figure 7-18 Dimensional drawing of MDS D139

Dimensions in mm

7.8 MDS D160

7.8.1 Characteristics

MDS D160	Characteristics	
	Area of application	Thanks to its rugged packaging, the MDS D160 is a transponder that can be used under extreme environmental conditions. It is washable, heat-resistant and resistant to all chemicals generally used in the laundry process. Typical applications are, for example: • Rented work clothing • Hotel laundry • Surgical textiles • Hospital clothing • Dirt collection mats • Clothing for nursing homes/hostels
	Memory size	112 bytes of EEPROM user memory
	Write/read range	See section Field data (Page 39).
	Mounting on metal	Yes, with spacer
	ISO standard	ISO 15693
	Degree of protection	IP68/IPx9K

7.8.2 Ordering data

Table 7- 20 Ordering data for MDS D160

	Article number
MDS D160	6GT2600-0AB10

Table 7- 21 Ordering data for MDS D160 accessories

	Article number
Spacer	6GT2690-0AG00
Corner mounting bracket	6GT2690-0AN00

7.8.3 Mounting on metal

Mounting on metal

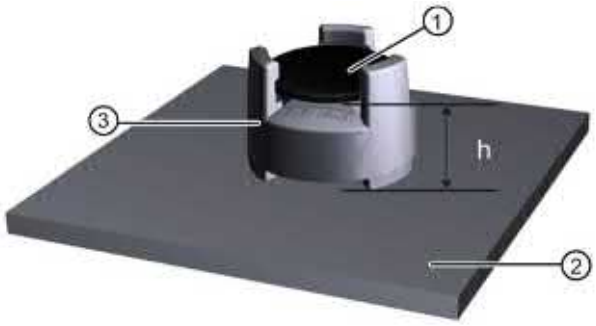

① Transponder
② Metal carrier
③ Spacer
h ≥ 10 mm

Figure 7-19 Mounting the MDS D160 on metal with spacer

Note
Going below the minimum distance (h)

If the minimum distance (h) is not observed, a reduction of the field data results.
In critical applications, it is recommended that a test is performed.

Flush-mounting

Flush-mounting of the MDS D160 in metal is not permitted!

7.8.4 Technical specifications

Table 7- 22 Technical specifications for the MDS D160

	6GT2600-0AB10
Product type designation	SIMATIC MDS D160
Memory	
Memory configuration	
• UID	• 8 bytes
• User memory	• 112 bytes EEPROM
• OTP memory	• 16 bytes (EEPROM)
Read cycles (at < 40 °C)	> 10^{14}
Write cycles (at < 40 °C)	> 10^{6}
Data retention time (at < 40 °C)	> 10 years
Write/read distance (S_g)	Dependent on the reader used, see section "Field data (Page 39)"
MTBF (Mean Time Between Failures)	228 years
Mechanical specifications	
Enclosure	
• Material	• PPS
• Color	• beige
Recommended distance to metal	≥ 10 mm
Power supply	Inductive, without battery

	6GT2600-0AB10
Permitted ambient conditions	
Ambient temperature	
• during write/read access	• -25 ... +85 °C
• outside the read/write field	• -40 … +175 °C
	• from +125 °C: for 1000 hours, 20% reduction of the limit distance
	• at +175 °C: 100 washing cycles tested
	• at +220 °C: Tested once for up to 30 seconds
• during storage	• -25 … +100 °C
Mechanical strength	
• Isostatic pressure	• 300 bar for 5 min
• Axial pressure	• 1000 N for 10 s
• Radial pressure	• 1000 N for 10 s
Resistance to chemicals	All chemicals normally used in the washing process
Service life	At least 100 wash cycles
Degree of protection	• IP68 24 hours, 2 bar, +20 °C • IPx9K
Shock-resistant according to IEC 68-2-27 1)	400 m/s^2 18 ms; 6 axes; 2000 repetitions/h
Vibration-resistant according to IEC 68-2-6 1)	100 m/s^2 10 ... 2000 Hz; 3 axes; 2.5 h
Torsion and bending load	Not permitted

	6GT2600-0AB10
Design, dimensions and weight	
Dimensions (Ø x H)	16 x 3 mm
Weight	1.2 g
Type of mounting	• Patched • Sewn in • Glued [2]

[1] The values for shock and vibration are maximum values and must not be applied continuously.

[2] The processing instructions of the adhesive manufacturer must be observed.

Note

Regeneration time between washing cycles

The regeneration time for the MDS D160 between washing cycles must be at least 24 hours.

7.8.5 Dimension drawings

Dimensional drawing of MDS D160

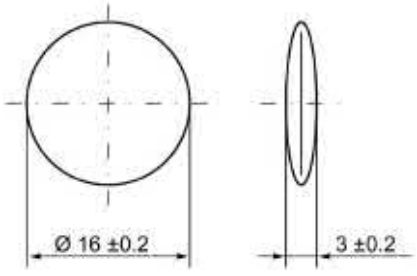

Dimensions in mm

Figure 7-20 Dimensional drawing of MDS D160

7.9 MDS D165

7.9.1 Features

MDS D165 (special version)	Characteristics	
	Area of application	The design of the transponder (self-adhesive label) permits a variety of designs, guaranteeing optimum dimensioning for the widest variety of applications. From simple identification such as electronic barcode replacement/supplementation, through warehouse and distribution logistics, right up to product identification.
	Memory size	112 bytes of EEPROM user memory
	Write/read range	See section Field data (Page 39).
	Mounting on metal	Yes, with spacer
	ISO standard	ISO 15693
	Degree of protection	IP65

7.9.2 Ordering data

Table 7- 23 Ordering data for MDS D165

	Article number
MDS D165 (special version ISO-CARD)	6GT2600-1AB00-0AX0

Type of delivery

Minimum order quantity: 1250 units (5 rolls with 250 units each)

7.9.3 Technical data

Table 7- 24 Technical specifications for MDS D165

	6GT2600-1AB00-0AX0
Product type designation	SIMATIC MDS D165
Memory	
Memory configuration	
• UID	• 8 bytes
• User memory	• 112 bytes EEPROM
• OTP memory	• 16 bytes (EEPROM)
Read cycles (at < 40 °C)	> 10^{14}
Write cycles (at < 40 °C)	> 10^{6}
Data retention time (at < 40 °C)	> 10 years
Write/read distance (S_g)	Dependent on the reader used, see section "Field data (Page 39)"
MTBF (Mean Time Between Failures)	228 years
Mechanical specifications	
Enclosure	
• Material	• Top: PET (label material) • Inlay: PET (carrier material) • Antenna: Aluminum • Bottom: Double-sided transfer adhesive on silicon paper
• Color	• White
Recommended distance to metal	≥ 25 mm
Power supply	Inductive, without battery
Permitted ambient conditions	
Ambient temperature	
• during write/read access	• -25 ... +80 °C
• outside the read/write field	• -25 … +80 °C
• during storage	• +20 to +30 °C Can be stored for 2 years, determined by the durability of the adhesive.
Degree of protection	IP65

	6GT2600-1AB00-0AX0
Design, dimensions and weight	
Dimensions (L x W x H)	86 x 54 x 0.3 mm
Weight	1 g
Type of mounting	Glued with self-adhesive label [1]

[1] The processing instructions of the adhesive manufacturer must be observed.

7.9.4 Dimension drawing

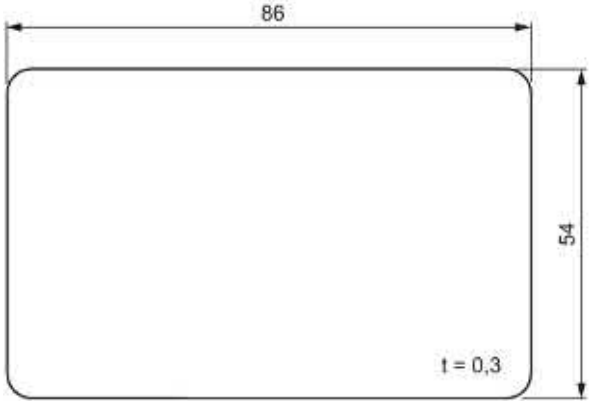

Dimensions in mm

Figure 7-21 Dimension drawing of MDS D165

7.10 MDS D200

7.10.1 Features

MDS D200	Characteristics	
	Area of application	From simple identification such as electronic barcode replacement/supplementation, through warehouse and distribution logistics, right up to product identification.
	Memory size	256 bytes of EEPROM user memory
	Write/read range	See section Field data (Page 39).
	Mounting on metal	Yes, with spacer
	ISO standard	15693 with Tag-it HFI technology
	Degree of protection	IP67

7.10.2 Ordering data

Table 7- 25 Ordering data for MDS D200

	Article number
MDS D200 (special version ISO-CARD)	6GT2600-1AD00-0AX0

Table 7- 26 Ordering data for MDS D200 accessories

	Article number
Spacer (in conjunction with fixing pocket 6GT2190-0AB00)	6GT2190-0AA00
Fixing pocket (in conjunction with spacer 6GT2190-0AA00)	6GT2190-0AB00
Fixing pocket (not suitable for fixing directly onto metal)	6GT2390-0AA00

7.10.3 Mounting on metal

Mounting on metal

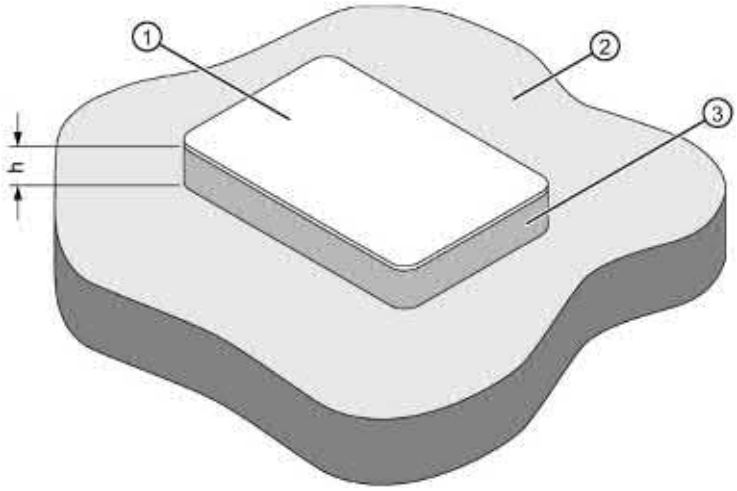

h ≥ 20 mm
① Transponder
② Metal
③ Non-metal

Figure 7-22 Mounting of the MDS D200 on metal with spacer

Flush-mounting

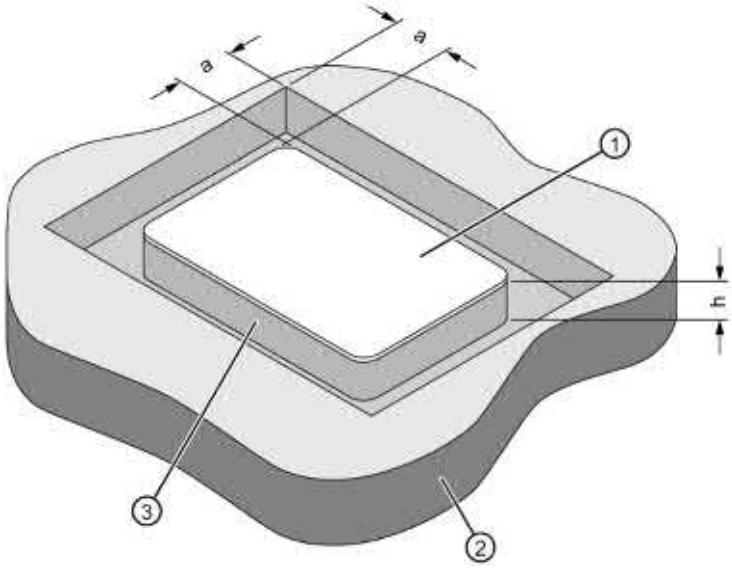

a ≥ 20 mm
h ≥ 20 mm
① Transponder
② Metal
③ Non-metal

Figure 7-23 Flush-mounting of MDS D200 in metal with spacer

Note

If the minimum guide values (h) are not observed, a reduction of the field data results.

7.10.4 Technical data

Table 7- 27 Technical specifications for MDS D200

	6GT2600-1AD00-0AX0
Product type designation	SIMATIC MDS D200
Memory	
Memory configuration	
• UID	• 8 bytes
• User memory	• 256 bytes EEPROM
• OTP memory	• 16 bytes (EEPROM)
Read cycles (at < 25 °C)	> 10^{14}
Write cycles (at < 25 °C)	> 10^{6}
Data retention time (at < 25 °C)	> 10 years
Write/read distance (S_g)	Dependent on the reader used, see section "Field data (Page 39)"
MTBF (Mean Time Between Failures)	228 years
Mechanical specifications	
Enclosure	
• Material	• PET
• Color	• White
Recommended distance to metal	≥ 20 mm
Power supply	Inductive, without battery
Permitted ambient conditions	
Ambient temperature	
• during write/read access	• -20 … +60 °C
• outside the read/write field	• -20 … +60 °C
• during storage	• -20 … +60 °C
Degree of protection according to EN 60529	IP67
Shock-resistant acc. to EN 60721-3-7, Class 7M2	ISO 10373 / ISO 7810 1)
Vibration-resistant according to EN 60721-3-7 Class 7M2	ISO 10373 / ISO 7810 1)
Torsion and bending load	ISO 10373 / ISO 7816-1

	6GT2600-1AD00-0AX0
Design, dimensions and weight	
Dimensions (L x W x H)	85 x 54 x 0.8 mm
Weight	5 g
Type of mounting	• Fixing pocket • Glued [2]

[1] The values for shock and vibration are maximum values and must not be applied continuously.

[2] The processing instructions of the adhesive manufacturer must be observed.

7.10.5 Dimension drawing

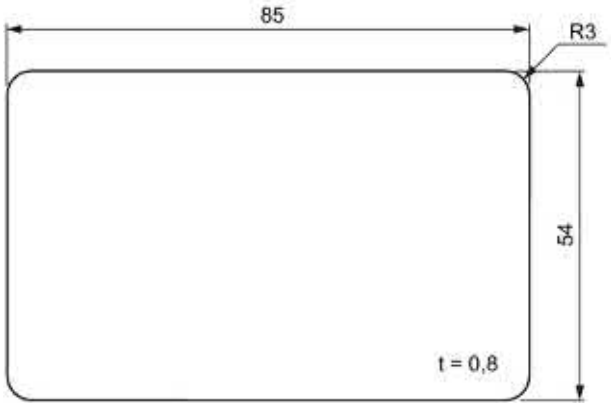

Dimensions in mm

Figure 7-24 Dimension drawing of MDS D200

7.11 MDS D261

7.11.1 Features

MDS D261	Characteristics	
	Area of application	The design of the transponder (self-adhesive label) permits a variety of designs, guaranteeing optimum dimensioning for the widest variety of applications. From simple identification such as electronic barcode replacement/supplementation, through warehouse and distribution logistics, right up to product identification.
	Memory size	256 bytes of EEPROM user memory
	Write/read range	See section Field data (Page 39).
	Mounting on metal	Yes, with spacer
	ISO standard	ISO 15693
	Degree of protection	IP65

7.11.2 Ordering data

Table 7- 28 Ordering data for MDS D261

	Article number
MDS D261	6GT2600-1AA00-0AX0

Type of delivery

Minimum order quantity: 1250 units (5 rolls with 250 units each)

7.11.3 Technical data

Table 7- 29 Technical specifications of MDS D261

	6GT2600-1AA01-0AX0
Product type designation	SIMATIC MDS D261
Memory	
Memory configuration	
• UID	• 8 bytes
• User memory	• 256 bytes EEPROM
• OTP memory	• 16 bytes (EEPROM)
Read cycles (at < 40 °C)	> 10^{14}
Write cycles (at < 40 °C)	> 10^{6}
Data retention time (at < 40 °C)	> 10 years
Write/read distance (S_g)	Dependent on the reader used, see section "Field data (Page 39)"
MTBF (Mean Time Between Failures)	228 years
Mechanical specifications	
Enclosure	
• Material	• Top: PET (label material)
	• Inlay: PET (carrier material)
	• Antenna: Aluminum
	• Bottom: Double-sided transfer adhesive on silicon paper
• Color	• White
Recommended distance to metal	≥ 25 mm
Power supply	Inductive, without battery
Permitted ambient conditions	
Ambient temperature	
• during write/read access	• -20 ... +60 °C
• outside the read/write field	• -20 … +85 °C
• During transportation and storage	• +20 to +30 °C Can be stored for 2 years, determined by the durability of the adhesive
Degree of protection	IP65

	6GT2600-1AA01-0AX0
Design, dimensions and weight	
Dimensions (L x W x H)	55 x 55 x 0.3 mm
Weight	1 g
Type of mounting	Glued with self-adhesive label [1]

[1] The processing instructions of the adhesive manufacturer must be observed.

7.11.4 Dimension drawing

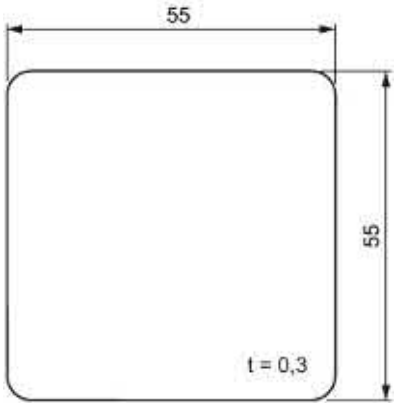

Dimensions in mm

Figure 7-25 Dimension drawing of MDS D261

7.12 MDS D324

7.12.1 Characteristics

MDS D324	Characteristics	
	Area of application	Production and distribution logistics and product identification Can also be used in harsh environments under extreme environmental conditions (e.g. with higher temperature load).
	Memory size	992 bytes of EEPROM user memory
	Write/read range	See section "Field data (Page 39)."
	Mounting on metal	Yes, with spacer
	ISO standard	ISO 15693
	Degree of protection	IP67; IPx9K

7.12.2 Ordering data

Table 7- 30 Ordering data MDS D324

	Article number
MDS D324	6GT2600-3AC00

Table 7- 31 Ordering data MDS D324 accessories

	Article number
Spacer	6GT2690-0AK00

7.12.3 Mounting on metal

Mounting on metal

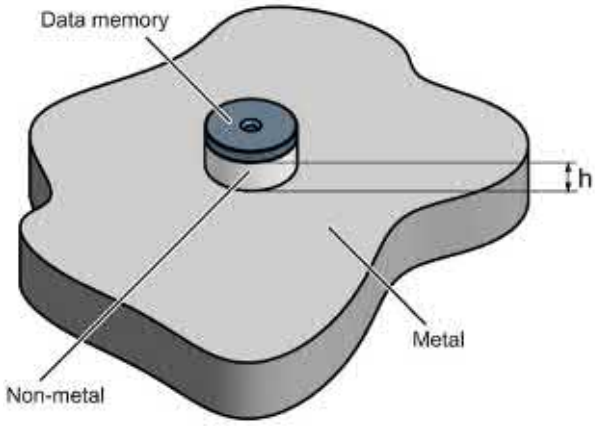

h ≥ 15 mm

Figure 7-26 Mounting the MDS D124/D324/D424/D524/E624 and RF320T on metal with spacer

Flush-mounting

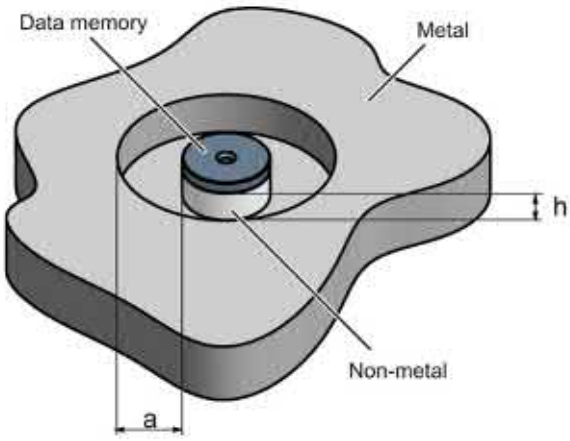

h ≥ 15 mm

a ≥ 25 mm

Figure 7-27 Flush-mounting of the MDS D124/D324/D424/D524/E624 and RF320T in metal with spacer

Note

Going below the distances

If the distances (a and h) are not observed, a reduction of the field data results. It is possible to mount the MDS with metal screws (M3 countersunk head screws). This has no tangible impact on the range.

7.12.4 Technical specifications

Table 7- 32 Technical specifications of MDS D324

	6GT2600-3AC00
Product type designation	SIMATIC MDS D324
Memory	
Memory configuration	
• UID	• 8 bytes
• User memory	• 992 bytes EEPROM
• OTP memory	• 16 bytes (EEPROM)
Read cycles (at < 40 °C)	> 10^{14}
Write cycles (at < 40 °C)	> 10^{6}
Data retention time (at < 40 °C)	> 10 years
Write/read distance (S_g)	Dependent on the reader used, see section "Field data (Page 39)"
MTBF (Mean Time Between Failures)	228 years
Mechanical specifications	
Enclosure	
• Material	• Epoxy resin
• Color	• Black
Recommended distance to metal	≥ 15 mm
Power supply	Inductive, without battery

	6GT2600-3AC00
Permitted ambient conditions	
Ambient temperature	
• during write/read access	• -25 … +125 °C
• outside the read/write field	• -40 … +140 °C
• during storage	• -40 … +140 °C
Degree of protection according to EN 60529	• IP67 • IPx9K
Shock-resistant according to EN 60721-3-7 Class 7M3 [1]	1000 m/s²
Vibration-resistant according to EN 60721-3-7 Class 7M3 [1]	200 m/s²
Torsion and bending load	Not permitted
Design, dimensions and weight	
Dimensions (Ø x H)	27 x 4 mm
Weight	5 g
Type of mounting	• 1 x M3 screw [2] ≤ 1 Nm • Glued [3]

[1] The values for shock and vibration are maximum values and must not be applied continuously.

[2]) To prevent it loosening during operation, secure the screw with screw locking varnish.

[3] The processing instructions of the adhesive manufacturer must be observed.

7.12.5 Dimension drawing

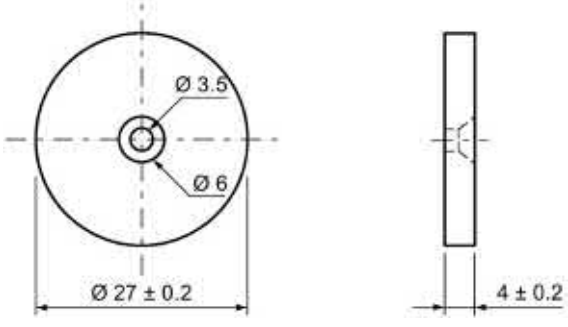

Figure 7-28 Dimension drawing of MDS D324

All dimensions in mm

7.13 MDS D339

7.13.1 Characteristics

MDS D339	Characteristics	
	Area of application	Applications in production automation with high temperature demands (up to +220 °C) Typical application areas: • Paintshops and their preparatory treatments • Primer coat, electrolytic dip area, cataphoresis with the associated drying furnaces • Top coat area with drying furnaces • Washing areas at temperatures > 85 °C • Other applications with higher temperatures
	Memory size	992 bytes of EEPROM user memory
	Write/read range	See section Field data (Page 39).
	Mounting on metal	Yes, with spacer
	ISO standard	ISO 15693
	Degree of protection	IP68/IPx9K

7.13.2 Ordering data

Table 7- 33 Ordering data for MDS D339

	Article number
MDS D339	6GT2600-3AA10

Table 7- 34 Ordering data for MDS D339 accessories

	Article number
Spacer	6GT2690-0AA00
Quick change holder (Ø x H): 22 x 60 mm	6GT2690-0AH00
Quick change holder (Ø x H): 22 x 47 mm	6GT2690-0AH10

7.13.3 Mounting on metal

Direct mounting of the MDS D139/D339 on metal is not allowed. A distance of ≥ 30 mm is recommended. This can be achieved using spacers (see "Transponder holders (Page 433)").

Mounting on metal

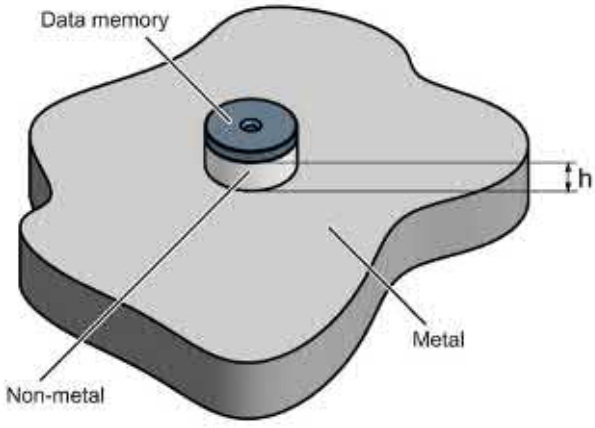

h ≥ 30 mm

Figure 7-29 Mounting the MDS D139/D339 on metal with spacer

Flush-mounting

It is possible to mount the MDS D139/D339 in metal. With large antennas, for example ANT D5, this leads to a reduction of ranges.

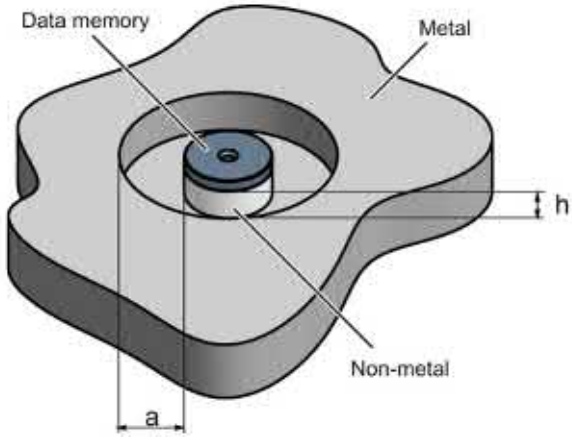

h ≥ 30 mm

a ≥ 100 mm

Figure 7-30 Flush-mounting of the MDS D139/D339 in metal with spacer

Note

Going below the distances

If the distances (a and h) are not observed, a reduction of the field data results. It is possible to mount the MDS with metal screws (M5). This has no tangible impact on the range. It is recommended that a test is performed in critical applications.

7.13.4 Mounting in metal

It is possible to mount the MDS D339 in metal. With large antennas, for example ANT D5, this leads to a reduction of ranges.

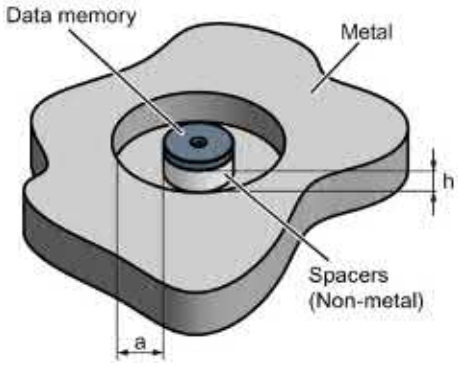

a = 100 mm

h = 30 mm

Figure 7-31 MDS D339: Mounting in metal

7.13.5 Cleaning the transponder

NOTICE

Cleaning the transponder

Do not clean the transponder with mechanical tools, sand-blasting or pressure hose. These cleaning methods result in damage to the transponder.

Clean the transponder only with the chemical cleansing agents listed in the section Chemical resistance of the reader and transponders (Page 106).

7.13.6 Technical specifications

Table 7- 35 Technical specifications of MDS D339

	6GT2600-3AA10
Product type designation	SIMATIC MDS D339
Memory	
Memory configuration	
• UID	• 8 bytes
• User memory	• 992 bytes EEPROM
• OTP memory	• 16 bytes (EEPROM)
Read cycles (at < 40 °C)	> 10^{14}
Write cycles (at < 40 °C)	> 10^{6}
Data retention time (at < 40 °C)	> 10 years
Write/read distance (S_g)	Dependent on the reader used, see section "Field data (Page 39)"
MTBF (Mean Time Between Failures)	228 years
Mechanical specifications	
Enclosure	
• Material	• PPS
• Color	• Black
Recommended distance to metal	≥ 30 mm
Power supply	Inductive, without battery

	6GT2600-3AA10
Permitted ambient conditions	
Ambient temperature	
• during write/read access	• -25 … +100 °C
• outside the read/write field	• -40 … +220 °C
	• from +125 °C: 20% reduction in the limit distance
	• at +200 °C: Tested up to 5000 hours or 6000 cycles
	• at +220 °C: Tested up to 2000 hours or 2000 cycles
• during storage	• -40 … +100 °C
Degree of protection according to EN 60529	• IP68 2 hours, 2 bar, +20 °C • IPx9K steam jet: 150 mm; 10 to 15 l/min; 100 bar; 75 °C
Shock-resistant according to EN 60721-3-7 Class 7M3 [1]	500 m/s^2
Vibration-resistant according to EN 60721-3-7 Class 7M3 [1]	200 m/s^2
Torsion and bending load	Not permitted

Design, dimensions and weight	
Dimensions (Ø x H)	85 x 15 mm
Weight	50 g
Type of mounting	1 x M5 screw [2] 1.5 Nm

1 The values for shock and vibration are maximum values and must not be applied continuously. A combination of high application temperatures together with high shock or vibration values is not possible.

2) For mounting with the spacer (6GT2690-0AA00), use a stainless steel M5 screw to avoid damaging the MDS in high temperatures (expansion coefficient).

7.13.7 Using the MDS D339 in hazardous areas

The MDS D339 transponder is classed as simple electrical equipment and can be operated in Protection Zone 2, Device Group II, Category 3G.

The following requirements of the 94/9/EC directive are met:

- EN 60079-0:2006
- EN 60079-15:2005
- EN 61241-0:2006
- EN 61241-1:2004

Identification

II 3 G Ex nA II T6

Ii 3 D Ex tD A22 IP68 T 210°C

KEMA 09 ATEX 0133 X

WARNING
Gefahr durch elektrostatische Entladungen Potential electrostatic charging hazard Danger potentiel de charges électrostatiques

Note

Installations- und Betriebsbedingungen für den explosionsgefährdeten Bereich:

a) Der Einsatz des Gerätes in der Nähe von stark ladungserzeugenden Prozessen ist untersagt.

b) Das Gerät ist mechanisch geschützt zu montieren.

c) Die Montage muss auf einem geerdeten, leitenden Untergrund erfolgen.

d) Die Reinigung darf nur mit feuchtem Tuch erfolgen.

Installation and operating conditions for hazardous areas:

a) Use of the equipment in the vicinity of processes generating high charges is not allowed.

b) The equipment must be mechanically protected when installed.

c) Installation must be performed on a grounded and conductive mounting surface.

d) Cleaning only with a wet cloth

Conditions d'installation et de mise en oeuvre pour la zone de protection Ex :

a) L'utilisation de l'appareil près de processus générant de fortes charges est interdite.

b) L'appareil doit être monté de manière à être protégé mécaniquement.

c) Le montage doit être effectué sur un socle conducteur mis à la terre.

d) Nettoyage uniquement avec un chiffon humide

7.13.8 Dimensional drawing

MDS D339

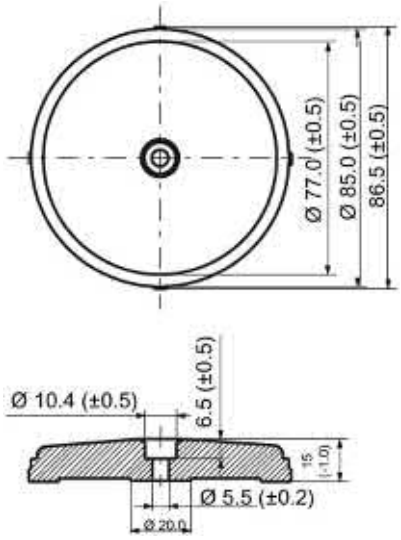

Figure 7-32 Dimension drawing of the MDS D339

Dimensions in mm

7.14 MDS D400

7.14.1 Features

MDS D400	Characteristics	
	Area of application	Simple identification such as electronic barcode replacement/supplements, from warehouse and distribution logistics right through to product identification.
	Memory size	2000 bytes of FRAM user memory
	Write/read range	See section "Field data (Page 39)"
	Mounting on metal	Yes, with spacer
	ISO standard	ISO 15693
	Degree of protection	IP67

7.14.2 Ordering data

Table 7- 36 Ordering data of MDS D400

	Article number
MDS D400	6GT2600-4AD00

Table 7- 37 Ordering data of MDS D400 accessories

	Article number
Spacer (in conjunction with fixing pocket 6GT2190-0AB00)	6GT2190-0AA00
Fixing pocket (in conjunction with spacer 6GT2190-0AA00)	6GT2190-0AB00
Fixing pocket (not suitable for fixing directly onto metal)	6GT2390-0AA00

7.14.3 Mounting on metal

Mounting on metal

It is possible to mount the MDS D400 on metal.

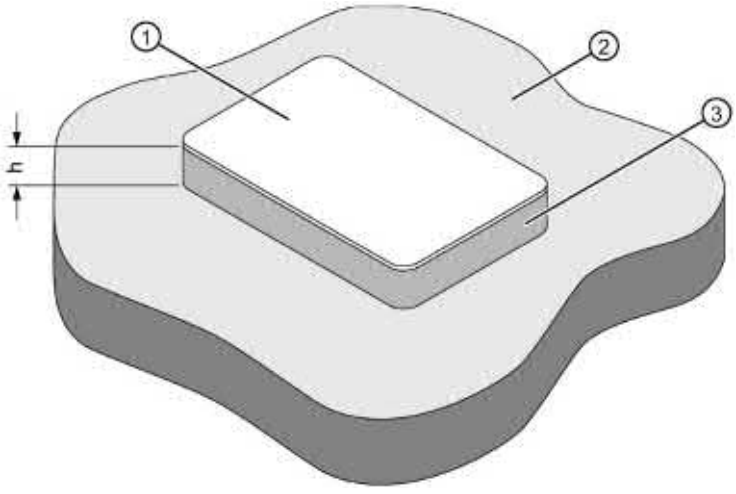

h ≥ 20 mm
① Transponder
② Metal
③ Non-metal

Figure 7-33 Mounting of the MDS D400 on metal with spacer

Flush-mounted in metal

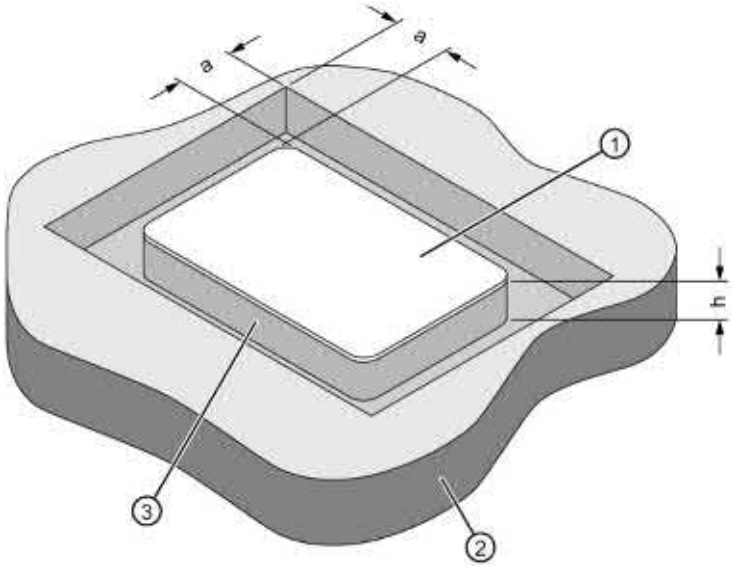

a ≥ 20 mm
h ≥ 20 mm
① Transponder
② Metal
③ Non-metal

Figure 7-34 Flush-mounting of MDS D400 in metal with spacer

Note

If the minimum guide values (h) are not observed, this will result in a reduction of the field data.

7.14.4 Technical specifications

Table 7- 38 Technical specifications for MDS D400

	6GT2600-4AD00
Product type designation	SIMATIC MDS D400
Memory	
Memory configuration	
• UID	• 8 bytes
• User memory	• 2000 bytes FRAM
• OTP memory	• 16 bytes FRAM
Read cycles (at < 25 °C)	> 10^{12}
Write cycles (at < 25 °C)	> 10^{12}
Data retention time (at < 25 °C)	> 10 years
Write/read distance (S_g)	Dependent on the reader used, see section "Field data (Page 39)"
MTBF (Mean Time Between Failures)	228 years
Mechanical specifications	
Enclosure	
• Material	• PVC
• Color	• White
Recommended distance to metal	≥ 20 mm
Power supply	Inductive, without battery
Permitted ambient conditions	
Ambient temperature	
• during write/read access	• -20 … +60 °C
• outside the read/write field	• -20 … +60 °C
• during storage	• -20 … +60 °C
Degree of protection according to EN 60529	IP67
Shock-resistant acc. to EN 60721-3-7, Class 7M2	ISO 10373 / ISO 7810 [1)]
Vibration-resistant according to EN 60721-3-7 Class 7M2	ISO 10373 / ISO 7810 [1)]
Torsion and bending load	ISO 10373 / ISO 7816-1

	6GT2600-4AD00
Design, dimensions and weight	
Dimensions (L x W x H)	85 x 54 x 0.8 mm
Weight	5 g
Type of mounting	• Fixing lug • Glued [2]

[1] The values for vibration are maximum values and must not be applied continuously.

[2] The processing instructions of the adhesive manufacturer must be observed.

7.14.5 Dimension drawing

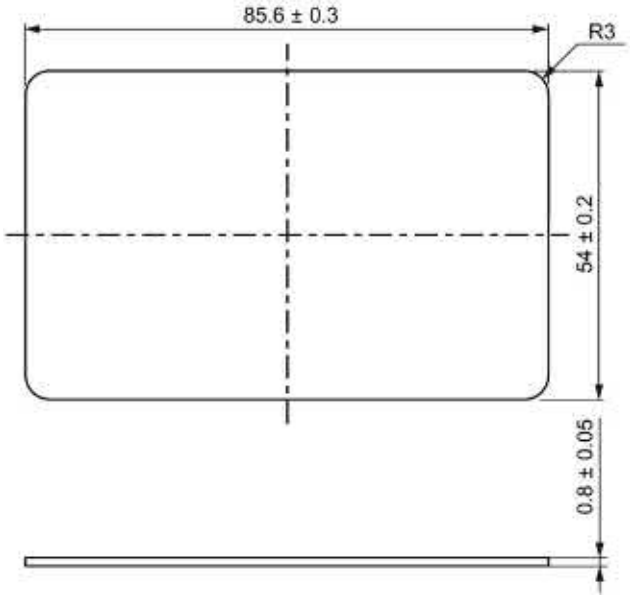

Figure 7-35 Dimensional drawing MDS D400 (dimensions in mm)

7.15 MDS D421

7.15.1 Characteristics

MDS D421	Characteristics	
	Area of application	The MDS D421 is designed for tool coding in accordance with DIN 69873. It can be used wherever small data carriers and exact positioning are required, e.g. tool identification, workpiece holders. The rugged housing of the MDS D421 means that it can also be used in a harsh industrial environment without problems.
	Memory size	2000 bytes of FRAM user memory
	Write/read range	See section "Field data (Page 39)"
	Mounting on metal	Yes, flush-mounted in metal
	ISO standard	ISO 15693
	Degree of protection	IP67/IPx9K

7.15.2 Ordering data

Table 7- 39 Ordering data of MDS D421

	Article number
MDS D421	6GT2600-4AE00

7.15.3 Mounting on metal

Mounting on metal

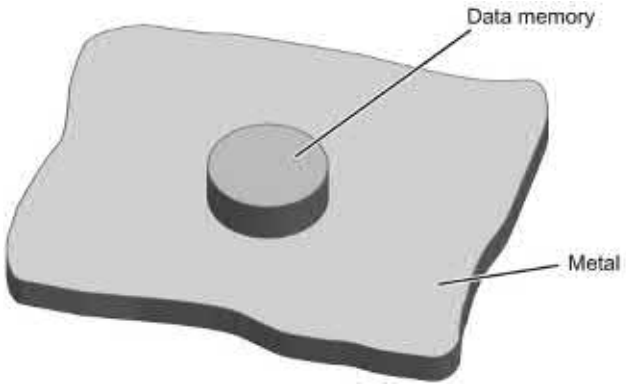

Figure 7-36 Mounting of MDS D421 on metal

Flush-mounting

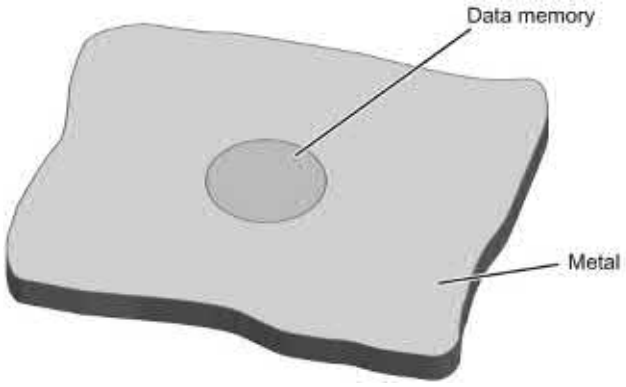

Figure 7-37 Mounting of MDS D421 in metal

Flush-mounting of MDS D421 in metal with tools

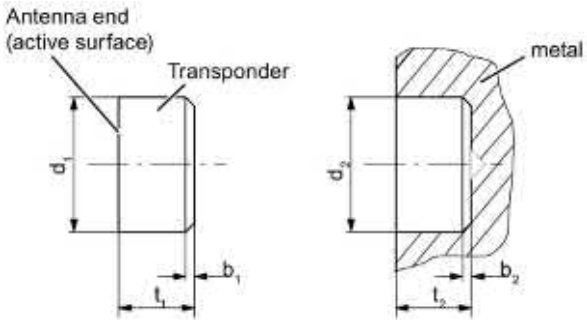

Figure 7-38 Flush-mounting of MDS D421 in metal with tools

b_1	0.5 x 45°	b_2	0.3 x 45° or R 0.3
d_1	10 (-0.04.. -0.13)	d_2	10 (+0.09... 0)
t_1	4.5 (-0... -0.1)	t_2	4.6 (+0.2... 0)

All dimensions in mm

Note

Installation instruction

The MDS should not protrude out of the locating hole; it must be flush with the outside contour.

The mounting instructions of the MDS and the conditions associated with the application (e.g. peripheral speed, temperature, and use of coolant) must be observed during the installation.

Mounting information for adhesion

- Drill installation hole
- The adhesive surfaces must be dry, free from dust, oil, stripping agents and other impurities
- Apply adhesive according to the manufacturer's processing instructions
- Press in MDS D421 using your finger; antenna side to the outside (see figure "Flush-mounting of MDS D421 in metal with tools")
- Remove residues of adhesive
- Allow to cure according to the manufacturer's instructions
- Flush-mounting of MDS D421 in metal with tools

Installation examples

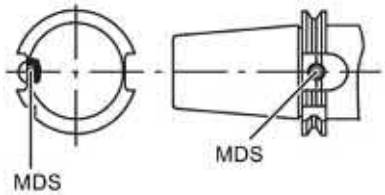

Figure 7-39 Installation example of MDS D421 in a steep cone

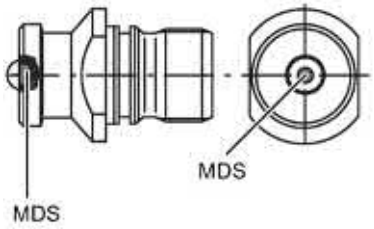

Figure 7-40 Installation example of MDS D421 in a stud bolt

7.15.4 Technical specifications

Table 7- 40 Technical specifications for the MDS D421

	6GT2600-4AE00
Product type designation	SIMATIC MDS D421
Memory	
Memory configuration	
• UID	• 8 bytes
• User memory	• 2000 bytes FRAM
• OTP memory	• 16 bytes FRAM
Read cycles (at < 40 °C)	> 10^{12}
Write cycles (at < 40 °C)	> 10^{12}
Data retention time (at < 40 °C)	> 10 years
Write/read distance (S_g)	Dependent on the reader used, see section "Field data (Page 39)"
MTBF (Mean Time Between Failures)	228 years

	6GT2600-4AE00
Mechanical specifications	
Enclosure	
• Material	• Epoxy resin
• Color	• Black
Recommended distance to metal	≥ 0 mm
Power supply	Inductive, without battery
Permitted ambient conditions	
Ambient temperature	
• during write/read access	• -25 … +85 °C
• outside the read/write field	• -40 … +100 °C
• during storage	• -40 … +100 °C
Degree of protection according to EN 60529	• IP67 • IPx9K steam jet: 150 mm; 10 to 15 l/min; 100 bar; 75 °C
Shock-resistant acc. to EN 60721-3-7, Class 7M2 [1]	1000 m/s²
Vibration-resistant acc. to EN 60721-3-7, Class 7M2 [1]	200 m/s²
Torsion and bending load	Not permitted
Design, dimensions and weight	
Dimensions (Ø x H)	10 x 4.5 mm
Weight	Approx. 1 g
Type of mounting	Glued [2]

[1] The values for shock and vibration are maximum values and must not be applied continuously.

[2] The processing instructions of the adhesive manufacturer must be observed.

7.15.5 Dimension drawing

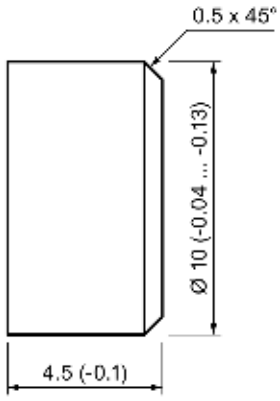

Figure 7-41 Dimension drawing of MDS D421

All dimensions in mm

7.16 MDS D422

7.16.1 Characteristics

MDS D422	Characteristics	
	Area of application	Identification of metallic workpiece holders, workpieces or containers
	Memory size	2000 bytes of FRAM user memory
	Write/read range	See section "Field data (Page 39).
	Mounting on metal	Yes
	ISO standard	ISO 15693
	Degree of protection	IP68

7.16.2 Ordering data

Table 7- 41 Ordering data of MDS D422

	Article number
MDS D422 A screw-in aid is included in the scope of supply per packaging unit	6GT2600-4AF00

7.16.3 Mounting in metal

Flush-mounting

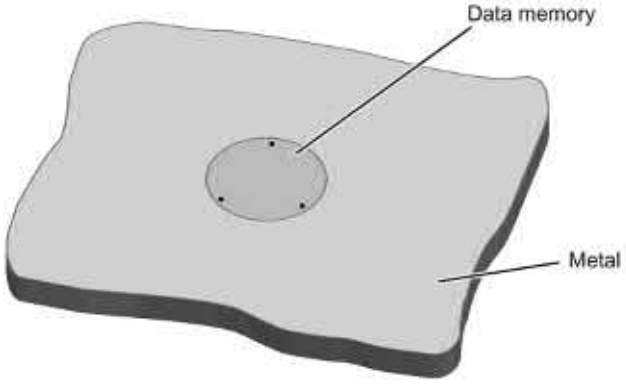

Figure 7-42 Mounting of MDS D422 in metal

Mounting information for screws

You can screw the transponder into a pre-drilled threaded hole using the screw-in aid.

Mounting information for adhesion

- Drill installation hole
- The adhesive surfaces must be dry, free from dust, oil, stripping agents and other impurities
- Apply adhesive according to the manufacturer's processing instructions
- Press in MDS D422 using your fingers; with antenna to the outside
- Remove residues of adhesive
- Allow to cure according to the manufacturer's instructions
- Flush-mounting of MDS D422 in metal with tools

7.16.4 Technical specifications

Table 7- 42 Technical specifications for the MDS D422

	6GT2600-4AF00
Product type designation	SIMATIC MDS D422
Memory	
Memory configuration	
• UID	• 8 bytes
• User memory	• 2000 bytes FRAM
• OTP memory	• 16 bytes FRAM
Read cycles (at < 40 °C)	> 10^{12}
Write cycles (at < 40 °C)	> 10^{12}
Data retention time (at < 40 °C)	> 10 years
Write/read distance (S_g)	Dependent on the reader used, see section "Field data (Page 39)"
MTBF (Mean Time Between Failures)	285 years
Mechanical specifications	
Enclosure	
• Material	• Plastic PA 6.6 GF; brass nickel plated
• Color	• Black/silver
Recommended distance to metal	≥ 0 mm
Power supply	Inductive, without battery

	6GT2600-4AF00
Permitted ambient conditions	
Ambient temperature	
• during write/read access	• -25 … +85 °C
• outside the read/write field	• -40 … +100 °C
• during storage	• -40 … +100 °C
Degree of protection according to EN 60529	IP68 2 hours, 2 bar, +20 °C
Shock-resistant acc. to EN 60721-3-7, Class 7M2 [1]	500 m/s²
Vibration-resistant acc. to EN 60721-3-7, Class 7M2 [1]	200 m/s²
Torsion and bending load	Not permitted
Design, dimensions and weight	
Dimensions (Ø x H)	20 x 6 mm
Weight	13 g
Type of mounting	• Glued [2] • 1 x transponder thread M20 ≤ 1 Nm

[1] The values for shock and vibration are maximum values and must not be applied continuously.

[2] The processing instructions of the adhesive manufacturer must be observed.

7.16.5 Dimension drawing

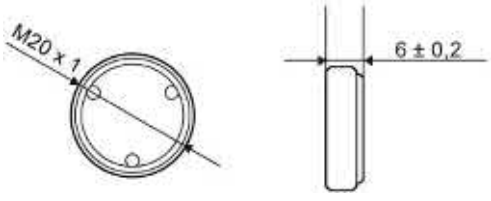

Dimensions in mm

Figure 7-43 Dimensional drawing of MDS D422

7.17 MDS D423

7.17.1 Characteristics

MDS D423	Characteristics	
	Area of application	Identification of metallic workpiece holders, workpieces or containers, production automation
	Memory size	2000 bytes of FRAM user memory
	Write/read range	See section "Field data (Page 39)"
	Mounting on metal	Yes, flush-mounted in metal
	ISO standard	ISO 15693
	Degree of protection	IP68/IPx9K

7.17.2 Ordering data

Table 7- 43 Ordering data of MDS D423

	Article number
MDS D423	6GT2600-4AA00

Table 7- 44 Ordering data of MDS D423 accessories

	Article number
Fixing hood RF330T / MDS D423	6GT2690-0AE00

7.17.3 Mounting on metal

Mounting on metal

Direct mounting of the MDS D423 on metal is possible.

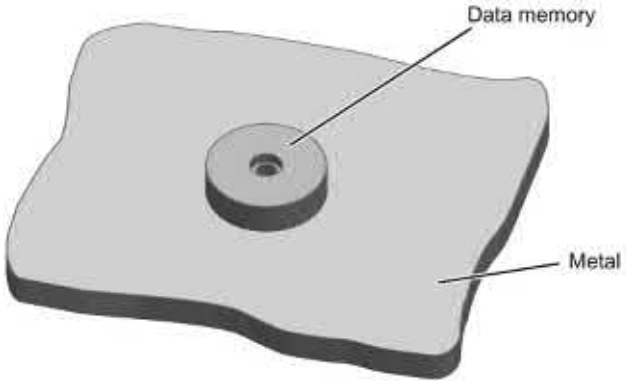

Figure 7-44 Mounting the MDS D423 on metal

Flush-mounted in metal

It is possible to mount the MDS D423 in metal.

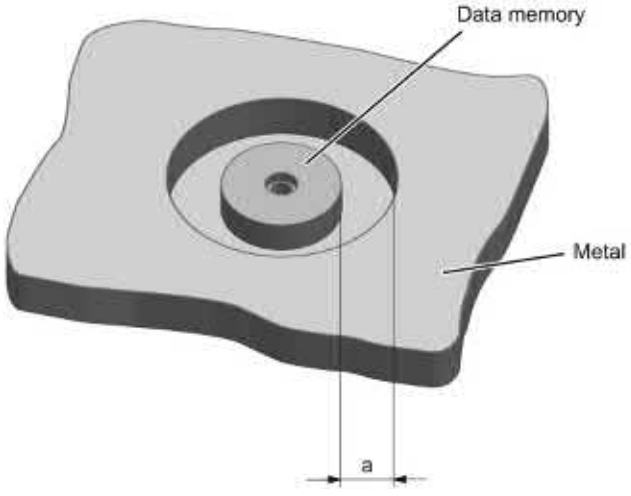

a ≥ 10 mm

Figure 7-45 Flush-mounting of the MDS D423 in metal with 10 mm clearance

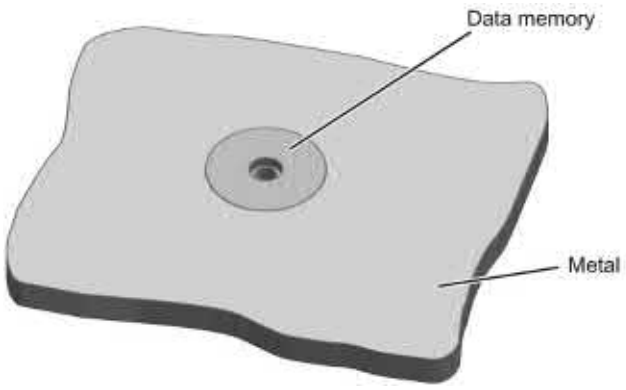

Figure 7-46 Flush-mounting of the MDS D423 in metal without clearance

Note

Reduction of the write/read range

Note that when the device is flush-mounted in metal without a surrounding clearance ≥ 10 mm, the write/read range is significantly reduced.

7.17.4 Technical specifications

Table 7- 45 Technical specifications of MDS D423

	6GT2600-4AA00
Product type designation	SIMATIC MDS D423
Memory	
Memory configuration	
• UID	• 8 bytes
• User memory	• 2000 bytes FRAM
• OTP memory	• 16 bytes FRAM
Read cycles (at < 40 °C)	> 10^{12}
Write cycles (at < 40 °C)	> 10^{12}
Data retention time (at < 40 °C)	> 10 years
Write/read distance (S_g)	Dependent on the reader used, see section "Field data (Page 39)"
MTBF (Mean Time Between Failures)	228 years

	6GT2600-4AA00
Mechanical specifications	
Enclosure	
• Material	• Plastic PPS
• Color	• Black
Recommended distance to metal	≥ 0 mm
Power supply	Inductive, without battery
Permitted ambient conditions	
Ambient temperature	
• during write/read access	• -25 … +85 °C
• outside the read/write field	• -40 … +100 °C
• during storage	• -40 … +100 °C
Degree of protection according to EN 60529	• IP68 2 hours, 2 bar, +20 °C • IPx9K steam jet: 150 mm; 10 to 15 l/min; 100 bar; 75 °C
Shock-resistant acc. to EN 60721-3-7, Class 7M2 [1]	500 m/s²
Vibration-resistant acc. to EN 60721-3-7, Class 7M2 [1]	200 m/s²
Pressure resistance	• Low pressure resistant vacuum dryer: up to 20 mbar • High pressure resistant (see degree of protection IPx9K)
Torsion and bending load	Not permitted
Design, dimensions and weight	
Dimensions (Ø x H)	30 x 8 mm
Weight	15 g
Type of mounting	1 x M4 screw [2] ≤ 1 Nm

[1] The values for shock and vibration are maximum values and must not be applied continuously.

[2]) To prevent it loosening during operation, secure the screw with screw locking varnish.

7.17.5 Dimensional drawing

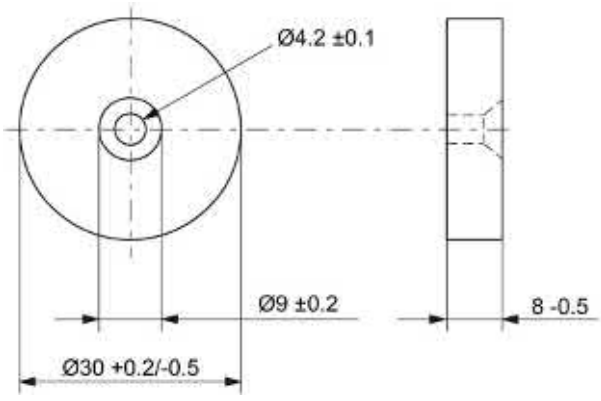

Dimensions in mm

Figure 7-47 Dimension drawing for MDS D423

7.18 MDS D424

7.18.1 Characteristics

MDS D424	Characteristics	
	Area of application	Production and distribution logistics as well as in assembly and production lines, can also be used in a harsh industrial environment without problem
	Memory size	2000 bytes of FRAM user memory
	Write/read range	See section "Field data (Page 39)."
	Mounting on metal	Yes, with spacer
	ISO standard	ISO 15693
	Degree of protection	IP67; IPx9K

7.18.2 Ordering data

Table 7- 46 Ordering data of MDS D424

	Article number
MDS D424	6GT2600-4AC00

Table 7- 47 Ordering data of MDS D424 accessories

	Article number
Spacer	6GT2690-0AK00

7.18.3 Mounting on metal

Mounting on metal

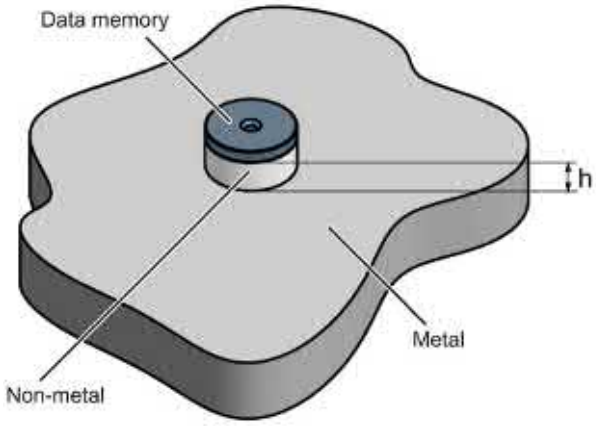

h ≥ 15 mm

Figure 7-48 Mounting the MDS D124/D324/D424/D524/E624 and RF320T on metal with spacer

Flush-mounting

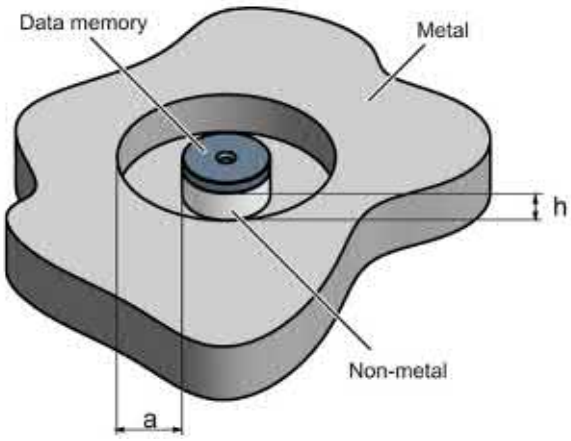

h ≥ 15 mm

a ≥ 25 mm

Figure 7-49 Flush-mounting of the MDS D124/D324/D424/D524/E624 and RF320T in metal with spacer

Note

Going below the distances

If the distances (a and h) are not observed, a reduction of the field data results. It is possible to mount the MDS with metal screws (M3 countersunk head screws). This has no tangible impact on the range.

7.18.4 Technical specifications

Table 7- 48 Technical specifications for the MDS D424

	6GT2600-4AC00
Product type designation	SIMATIC MDS D424
Memory	
Memory configuration	
• UID	• 8 bytes
• User memory	• 2000 bytes FRAM
• OTP memory	• 16 bytes FRAM
Read cycles (at < 40 °C)	> 10^{12}
Write cycles (at < 40 °C)	> 10^{12}
Data retention time (at < 40 °C)	> 10 years
Write/read distance (S_g)	Dependent on the reader used, see section "Field data (Page 39)"
MTBF (Mean Time Between Failures)	228 years
Mechanical specifications	
Enclosure	
• Material	• Epoxy resin
• Color	• Black
Recommended distance to metal	≥ 15 mm
Power supply	Inductive, without battery

	6GT2600-4AC00
Permitted ambient conditions	
Ambient temperature	
• during write/read access	• -25 … +85 °C
• outside the read/write field	• -40 … +100 °C
• during storage	• -40 … +100 °C
Degree of protection according to EN 60529	• IP67 • IPx9K
Shock-resistant according to EN 60721-3-7 Class 7M3 [1]	1000 m/s²
Vibration-resistant according to EN 60721-3-7 Class 7M3 [1]	200 m/s²
Torsion and bending load	Not permitted
Design, dimensions and weight	
Dimensions (Ø x H)	27 x 4 mm
Weight	5 g
Type of mounting	• Glued [2] • 1x screw M3 [3] ≤ 1 Nm

[1] The values for shock and vibration are maximum values and must not be applied continuously.

[2] The processing instructions of the adhesive manufacturer must be observed.

[3]) To prevent it loosening during operation, secure the screw with screw-locking varnish.

7.18.5 Dimension drawing

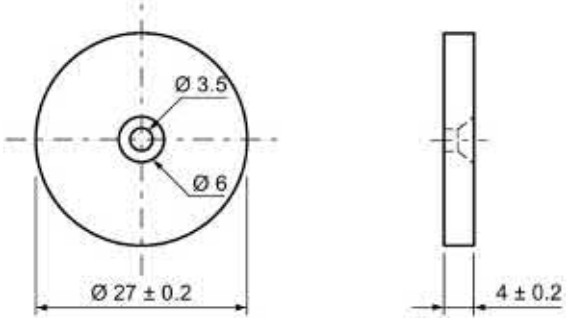

Figure 7-50 Dimension drawing of MDS D424

All dimensions in mm

7.19 MDS D425

7.19.1 Characteristics

MDS D425	Characteristics	
	Area of application	Compact and rugged ISO transponder; suitable for screw mounting Use in assembly and production lines in the powertrain sector; ideal for mounting on motors, gearboxes, and workpiece holders Rugged packaging of the MDS D425; can therefore also be used under extreme environmental conditions without problem
	Memory size	2000 bytes of FRAM user memory
	Write/read range	See section "Field data (Page 39)".
	Mounting on metal	Yes
	ISO standard	ISO 15693
	Degree of protection	IP68/IPx9K

7.19.2 Ordering data

Table 7- 49 Ordering data of MDS D425

	Article number
MDS D425	6GT2600-4AG00

7.19.3 Application example

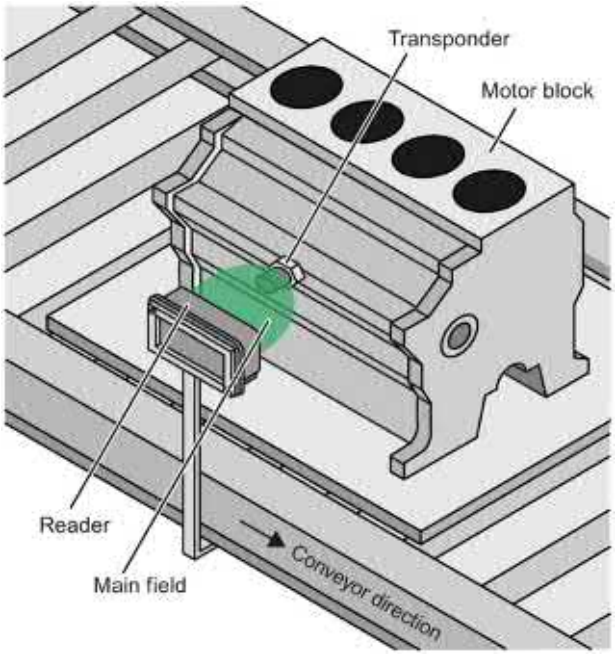

Figure 7-51 Application example

7.19.4 Technical specifications

Table 7- 50 Technical specifications for the MDS D425

	6GT2600-4AG00
Product type designation	SIMATIC MDS D425
Memory	
Memory configuration	
• UID	• 8 bytes
• User memory	• 2000 bytes FRAM
• OTP memory	• 16 bytes FRAM
Read cycles (at < 40 °C)	> 10^{12}
Write cycles (at < 40 °C)	> 10^{12}
Data retention time (at < 40 °C)	> 10 years
Write/read distance (S_g)	Dependent on the reader used, see section "Field data (Page 39)"
MTBF (Mean Time Between Failures)	228 years

	6GT2600-4AG00
Mechanical specifications	
Enclosure	
• Material	• Plastic PA 6.6 GF
• Color	• Black
Recommended distance to metal	≥ 0 mm
Power supply	Inductive, without battery
Permitted ambient conditions	
Ambient temperature	
• during write/read access	• -25 … +85 °C
• outside the read/write field	• -40 … +125 °C
• during storage	• -40 … +125 °C
Degree of protection according to EN 60529	• IP68 2 hours, 2 bar, +20 °C • IPx9K steam jet: 150 mm; 10 to 15 l/min; 100 bar; 75 °C
Shock-resistant according to IEC 68-2-27 [1)]	500 m/s^2
Vibration-resistant according to IEC 68-2-6 [1)]	200 m/s^2
Torsion and bending load	Not permitted
Design, dimensions and weight	
Dimensions (Ø x H)	24 x 10 mm (without set screw)
Weight	35 g
Type of mounting	1x transponder set screw M6 SW 22; ≤ 6 Nm

[1)] The values for shock and vibration are maximum values and must not be applied continuously.

7.19.5 Dimension drawing

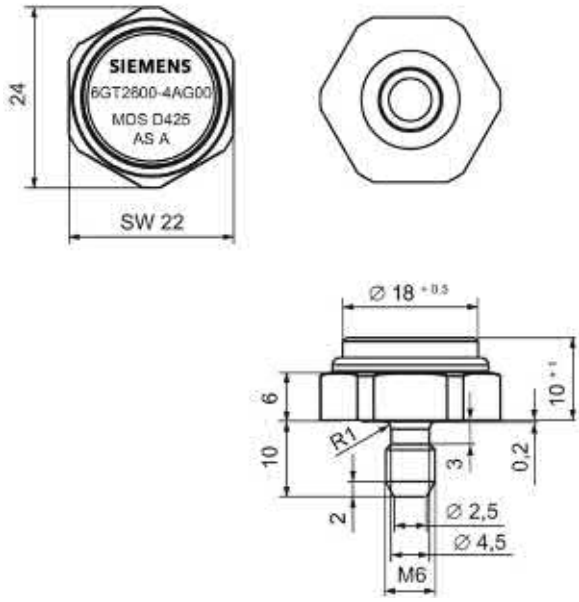

Dimensions in mm

Figure 7-52 Dimension drawing of MDS D425

7.20 MDS D426

7.20.1 Characteristics

MDS D426	Characteristics	
	Area of application	Compact and rugged ISO transponder; suitable for identification of transport units in production-related logistics; can also be deployed in harsh conditions
	Memory size	2000 bytes of FRAM user memory
	Write/read range	See section Field data (Page 39)
	Mounting on metal	Yes, with spacer
	ISO standard	ISO 15693
	Degree of protection	IP68

7.20.2 Mounting on metal

Mounting on metal

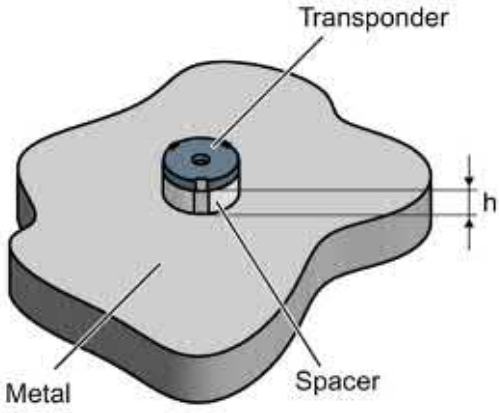

h ≥ 25 mm

Figure 7-53 Mounting the MDS D126 / D426 / D526 on metal with spacer

Flush-mounted in metal

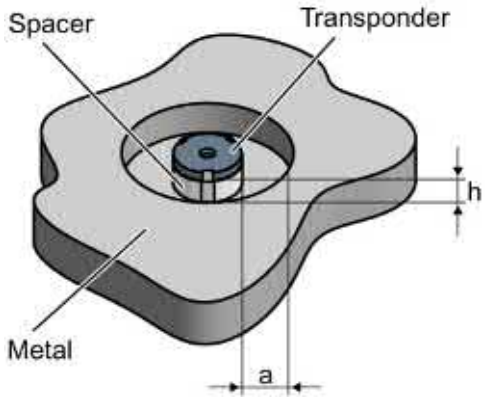

h ≥ 25 mm

a ≥ 50 mm

Figure 7-54 Flush installation of the MDS D126 / D426 / D526 in metal with spacer

7.20.3 Ordering data

Table 7- 51 Ordering data of MDS D426

	Article number
MDS D426	6GT2600-4AH00

Table 7- 52 Ordering data of MDS D426 accessories

	Article number
Spacer	6GT2690-0AL00

7.20.4 Technical specifications

Table 7- 53 Technical specifications for the MDS D426

	6GT2600-4AH00
Product type designation	SIMATIC MDS D426
Memory	
Memory configuration	
• UID	• 8 bytes
• User memory	• 2000 bytes FRAM
• OTP memory	• 16 bytes FRAM
Read cycles (at < 40 °C)	> 10^{12}
Write cycles (at < 40 °C)	> 10^{12}
Data retention time (at < 40 °C)	> 10 years
Write/read distance (S_g)	Dependent on the reader used, see section "Field data (Page 39)"
MTBF (Mean Time Between Failures)	228 years
Mechanical specifications	
Enclosure	
• Material	• Plastic PA 6.6 GF
• Color	• Black
Recommended distance to metal	≥ 25 mm
Power supply	Inductive, without battery
Permitted ambient conditions	
Ambient temperature	
• during write/read access	• -25 … +85 °C
• outside the read/write field	• -40 … +100 °C
• during storage	• -40 … +100 °C
Degree of protection according to EN 60529	IP68 2 hours, 2 bar, +20 °C
Shock-resistant according to IEC 68-2-27 1)	50 m/s^2
Vibration-resistant according to IEC 68-2-6 1)	20 m/s^2
Torsion and bending load	Not permitted

	6GT2600-4AH00
Design, dimensions and weight	
Dimensions (Ø x H)	50 x 3.6 mm
Weight	13 g
Type of mounting	1 x M4 screw [2)] ≤ 1 Nm

[1)] The values for shock and vibration are maximum values and must not be applied continuously.

[2]) To prevent it loosening during operation, secure the screw with screw locking varnish.

7.20.5 Dimension drawing

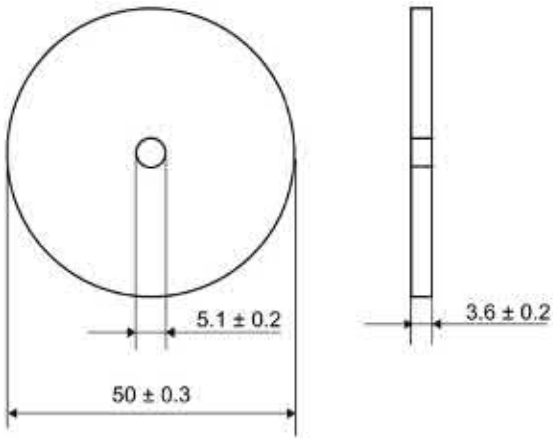

Dimensions in mm

Figure 7-55 Dimension drawing of MDS D426

7.21 MDS D428

7.21.1 Characteristics

MDS D428	Characteristics	
	Area of application	Compact and rugged ISO transponder; suitable for screw mounting. Use in assembly and production lines in the powertrain sector. The rugged housing of the MDS D428 means that it can also be used in extreme environmental conditions without problems.
	Memory size	2000 bytes of FRAM user memory
	Write/read range	See section "Field data (Page 39)"
	Mounting on metal	Yes
	ISO standard	ISO 15693
	Degree of protection	IP68/IPx9K

7.21.2 Ordering data

Table 7- 54 Ordering data of MDS D428

	Article number
MDS D428	6GT2600-4AK00-0AX0

7.21.3 Application example

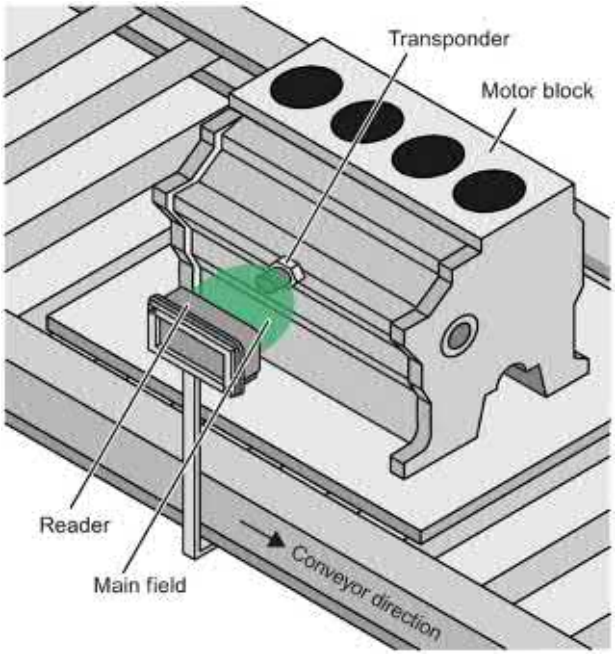

Figure 7-56 Application example

7.21.4 Technical specifications

Table 7- 55 Technical specifications for the MDS D428

	6GT2600-4AK00
Product type designation	SIMATIC MDS D428
Memory	
Memory configuration	
• UID	• 8 bytes
• User memory	• 2000 bytes FRAM
• OTP memory	• 16 bytes FRAM
Read cycles (at < 40 °C)	> 10^{12}
Write cycles (at < 40 °C)	> 10^{12}
Data retention time (at < 40 °C)	> 10 years
Write/read distance (S_g)	Dependent on the reader used, see section "Field data (Page 39)"
MTBF (Mean Time Between Failures)	228 years

	6GT2600-4AK00
Mechanical specifications	
Enclosure	
• Material	• Plastic PA 6.6 GF
• Color	• Black
Recommended distance to metal	≥ 0 mm
Power supply	Inductive, without battery
Permitted ambient conditions	
Ambient temperature	
• during write/read access	• -25 … +85 °C
• outside the read/write field	• -40 … +125 °C
• during storage	• -40 … +125 °C
Degree of protection according to EN 60529	• IP68 2 hours, 2 bar, +20 °C • IPx9K steam jet: 150 mm; 10 to 15 l/min; 100 bar; 75 °C
Shock-resistant according to IEC 68-2-27 [1)]	500 m/s^2
Vibration-resistant according to IEC 68-2-6 [1)]	200 m/s^2
Torsion and bending load	Not permitted
Design, dimensions and weight	
Dimensions (Ø x H)	24 x 20 mm (without set screw)
Weight	35 g
Type of mounting	1x transponder set screw M8 SW 22; ≤ 8 Nm

[1)] The values for shock and vibration are maximum values and must not be applied continuously.

7.21.5 Dimension drawing

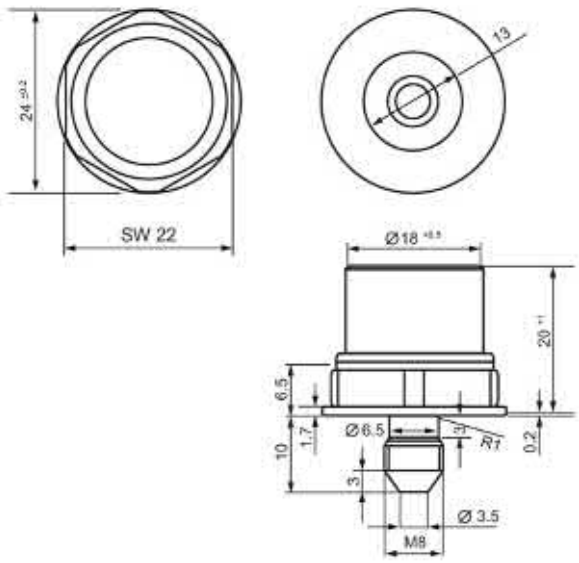

Dimensions in mm

Figure 7-57 Dimension drawing of MDS D428

7.22 MDS D460

7.22.1 Characteristics

MDS D460	Characteristics	
	Area of application	Identification in small assembly lines; can also be used in a harsh industrial environment
	Memory size	2000 bytes of FRAM user memory
	Write/read range	See section "Field data (Page 39)"
	Mounting on metal	Yes, with spacer
	ISO standard	ISO 15693
	Degree of protection	IP67/IPx9K

7.22.2 Ordering data

Table 7- 56 Ordering data of MDS D460

	Article number
MDS D460	6GT2600-4AB00

Table 7- 57 Ordering data of MDS D460 accessories

	Article number
Spacer	6GT2690-0AG00
Corner mounting bracket	6GT2690-0AN00

7.22.3 Mounting on metal

Mounting option on metal with spacer

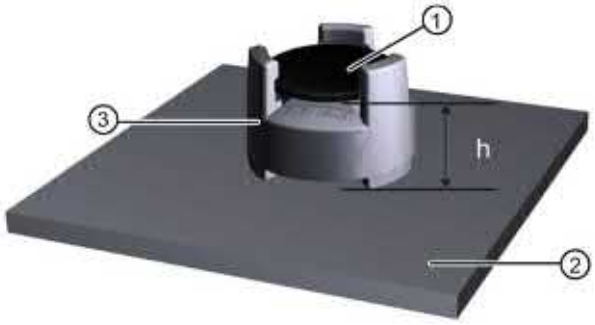

① Transponder
② Metal
③ Spacer
h ≥ 10 mm

Figure 7-58 Mounting the MDS D460 on metal with spacer

Note

If the minimum guide values (h) are not observed, a reduction of the field data results.
In critical applications, it is recommended that a test is performed.

Flush-mounting

Flush-mounting of the MDS D460 in metal is not permitted!

7.22.4 Technical specifications

Table 7- 58 Technical specifications for MDS D460

	6GT2600-4AB00
Product type designation	SIMATIC MDS D460
Memory	
Memory configuration	
• UID	• 8 bytes
• User memory	• 2000 bytes FRAM
• OTP memory	• 16 bytes FRAM
Read cycles (at < 40 °C)	> 10^{12}
Write cycles (at < 40 °C)	> 10^{12}
Data retention time (at < 40 °C)	> 10 years
Write/read distance (S_g)	Dependent on the reader used, see section "Field data (Page 39)"
MTBF (Mean Time Between Failures)	228 years
Mechanical specifications	
Enclosure	
• Material	• Epoxy resin
• Color	• Black
Recommended distance to metal	≥ 10 mm
Power supply	Inductive, without battery
Permitted ambient conditions	
Ambient temperature	
• during write/read access	• -25 … +85 °C
• outside the read/write field	• -40 … +100 °C
• during storage	• -40 … +100 °C
Degree of protection according to EN 60529	• IP67 • IPx9K steam jet: 150 mm; 10 to 15 l/min; 100 bar; 75 °C
Shock-resistant according to IEC 68-2-27 1)	500 m/s²
Vibration-resistant according to IEC 68-2-6 1)	200 m/s²
Torsion and bending load	Not permitted

	6GT2600-4AB00
Design, dimensions and weight	
Dimensions (Ø x H)	16 x 3 mm
Weight	3 g
Type of mounting	• Glued [2] • With spacer

[1] The values for shock and vibration are maximum values and must not be applied continuously.

[2] The processing instructions of the adhesive manufacturer must be observed.

7.22.5 Dimension drawings

Dimensional drawing of MDS D460

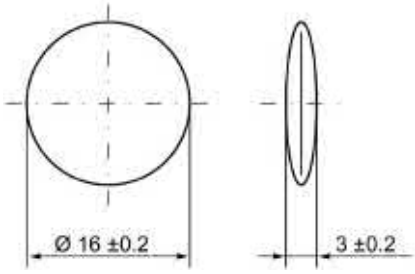

Dimensions in mm

Figure 7-59 Dimensional drawing of MDS D460

7.23 MDS D521

7.23.1 Characteristics

MDS D521	Characteristics	
	Area of application	The MDS D521 is designed for tool coding according to DIN 69873. It can be used wherever small data carriers and exact positioning are required, e.g. tool identification, workpiece holders. The rugged housing of the MDS D521 means that it can also be used in a harsh industrial environment without problems.
	Memory size	8192 bytes of FRAM user memory
	Write/read range	See section "Field data (Page 39)"
	Mounting on metal	Yes, flush-mounted in metal
	ISO standard	ISO 15693
	Degree of protection	IP67/IPx9K

7.23.2 Ordering data

Table 7- 59 Ordering data for MDS D521

	Article number
MDS D521	6GT2600-5AE00

7.23.3 Mounting on metal

Mounting on metal

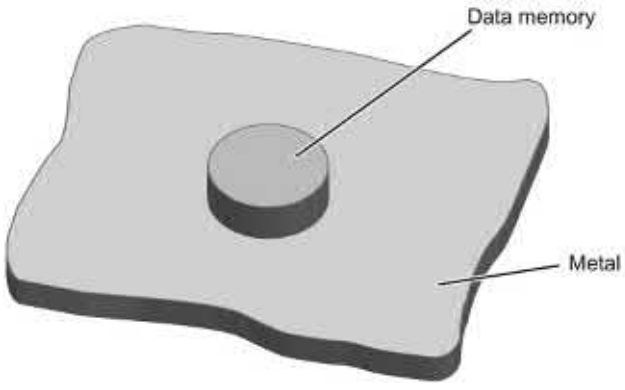

Figure 7-60 Mounting of MDS D521 on metal

Flush-mounting

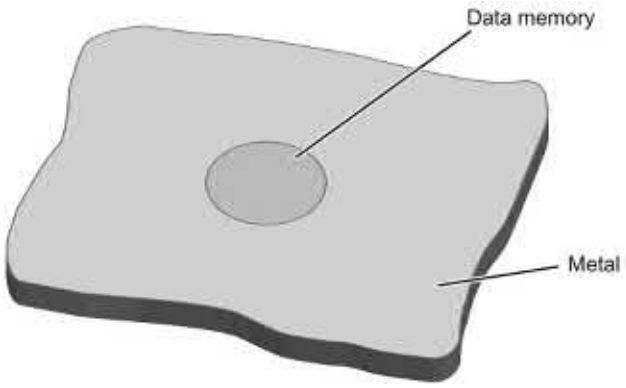

Figure 7-61 Mounting of MDS D521 in metal

Flush-mounting of MDS D521 in metal with tools

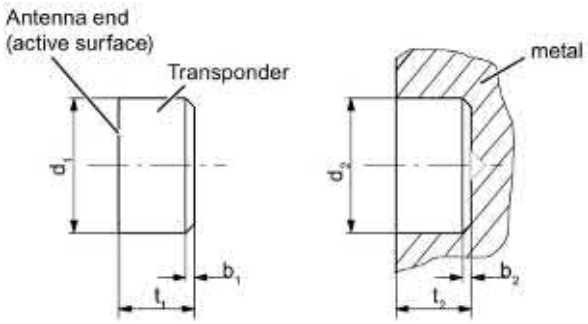

Figure 7-62 Flush-mounting of MDS D521 in metal with tools

b_1	0.5 x 45°	b_2	0.3 x 45° or R 0.3
d_1	10 (-0.04.. -0.13)	d_2	10 (+0.09... 0)
t_1	4.5 (-0... -0.1)	t_2	4.6 (+0.2... 0)

All dimensions in mm

Note

Installation instruction

The MDS should not protrude out of the locating hole; it must be flush with the outside contour.

The mounting instructions of the MDS and the conditions associated with the application (e.g. peripheral speed, temperature, and use of coolant) must be observed during the installation.

Mounting information for adhesion

- Drill installation hole
- The adhesive surfaces must be dry, free from dust, oil, stripping agents and other impurities
- Apply adhesive according to the manufacturer's processing instructions
- Press in MDS D521 using your finger; antenna side to the outside (see figure "Flush-mounting of MDS D521 in metal with tools")
- Remove residues of adhesive
- Allow to cure according to the manufacturer's instructions
- Flush-mounting of MDS D521 in metal with tools

Installation examples

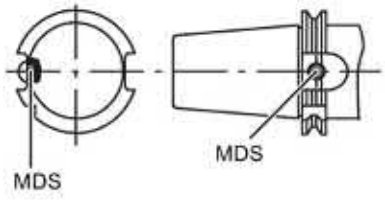

Figure 7-63 Installation example of MDS D521 in a steep cone

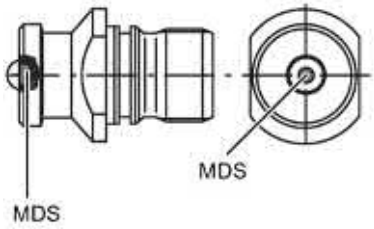

Figure 7-64 Installation example of MDS D521 in a stud bolt

7.23.4 Technical specifications

Table 7- 60 Technical specifications for MDS D521

	6GT2600-5AE00
Product type designation	SIMATIC MDS D521
Memory	
Memory configuration	
• UID	• 8 bytes
• User memory	• 8192 bytes FRAM
Read cycles (at < 40 °C)	> 10^{12}
Write cycles (at < 40 °C)	> 10^{12}
Data retention time (at < 40 °C)	> 10 years
Write/read distance (S_g)	Dependent on the reader used, see section "Field data (Page 39)"
MTBF (Mean Time Between Failures)	228 years
Mechanical specifications	
Enclosure	
• Material	• Epoxy resin
• Color	• Black
Recommended distance to metal	≥ 0 mm
Power supply	Inductive, without battery
Permitted ambient conditions	
Ambient temperature	
• during write/read access	• -25 … +85 °C
• outside the read/write field	• -40 … +100 °C
• during storage	• -40 … +100 °C
Degree of protection according to EN 60529	• IP67 • IPx9K steam jet: 150 mm; 10 to 15 l/min; 100 bar; 75 °C
Shock-resistant acc. to EN 60721-3-7, Class 7M2 [1)]	1000 m/s²
Vibration-resistant acc. to EN 60721-3-7, Class 7M2 [1)]	200 m/s²
Torsion and bending load	Not permitted

	6GT2600-5AE00
Design, dimensions and weight	
Dimensions (Ø x H)	10 x 4.5 mm
Weight	1 g
Type of mounting	Glued [2]

[1] The values for shock and vibration are maximum values and must not be applied continuously.

[2] The processing instructions of the adhesive manufacturer must be observed.

7.23.5 Dimension drawing

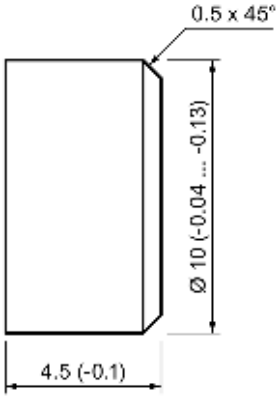

Figure 7-65 Dimension drawing of MDS D521

All dimensions in mm

7.24 MDS D522

7.24.1 Characteristics

MDS D522	Characteristics	
	Area of application	Identification of metallic workpiece holders, work-pieces or containers
	Memory size	8192 bytes of FRAM user memory
	Write/read range	See "Field data (Page 39)."
	Mounting in metal	Yes
	ISO standard	ISO 15693
	Degree of protection	IP68

7.24.2 Ordering data

Table 7- 61 Ordering data for MDS D522

	Article number
MDS D522 Units in a package: 10 units A mounting aid is included in the scope of supply per packaging unit.	6GT2600-5AF00

7.24.3 Mounting in metal

Flush-mounting

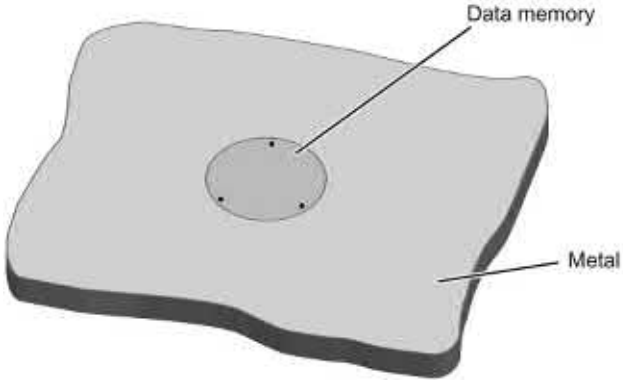

Figure 7-66 Mounting of MDS D522 in metal

Mounting information for screws

You can screw the transponder into a pre-drilled threaded hole using the screw-in aid.

Mounting information for adhesion

- Drill installation hole
- The adhesive surfaces must be dry, free from dust, oil, stripping agents and other impurities
- Apply adhesive according to the manufacturer's processing instructions
- Press in MDS D522 using your fingers; with antenna to the outside
- Remove residues of adhesive
- Allow to cure according to the manufacturer's instructions
- Flush-mounting of MDS D522 in metal with tools

7.24.4 Technical specifications

Table 7- 62 Technical specifications for MDS D522

	6GT2600-5AF00
Product type designation	SIMATIC MDS D522
Memory	
Memory configuration	
• UID	• 8 bytes
• User memory	• 8192 bytes FRAM
Read cycles (at < 40 °C)	> 10^{12}
Write cycles (at < 40 °C)	> 10^{12}
Data retention time (at < 40 °C)	> 10 years
Write/read distance (S_g)	Dependent on the reader used, see section "Field data (Page 39)"
MTBF (Mean Time Between Failures)	285 years
Mechanical specifications	
Enclosure	
• Material	• Plastic PA 6.6 GF; brass nickel plated
• Color	• Black/silver
Recommended distance to metal	≥ 0 mm
Power supply	Inductive, without battery

	6GT2600-5AF00
Permitted ambient conditions	
Ambient temperature	
• during write/read access	• -25 … +85 °C
• outside the read/write field	• -40 … +100 °C
• during storage	• -40 … +100 °C
Degree of protection according to EN 60529	IP68 2 hours, 2 bar, +20 °C
Shock-resistant acc. to EN 60721-3-7, Class 7M2 [1]	500 m/s²
Vibration-resistant acc. to EN 60721-3-7, Class 7M2 [1]	200 m/s²
Torsion and bending load	Not permitted
Design, dimensions and weight	
Dimensions (Ø x H)	20 x 6 mm
Weight	13 g
Type of mounting	• Glued [2] • 1 x transponder thread M20 ≤ 1 Nm

[1] The values for shock and vibration are maximum values and must not be applied continuously.

[2] The processing instructions of the adhesive manufacturer must be observed.

7.24.5 Dimension drawing

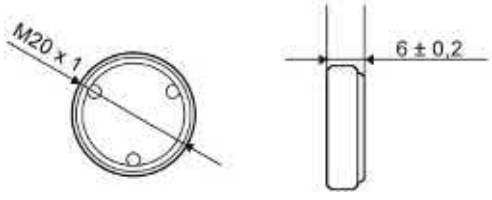

Figure 7-67 Dimensional drawing of MDS D522

All dimensions in mm

7.25 MDS D522 special variant

7.25.1 Characteristics

MDS D522 special version	Characteristics	
	Area of application	Identification of metallic workpiece holders or work-pieces
	Memory size	8192 bytes of FRAM user memory
	Write/read range	See "Field data (Page 39)."
	Mounting in metal	Yes
	ISO standard	ISO 15693
	Degree of protection	IP68

7.25.2 Ordering data

Table 7- 63 MDS D522 special version

	Article number
MDS D522 special version Units in a package: 10 units A mounting aid is included in the scope of supply per packaging unit.	6GT2600-5AF00-0AX0

7.25.3 Mounting in metal

Flush-mounting

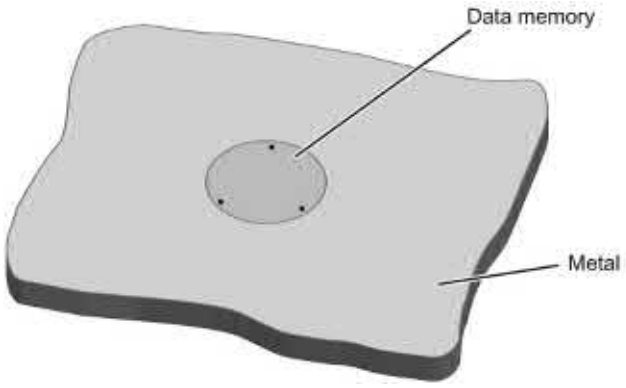

Figure 7-68 Flush installation of the MDS D522 special version in metal without clearance

7.25.4 Installation instructions

The transponder MDS D522 special version is designed to be mounted once.

Note the following instructions when mounting the MDS D522 in a workpiece to avoid damaging the transponder:

- Prepare the workpiece according to the following drawing.
- Using the accompanying mounting aid, press the transponder with uniform and evenly distributed pressure into the drilled hole until the transponder locks in place. Make sure that the transponder does not become tilted.

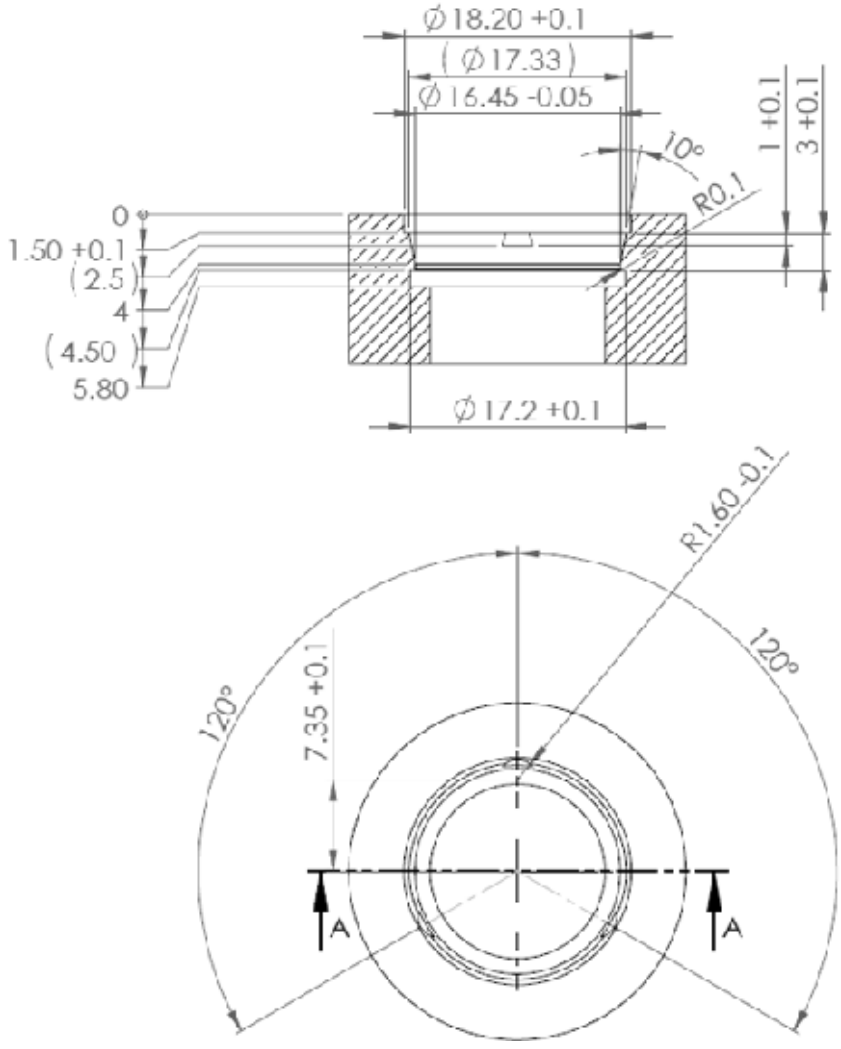

Figure 7-69 Dimension drawing: Workpiece drill hole for mounting the MDS D522 special version

7.25.5 Technical specifications

Table 7- 64 Technical data of MDS D522 special version

	6GT2600-5AF00-0AX0
Product type designation	SIMATIC MDS D522 special version
Memory	
Memory configuration	
• UID	• 8 bytes
• User memory	• 8192 bytes FRAM
Read cycles (at < 40 °C)	> 10^{12}
Write cycles (at < 40 °C)	> 10^{12}
Data retention time (at < 40 °C)	> 10 years
Write/read distance (S_g)	Dependent on the reader used, see section "Field data (Page 39)"
MTBF (Mean Time Between Failures)	228 years
Mechanical specifications	
Enclosure	
• Material	• Plastic PA 6.6 GF
• Color	• Black
Recommended distance to metal	≥ 0 mm
Power supply	Inductive, without battery
Permitted ambient conditions	
Ambient temperature	
• during write/read access	• -25 … +85 °C
• outside the read/write field	• -40 … +100 °C
• during storage	• -40 … +100 °C
Degree of protection according to EN 60529	IP68 2 hours, 2 bar, +20 °C
Shock-resistant acc. to EN 60721-3-7, Class 7M2 [1)]	500 m/s^2
Vibration-resistant acc. to EN 60721-3-7, Class 7M2 [1)]	200 m/s^2
Torsion and bending load	Not permitted

	6GT2600-5AF00-0AX0
Design, dimensions and weight	
Dimensions (Ø x H)	18 (+0.1) × 5.2 mm
Weight	Approx. 1.2 g
Type of mounting	Clipping in once (with accompanying tool)

1) The values for shock and vibration are maximum values and must not be applied continuously.

7.25.6 Dimensional drawing

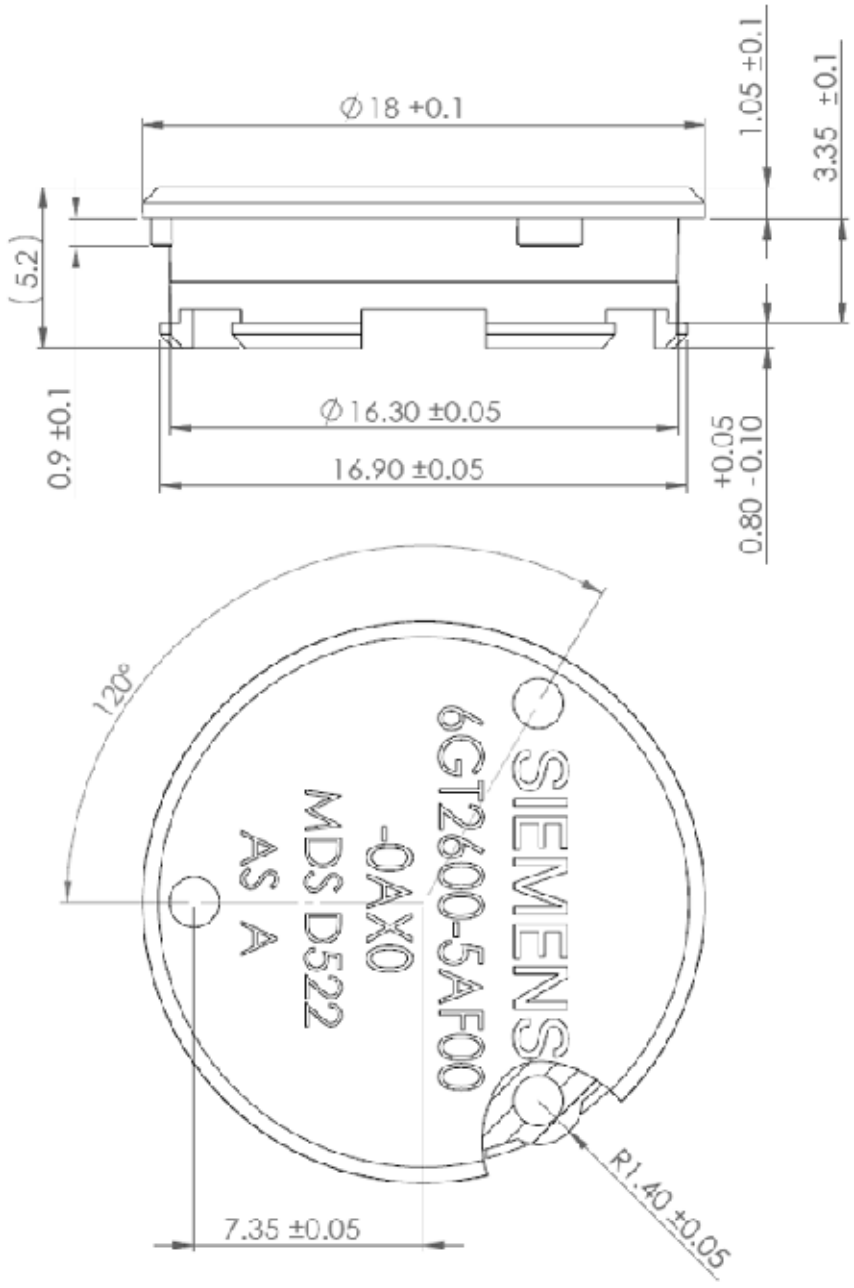

Figure 7-70 Dimension drawing MDS D522 special version

All dimensions in mm

7.26 MDS D524

7.26.1 Characteristics

MDS D524	Characteristics	
	Area of application	Production and distribution logistics as well as in assembly and production lines, can also be used in a harsh industrial environment without problem
	Memory size	8192 bytes of FRAM user memory
	Write/read range	See section "Field data (Page 39)."
	Mounting on metal	Yes, with spacer
	ISO standard	ISO 15693
	Degree of protection	IP67; IPx9K

7.26.2 Ordering data

Table 7- 65 Ordering data for MDS D524

	Article number
MDS D524	6GT2600-5AC00

Table 7- 66 Ordering data of MDS D524 accessories

	Article number
Spacer	6GT2690-0AK00

7.26.3 Mounting on metal

Mounting on metal

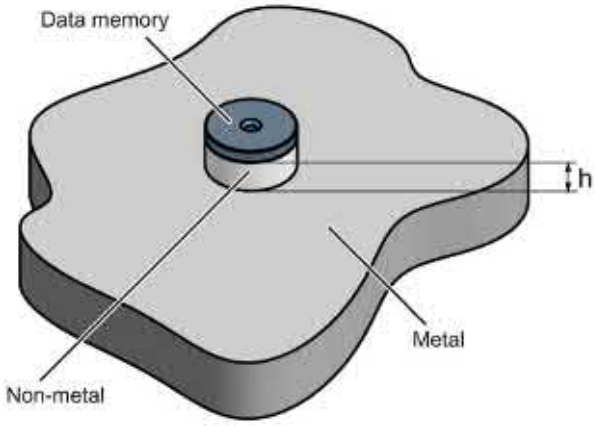

h ≥ 15 mm

Figure 7-71 Mounting the MDS D124/D324/D424/D524/E624 and RF320T on metal with spacer

Flush-mounting

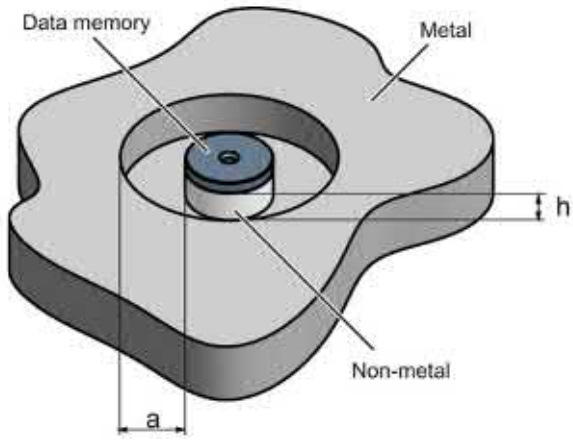

h ≥ 15 mm

a ≥ 25 mm

Figure 7-72 Flush-mounting of the MDS D124/D324/D424/D524/E624 and RF320T in metal with spacer

Note

Going below the distances

If the distances (a and h) are not observed, a reduction of the field data results. It is possible to mount the MDS with metal screws (M3 countersunk head screws). This has no tangible impact on the range.

7.26.4 Technical specifications

Table 7- 67 Technical specifications for MDS D524

	6GT2600-5AC00
Product type designation	SIMATIC MDS D524
Memory	
Memory configuration	
• UID	• 8 bytes
• User memory	• 8192 bytes FRAM
Read cycles (at < 40 °C)	> 10^{12}
Write cycles (at < 40 °C)	> 10^{12}
Data retention time (at < 40 °C)	> 10 years
Write/read distance (S_g)	Dependent on the reader used, see section "Field data (Page 39)"
MTBF (Mean Time Between Failures)	228 years
Mechanical specifications	
Enclosure	
• Material	• Epoxy resin
• Color	• Black
Recommended distance to metal	≥ 15 mm
Power supply	Inductive, without battery

	6GT2600-5AC00
Permitted ambient conditions	
Ambient temperature	
• during write/read access	• -25 … +85 °C
• outside the read/write field	• -40 … +100 °C
• during storage	• -40 … +100 °C
Degree of protection according to EN 60529	• IP67 • IPx9K
Shock-resistant according to EN 60721-3-7 Class 7M3 [1]	1000 m/s²
Vibration-resistant according to EN 60721-3-7 Class 7M3 [1]	200 m/s²
Torsion and bending load	Not permitted
Design, dimensions and weight	
Dimensions (Ø x H)	27 x 4 mm
Weight	5 g
Type of mounting	• Glued [2] • 1x screw M3 [3] ≤ 1 Nm

[1] The values for shock and vibration are maximum values and must not be applied continuously.

[2] The processing instructions of the adhesive manufacturer must be observed.

[3]) To prevent it loosening during operation, secure the screw with screw-locking varnish.

7.26.5 Dimension drawing

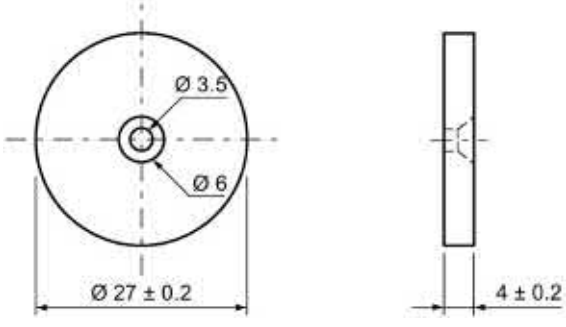

Figure 7-73 Dimensional drawing of MDS D524

All dimensions in mm

7.27 MDS D525

7.27.1 Characteristics

MDS D525	Characteristics	
	Area of application	Compact and rugged ISO transponder; suitable for screw mounting Use in assembly and production lines in the powertrain sector; ideal for mounting on motors, gearboxes, and workpiece holders Rugged packaging of the MDS D525; can therefore also be used under extreme environmental conditions without problems
	Memory size	8192 bytes of FRAM user memory
	Write/read range	See section "Field data (Page 39)".
	Mounting on metal	Yes
	ISO standard	ISO 15693
	Degree of protection	IP68/IPx9K

7.27.2 Ordering data

Table 7- 68 Ordering data for MDS D525

	Article number
MDS D525	6GT2600-5AG00

7.27.3 Application example

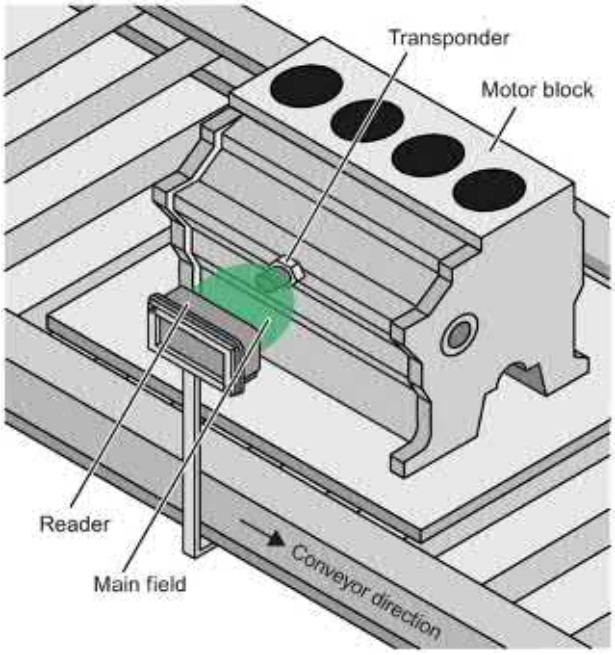

Figure 7-74 Application example

7.27.4 Technical specifications

Table 7- 69 Technical specifications for MDS D525

	6GT2600-5AG00
Product type designation	SIMATIC MDS D525
Memory	
Memory configuration	
• UID	• 8 bytes
• User memory	• 8192 bytes FRAM
Read cycles (at < 40 °C)	> 10^{12}
Write cycles (at < 40 °C)	> 10^{12}
Data retention time (at < 40 °C)	> 10 years
Write/read distance (S_g)	Dependent on the reader used, see section "Field data (Page 39)"
MTBF (Mean Time Between Failures)	228 years

	6GT2600-5AG00
Mechanical specifications	
Enclosure	
• Material	• Plastic PA 6.6 GF
• Color	• Black
Recommended distance to metal	> 0 mm
Power supply	Inductive, without battery
Permitted ambient conditions	
Ambient temperature	
• during write/read access	• -25 … +85 °C
• outside the read/write field	• -40 … +125 °C
• during storage	• -40 … +125 °C
Degree of protection according to EN 60529	• IP68 2 hours, 2 bar, +20 °C • IPx9K steam jet: 150 mm; 10 to 15 l/min; 100 bar; 75 °C
Shock-resistant according to IEC 68-2-27 [1)]	500 m/s^2
Vibration-resistant according to IEC 68-2-6 [1)]	200 m/s^2
Torsion and bending load	Not permitted
Design, dimensions and weight	
Dimensions (Ø x H)	24 x 10 mm (without set screw)
Weight	35 g
Type of mounting	1x transponder set screw M6 SW 22; ≤ 6 Nm

[1)] The values for shock and vibration are maximum values and must not be applied continuously.

7.27.5 Dimension drawing

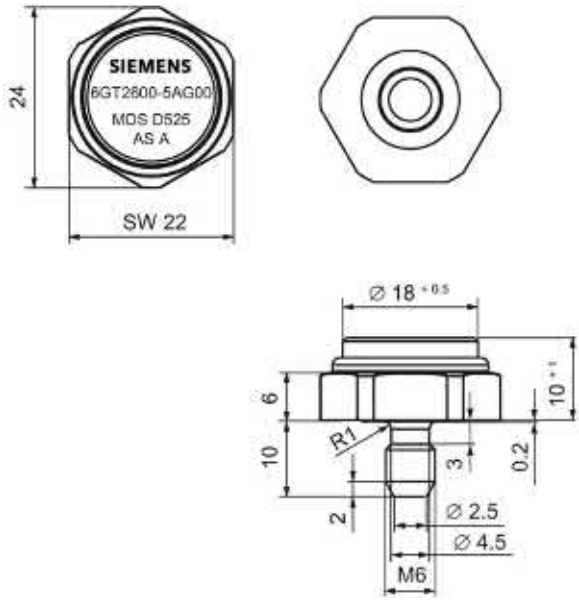

Figure 7-75 Dimensional drawing of MDS D525

All dimensions in mm

7.28 MDS D526

7.28.1 Characteristics

MDS D526	Characteristics	
	Area of application	Compact and rugged ISO transponder; suitable for identification of transport units in production-related logistics; can also be deployed in harsh conditions
	Memory size	8192 bytes of FRAM user memory
	Write/read range	See section "Field data (Page 39)."
	Mounting on metal	Yes, with spacer
	ISO standard	ISO 15693
	Degree of protection	IP68

7.28.2 Ordering data

Table 7- 70 Ordering data for MDS D526

	Article number
MDS D526	6GT2600-5AH00

Table 7- 71 Ordering data for MDS D526 accessories

	Article number
Spacer	6GT2690-0AL00

7.28.3 Mounting on metal

Mounting on metal

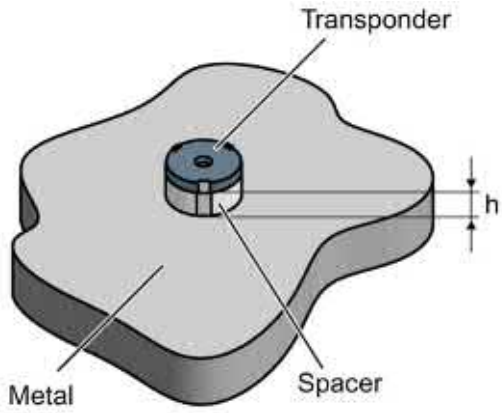

h ≥ 25 mm

Figure 7-76 Mounting the MDS D126 / D426 / D526 on metal with spacer

Flush-mounted in metal

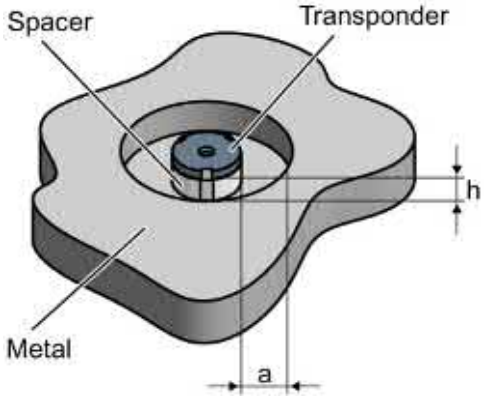

h ≥ 25 mm

a ≥ 50 mm

Figure 7-77 Flush installation of the MDS D126 / D426 / D526 in metal with spacer

7.28.4 Technical specifications

Table 7- 72 Technical specifications for MDS D526

	6GT2600-5AH00
Product type designation	SIMATIC MDS D526
Memory	
Memory configuration	
• UID	• 8 bytes
• User memory	• 8192 bytes FRAM
Read cycles (at < 40 °C)	> 10^{12}
Write cycles (at < 40 °C)	> 10^{12}
Data retention time (at < 40 °C)	> 10 years
Write/read distance (S_g)	Dependent on the reader used, see section "Field data (Page 39)"
MTBF (Mean Time Between Failures)	228 years
Mechanical specifications	
Enclosure	
• Material	• Plastic PA 6.6 GF
• Color	• Black
Recommended distance to metal	≥ 25 mm
Power supply	Inductive, without battery
Permitted ambient conditions	
Ambient temperature	
• during write/read access	• -25 … +85 °C
• outside the read/write field	• -40 … +100 °C
• during storage	• -40 … +100 °C
Degree of protection according to EN 60529	IP68 2 hours, 2 bar, +20 °C
Shock-resistant according to IEC 68-2-27 1)	500 m/s^2
Vibration-resistant according to IEC 68-2-6 1)	200 m/s^2
Torsion and bending load	Not permitted

	6GT2600-5AH00
Design, dimensions and weight	
Dimensions (Ø x H)	50 x 3.6 mm
Weight	13 g
Type of mounting	1 x M4 screw [2)] ≤ 1 Nm

[1)] The values for shock and vibration are maximum values and must not be applied continuously.

[2]) To prevent it loosening during operation, secure the screw with screw locking varnish.

7.28.5 Dimension drawing

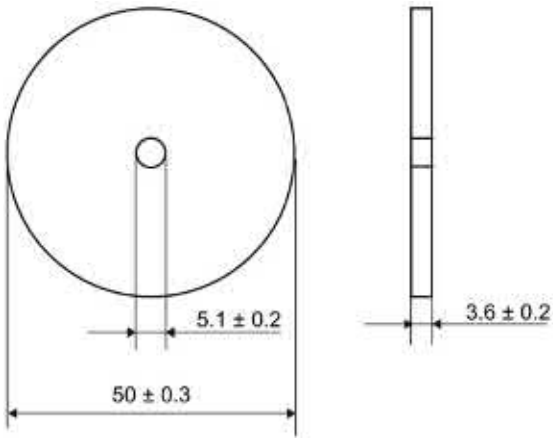

Figure 7-78 Dimensional drawing of MDS D526

All dimensions in mm

7.29 MDS D528

7.29.1 Characteristics

MDS D528	Characteristics	
	Area of application	Compact and rugged ISO transponder; suitable for screw mounting Use in assembly and production lines in the powertrain sector The rugged housing of the MDS D528 means that it can also be used in extreme environmental conditions without problems.
	Memory size	8192 bytes of FRAM user memory
	Write/read range	See section "Field data (Page 39)"
	Mounting on metal	Yes
	ISO standard	ISO 15693
	Degree of protection	IP68/IPx9K

7.29.2 Ordering data

Table 7- 73 Ordering data for MDS D528

	Article number
MDS D528	6GT2600-5AK00

7.29.3 Application example

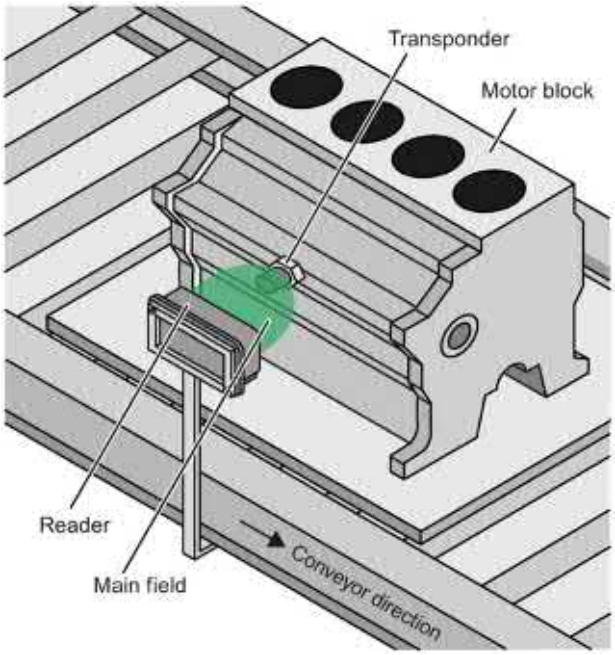

Figure 7-79 Application example

7.29.4 Technical specifications

Table 7- 74 Technical specifications for MDS D528

	6GT2600-5AK00
Product type designation	SIMATIC MDS D528
Memory	
Memory configuration	
• UID	• 8 bytes
• User memory	• 8192 bytes FRAM
Read cycles (at < 40 °C)	> 10^{12}
Write cycles (at < 40 °C)	> 10^{12}
Data retention time (at < 40 °C)	> 10 years
Write/read distance (S_g)	Dependent on the reader used, see section "Field data (Page 39)"
MTBF (Mean Time Between Failures)	228 years

	6GT2600-5AK00
Mechanical specifications	
Enclosure	
• Material	• Plastic PA 6.6 GF
• Color	• Black
Recommended distance to metal	≥ 0 mm
Power supply	Inductive, without battery
Permitted ambient conditions	
Ambient temperature	
• during write/read access	• -25 … +85 °C
• outside the read/write field	• -40 … +125 °C
• during storage	• -40 … +125 °C
Degree of protection according to EN 60529	• IP68 2 hours, 2 bar, +20 °C • IPx9K steam jet: 150 mm; 10 to 15 l/min; 100 bar; 75 °C
Shock-resistant according to IEC 68-2-27 [1)]	500 m/s^2
Vibration-resistant according to IEC 68-2-6 [1)]	200 m/s^2
Torsion and bending load	Not permitted
Design, dimensions and weight	
Dimensions (Ø x H)	24 x 20 mm (without set screw)
Weight	35 g
Type of mounting	1x transponder set screw M8 SW 22; ≤ 8 Nm

[1)] The values for shock and vibration are maximum values and must not be applied continuously.

7.29.5 Dimension drawing

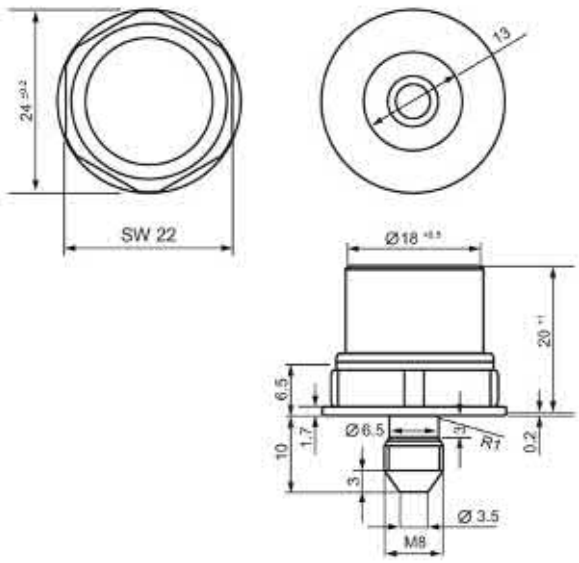

Figure 7-80 Dimensional drawing of MDS D528

All dimensions in mm

7.30 MDS D560

7.30.1 Characteristics

MDS D560	Characteristics	
	Area of application	Identification in small assembly lines; can also be used in a harsh industrial environment
	Memory size	8192 bytes of FRAM user memory
	Write/read range	See section "Field data (Page 39)."
	Mounting on metal	Yes, with spacer
	ISO standard	ISO 15693
	Degree of protection	IP67/IPx9K

7.30.2 Ordering data

Table 7- 75 Ordering data for MDS D560

	Article number
MDS D560	6GT2600-5AB00

Table 7- 76 Ordering data for MDS D560 accessories

	Article number
Spacer	6GT2690-0AG00
Corner mounting bracket	6GT2690-0AN00

7.30.3 Mounting on metal

Mounting option on metal with spacer

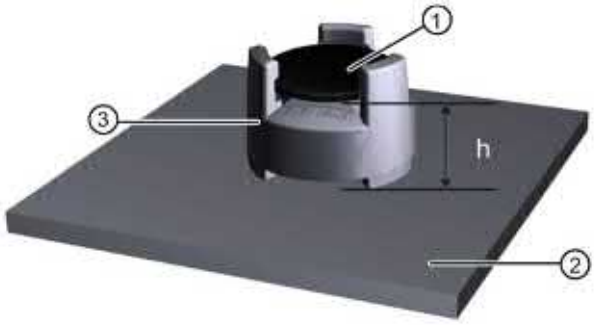

① Transponder
② Metal
③ Spacer
h ≥ 10 mm

Figure 7-81 Mounting the MDS D560 on metal with spacer

Note
Maintaining distance

If the reference value (h) is not observed, a reduction of the field data results.
In critical applications, it is recommended that a test is performed.

Note
Flush-mounting

Flush-mounting of the MDS D560 in metal is not permitted!

7.30.4 Technical specifications

Table 7- 77 Technical specifications for MDS D560

	6GT2600-5AB00
Product type designation	SIMATIC MDS D560
Memory	
Memory configuration	
• UID	• 8 bytes
• User memory	• 8192 bytes FRAM
Read cycles (at < 40 °C)	> 10^{12}
Write cycles (at < 40 °C)	> 10^{12}
Data retention time (at < 40 °C)	> 10 years
Write/read distance (S_g)	Dependent on the reader used, see section "Field data (Page 39)"
MTBF (Mean Time Between Failures)	228 years
Mechanical specifications	
Housing	
• Material	• PPS
• Color	• Beige
Recommended distance to metal	≥ 10 mm
Power supply	Inductive, without battery
Permitted ambient conditions	
Ambient temperature	
• During write/read access	• -25 … +85 °C
• Outside the read/write field	• -40 … +90 °C
• During storage	• -40 … +90 °C
Degree of protection to EN 60529	• IP67 • IPx9K steam jet: 150 mm; 10 to 15 l/min; 100 bar; 75 °C
Shock according to IEC 68-2-27 [1)]	400 m/s^2
Vibration according to IEC 68-2-6 [1)]	200 m/s^2
Torsion and bending load	Not permitted

	6GT2600-5AB00
Design, dimensions and weight	
Dimensions (Ø x H)	16 x 3 mm
Weight	3 g
Type of mounting	• Glued [2] • With spacer

[1] The values for shock and vibration are maximum values and must not be applied continuously.

[2] The processing instructions of the adhesive manufacturer must be observed.

7.30.5 Dimension drawings

Dimension drawing of MDS D560

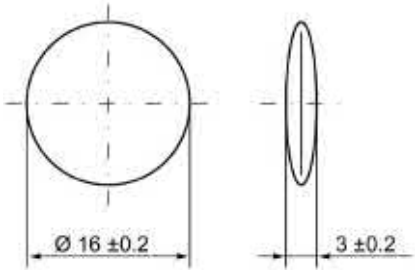

Dimensions in mm

Figure 7-82 Dimension drawing of MDS D560

System integration 8

The communication modules (interface modules) are links between the RFID components (reader and transponder) and the higher-level controllers (e.g. SIMATIC S7), or PCs or computers.

Interfacing to the controller

The readers are connected to the controller via the following interface or communications modules:

- ASM 456
- ASM 475
- SIMATIC RF120C
- SIMATIC RF160C
- SIMATIC RF170C
- SIMATIC RF180C
- SIMATIC RF182C
- SIMATIC RF185C/RF186C/RF188C
- RFID 181EIP

Function blocks, interface modules/communication modules and readers

Function blocks are used for integration into the SIMATIC. They are used to transfer the input parameters to the reader using the "init_run" (RESET) command.

You will find information on the following blocks on the Internet in "Industry Online Support - RFID (https://support.industry.siemens.com/cs/ww/en/ps/15105/man)".

- Ident profile and Ident blocks, standard function for RFID systems

  The Ident library linked into the TIA Portal (as of STEP 7 Basic / Professional V14 SP 1).
- RFID standard profile; standard functions for RFID systems
- FB 45 for MOBY U, MOBY D, RF200, RF300
- FB 55
- RF160C communications module with FC 44

Configuration and parameter assignment by means of TIA Portal technology object

You can easily and quickly configure and parameterize the entire RF300 system in the TIA Portal (as of STEP 7 Basic / Professional V14 SP 1) with the help of the "SIMATIC Ident" technology object. You can find detailed information about the technology object in the TIA Portal help.

→ Search for: Technology object "SIMATIC Ident"

Interface modules/communication modules and function blocks

The following table shows the most important features of the interface modules/communication modules, as well as the compatible function blocks.

When assigning parameters (HW Config) to the communications and interface modules, MOBY U, MOBY D, RF200, RF300 or RF600 must be selected.

Table 8- 1 Overview of interface modules/communication modules

ASM/ communications module	Interfaces to the application (PLC)	Interfaces to the reader	Reader connections	Dimensions (W x H x D)	Temperature range	Type of protecton
ASM 456	PROFIBUS DP-V1	2 x 8-pin connector socket, M12	2 (parallel)	60 x 210 x 54 or 79 mm	0 ... +55 °C	IP67
ASM 475	S7-300 (central), ET200M (PROFIBUS)	Via screw terminals in front connector	2	40 x 125 x 120 mm	0 ... +60 °C	IP20
SIMATIC RF120C	S7-1200 (central)	9-pin D-sub socket	1	30 x 100 x 75 mm	0 ... +55 °C	IP20
SIMATIC RF160C	PROFIBUS DP / DP-V0	2 x 8-pin connector socket, M12	2 (parallel)	60 x 210 x 30 mm	0 ... +55 °C	IP67
SIMATIC RF170C	PROFIBUS DP-V1 PROFINET IO	2 x 8-pin connector socket, M12	2 (parallel)	90 x 130 x 60 mm	-25 ... +55° C	IP67
SIMATIC RF180C	PROFINET IO	2 x 8-pin connector socket, M12	2 (parallel)	60 x 210 x 54 mm	0 ... +60° C	IP67
SIMATIC RF182C	TCP/IP	2 x 8-pin connector socket, M12	2 (parallel)	60 x 210 x 30 mm	0 ... +60 °C	IP67
SIMATIC RF185C/RF186C/RF188C	PROFINET IO, OPC UA	1, 2 or 4 x 8-pin connector socket, M12	1, 2 or 4 (parallel)	60 x 165 x 45 mm	-25 ... +55° C	IP67
RFID 181EIP	Ethernet IP	2 x 8-pin connector socket, M12	2 (parallel)	60 x 210 x 54 mm	0 ... +60° C	IP67

The following table shows the program blocks compatible with the interface modules/communications modules.

Table 8- 2 Compatible program blocks

ASM/ communications module	Compatible program blocks in conjunction with ...		
	S7-300 / S7-400 and STEP 7 Classic V5.5	S7-300 / S7-400 and STEP 7 Basic/Professional	S7-1200 / S7-1500 and STEP 7 Basic/Professional
ASM 456	FB 45 FB 55 FC 56 Standard profile V1.19 Ident profile	FB 45 FB 55 FC 56 Ident profile	Ident profile Ident blocks
ASM 475	FB 45 FB 55	FB 45 FB 55	--
SIMATIC RF120C	--	--	Ident profile Ident blocks
SIMATIC RF160C	FC 44 Application blocks for RF160C	FC 44 Application blocks for RF160C	Application blocks for RF160C
SIMATIC RF170C	FB 45 FB 55 Ident profile	FB 45 FB 55 Ident profile Ident blocks	Ident profile Ident blocks
SIMATIC RF180C	FB 45 FB 55 Standard profile V1.19 Ident profile	FB 45 FB 55 Ident profile Ident blocks	Ident profile Ident blocks
SIMATIC RF185C/RF186C/RF188C	FB 45 FB 55 Standard profile V1.19 Ident profile	FB 45 FB 55 Ident profile Ident blocks	Ident profile Ident blocks

System diagnostics 9

9.1 Error codes of the RF200 readers

Note

Validity of the error codes

The following error codes apply only to RF200 readers with an S-422 interface (CM mode)

You can determine the error code in two ways:

- directly on the reader/CM by counting the flashing pattern of the red error LED
- via Ident profile with the "Status" output variable

  Give consideration to the form of the output variable in the following table ("0xE&FE$$00"; "&" = 1 ... 5; "$$" = error code).
- Through the FB45 variable "error_MOBY".

Table 9- 1 Error codes of the RF200 readers

Flashing of red LED on reader	Error code (hex)	Description
00	0x00	no error
02	0x01	Presence error, possible causes: • The active command was not carried out completely • The transponder left the antenna field while the command was being processed - communication disruption between reader and transponder
05	0x05	Parameterization error, possible causes: • Unknown command • Incorrect parameter • Function not allowed
06	0x06	Air interface faulty
12	0x0C	The transponder memory cannot be written, possible cause: Hardware fault (memory faulty)
13	0x0D	Error in the specified memory address (access attempted to non-existent or non-accessible memory areas).
19	0x13	Buffer overflow: Insufficient buffer available in the reader for saving the command
20	0x14	Major system fault (hardware fault)
21	0x15	Parameter assignment error: faulty parameter in RESET command
24	0x18	Only a RESET command is permitted
25	0x19	Previous command is still active
28	0x1C	Antenna is already switched off/Antenna is already switched on
30	0x1E	Incorrect number of characters in frame

Note

Error message when memory area is protected

For transponders with a locked or protected memory area, different error messages can occur following a write command depending on the data carrier type, e.g. MDS D1xx (NXP), D3xx (Infineon), D4xx (Fujitsu): Error 01, 0C

9.2 Diagnostics functions - STEP 7

Further information on RFID diagnostics options can be found in the following function manuals:

- Function manual Ident profile and Ident blocks (https://support.industry.siemens.com/cs/us/en/view/106368029)
- Function Manual FB 45 (https://support.industry.siemens.com/cs/ww/en/view/21738808)

9.2.1 Reader diagnostics with "Reader Status" (SLG Status)

With this command you can query the status and diagnostics data of the reader.

Table 9- 2 Attribute "0x81" (mode 01), corresponds to UDT 110

Name	Type	Possible Values (hex)	Comment
hardware	char	0x31 0x32 0x33 0x34 0x41 0x4D 0x4E	Type of hardware = RF260R = RF210/220R = RF240R = RF250R = RF290R = RF280R with RS422 = RF280R with RS232
hardware_version	word	0x0100 0x0010; 0x0029; 0x002B; 0x002C	HW version (reserved) = RF200 without RF280R = RF280R
loader_version	word	0x00 ... 0xFF 0x00 ... 0xFF	Bootstrap loader version: e.g. 3130 (=version 1.0) = Version (high byte) = Version (low byte)
firmware	char	0x00 ... 0xFF	FW version : 33 (ASCII : 3 = RF2x0R)
firmware_version	word	00 ... FF 00 ... FF	Firmware version: e.g. 3130 (=version 1.0) = Version (high byte) = Version (low byte)
driver	char	0x31 0x32 0x33	Driver version 3964R = 3964R = ASCII = ASCII/ScanMode
driver_version	word	0x00 ... 0xFF 0x00 ... 0xFF	Driver version: e.g. 3132 (=version 1.2) = Version (high byte) = Version (low byte)
interface	byte	0x01 0x02	Interface type = RS-422 = RS-232

Name	Type	Possible Values (hex)	Comment
baud	byte	0x01 0x03 0x05	Transmission speed = 19.2 kBd = 57.6 kBd = 115.2 kBd
multitag_SLG	byte	0x01	Number of transponders (multitag/bulk) that can be processed in the antenna field = Single tag mode
field_ON_time_SLG	byte	0x01	ISO transponder (non-specific)
status_ant	byte	0x01 0x02	Status of the antenna = Antenna is on = antenna is off
MDS_control	byte	0x00 0x01	Presence check = Operation without presence check = Operation with presence check (antenna is activated.)

Note

Completeness of the table

Be aware that unassigned fields in the UDT are not listed here.

9.2.2 Transponder diagnostics with "Tag Status" (MDS Status)

The command can be used to scan the status data of the transponder that is located within the antenna field.

Table 9- 3 Attribute "0x83" (mode 03), corresponds to UDT 230

Name	Type	Possible Values (hex)	Comment
UID	array[1…8] byte	0x000000000 0000000 ... 0xFFFFFFFF FFFFFFFF	Unique identifier =8 byte UID, MSB first
MDS_type	byte	--	Transponder type (chip vendor, designation):
		0x01	= ISO 15693 general
		0x03	= ISO 15693 (Infineon, MDS D3xx)
		0x04	= ISO 15693 (Fujitsu - 2 KB, MDS D4xx); ISO 15693 (Fujitsu - 8 KB, MDS D5xx) [1]
		0x05	= ISO 15693 (NXP, MDS D1xx)
		0x06	= ISO 15693 (TI, MDS D2xx)
		0x07	= ISO 15693 (STM, MDS D261)
IC_version	byte	0x00 ... 0xFF	Chip version
size	word	0x00 ... 0xFF	Memory size in bytes Depending on transponder type, e.g. MDS D3xx: 992 bytes
lock_state	byte	0x00 ... 0xFF	–not used with RF200
block_size	byte	0x00 ... 0xFF	Block size of the transponder for each transponder type, e.g. MDS D3xx: 4 bytes
nr_of_blocks	byte	0x00 ... 0xFF	Number of blocks Depending on transponder type, e.g. MDS D3xx: 248 bytes

[1] Except for RF280R; possible value "0x08"

Appendix A

A.1 Certificates & approvals

All the latest RFID radio approvals are available on the Internet (http://www.siemens.com/rfid-approvals).

Labeling	Description
CE	Conformity acc. to the RED EU directive

The following applies to the system described in this documentation:
The CE marking on a device indicates the corresponding approval:

DIN ISO 9001 certificate

The quality assurance system for the entire product process (development, production, and marketing) at Siemens fulfills the requirements of ISO 9001 (corresponds to EN29001: 1987).

This has been certified by DQS (the German society for the certification of quality management systems).

EQ-Net certificate no.: 1323-01

Country-specific approvals:

Safety

If the device has one of the following markings the corresponding approval has been obtained:

Labeling	Description
	Underwriters Laboratories (UL) per UL 60950 (I.T.E) or per UL 508 (IND.CONT.EQ)
	Underwriters Laboratories (UL) according to Canadian standard C22.2 No. 60950 (I.T.E) or C22.2 No. 142 (IND.CONT.EQ)
	Underwriters Laboratories (UL) according to standard UL 60950, Report E11 5352 and Canadian standard C22.2 No. 60950 (I.T.E) or UL508 and C22.2 No. 142 (IND.CONT.EQ)
	UL recognition mark
	Canadian Standard Association (CSA) acc. to standard C22.2. No. 60950 (LR 81690) or acc. to C22.2 No. 142 (LR 63533)
NRTL	Canadian Standard Association (CSA) per American Standard UL 60950 (LR 81690) or per UL 508 (LR 63533)
	This product meets the requirements of the AS/NZS 3548 Norm.
	USA (FCC) This device complies with part 15 of the FCC rules. FCC ID: NXW-RF...
Canada (IC)	Canada (IC) This device complies with Industry Canada licence-exempt RSS standard(s). IC ID: 267X-RF...
	EAC (Eurasian Conformity) Eurasian Economic Union of Russia, Belarus, Armenia, Kazakhstan and Kyrgyzstan Declaration of conformity according to the technical regulations of the customs union (TR ZU)
ANATEL 0975-16-4794	Brazil (ANATEL) Certificado de Homologação REPÚBLICA FEDERATIVA DO BRASIL AGÊNCIA NACIONAL DE TELECOMUNICAÇÕES ANATEL IDs: • RF240R, RF250R: 0975-16-4794
ANATEL 02063-13-04061	Brazil (ANATEL) Certificado de Homologação REPÚBLICA FEDERATIVA DO BRASIL

Labeling	Description
ANATEL 02072-13-04061 ANATEL 02010-13-04061 ANATEL 04076-18-04794 ANATEL 04661-16-04794	AGÊNCIA NACIONAL DE TELECOMUNICAÇÕES RF210R, RF220R, RF260R, RF285R,RF290R: Este produto está homologado pela ANATEL, de acordo com os procedimentos regulamentados pelaResolução 242/2000, e atende aos requi sitos técnicos aplicados. Para maiores informações, consulte o site da ANATEL: www.analel.gov.br ANATEL IDs: • RF210R: 02063-13-04061 • RF220R: 02072-13-04061 • RF260R: 02010-13-04061 • RF285R: 04076-18-04794 • RF290R: 04661-16-04794 Este equipamento não tem direito à proteção contra interferência prejudicial e não pode causar interferência em sistemas devidamente autorizados.
Mexico (COFETEL)	Mexico (COFETEL) Estados Unidos Mexicanos Comision Federal de Telecomunicaciones
ICASA	South Africa (ICASA) Independent Communications Authority of South Africa, Sandton Radio Equipment Type Approval Certificate
China (CMIIT)	China (CMIIT) Radio Transmission Equipment Type Approval Certificate In accordance with the provisions on the Radio Regulations of the People's Republic of China, the following radio transmission equipment, after examination, conforms to the provisions with its CMIIT ID. CMIIT ID: XXXXYYZZZZ
KC	South Korea (KCC) Korea Communications Commission Certificate of Broadcasting and Communication Equipments Republic of Korea
VCI	Japan (VCCI)

A.2 Accessories

A.2.1 Antenna splitter

Area of application

Antenna splitter	Characteristics	
	Area of application	Designed for distributed mounting of antennas in warehouses, logistics and distribution
	Readers that can be connected	RF285R, RF290R
	Number of connectable antennas	max. 4 (by cascading)
	Connectable antennas	• ANT D1 • ANT D5 • ANT D6 • ANT D10
	Degree of protection	IP65

The antenna splitter is a power distributor with electrical isolation between the input (IN) and the two outputs (OUT1, OUT2). At the operating frequency of 13.56 MHz, the impedance at all inputs and outputs is 50 ohms.

The device is used to connect 2 to 4 antennas to a reader. Gate, C and tunnel arrangements are therefore possible (see section "Configuration options").

Ordering data

Table A- 1 Ordering data for the antenna splitter

	Article number
Antenna splitter (incl. one antenna connecting cable 3.3 m)	6GT2690-0AC00

Table A- 2 Ordering data - accessories - antenna splitter

		Article number
Antenna cable	Length 3.3 m	6GT2691-0CH33
	Length 10.5 m	6GT2691-0CN10
Antenna cable extension	Length 7.2 m	6GT2691-0DH72

Technical specifications

Table A- 3 Technical specifications for antenna splitter

Technical specifications	
max. input power	10 W
Transmission frequency	13.56 MHz
Power supply	None
Housing dimensions (L x W x H)	160 x 80 x 40 mm (without connector)
Color	Anthracite
Material	Plastic PA 12
Connector (inputs and outputs)	TNC connector
Securing	2 x M5 screws
Ambient temperature • During operation • During transportation and storage	 • -25 °C ... +65 °C • -25 °C ... +75 °C
MTBF	3.0 x 10^5 hours
Degree of protection according to EN 60529	IP65 (UL: for indoor use only)
Shock resistant according to EN 60721-3-7 Class 7M2 Total shock response spectrum Type II	30 g
Vibration according to EN 60721-3-7 Class 7M2	1 g (9 ... 200 Hz) / 1.5 g (200 ... 500 Hz)
Weight, approx.	400 g
Approval	CE UL

A.2.2 Wide-range power supply unit for SIMATIC RF systems

A.2.2.1 Features

The wide range power supply unit for SIMATIC RF systems is a primary switched device for supplying power and for use on single phase AC systems. The two DC outputs (sockets) are connected in parallel and protected by a built-in voltage limiting circuit against overload and short-circuits.

The device is vacuum-cast and prepared for Safety Class I applications. The EU and UK versions satisfy the low-voltage directive as well as the current EU standards for CE conformity. Furthermore, the US version has been UL-certified for the US and Canada.

Table A- 4 Wide-range power supply unit for SIMATIC RF systems

	Characteristics	
	Area of application	Voltage supply for Siemens Ident devices
	Degree of protection	IP67
	Design features	• Mechanically and electrically rugged design • Short-circuit and no-load stability • Suitable for frame mounting
	Structure	① Network connector (PE) ② DC output 1 ③ DC output 2 ④ Ground connection

A.2.2.2 Scope of supply

- Wide-range power supply unit for SIMATIC RF systems
- Country-specific power cable (2 m)
- Protective cover for flange outlet
- Operating Instructions

A.2.2.3 Ordering data

Table A- 5 Ordering data for the wide-range power supply unit for SIMATIC RF systems

	Article number
Wide-range power supply unit for SIMATIC RF systems (100 - 240 VAC / 24 VDC / 3 A) with 2 m connecting cable with country-specific power cable/plug	EU: 6GT2898-0AC00
	UK: 6GT2898-0AC10
	US: 6GT2898-0AC20

Table A- 6 Ordering data accessories for the wide-range power supply unit for SIMATIC RF systems

			Article number
24 V DC connecting cable for SIMATIC RF600 readers RF610R/RF615R/RF650R/RF680R/RF685R			
	• With plug	5 m	6GT2891-0PH50
	• With open ends	2 m	6GT2891-4EH20
	• With open ends	5 m	6GT2891-4EH50
24 VDC connecting cable for readers of the SIMATIC product family MOBY D		5 m	6GT2491-1HH50
24 V DC connecting cable for SIMATIC RF200/RF300 readers with RS232		5 m	6GT2891-4KH50
24 V DC connecting cable for SIMATIC RF200 / RF300 readers with RS-232 M8 plug at the 24 V end, reader plug angled		5 m	6GT2891-4KH50-0AX1
24 VDC connecting cable for SIMATIC RF200 / RF300 readers with open ends at the power supply unit end		5 m	6GT2891-4KH50-0AX0

A.2.2.4 Safety Information

WARNING

Danger to life

It is not permitted to open the device or to modify the device.

The following must also be taken into account:

- Failure to observe this requirement shall constitute a revocation of the CE approval, UL certification for the US and Canada as well as the manufacturer's warranty.
- For installation of the power supply, compliance with the DIN/VDE requirements or the country-specific regulations is essential.
- The area of application of the power supply unit is limited to "Information technology equipment" within the scope of validity of the EN 60950/VDE 0805 standard.
- When the equipment is installed, it must be ensured that the mains socket outlet is freely accessible.
- Within the operating temperature range of the power supply unit, above an ambient temperature of +25 °C, very high temperatures (max. approx. +81.5 °C at an ambient temperature of +70 °C) can occur on the housing due to the internal heating of the device. In this case, make sure that the housing is covered in order to protect people from coming into contact with the hot housing. Adequate ventilation of the power supply must be maintained under these conditions.

Note

Operating range und use of the wide-range power supply unit

The wide-range power supply unit must only be used for SIMATIC products in the specifically described operating range and for the documented intended use.

NOTICE

Liability

If the wide input range power supply for SIMATIC RF systems is connected to third-party products, the end user is responsible and liable for operation of the system or end product that includes the wide input range power supply for SIMATIC RF systems.

Note the conditions specified in the UL approval.

NOTICE
Restriction to the approval of the wide-range power supply Alterations to the SIMATIC RFID modules and devices as well as the use of SIMATIC RFID components with third-party RFID devices are not permitted. Failure to observe this requirement shall constitute a revocation of the radio equipment approvals, CE approval and manufacturer's warranty. Furthermore, the compliance to any salient safety specifications of VDE/DIN, IEC, EN, UL and CSA will not be guaranteed.

Safety notes for the US and Canada

The readers of the SIMATIC RF600 series may only be operated with the wide range power supply unit for SIMATIC RF systems - as an optional component – or with power supply units that are UL-listed in combination with the safety standards specified below:

- UL 60950-1 - Information Technology Equipment Safety - Part 1: General Requirements
- CSA C22.2 No. 60950 -1 - Safety of Information Technology Equipment

NOTICE
Warranty The compliance of the SIMATIC RFID systems to the safety standards mentioned above and the conditions in the UL approval will not be guaranteed if neither the wide-range power supply unit for SIMATIC RF systems nor power supplies listed according to the safety standards named are used.

A.2.2.5 Mounting & connecting

The wide-range power supply unit for SIMATIC RF systems is sold with a country-specific power cable for EU, UK and US.

Note

Country-specific adaptation of the connector

When necessary, the primary cable can be adapted to country-specific conditions. The connector can be replaced by a country-specific connector.

If you do this, make sure that the protective conductor is connected in the connector and that grounding is ensured. If the protective conductor cannot be connected through the plug, you must connect the grounding connection to the mounting hole ④ provided by the metal shoe.

Follow the steps below to mount and connect the wide-range power supply unit:

1. Mount the wide-range power supply using the 4x screws.

   Remember to make the grounding connection with the mounting hole ④ provided by the metal shoe.

   For detailed information on grounding and compliance with the EMC directives, refer to the "Grounding connection" section below.
2. Connect the reader to the outputs ② and ③ of the wide-range power supply unit.
3. Connect the power cable to the primary input (PE) ① of the wide-range power supply unit.
4. Connect the power cable of the wide-range power supply unit to the voltage supply.

NOTICE
Plugging/pulling the power supply cable Plugging or pulling the power cable of the wide-range power supply unit is only permitted when no voltage is applied (powered-down)

NOTICE
Strain on the power cable connector The power cable is attached to / removed from the power supply using the knurled nut integrated in the plug. Avoid twisting the plug once it is mounted. If high shock and vibration occurs, this stress must be absorbed by the power cable.

NOTICE
Restriction for maximum load If the readers are operated permanently at full load and the digital inputs/outputs are loaded with the maximum total current of 1.1 A, the maximum current consumption of a reader can reach 2 A. In this case, a maximum of one reader may be connected per wide-range power supply unit.

The wide-range power supply unit (protection class I, degree of protection IP67) has four mounting holes for securing the device.

Installation instructions

The power supply unit must be connected with the described connecting cables in the primary and secondary circuits. The connectors at the power supply unit end may only be removed or inserted when no voltage is applied. The degree of protection IP67 is only achieved with correctly connected and locked connectors. Adequate spacing around the power supply unit should be provided to ensure free convection. The connection of the voltage supply must be made taking into account the valid country-specific regulations. It must be possible to de-energize the power supply unit using a suitable device outside the voltage supply. The device is connected with connectors “L” to phase and “N” to the neutral conductor of the power network. The “PE” connector must be connected to the protective conductor (see dimensions and pin assignment). The power supply unit may only be operated with a connected protective conductor. The power supply unit is maintenance-free and contains no parts to be changed by the user. The power derating when operating at an ambient temperature of above 50 °C must be ensured by the user. The base area of the power supply unit is screwed onto the mounting plate or mounting wall using the four mounting holes (e.g. screw and washer M5). Optimum cooling by natural convection must be assured at the mounting location. When used where CSA C22.2 No 107.1-01 applies a separating element must be provided for the output circuit.

Grounding connection

For reasons of EMC, the device should also be grounded via the grounding connection ④, which is connected to the primary input (PE) ①. Ensure that this connection is as short as possible and has a cable cross-section of at least 10 mm². This will ensure that any faults occurring on the shielding can be dissipated as well as possible.

The grounding connection ④ must be electrically connected to the ground potential using a contact disc. Tighten the screw with a torque of ≈ 1.5 Nm.

Grounding connection		
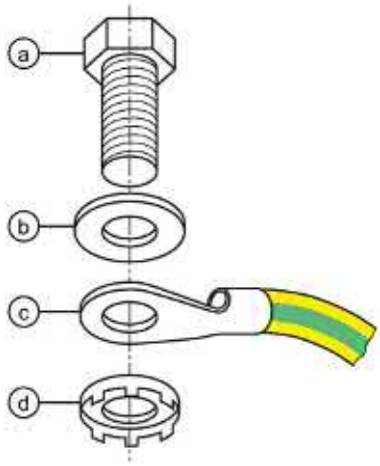	(a)	Hexagon-head screw (M5)
	(b)	Flat washer
	(c)	Cable lug
	(d)	Contact washer: To make ground contact, use contact washers according to the Siemens standard: SN 70093-6-FStflNnnc- 480h, Siemens item no.: H70093-A60-Z3

Degree of protection

The wide-range power supply unit for SIMATIC RF systems meets degree of protection IP67.

- Dust-tight: No ingress of dust
- Protected against harm from temporary submersion in water: Water must not enter in amounts that can cause damage, if the housing is immersed in water 1 m deep for 30 minutes.

All information applies only when connected and locked. The assignment of degrees of protection is subject to standardized test methods. If no secondary cables are connected, close the secondary sockets with a protective cap.

A.2.2.6 Pin assignment of DC outputs and mains connection

Table A- 7 Pin assignment of the DC outputs

	Assignment	
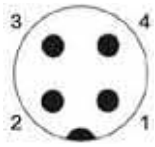	1	Ground (0 V)
	2	+24 VDC
	3	+24 VDC
	4	Ground (0 V)

Table A- 8 Pin assignment of the mains connector

	Assignment	
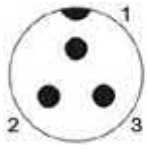	1	PE
	2	L (100 … 240 VAC)
	3	N (100 … 240 VAC)

A.2.2.7 Technical specifications

Table A- 9 Technical specifications

	6GT2898-0ACx0
Product type designation	Wide-range power supply unit for SIMATIC RF systems
Electrical data	
Insulation strength (prim./sec.) $U_{isol\ p/s}$	AC 3.3 kV Primary- secondary side are galvanically isolated
Insulation resistance R_{ins}	> 1 GΩ
Leakage current I_{leak}	< 200 µA at U_{in} = 230 VAC, f = 50 Hz
Mains buffering t_h	≥ 50 ms at U_{in} = 230 VAC
Power supply unit classification	Level 3 acc. to CSA

	6GT2898-0ACx0
Mechanical specifications	
Housing	
• Material	• Polyamide, glass-fiber reinforced • Casting compound: Polyurethane
• Color	• Black
Housing classification	UL94-V0
MTBF in years	255
Permitted ambient conditions	
Ambient temperature	
• During operation	• -25 … +70 °C
• During transportation and storage	• -40 … +85 °C
Self-heating on full-load	max. 45 K
Surface temperature	Max. +81.5 °C
Degree of protection to EN 60529	IP67
Protection class according to SELV/PELV	Separation of output voltage according to EN 60950-1 / EN 50178
Electrical safety	EN 60950 / UL 60950 / CAN/CSA 22.2 950, 3 Edition
Conducted interference	EN 61000-6-3 / EN 55011 Class B
Noise emission	EN 61000-6-3 / EN 55011 Class B
Noise immunity	
• ESD	• EN 61000-6-2 / EN 61000-4-2 Contact discharge: 4 kV (air discharge): 8 kV
• Burst	• EN 61000-6-2 / EN 61 000-4-4 Symmetrical: 2 kV Asymmetrical: 2 kV
• Surge	• EN 61000-6-5 / EN 61 000-4-5 Symmetrical: 1 kV asymmetrical 2 kV
• HF field	• EN 61000-6-2 / EN 61000-4-3 10 V, 3 V, 1 V (80 MHz ... 2.7 GHz)
HF coupling	EN 61000-6-2 / EN 61000-4-6 10 V_{eff}
Line interruption	EN 61000-6-2 / EN 61000-4-11

	6GT2898-0ACx0
Design, dimensions and weights	
Dimensions (L × W × H)	
• Without plug	• 140 × 85 × 35 mm
• With plug	• 172.7 × 85 × 35 mm
Weight	720 g
Technical specifications of the input	
Rated input voltage U_{in}	100 to 240 VAC
Input frequency f_{in}	50/60 Hz
Radio interference level	EN 55011/B
Switching frequency f_{sw}	approx. 70 kHz typ.
Connector type	7/8", 2-pin + PE 6 ... 8 mm
Technical specifications of the outputs	
Output voltage tolerance ΔU_{out}	$U_{out\ nom}$ ≤ +2 % / -1 % at U_{in} = 230 VAC, f = 50 Hz
Overvoltage protection	$U_{out\ nom}$ +20 % typ.
Noise ΔU_{LF}	≤ 1 % U_{out} at U_{in} = min., BW: 1 MHz
Noise ΔU_{HF}	≤ 2 % U_{out} U_{in} = min., BW: 20 MHz
Regulation	
• Line regulation	• ≤ 1.0% at U_{in} = min./max.
• Load regulation	• ≤ 1.0% at I_{out} = 10...90...10%
Short-circuit current I_{max}	105 ... 130 % I_{nom} at I_{nom} = 3 A (+50 °C)
Settling time t_R load variations	< 5 ms at I_{out} = 10...90...10 %
Temperature coefficient ε	0.01 % / K at T_A = -25 °C ... +70 °C
Overload behavior P_{over}	Constant current
Short-circuit protection/ No-load response	Continuous/no-load stability
Derating	2 % / K at T_A > +50 °C ... +70 °C
Connector type	M12, 4-pin two sockets

Table A- 10 Output configurations

Input	Outputs U1 = U2	ILoad = I1 + I2	Efficiency (%)	Remarks
110 VAC	24 VDC	0 A	--	No-load protection
110 VAC	24 VDC	3 A	≥ 88	--
220 VAC	24 VDC	0 A	--	No-load protection
220 VAC	24 VDC	3 A	≥ 90	--

All values are measured at full-load and at an ambient temperature of 25 °C (unless specified otherwise).

A.2.2.8 Dimension drawing

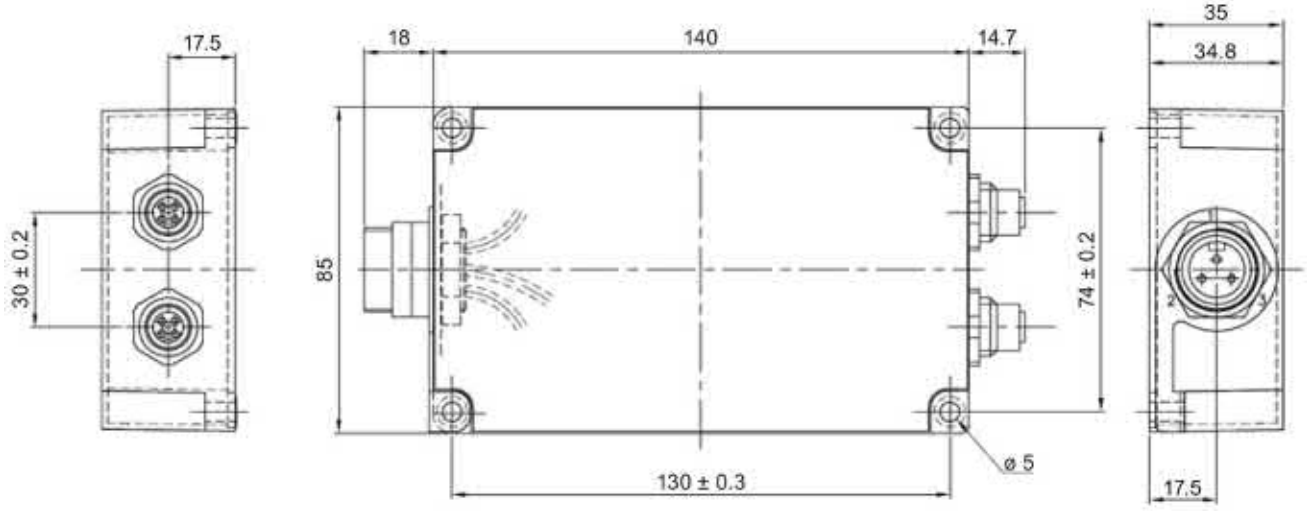

Figure A-1 Dimension drawing wide-range power supply unit for SIMATIC RF systems

All dimensions in mm

A.2.2.9 Certificates and approvals

Table A- 11 Approvals for wide-range power supply unit for SIMATIC RF systems (Europe, UK): 6GT2898-0AC00, 6GT2898-0AC10

Marking	Description
CE	CE approval acc. to • 2004/108/EG - EMC • 2006/95/EG - Voltage directive
EAC	Radio approval for Russia, Belarus, Kazakhstan

Table A- 12 Approvals for wide-range power supply unit for SIMATIC RF systems (USA): 6GT2898-0AC20

Marking	Description
c UL us	This product is UL-certified for the US and Canada. It meets the following safety standards: • UL 60950-1 Information Technology Equipment - Safety - Part 1: General Requirements • CAN/CSA C22.2 No. 60950-1-07 Safety of Information Technology Equipment. • cURus +CB - UL/IEC 60950-1 and Limited power source under UL 1310 • UL Report E 205089

Engineering Conditions of Acceptability

For use only in or with complete equipment where the acceptability of the combination is determined by ULLLC. When installed in an end-product, consideration must be given to the following:

- Reference temperatures on the unit enclosure were measured during heating test. The max obtained temperature with condition C at Enclosure I was 81.5 °C. See chapter "Technical specifications (Page 427)" Additional Information for normal load condition details.
- The unit is completely encapsulated. Potting improve mechanical and thermal properties of the unit.
- The following Production-Line tests are conducted for this product: Electric Strength, Earthing Continuity
- The end-product Electric Strength Test is to be based upon a maximum working voltage of: Primary-Earthed Dead Metal: 300 Vrms, 342 Vpk; Primary-SELV: 300 Vrms, 613 Vpk
- The following secondary output circuits are SELV: 24 Vdc output of the unit.
- The following secondary output circuits are at non-hazardous energy levels: 24 Vdc output.
- The following secondary output circuits are supplied by a Limited Power Source: 24 Vdc output.
- The following output terminals were referenced to earth during performance testing: Terminal P4 (-) during DETERMINATION OF WORKING VOLTAGE - WORKING VOLTAGE MEASUREMENT TEST.
- The maximum investigated branch circuit rating is: 20 A
- The investigated Pollution Degree is: 2
- Proper bonding to the end-product main protective earthing termination is: Required
- An investigation of the protective bonding terminals has: Been conducted
- The following input terminals/connectors must be connected to the end-product supply neutral:

  Please see chapter "Mounting & connecting (Page 423)".
- The equipment is suitable for direct connection to: AC mains supply
- Output is supplied by circuit that complies with NEC Class 2 requirements (additional evaluation acc. UL1310 has been conducted during the product investigation).

A.2.3 Transponder holders

Table A- 13 Overview of transponder holders and spacers

Product photo	Insertable transponders	Characteristics
6GT2190-0AA00	• MDS D100 • MDS D200 • MDS D400	• Spacer for mounting on metal, in conjunction with the fixing pocket 6GT2190-0AB00 • Distance from transponder to metal: 25 mm • Mounting: 4 x M4 screws • Material: PA6 • Weight: 31 g • Dimensions (L x W x H): 110 x 62 x 24 mm
6GT2190-0AB00	• MDS D100 • MDS D200 • MDS D400	• Fixing pocket in conjunction with spacer 6GT2190-0AA00 • Mounting: – Locks into spacer – 2 x screws/nails – Stapled • Material: PA6 • Weight: 12 g • Dimensions (L x W x H): 121 x 57 x 5 mm
6GT2390-0AA00	• MDS D100 • MDS D200 • MDS D400	• Fixing pocket not suitable for mounting directly on metal • Mounting: 2 x M4 countersunk screws • Material: PA6 • Weight: 21 g • Dimensions (L x W x H): 110 x 65 x 5 mm
6GT2690-0AA00	• MDS D139 • MDS D339	• Spacer for mounting on metal • Distance from transponder to metal: 30 mm • Mounting: 1 x M5 stainless steel screw • Tightening torque: 1.5 Nm • Material: PPS • Weight: 50 g • Dimensions (Ø x H): 85 x 30 mm

Product photo	Insertable transponders	Characteristics
 6GT2690-0AH00	• MDS D139 • MDS D339	• Quick change holder for mounting on metal • Distance from transponder to metal: 30 mm • Mounting: Screw-in • Material: Stainless steel VA • Weight: 80 g • Dimensions (Ø x H): 22 x 60 mm
 6GT2690-0AH10	• MDS D139 • MDS D339	• Quick change holder for mounting on metal • Distance from transponder to metal: 30 mm • Mounting: Screw-in • Material: Stainless steel VA • Weight: 60 g • Dimensions (Ø x H): 22 x 47 mm
 6GT2690-0AK00	• MDS D124 • MDS D324 • MDS D424 • MDS D524	• Spacer for mounting on metal • Distance from transponder to metal: 15 mm • Mounting: 1 x M4 countersunk screw • Tightening torque: ≤ 1 Nm • Material: PPS • Weight: Approx. 4 g • Remounting cycles: at least 10 • Dimensions (Ø x H): 36 x 22 mm
 6GT2690-0AL00	• MDS D126 • MDS D426 • MDS D526	• Spacer for mounting on metal • Distance from transponder to metal: 25 mm • Mounting: 1 x M4 countersunk screw • Tightening torque: ≤ 1 Nm • Material: PA6 • Weight: Approx. 12 g • Remounting cycles: at least 10 • Dimensions (Ø x H): 59 x 30 mm

Product photo	Insertable transponders	Characteristics
6GT2690-0AG00	• MDS D160 • MDS D460 • MDS D560	• Spacer for mounting on metal • Distance from transponder to metal: 10 mm • Mounting: 1 x M3 countersunk screw • Material: PA6 • Weight: 2 g • Dimensions (Ø x H): 20 x 14.3 mm
6GT2690-0AN00	• MDS D160 • MDS D460 • MDS D560	• Corner mounting bracket for mounting on metal • Mounting: Cylinder head screw M4 • Material: PA6-GF • Weight: 2 g • Dimensions (H x W x D) 27.5 x 19 x 18 mm (without alignment pin)

Dimensional drawings

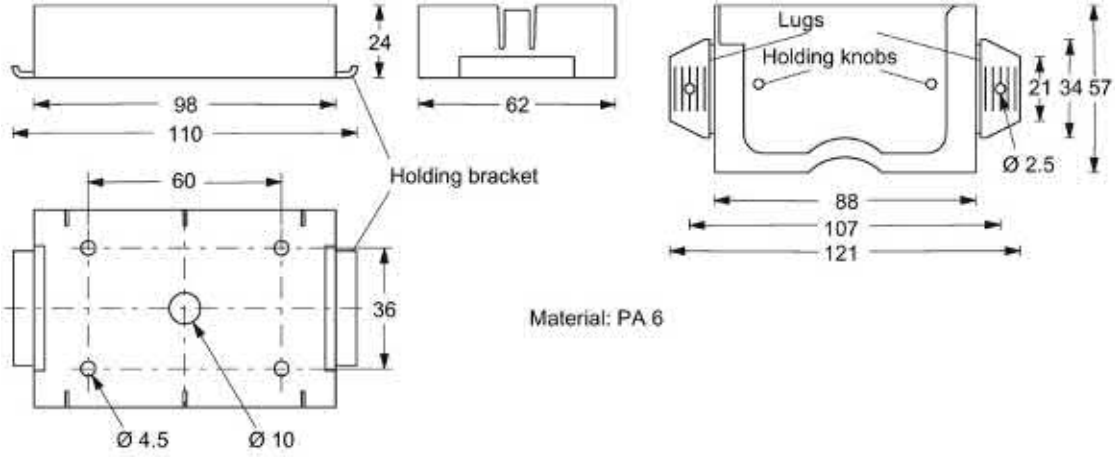

Figure A-2 Dimension drawing of spacer 6GT2190-0AA00 with fixing pocket 6GT2190-0AB00

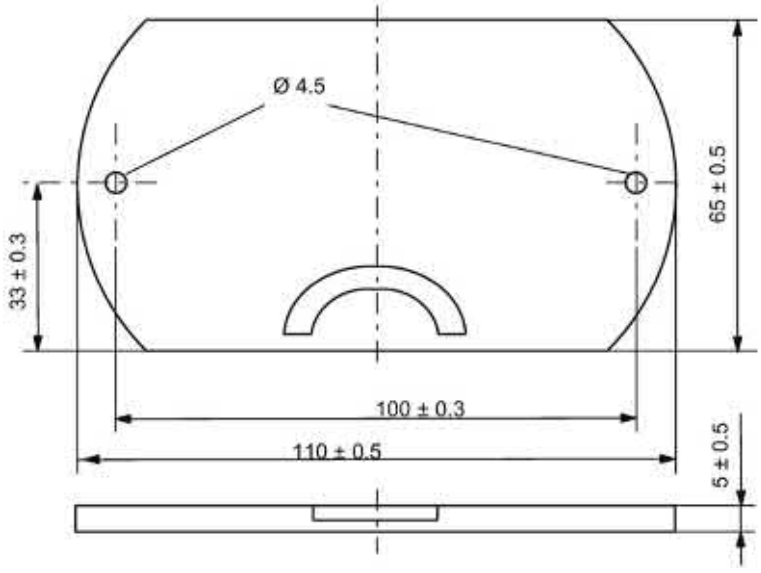

Figure A-3 Dimension drawing of fixing pocket 6GT2390-0AA00

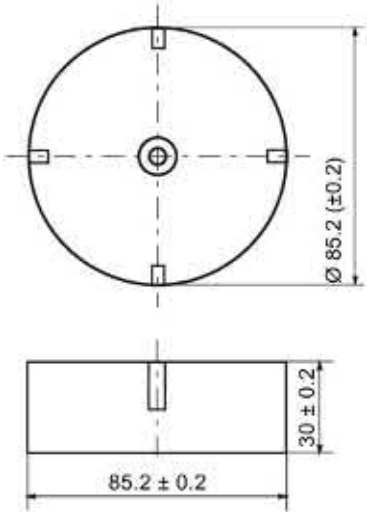

Figure A-4 Dimension drawing of spacer 6GT2690-0AA00

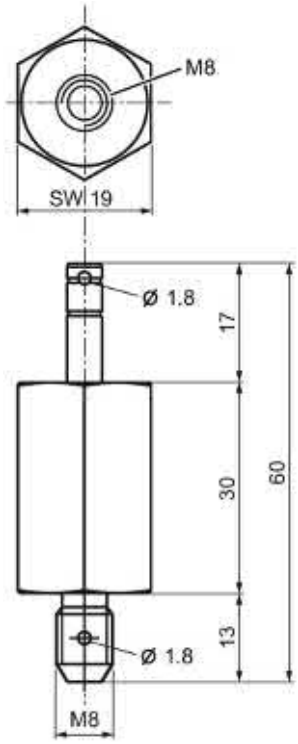

Figure A-5 Dimension drawing of quick change holder 6GT2690-0AH00

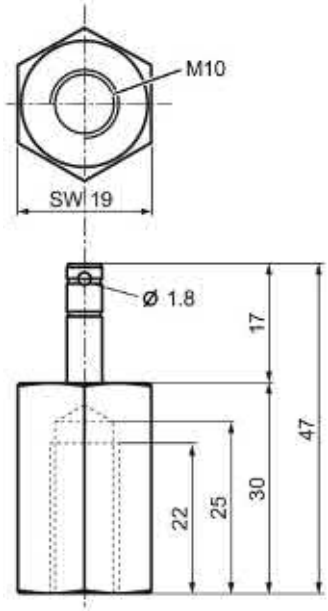

Figure A-6 Dimension drawing of quick change holder 6GT2690-0AH10

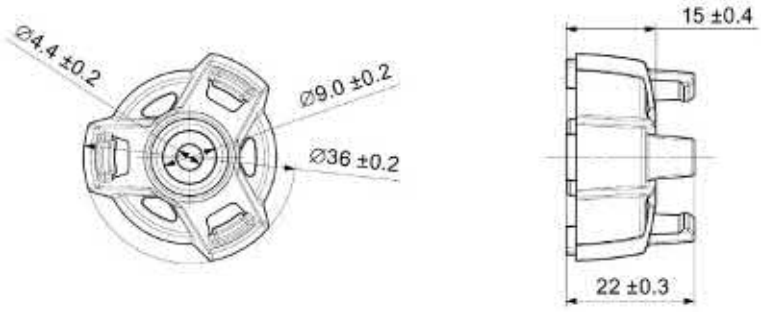

Figure A-7 Dimension drawing of spacer 6GT2690-0AK00

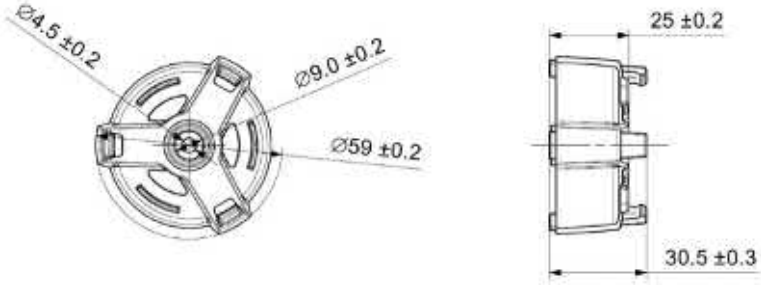

Figure A-8 Dimension drawing of spacer 6GT2690-0AL00

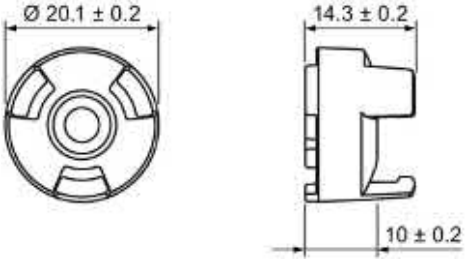

Figure A-9 Dimension drawing of spacer 6GT2690-0AG00

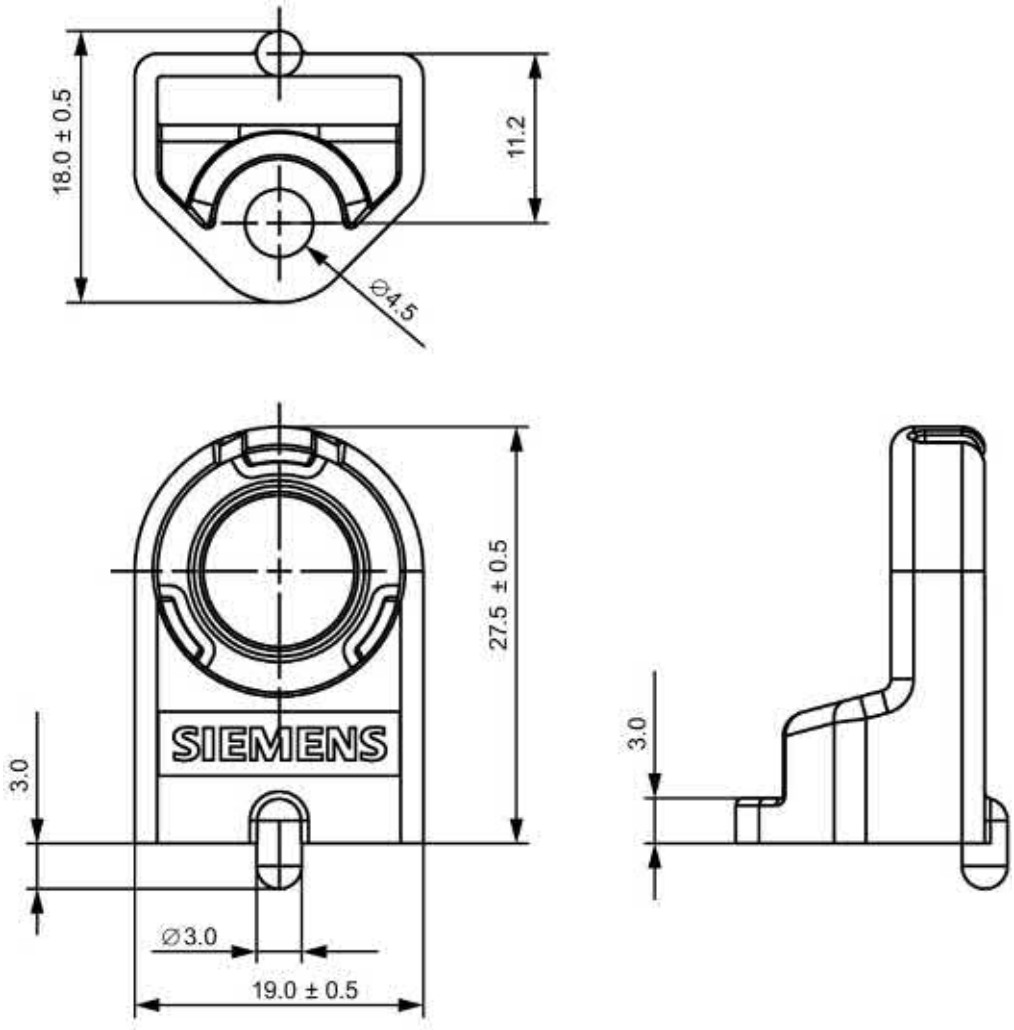

Figure A-10 Dimension drawing corner mounting bracket 6GT2690-0AN00

A.3 Connecting cable

A.3.1 RF2xxR reader (RS-422) with ASM 456 / RF160C / RF170C / RF180C / RF18xC / RF182C

Connecting cable with straight connector

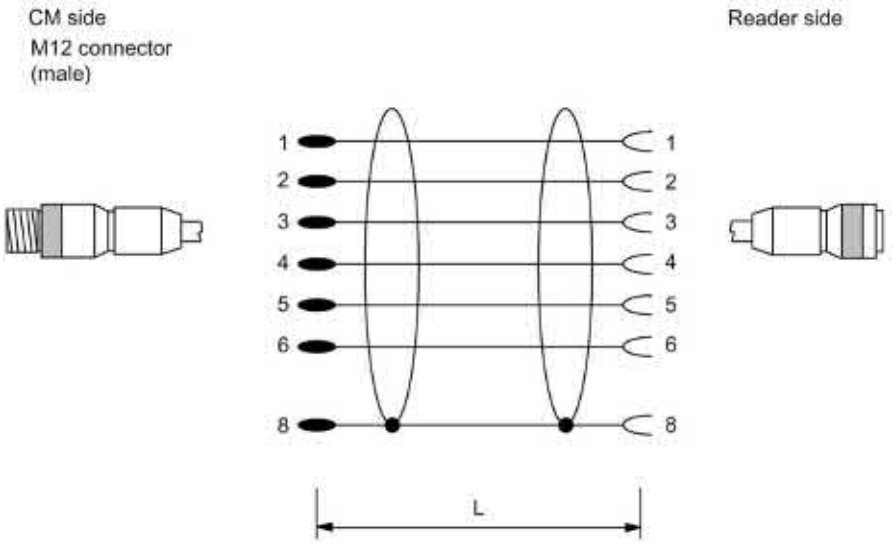

Figure A-11 Connecting cable between ASM 456, RF160C, RF170C, RF180C, RF18xC, RF182C and RF2xxR reader (RS422)

Table A- 14 Ordering data

Length L	Article number
2 m	6GT2891-4FH20
5 m	6GT2891-4FH50
10 m	6GT2891-4FN10
20 m	6GT2891-4FN20
50 m	6GT2891-4FN50

Connecting cable with angled connector

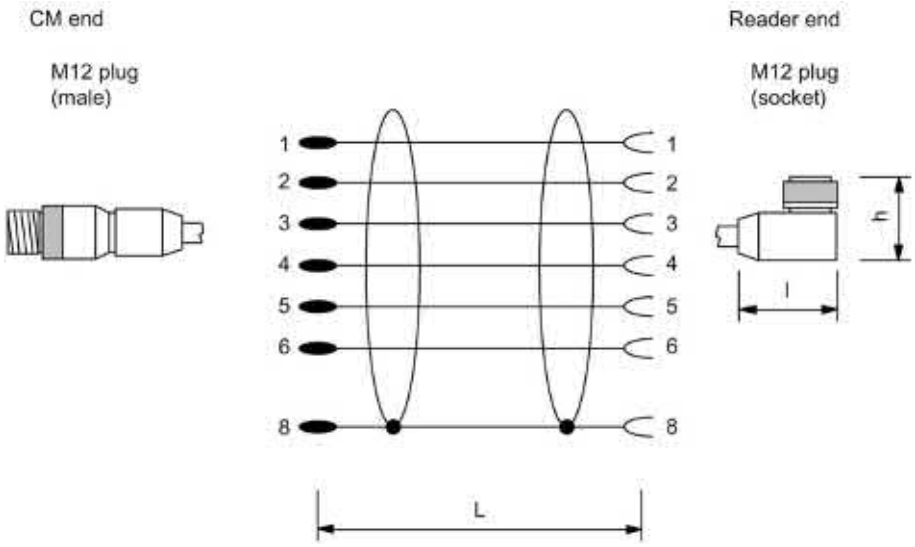

Figure A-12 Connecting cable between ASM 456, RF160C, RF170C, RF180C, RF18xC and RF2xxR reader (RS-422) with angled connector

Table A- 15 Ordering data

Length L	Article number
2 m	6GT2891-4JH20
5 m	6GT2891-4JH50
10 m	6GT2891-4JN10

The angled connector has a height of h = 29 mm and a length of l = 38 mm. Remember that due to the construction, the distance between the edge of the connector and the edge of the reader housing (H) is higher.

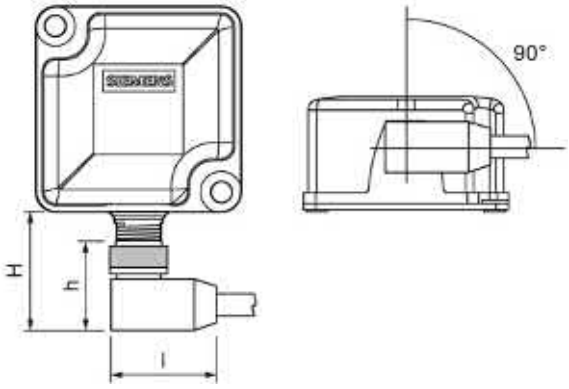

Figure A-13 Distance between connector edge and housing edge

The distance between the edge of the connector and the edge of the reader housing (H) is as follows: RF210R/RF220R = 33 mm, RF240R/RF260R = 36 mm and RF290R = 37 mm. If you look at the reader from below, the angled connector points 90° to the right. With the RF285R and RF290R readers the angle is approximately 135°.

A.3.2 Reader RF2xxR (RS-422) with ASM 475

Reader connection system

The connecting cable has a length of 2 m (standard) and 5 m. Extensions up to 1000 m are possible with the 6GT2891-4F… plug-in cables.

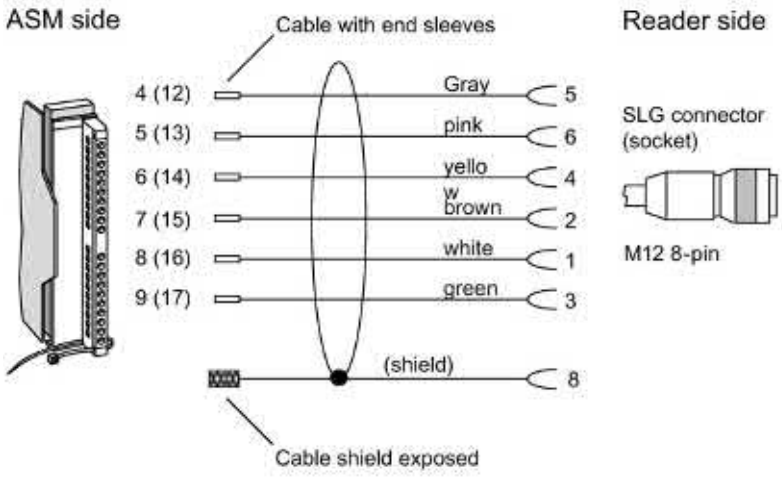

Figure A-14 Connecting cable between the ASM 475 and RF2xx reader (RS-422)

Table A- 16 Ordering data

Length L	Article number
2 m	6GT2891-4EH20
5 m	6GT2891-4EH50

A.3.3 Reader RF2xxR (RS-422) with RF120C

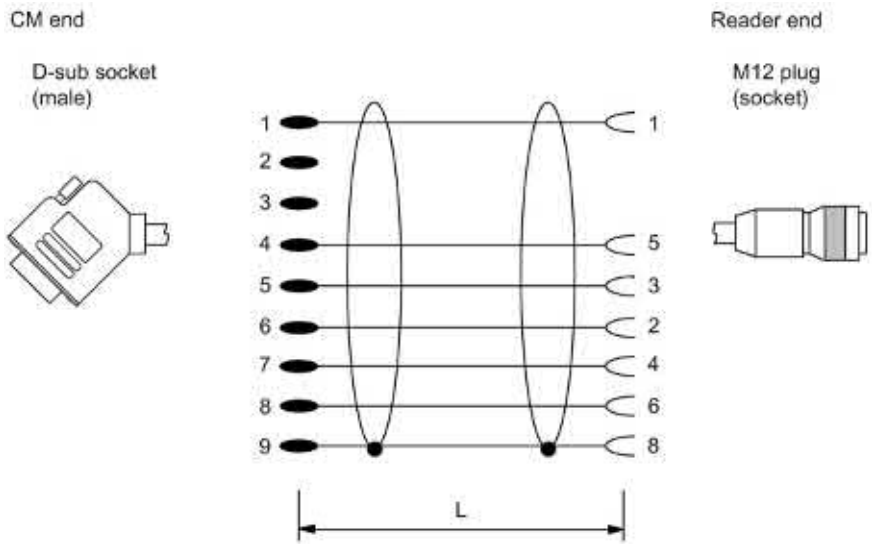

Figure A-15 Connecting cable between RF120C and RF2xxR reader (RS-422)

Table A- 17 Ordering data

Length L	Article number
2 m	6GT2091-4LH20
5 m	6GT2091-4LH50
10 m	6GT2091-4LN10

A.3.4 RF240R/RF260R/RF285R/RF290R (RS232) readers with PC

The connecting cables have a length of 5 m. The outgoing cable for the power supply has a length of 0.5 m.

With 4-pin power supply connector

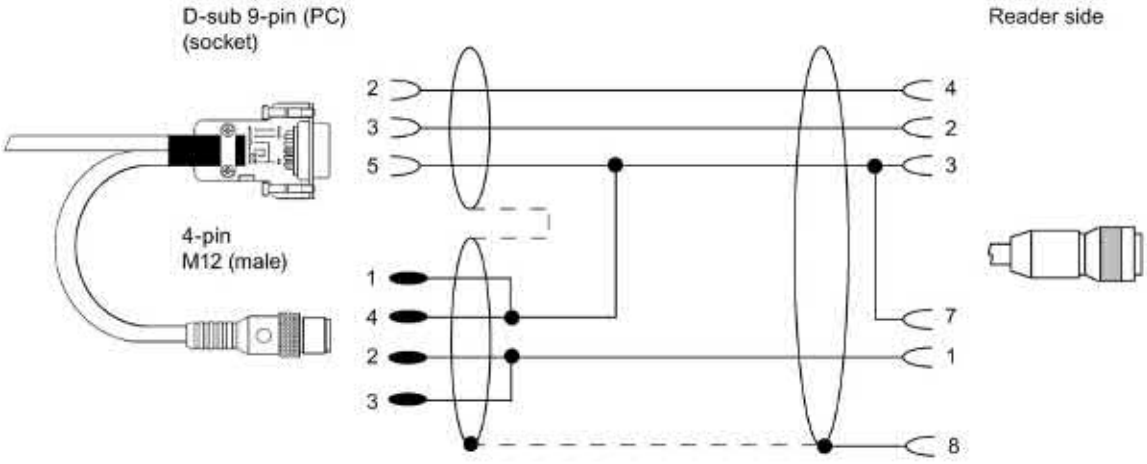

Figure A-16 Connecting cable between PC and RF240R/RF260R/RF285R/RF290R (RS232) with 4-pin power supply connector

Suitable power supply unit: e.g. wide-range power supply unit

With open ends for the power supply

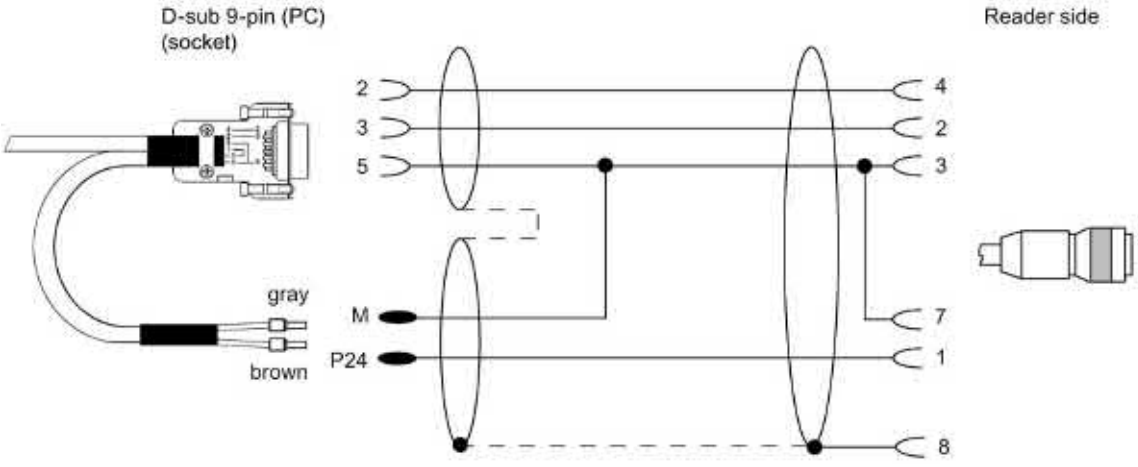

Figure A-17 Connecting cable between PC and RF240R/RF260R/RF285R/RF290R (RS232) with open ends for the power supply

Table A- 18 Ordering data connecting cable

	Article number
Connecting cable RS-232 with M12 male connector (4-pin), 5 m	6GT2891-4KH50
Connecting cable RS-232 with open ends (5 m)	6GT2891-4KH50-0AX0

A.3.5 RF285R/RF290R readers

Antenna connecting cable

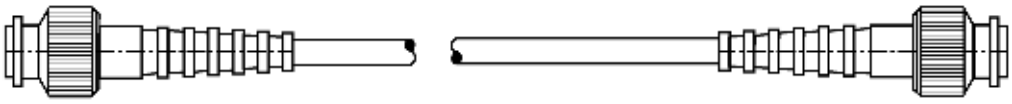

Figure A-18 ANT cable ↔ ANT Dx (3.3 m / 10.5 m)

Table A- 19 Ordering data

Length L	Article number
3.3 m	6GT2691-0CH33
10.5 m	6GT2691-0CN10

Antenna extension cable

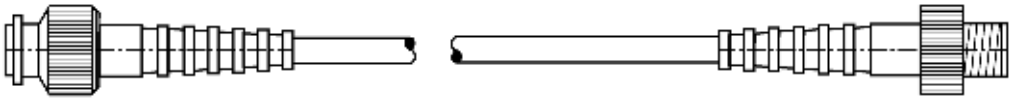

Figure A-19 Antenna extension cable (7.2 m)

Table A- 20 Ordering data

Length L	Article number
7.2 m	6GT2691-0DH72

A.4 Ordering data

RF200 components

Table A- 21 RF200 reader

Readers	Description	Article number
RF210R	• With RS-422 interface (3964R) • IP67 • Operating temperature: -25 °C ... +70 °C • Dimensions (L x Ø): 83 x 18 mm • with integrated antenna	6GT2821-1AC10
RF210M	• With RS-422 interface (3964R) • IP54 • Operating temperature: -20 °C ... +50 °C • Dimensions with handle (L x W x H) 195 x 26 x 140 mm • with integrated antenna	6GT2823-0AA00
RF220R	• With RS-422 interface (3964R) • IP67 • Operating temperature: -25 °C ... +70 °C • Dimensions (L x Ø): 83 x 30 mm • with integrated antenna	6GT2821-2AC10
RF240R	• With RS-422 interface (3964R) • IP67 • Operating temperature: -20 °C ... +70 °C • Dimensions (L x W x H): 50 x 50 x 30 mm • with integrated antenna	6GT2821-4AC10
RF240R	• With RS-232 interface (3964R) • IP67 • Operating temperature: -20 °C ... +70 °C • Dimensions (L x W x H): 50 x 50 x 30 mm • with integrated antenna	6GT2821-4AC11
RF240R	• With RS-232 interface (ASCII) • IP67 • Operating temperature: -20 °C ... +70 °C • Dimensions (L x W x H): 50 x 50 x 30 mm • with integrated antenna	6GT2821-4AC40

Readers	Description	Article number
RF250R	• With RS-422 interface (3964R) • IP67 • Operating temperature: -20 °C ... +70 °C • Dimensions (L x W x H): 50 x 50 x 30 mm • Reader with connections for external antennas ANT 1, ANT 3, ANT 8, ANT 12, ANT 18, ANT 30	6GT2821-5AC10
RF250R	• With RS-232 interface (ASCII) • IP67 • Operating temperature: -20 °C ... +70 °C • Dimensions (L x W x H): 50 x 50 x 30 mm • Reader with connections for external antennas ANT 1, ANT 3, ANT 8, ANT 12, ANT 18, ANT 30	6GT2821-5AC40
RF260R	• With RS-422 interface (3964R) • IP67 • Operating temperature: -20 °C ... +70 °C • Dimensions (L x W x H): 75 x 75 x 41 mm • with integrated antenna	6GT2821-6AC10
RF260R	• With RS-232 interface (3964R) • IP67 • Operating temperature: -20 °C ... +70 °C • Dimensions (L x W x H): 75 x 75 x 41 mm • with integrated antenna	6GT2821-6AC11
RF260R	• With RS-232 interface (ASCII) • IP67 • Operating temperature: -20 °C ... +70 °C • Dimensions (L x W x H): 75 x 75 x 41 mm • with integrated antenna	6GT2821-6AC40
RF280R	• With RS-422 interface (3964R) • IP67 • Operating temperature: -25 … +70 °C • Dimensions (L x W x H): 160 x 80 x 41 mm • with integrated antenna	6GT2821-8AC10
RF280R	• With RS-232 interface (ASCII) • IP67 • Operating temperature: -25 … +70 °C • Dimensions (L x W x H): 160 x 80 x 41 mm • with integrated antenna	6GT2821-8AC40

Readers	Description	Article number
RF285R	• with RS232 interface • IP65 • Operating temperature: -20 … +55 °C • Dimensions (L x W x H): 200 x 140 x 80 mm • Reader with connections for external antennas ANT D1, ANT D5 or ANT D6	6GT2821-7AC12
RF290R	• With RS-232 interface (Advanced protocol) and RS-422 interface (3964R) • IP65 • Operating temperature: -20 °C ... +55 °C • Dimensions (L x W x H): 200 x 140 x 80 mm • Long-range reader with the option of connecting external antennas ANT D1, ANT D5, ANT D6 or ANT D10	6GT2821-0AC12
RF210M	• IP54 • Operating temperature: -20 °C ... +50 °C • Dimensions (L x W x H): 195 x 26 x 140 mm • Mobile reader with integrated antenna	6GT2823-0AA00
RF350M	• IP54 • Operating temperature: -20 °C ... +55 °C • Dimensions (L x W x H): 250 x 90 x 47 mm • Mobile reader with integrated antenna	6GT2803-1BA00
RF350M	• IP54 • Operating temperature: -20 °C ... +55 °C • Dimensions (L x W x H): 250 x 90 x 47 mm • Mobile reader with connections for external antennas ANT 1, ANT 3, ANT 8, ANT 12, ANT 18 or ANT 30	6GT2803-1BA10

Table A- 22 ISO transponder

ISO transponder	Description	Article number
MDS D100	• IP68 • Memory size: 112 bytes of EEPROM user memory • Operating temperature: -25 °C ... +80 °C • Dimensions (L x W x H): 85.6 x 54 x 0.9 mm • Credit card format	6GT2600-0AD10
MDS D117	• IP68 • Memory size: 112 bytes of EEPROM user memory • Operating temperature: -25 °C ... +85 °C • Dimensions (Ø x H): 4 x 5 mm	6GT2600-0AG00
MDS D124	• IP68; IPx9K • Memory size: 112 bytes of EEPROM user memory • Operating temperature: -25 °C ... +180 °C • Dimensions (Ø x H): 27 (±0.2) x 4 (±0.2) mm	6GT2600-0AC10
MDS D126	• IP68 • Memory size: 112 bytes of EEPROM user memory • Operating temperature: -25 °C ... +85 °C • Dimensions (Ø x H): 50 x 3.6 mm • Round design with mounting hole	6GT2600-0AE00
MDS D127	• IP68; IPx9K • Memory size: 112 bytes of EEPROM user memory • Operating temperature: -25 °C ... +125 °C • Dimensions (Ø x H): M6 x 5 (±0.2) mm	6GT2600-0AF00
MDS D139	• IP68; IPx9K • Memory size: 112 bytes of EEPROM user memory • Operating temperature: up to +200 °C / +220 °C • Dimensions (Ø x H): 85 (±0.5) x 15 (-1.0) mm	6GT2600-0AA10
MDS D160	• IP68; IPx9K • Memory size: 112 bytes of EEPROM user memory • Operating temperature: -25 °C...+70 °C • Dimensions (Ø x H): 16 (±0.2) x 3.0 (±0.2) mm • Laundry tag for cyclic applications	6GT2600-0AB10
MDS D165	• IP65 • Memory size: 112 bytes of EEPROM user memory • Operating temperature: -25 °C ... +85 °C • Dimensions (L x W): 86 x 54 mm • Smartlabel (PET) in credit card format	6GT2600-1AB00-0AX0

ISO transponder	Description	Article number
MDS D200	• IP67 • Memory size: 256 bytes of EEPROM user memory • Operating temperature: -20 °C ... +60 °C • Dimensions (L x W x H): 86 x 54 x 0.8 mm • Credit card format	6GT2600-1AD00-0AX0
MDS D261	• IP65 • Memory size: 256 bytes of EEPROM user memory • Operating temperature: -25 °C ... +85 °C • Dimensions (L x W): 55 x 55 mm • Smartlabel (PET), small design	6GT2600-1AA00-0AX0
MDS D324	• IP67; IPx9K • Memory size: 992 bytes of EEPROM user memory • Operating temperature: -25 °C ... +125 °C • Dimensions (Ø x H): 27 (±0.2) x 4 (±0.2) mm	6GT2600-3AC00
MDS D339	• IP68; IPx9K • Memory size: 992 bytes of EEPROM user memory • Operating temperature: -25 °C ... +220 °C • Dimensions (Ø x H): 85 (±0.5) x 15 (-1.0) mm	6GT2600-3AA10
MDS D400	• IP67 • Memory size: 2000 bytes of FRAM user memory • Operating temperature: -25 °C ... +60 °C • Dimensions (L x W x H) 85.6 (±0.3) × 54 (±0.2) × 0.8 (±0.05) mm	6GT2600-4AD00
MDS D421	• IP67; IPx9K • Memory size: 2000 bytes of FRAM user memory • Operating temperature –25 °C ... +85 °C • Dimensions (Ø x H): 10 x 4.5 mm	6GT2600-4AE00
MDS D422	• IP68 • Memory size: 2000 bytes of FRAM user memory • Operating temperature: -25 °C ... +85 °C • Dimensions (Ø x H): M20 x 6 (±0.2) mm • Can be screwed into metal (flush-mounted)	6GT2600-4AF00
MDS D423	• IP68; IPx9K • Memory size: 2000 bytes of FRAM user memory • Operating temperature: -25 °C ... +85 °C • Dimensions (Ø x H): 30 (+0.2/-0.5) x 8 (-0.5) mm	6GT2600-4AA00

ISO transponder	Description	Article number
MDS D424	• IP67; IPx9K • Memory size: 2000 bytes of FRAM user memory • Operating temperature: -25 °C ... +125 °C • Dimensions (Ø x H): 27 (±0.2) x 4 (±0.2) mm	6GT2600-4AC00
MDS D425	• IP68; IPx9K • Memory size: 2000 bytes of FRAM user memory • Operating temperature: -25 °C ... +85 °C • Dimensions (Ø x H): 24 X 10 mm; M6 thread • Screw transponder	6GT2600-4AG00
MDS D426	• IP68 • Memory size: 2000 bytes of FRAM user memory • Operating temperature: -25 °C ... +85 °C • Dimensions (Ø x H): 50 x 3.6 mm • Round design with mounting hole	6GT2600-4AH00
MDS D428	• IP68; IPx9K • Memory size: 2000 bytes of FRAM user memory • Operating temperature: -25 °C ... +85 °C • Dimensions (Ø x H): 18(±1) x 20(±1) mm (without thread); thread M8	6GT2600-4AK00-0AX0
MDS D460	• IP67; IPx9K • Memory size: 2000 bytes of FRAM user memory • Operating temperature: -25 °C ... +85 °C • Dimensions (Ø x H): 16 (±0.2) x 3.0 (±0.2) mm	6GT2600-4AB00
MDS D521	• IP67; IPx9K • Memory size: 8192 bytes of FRAM user memory • Operating temperature –25 °C ... +85 °C • Dimensions (Ø x H): 10 x 4.5 mm	6GT2600-5AE00
MDS D522	• IP68 • Memory size: 8192 bytes of FRAM user memory • Operating temperature: -25 °C ... +85 °C • Dimensions (Ø x H): M20 x 6 (±0.2) mm • Can be screwed into metal (flush-mounted)	6GT2600-5AF00
MDS D522 Special variants	• IP68 • Memory size: 8192 bytes of FRAM user memory • Operating temperature: -25 °C ... +85 °C • Dimensions (Ø x H): 18 (+0.1) x 5.2 mm • Can be clipped into metal (flush-mounted)	6GT2600-5AF00-0AX0

ISO transponder	Description	Article number
MDS D524	• IP67 • Memory size: 8192 bytes of FRAM user memory • Operating temperature: -25 °C ... +85 °C • Dimensions (Ø x H): 27 (±0.2) x 4 (±0.2) mm	6GT2600-5AC00
MDS D525	• IP68; IPx9K • Memory size: 8192 bytes of FRAM user memory • Operating temperature: -25 °C ... +85 °C • Dimensions (Ø x H): 24 X 10 mm; M6 thread • Screw transponder	6GT2600-5AG00
MDS D526	• IP67; IPx9K • Memory size: 8192 bytes of FRAM user memory • Operating temperature: -25 °C ... +85 °C • Dimensions (Ø x H): 50 x 3.6 mm • Round design with mounting hole	6GT2600-4AH00
MDS D528	• IP68; IPx9K • Memory size: 8192 bytes of FRAM user memory • Operating temperature: -25 °C ... +85 °C • Dimensions (Ø x H): 18(±1) x 20(±1) mm (without thread); thread M8	6GT2600-5AK00
MDS D560	• IP68; IPx9K • Memory size: 8192 bytes of FRAM user memory • Operating temperature: -25 °C ... +85 °C • Dimensions (Ø x H): 16 (±0.2) x 3 (±0.2) mm	6GT2600-5AB00

Table A- 23 Communication modules/interface modules

ASM/ communications module	Description	Article number
ASM 456	ASM 456 for PROFIBUS DP-V1 max. 2 readers connectable	6GT2002-0ED00
ASM 475	ASM 475 for SIMATIC S7 max. 2 RF2xxR readers with RS-422 can be connected in parallel without a front connector	6GT2002-0GA10
RF120C	Communications module RF120C for SIMATIC S7-1200	6GT2002-0LA00
RF160C	Communications module RF160C for PROFIBUS DP V0 max. 2 readers connectable	6GT2002-0EF00
RF170C	RF170C communications module	6GT2002-0HD00
	RF170C connecting block	6GT2002-1HD00
RF180C	RF180C communications module max. 2 SLGs or readers can be connected	6GT2002-0JD00
	Connecting block M12, 7/8" (5-pin)	6GT2002-1JD00
	Connecting block M12, 7/8" (4-pin)	6GT2002-4JD00
	Push-pull connecting block, RJ-45	6GT2002-2JD00
RF182C	RF182C communication module Max. 2 SLGs or readers can be connected	6GT2002-0JD10
	Connecting block M12, 7/8" (5-pin)	6GT2002-1JD00
	Connecting block M12, 7/8" (4-pin)	6GT2002-4JD00
	Push-pull connecting block, RJ-45	6GT2002-2JD00
RF185C	Communication module RF185C for PROFINET IO max. 1 reader connectable	6GT2002-0JE10
RF186C	Communication module RF185C for PROFINET IO max. 2 readers connectable	6GT2002-0JE20
RF188C	Communication module RF185C for PROFINET IO max. 4 readers connectable	6GT2002-0JE40
RFID 181EIP	RF182C communications module max. 2 SLGs or readers can be connected	6GT2002-0JD20
	Connecting block M12, 7/8" (5-pin)	6GT2002-1JD00
	Connecting block M12, 7/8" (4-pin)	6GT2002-4JD00
	Push-pull connecting block, RJ-45	6GT2002-2JD00

Table A- 24 Antennas

Antennas	Description	Article number
ANT 1	• IP67 • Operating temperature: -25 °C ... +70 °C • Dimensions (L x W x H): 75 x 75 x 20 mm • incl. one integrated antenna connecting cable 3 m	6GT2398-1CB00
ANT 3	• IP67 • Operating temperature: -25 °C ... +70 °C • Dimensions (L x W x H): 50 x 28 x 10 mm • without antenna connecting cable	6GT2398-1CD30-0AX0
	• incl. one plug-in antenna connecting cable 3 m	6GT2398-1CD40-0AX0
ANT 3 S	• IP67 • Operating temperature: -25 °C ... +70 °C • Dimensions (L x W x H): 50 x 28 x 10 mm • without antenna connecting cable	6GT2398-1CD50-0AX0
	• incl. one plug-in antenna connecting cable 3 m	6GT2398-1CD60-0AX0
ANT 8	• IP67 • Operating temperature: -25 °C ... +70 °C • Dimensions (Ø x L): M8 x 40 mm • without antenna connecting cable	6GT2398-1CF00
	• incl. one plug-in antenna connecting cable 3 m	6GT2398-1CF10
ANT 12	• IP67 • Operating temperature: -25 °C ... +70 °C • Dimensions (Ø x L): M12 x 40 mm • incl. one integrated antenna connecting cable 0.6 m	6GT2398-1CC10
	• incl. one integrated antenna connecting cable 3 m	6GT2398-1CC00
ANT 12 (stainless steel variant)	• IP67 with inserted cable • Operating temperature: -25 °C ... +70 °C • Dimensions (Ø x L): M12 x 40 mm • without antenna connecting cable	6GT2398-1DC00
	• incl. one plug-in antenna connecting cable 3 m	6GT2398-1DC10
ANT 18	• IP67 (front) • Operating temperature: -25 °C ... +70 °C • Dimensions (Ø x L): M18 x 55 mm • incl. one integrated antenna connecting cable 0.6 m	6GT2398-1CA10
	• incl. one integrated antenna connecting cable 3 m	6GT2398-1CA00

Antennas	Description	Article number
ANT 18 (stainless steel variant)	• IP67 with inserted cable • Operating temperature: -20 °C ... +70 °C • Dimensions (Ø x L): M18 x 40 mm • without antenna connecting cable	6GT2398-1DA00
	• incl. one plug-in antenna connecting cable 3 m	6GT2398-1DA10
ANT 30	• IP67 • Operating temperature: -25 °C ... +70 °C • Dimensions (Ø x L): M30 x 58 mm • incl. one integrated antenna connecting cable 3 m	6GT2398-1CD00
ANT 30 (stainless steel variant)	• IP67 with inserted cable • Operating temperature: -20 °C ... +70 °C • Dimensions (Ø x L): M30 x 40 mm • without antenna connecting cable	6GT2398-1DD00
	• incl. one plug-in antenna connecting cable 3 m	6GT2398-1DD10
ANT D1	• IP67 • Operating temperature: -25 °C ... +55 °C • Dimensions (L x W x H): 75 x 75 x 20 mm • incl. one plug-in antenna connecting cable 3.3 m	6GT2698-5AC00
ANT D5	• IP65 • Operating temperature: -20 °C ... +55 °C • Dimensions (L x W x H): 380 x 380 x 110 mm • incl. one plug-in antenna connecting cable 3.3 m	6GT2698-5AA10
ANT D6	• IP65 • Operating temperature: -20 °C ... +55 °C • Dimensions (L x W x H): 580 x 480 x 110 mm • incl. one plug-in antenna connecting cable 3.3 m	6GT2698-5AB00
ANT D10	• IP65 • Operating temperature: -20 °C ... +55 °C • Dimensions (L x W x H): 1150 x 365 x 115 mm • incl. one plug-in antenna connecting cable 3.3 m	6GT2698-5AF00

Accessories

Table A- 25 Reader accessories

Readers	Accessories	Article number
RF285R / RF290R	Adapter for mounting on a DIN rail (pack of 3)	6GK5798-8ML00-0AB3

Table A- 26 ISO transponder accessories

Transponder	Accessories	Article number
MDS D100 / D200 / D400	Spacer	6GT2190-0AA00
	Fixing pocket	6GT2190-0AB00
	Securing pocket (cannot be mounted directly on metal)	6GT2390-0AA00
MDS D139 / D339	Spacer (Ø x H): 85 x 30 mm	6GT2690-0AA00
	Quick change holder (Ø x H): 22 x 60 mm	6GT2690-0AH00
	Quick change holder (Ø x H): 22 x 47 mm	6GT2690-0AH10
MDS D124 / D324 / D424 / D524	Spacer (Ø x H): 36 x 22 mm	6GT2690-0AK00
MDS D126 / D426 / D526	Spacer (Ø x H): 59 x 30 mm	6GT2690-0AL00
MDS D160 / D460 / D560	Spacer (Ø x H): 20 x 14.3 mm	6GT2690-0AG00
	Corner mounting bracket (H x W x D): 27.5 x 19 x 18 mm	6GT2690-0AN00

Table A- 27 Antenna accessories

Antennas	Accessories		Article number
ANT 3 / 3 S / 8 ANT 12 / 18 / 30 Edel-stahl-Varinate	Antenna connecting cable with M8 plug (with angled plug), suitable for cable carriers, 3 m		6GT2391-0AH30
ANT D1 / D5 / D6 / D10	Antenna splitter (incl. one antenna connecting cable 3.3 m)		6GT2690-0AC00
	Antenna cable	3.3 m	6GT2691-0CH33
		10.5 m	6GT2691-0CN10
	Antenna cable extension	7.2 m	6GT2691-0DH72
ANT D6	Cover		6GT2690-0AD00

Table A- 28 Accessories - connecting cable RF200 reader ↔ PC

Connecting cable	Accessories		Article number
All readers with RS232 interface and PC	Connecting cable RS-232 with M12 male connector (4-pin), 5 m		6GT2891-4KH50
	Connecting cable RS-232 with open ends, 5 m		6GT2891-4KH50-0AX0
RF285R / RF290R	Antenna cable	3.3 m	6GT2691-0CH33
		10.5 m	6GT2691-0CN10
	Antenna cable extension	7.2 m	6GT2691-0DH72

Table A- 29 Accessories - connecting cable communications module/ASM ↔ reader

Connecting cables	Description Length	Article number
ASM 456 / RF160C / RF170C / RF180C / RF18xC and RF2xxR reader (RS-422)	2 m	6GT2891-4FH20
	5 m	6GT2891-4FH50
	10 m	6GT2891-4FN10
	20 m	6GT2891-4FN20
	50 m	6GT2891-4FN50
ASM 456 / RF160C / RF170C / RF180C / RF18xC and RF2xxR reader (RS-422) with angled connector	2 m	6GT2891-4JH20
	5 m	6GT2891-4JH50
	10 m	6GT2891-4JN10
ASM 475 and RF2xxR reader (RS-422)	2 m	6GT2891-4EH20
	5 m	6GT2891-4EH50
RF120C and reader RF3xxR (RS-422)	2 m	6GT2091-4LH20
	5 m	6GT2091-4LH50
	10 m	6GT2091-4LN10

Table A- 30 RFID accessories, general

RFID general	Article number
DVD "Ident Systems Software & Documentation"	6GT2080-2AA20
Wide-range power supply unit for SIMATIC RF systems (100 - 240 VAC / 24 VDC / 3 A) with country-specific power cable/plug, 2 m	EU: 6GT2898-0AC00
	UK: 6GT2898-0AC10
	US: 6GT2898-0AC20
24 V connecting cable, 5 m	6GT2491-1HH50
M12 connector, 4-pin for wide range power supply unit, pack of 3	6GK1907-0DB10-6AA3

A.5 Service & Support

Industry Online Support

In addition to the product documentation, the comprehensive online information platform of Siemens Industry Online Support at the following Internet address:
Link 1: (https://support.industry.siemens.com/cs/de/en/)

Apart from news, there you will also find:

- Project information: Manuals, FAQs, downloads, application examples etc.
- Contacts, Technical Forum
- The option submitting a support query:
  link 2: (https://support.industry.siemens.com/My/ww/en/requests)
- Our service offer:

  Right across our products and systems, we provide numerous services that support you in every phase of the life of your machine or system - from planning and implementation to commissioning, through to maintenance and modernization.

You will find contact data on the Internet at the following address:
Link 3: (http://w3.siemens.com/aspa_app)

RFID homepage

For general information about our identification systems, visit RFID homepage (http://w3.siemens.com/mcms/identification-systems/).

Online catalog and ordering system

The online catalog and the online ordering system can also be found on the Industry Mall Homepage (https://mall.industry.siemens.com).

SITRAIN - Training for Industry

The training offer includes more than 300 courses on basic topics, extended knowledge and special knowledge as well as advanced training for individual sectors - available at more than 130 locations. Courses can also be organized individually and held locally at your location.

You will find detailed information on the training curriculum and how to contact our customer consultants at the following Internet address:

Link: (http://sitrain.automation.siemens.com/sitrainworld/)