Prevention of interference by optimum configuration

Good interference suppression can be achieved by installing SIMATIC PLCs on conducting mounting plates (unpainted). When setting up the control cabinet, interference can be prevented easily by observing certain guidelines. Power components (transformers, drive units, load power supply units) should be arranged separately from the control components (relay control unit, SIMATIC S7).

As a rule:

- The effect of the interference decreases as the distance between the interference source and interference sink increases.
- The interference can be further decreased by installing grounded shielding plates.
- The load connections and power cables should be installed separately from the signal cables with a minimum clearance of 10 cm.

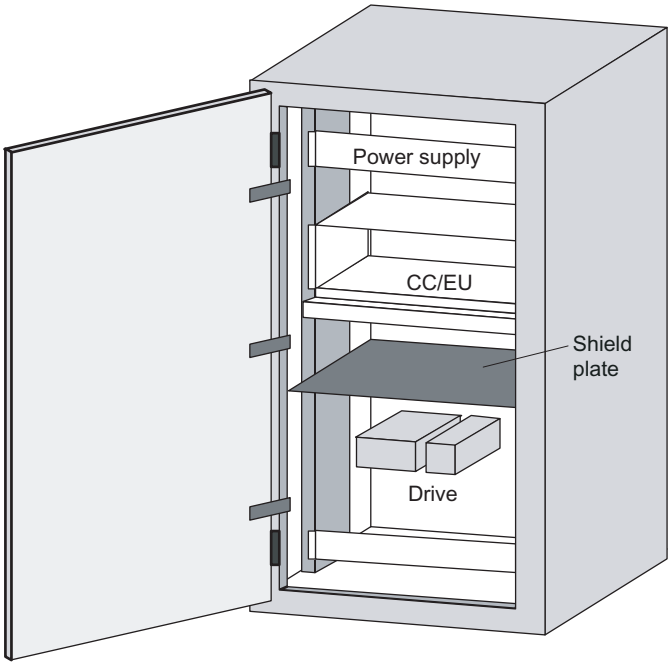

Figure 4-24 Prevention of interference by optimum configuration

Filtering of the supply voltage

External interference from the mains can be prevented by installing line filters. Correct installation is extremely important, in addition to appropriate dimensioning. It is essential that the line filter is mounted directly at the cabinet inlet. As a result, interference is filtered promptly at the inlet, and is not conducted through the cabinet.

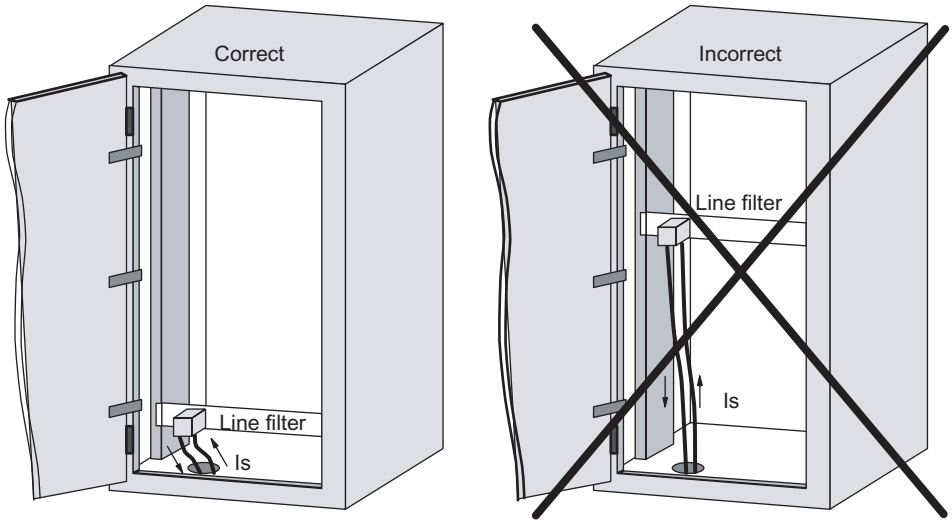

Ic = interference current

Figure 4-25 Filtering of the supply voltage

4.6.6 Prevention of interference sources

A high level of immunity to interference can be achieved by avoiding interference sources. All switched inductances are frequent sources of interference in plants.

Suppression of inductance

Relays, contactors, etc. generate interference voltages and must therefore be suppressed using one of the circuits below.

Even with small relays, interference voltages of up to 800 V occur on 24 V coils, and interference voltages of several kV occur on 230 V coils when the coil is switched. The use of freewheeling diodes or RC circuits prevents interference voltages and thus stray interference on conductors installed parallel to the coil conductor.

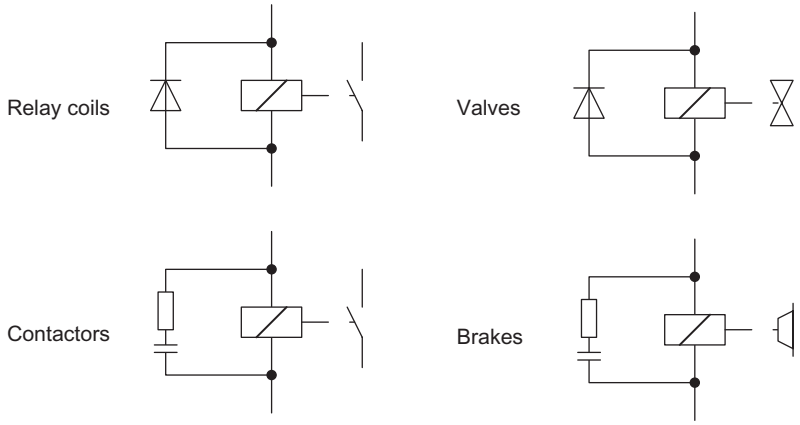

Figure 4-26 Suppression of inductance

Note

All coils in the cabinet should be suppressed. The valves and motor brakes are frequently forgotten. Fluorescent lamps in the control cabinet should be tested in particular.

4.6.7 Equipotential bonding

Potential differences between different parts of a plant can arise due to the different design of the plant components and different voltage levels. If the plant components are connected across signal cables, transient currents flow across the signal cables. These transient currents can corrupt the signals.

Proper equipotential bonding is thus essential.

- The equipotential bonding conductor must have a sufficiently large cross section (at least 10 mm^2).
- The distance between the signal cable and the associated equipotential bonding conductor must be as small as possible (antenna effect).
- A fine-strand conductor must be used (better high-frequency conductivity).
- When connecting the equipotential bonding conductors to the centralized equipotential bonding strip (EBS), the power components and non-power components must be combined.
- The equipotential bonding conductors of the separate modules must lead directly to the equipotential bonding strip.

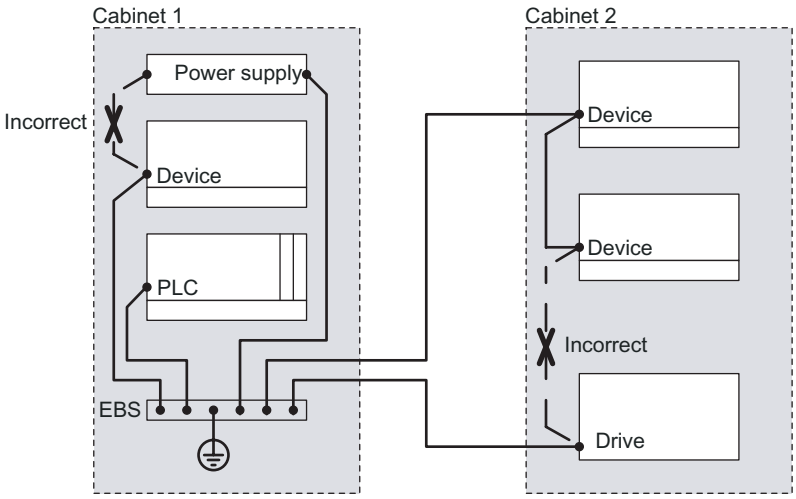

Figure 4-27 Equipotential bonding (EBS = Equipotential bonding strip)

The better the equipotential bonding in a plant, the smaller the chance of interference due to fluctuations in potential.

Equipotential bonding should not be confused with protective earthing of a plant. Protective earthing prevents the occurrence of excessive shock voltages in the event of equipment faults whereas equipotential bonding prevents the occurrence of differences in potential.

4.6.8 Cable shielding

Signal cables must be shielded in order to prevent coupling of interference.

The best shielding is achieved by installing the cables in steel tubes. However, this is only necessary if the signal cable is routed through an environment prone to particular interference. It is usually adequate to use cables with braided shields. In either case, however, correct connection is vital for effective shielding.

Note

An unconnected or incorrectly connected shield has no shielding effect.

As a rule:

- For analog signal cables, the shield should be connected at one end on the receiver side
- For digital signals, the shield should be connected to the enclosure at both ends
- Since interference signals are frequently within the HF range (> 10 kHz), a large-area HF-proof shield contact is necessary

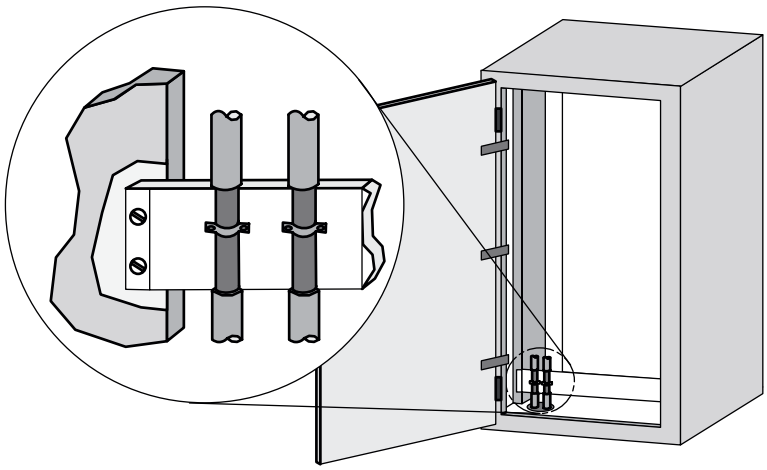

Figure 4-28 Cable shielding

The shielding bus should be connected to the control cabinet enclosure in a manner allowing good conductance (large-area contact) and must be situated as close as possible to the cable inlet. The cable insulation must be removed and the cable clamped to the shielding bus (high-frequency clamp) or secured using cable ties. Care should be taken to ensure that the connection allows good conductance.

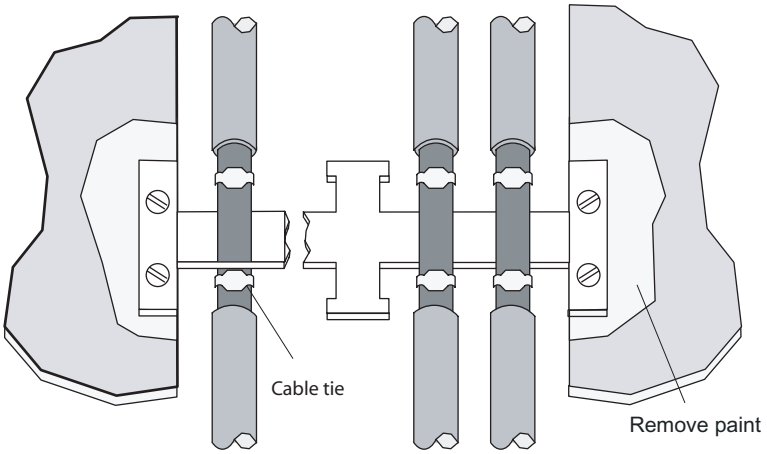

Figure 4-29 Connection of shielding bus

The shielding bus must be connected to the PE busbar.

If shielded cables have to be interrupted, the shield must be continued via the corresponding connector housing. Only suitable connectors may be used for this purpose.

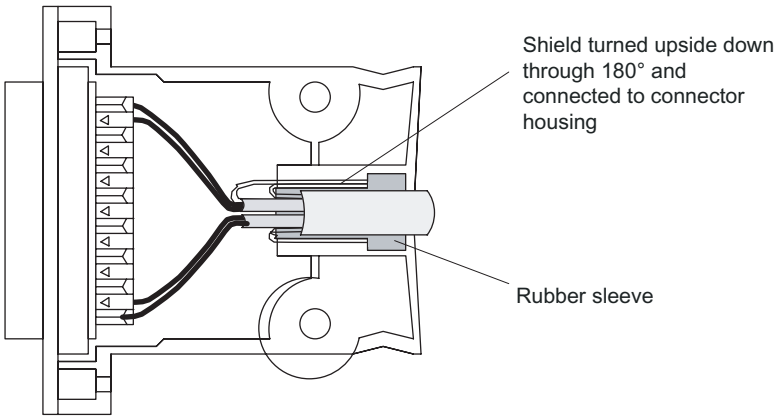

Figure 4-30 Interruption of shielded cables

If intermediate connectors, which do not have a suitable shield connection, are used, the shield must be continued by fixing cable clamps at the point of interruption. This ensures a large-area, HF-conducting contact.

Readers 5

5.1 Overview

The reader ensures inductive communication with the transponders, and handles the serial connection to the communication modules/interface modules and 8xIQ-Sense module.

Communication between the transponder and reader takes place over inductive alternating fields.

The transmittable data volume between reader and transponder depends on:

- the speed at which the transponder moves through the transmission window of the reader.
- the length of the transmission window.
- the transponder type (FRAM, EEPROM).

5.2 RF310R with IQ-Sense interface

5.2.1 Features

Reader RF310R	Features	
	Design	(1) IQ-Sense interface (2) Operating indicator
	Field of application	Identification tasks on small assembly lines in harsh industrial environments
	Read/write distance to transponder	max. 30 mm
	Data transmission rate	• Read: approx. 50 bytes/s • Write: approx. 40 bytes/s

5.2.2 Display elements of the RF310R reader with IQ-Sense interface

Table 5-1 Display elements of the reader

Color	Meaning
Green	Operating voltage available
yellow	Transponder present
red	Errors

5.2.3 Ensuring reliable data exchange

The "center point" of the transponder must be situated within the transmission window.

5.2.4 Metal-free area

The RF310R can be flush-mounted in metal. Please allow for a possible reduction in the field data values.

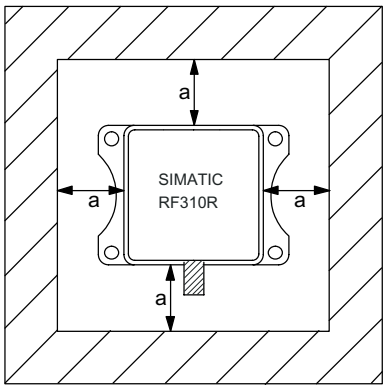

Figure 5-1 Metal-free area for RF310R

To avoid any impact on the field data, the distance a should be ≥ 20 mm.

5.2.5 Minimum distance between RF310R readers

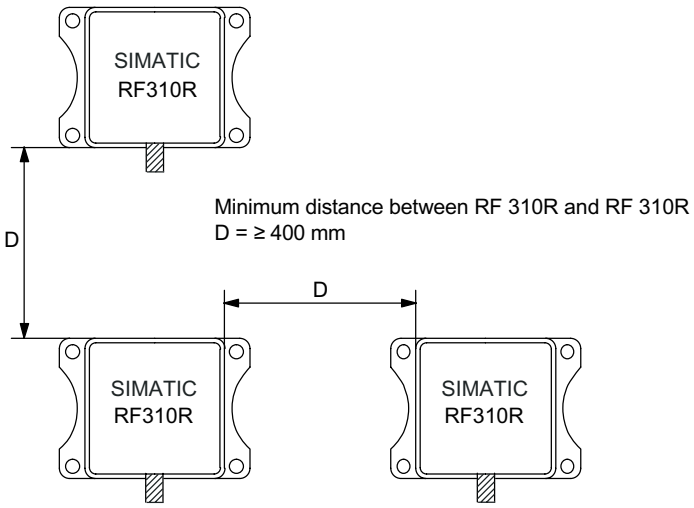

Figure 5-2 Minimum distance between RF310R readers

5.2.6 Technical data for RF310R reader with IQ-Sense interface

Table 5-2 Technical data for RF310R reader with IQ-Sense interface

Inductive interface to the transponder Transmission frequency for power/data	 13.56 MHz
Interface to SIMATIC S7-300 Required master module RFID channels (RF310R) Mixed operation with other profiles	IQ-Sense, 2-wire non-polarized 8-IQ-Sense (6ES7 338-7XF00-0AB0) max. 2 per master module, max. 4 Opto-BEROs, 1x SIMATIC RF310R
Cable length between reader and communication module	Max. 50 m (unshielded cable)
Read/write distances of reader	See RF310R field data
Minimum distance between two RF310R readers	≥ 400 mm
Data transfer rate for read/write device Reading Writing	 Approx. 50 bytes/s Approx. 40 bytes/s
Passing speed Reading Writing	 Approx. 0.8 m/s (2 bytes) Approx. 0.8 m/s (2 bytes)
Function	Read, write, initialize transponder
Multi-tag	no
Voltage supply	via IQ-Sense master module 24 V DC
Display elements	2-color LED (operating voltage, presence, error)
Plug connector	M12 (4-pin)
Enclosure Dimensions (in mm) Color Material	 55 x 75 x 30 (without M12 enclosure connector) Anthracite Plastic PA 12
Fixing	4 x M5 screws
Ambient temperature during operations during transport and storage	 -25°C to +70°C -40°C to +85°C
Degree of protection to EN 60529 Shock to EN 60 721-3-7 Class 7 M2 Overall shock response spectrum, Type II Vibration to EN 60 721-3-7 Class 7M2	IP65 50 g 1 g (9 to 200 Hz) 1.5 g (200 to 500 Hz)
Weight	Approx. 200 g
MTBF (Mean Time Between Failures) in years	153,5
Approvals	Radio to R&TTE guidelines EN 300 330, EN 301 489, CE, FCC

5.2.7 FCC information

Siemens SIMATIC RF300 with IQ-Sense interface

FCC ID: NXW-RF310R-IQ

This device complies with Part 15 of the FCC Rules. Operation is subject to the following two conditions:

(1) This device may not cause harmful interference.

(2) This device must accept any interference received, including interference that may cause undesired operation.

Caution

Any changes or modifications not expressly approved by the party responsible for compliance could void the user's authority to operate the equipment.

5.2.8 Ordering data of RF310R with IQ-Sense interface

RF310R	Order No.
With IQ-Sense interface for ET 200M to SIMATIC S7-300 IP65, -25° to +70°C, 71 x 75 x 30 (L x W x H in mm), with integrated antenna, max. limit distance: 30 mm (depending on transponder)	6GT2801-0AA00

5.2.9 Dimension drawing

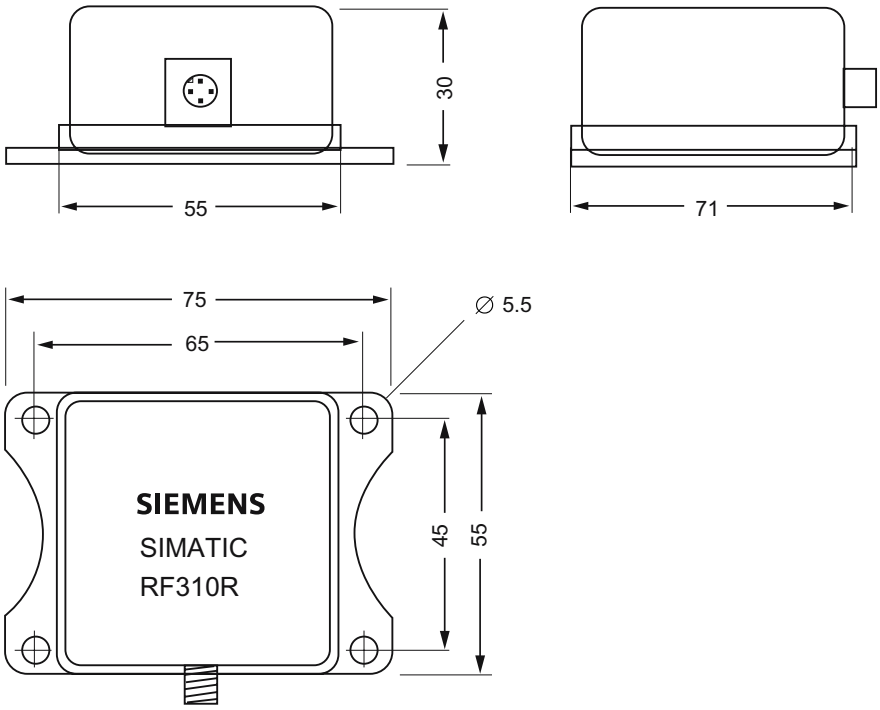

Figure 5-3 Dimension drawing for RF310R

5.3 RF310R with RS 422 interface

5.3.1 Features

Reader RF310R	Features	
	Structure	(1) RS 422 interface (2) Operating indicator
	Field of application	Identification tasks on small assembly lines in harsh industrial environments
	Read/write distance to transponder	max. 30 mm
	Data transmission rate	• Read: approx. 3100 bytes/s • Write: approx. 3100 bytes/s

5.3.2 Display elements of the RF310R reader with RS 422 interface

Table 5-3 Display elements of the reader

Color	Meaning
Green	Operating voltage available
yellow	Transponder present
red	Errors

5.3.3 Ensuring reliable data exchange

The "center point" of the transponder must be situated within the transmission window.

5.3.4 Metal-free area

The RF310R can be flush-mounted in metal. Please allow for a possible reduction in the field data values.

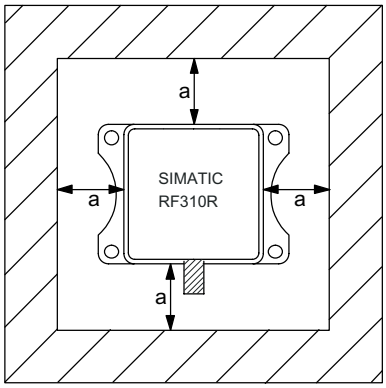

Figure 5-4 Metal-free area for RF310R

To avoid any impact on the field data, the distance a should be ≥ 20 mm.

5.3.5 Minimum distance between RF310R readers

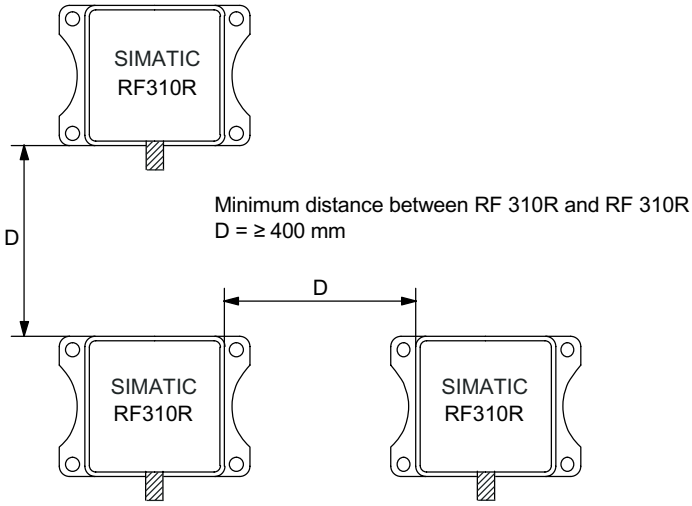

Figure 5-5 Minimum distance between RF310R readers

5.3.6 Technical data of the RF310R reader with RS 422 interface

Table 5-4 Technical data of the RF310R reader with RS 422 interface

Inductive interface to the transponder Transmission frequency for power/data	 13.56 MHz
Antenna	Integrated
Interface to communication module	RS 422 (3964R protocol)
Baud rate	19200 baud, 57600 baud, 115200 baud
Cable length between reader and communication module	Max. 120 m Data cable length max. 1000 m (shielded cable)
Read/write distances of reader	See RF310R field data
Minimum distance between two RF310R readers	≥ 400 mm
Maximum data transfer rate from reader to transponder (Tag) Reading Writing	 Approx. 3100 bytes/s Approx. 3100 bytes/s
Functions	Initialize/read/write transponder Scan status and diagnostics information Switch antenna on/off Repeat command Scan transponder serial numbers
Voltage supply	24 V DC, 30 mA typ.
Display elements	2-color LED (operating voltage, presence, error)
Plug connector	M12 (8-pin)
Enclosure Dimensions (in mm) Color Material	 55 x 75 x 30 (without M12 device connector) Anthracite Plastic PA 12
Fixing	4 x M5 screws
Ambient temperature during operations during transport and storage	 -25 °C to +70 °C -40 °C to +85 °C
Degree of protection to EN 60529 Shock to EN 60 721-3-7 Class 7 M2 Overall shock response spectrum, Type II Vibration to EN 60 721-3-7 Class 7 M2	IP65 50 g 1 g (9 to 200 Hz) 1.5 g (200 to 500 Hz)
Weight	Approx. 200 g
MTBF (Mean Time Between Failures) in years	169,9
Approvals	Radio to R&TTE guidelines EN 300 330, EN 301489, CE, FCC

5.3.7 FCC information

Siemens SIMATIC RF310R with RS 422 interface

FCC ID: NXW-RF310R

This device complies with Part 15 of the FCC rules. Operation is subject to the following two conditions:

(1) This device may not cause harmful interference.

(2) This device must accept any interference received, including interference that may cause undesired operation.

Caution

Any changes or modifications not expressly approved by the party responsible for compliance could void the user's authority to operate the equipment.

5.3.8 Ordering data for RF310R with RS 422 interface

RF310R	Order No.
With RS 422 interface (3964R) for ASM 475/452/456/473 (S7-300, PROFIBUS) IP 65, -25 °C to +70 °C, 55 x 75 x 30 (L x B x H in mm), with integrated antenna, max. limit distance 30 mm (depending on transponder type)	6GT2801-1AA10

5.3.9 Dimension drawing

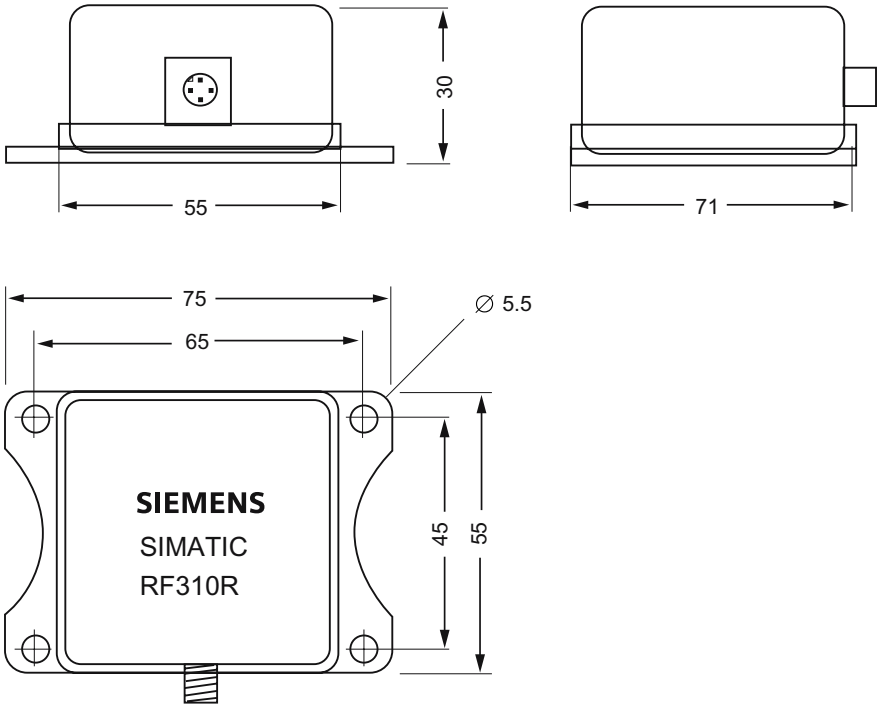

Figure 5-6 Dimension drawing for RF310R

5.4 RF340R

5.4.1 Features

Reader RF340R	Features	
	Design	(1) RS 422 interface (2) Operating indicator
	Application	Identification tasks on assembly lines in harsh industrial environments
	Read/write distance to transponder	max. 60 mm
	Data transmission rate	• Read: approx. 3,100 bytes/s • Write: approx. 3,100 bytes/s

5.4.2 Display elements of the RF340R reader

Table 5-5 Display elements of the reader

Color	Meaning
Green	Operating voltage available
yellow	Transponder present
red	Errors

5.4.3 Ensuring reliable data exchange

The "center point" of the transponder must be situated within the transmission window.

5.4.4 Metal-free area

The RF340R can be flush-mounted in metal. Please allow for a possible reduction in the field data values.

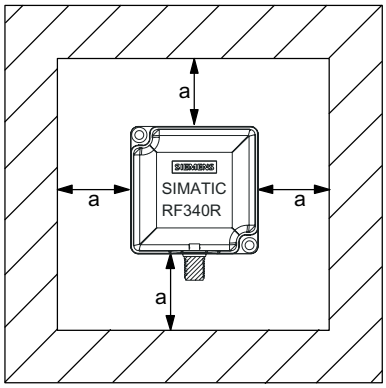

Figure 5-7 Metal-free area for RF340R

To avoid any impact on the field data, the distance a should be ≥ 20 mm.

5.4.5 Minimum distance between RF340R readers

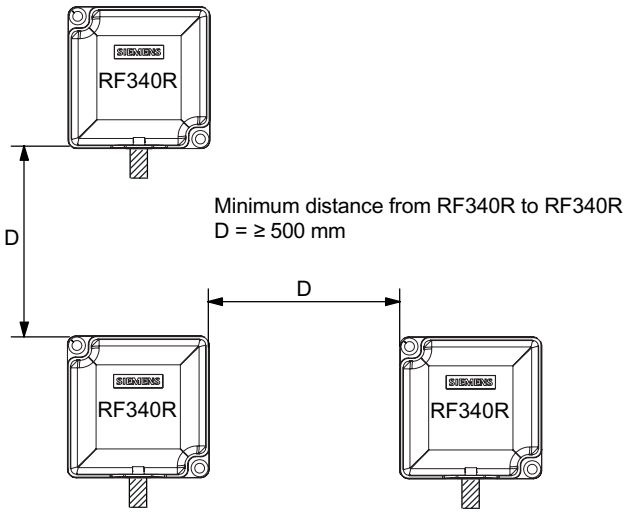

Figure 5-8 Minimum distance between RF340R readers

5.4.6 Technical data of the RF340R reader

Table 5-6 Technical data of the RF340R reader

Inductive interface to the transponder Transmission frequency for power/data	 13.56 MHz
Antenna	Integrated
Interface to communication module	RS 422 (3964R protocol)
Baud rate	19200 baud, 57600 baud, 115200 baud
Cable length between reader and communication module	Max. 120 m Data cable length max. 1000 m (shielded cable)
Read/write distances of reader	See RF340R field data
Minimum distance between two RF340R readers	≥ 500 mm
Maximum data transfer rate reader - transponder (tag) Reading Writing	 Approx. 3100 bytes/s Approx. 3100 bytes/s
Functions	Initialize/read/write transponder Scan status and diagnostics information Switch antenna on/off Repeat command Scan transponder serial numbers
Voltage supply	24 V DC, 110 mA typ.
Display elements	2-color LED (operating voltage, presence, error)
Plug connector	M12 (8-pin)
Enclosure Dimensions (in mm) Color Material	 75 x 75 x 40 (without M12 device connector) Anthracite Plastic PA 12
Fixing	2 x M5 screws
Ambient temperature during operations during transport and storage	 -25 °C to +70 °C -40 °C to +85 °C
Degree of protection to EN 60529 Shock to EN 60 721-3-7 Class 7 M2 Overall shock response spectrum, Type II Vibration to EN 60 721-3-7 Class 7 M2	IP65 50 g 1 g (9 to 200 Hz) 1.5 g (200 to 500 Hz)
Weight	Approx. 250 g
MTBF (Mean Time Between Failures) in years	140,3
Approvals	Radio to R&TTE guidelines EN 300 330, EN 301489, CE, FCC

5.4.7 FCC information

Siemens SIMATIC RF340R

FCC ID: NXW-RF340R

This device complies with Part 15 of the FCC rules. Operation is subject to the following two conditions:

(1) This device may not cause harmful interference.

(2) This device must accept any interference received, including interference that may cause undesired operation.

Caution

Any changes or modifications not expressly approved by the party responsible for compliance could void the user's authority to operate the equipment.

5.4.8 Ordering data for RF340R

Product description	Order No.
Reader RF340R With RS 422 interface (3964R) for ASM 475/452/473 (S7-300, PROFIBUS); IP65; -25 °C … +70 C, dimensions 75 x 91 x 41 (L x W x H in mm); with integrated antenna; max. limit distance 65 mm (depending on transponder)	6GT2801-2AA10

5.4.9 Dimension drawing

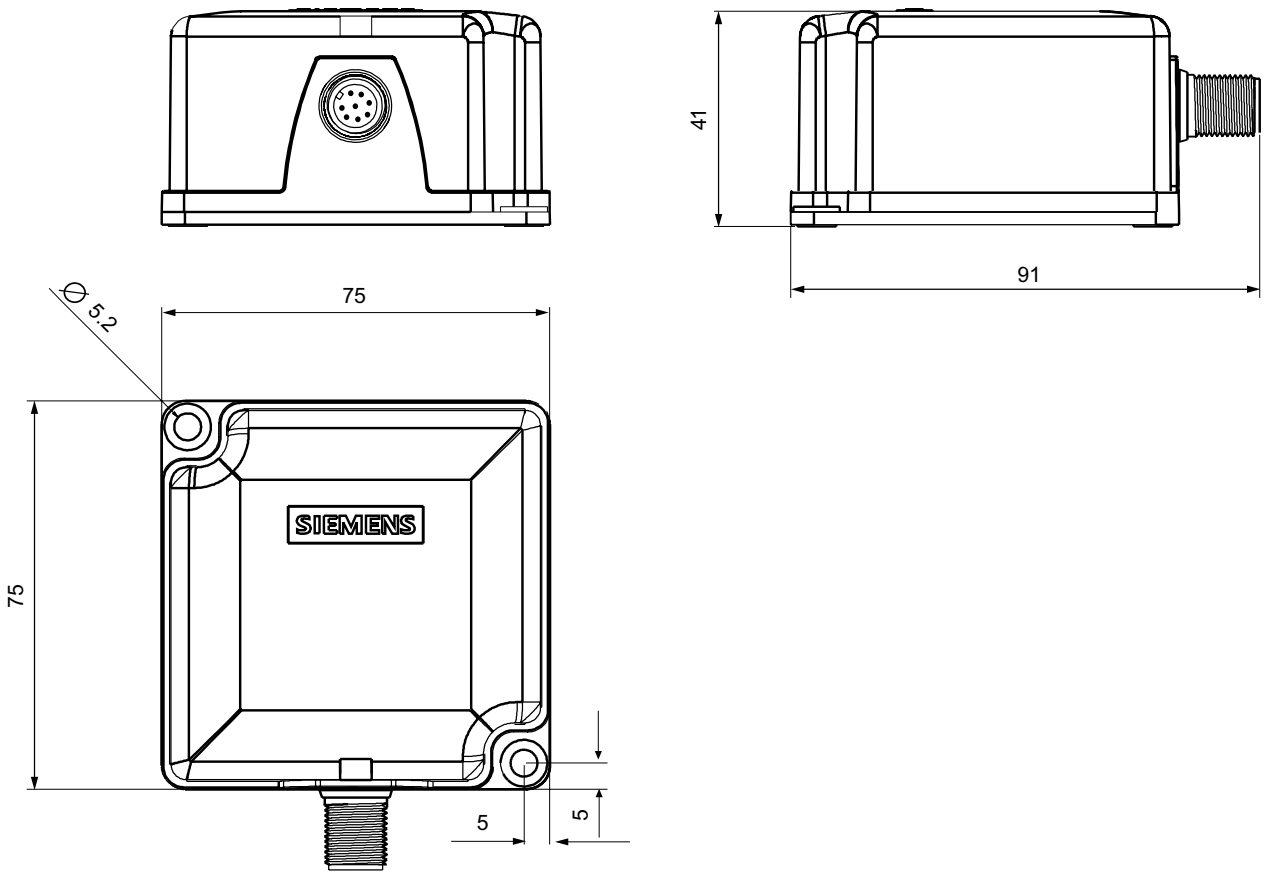

Figure 5-9 Dimension drawing for RF340R

5.5 RF350R

5.5.1 Features

Reader RF350R	Features	
	Design	(1) RS 422 interface (2) Operating indicator (3) Antenna connection
	Application	Identification tasks in assembly lines in harsh industrial environments; for external antennas (ANT 1, ANT 18, ANT 30)
	Interfaces with which the RF350R reader can be operated	ASM 452, ASM 456, ASM 473, ASM 475
	Read/write distance to transponder	max. 60 mm
	Data transmission rate	• Read: approx. 3,100 bytes/s • Write: approx. 3,100 bytes/s

5.5.2 Display elements of the RF350R reader

Table 5-7 Display elements of the reader

Color	Meaning
Green	Operating voltage available
yellow	Transponder present
red	Errors

5.5.3 Ensuring reliable data exchange

The "center point" of the transponder must be situated within the transmission window.

5.5.4 Metal-free area

The RF350R reader does not have an internal antenna. Operation is not affected by mounting on metal or flush-mounting in metal. For information about the metal-free area required by the external antennas, refer to the corresponding section of the chapter *Antennas*.

5.5.5 Technical data of the RF350R reader

Table 5-8 Technical data of the RF350R reader

Inductive interface to the transponder Transmission frequency for power/data	 13.56 MHz
Antenna	External, plug-in MOBY E antennas ANT 1, ANT 18 or ANT 30
Interface to communication module	RS 422 (3964R protocol)
Baud rate	19200 baud, 57600 baud, 115 baud
Cable length between reader and communication module	Max. 120 m Data cable length max. 1000 m (shielded cable)
Read/write distances of reader	See field data
Minimum distance between two antennas	See field data
Maximum data transfer rate reader - transponder (tag) Reading Writing	 Approx. 3100 bytes/s Approx. 3100 bytes/s
Functions	Initialize/read/write transponder Scan status and diagnostics information Switch antenna on/off Repeat command Scan transponder serial numbers
Voltage supply	24 V DC, 110 mA typ.
Display elements	2-color LED (operating voltage, presence, error)
Plug connector	M12 (8-pin); M8 (4-pin) for antenna
Enclosure Dimensions (in mm) Color Material	 75 x 75 x 40 (without M12 device connector) Anthracite Plastic PA 12
Fixing	2 x M5 screws
Ambient temperature during operations during transport and storage	 -25 °C to +70 °C -40 °C to +85 °C
Degree of protection to EN 60529 Shock to EN 60 721-3-7 Class 7 M2 Overall shock response spectrum, Type II Vibration to EN 60 721-3-7 Class 7 M2	IP65 50 g 1 g (9 to 200 Hz) 1.5 g (200 to 500 Hz)
Weight	Approx. 250 g
MTBF (Mean Time Between Failures) in years	140,3
Approvals	Radio to R&TTE guidelines EN 300 330, EN 301489, CE, FCC

5.5.6 FCC information

Siemens SIMATIC RF350R

FCC ID: NXW-RF350R

This device complies with Part 15 of the FCC rules. Operation is subject to the following two conditions:

(1) This device may not cause harmful interference.

(2) This device must accept any interference received, including interference that may cause undesired operation.

Caution

Any changes or modifications not expressly approved by the party responsible for compliance could void the user's authority to operate the equipment.

5.5.7 Ordering data for RF350R

Product description	Order No.
Reader RF350R With RS 422 interface (3964R) for ASM 475/452/473 (S7-300, PROFIBUS); IP65; - 25 °C … +70 C, dimensions 75 x 75 x 40 (L x W x H in mm); for plug-in antennas from the MOBY E product range; max. limit distance 65 mm (depending on transponder)	6GT2801-4AA10

5.5.8 Dimension drawing

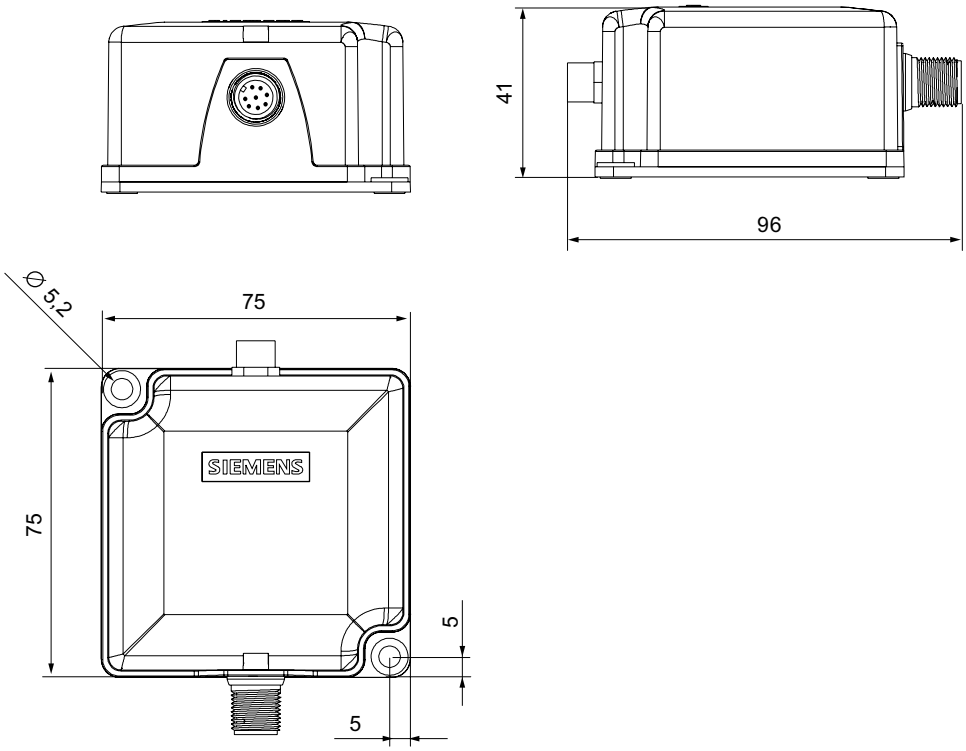

Figure 5-10 RF350R dimension drawing

5.5.9 Antennas

5.5.9.1 Features

You can use the following plug-in antennas from the MOBY E product spectrum for the RF350R reader:

Antenna	Product photo	Limit distance S_g in mm [1]	Dimensions (L x B x H) in mm	Suitable for dynamic operation
MOBY E ANT 1		to 60	75 x 75 x 20	Yes
MOBY E ANT 18		to 13	Ø M18 x 50	no
MOBY E ANT 30		to 22	Ø M30 x 58	no

1) depending on the transponder used

ANT 1

The ANT 1 is an antenna in the mid performance range and can be used to the customer's advantage in production and assembly lines due to its manageable housing shape. The antenna dimensions make it possible to read/write large quantities of data dynamically from/to the tag during operation. The antenna cable can be connected at the reader end.

ANT 18

The ANT 18 is designed for use in small assembly lines. Due to its small, compact construction, the antenna can be easily positioned for any application using two plastic nuts (included in the package). The antenna cable can be connected at the reader end. With the RF320T and RF340T tags, communication with the data storage unit is only possible in static mode.

ANT 30

The ANT 30 is designed for use in small assembly lines. In comparison to ANT 18, the maximum write/read distance is approximately 60 % larger. Due to its compact construction, the antenna can be easily positioned for any application using two plastic nuts (included in the package). The antenna cable can be connected at the reader end. With the RF320T, RF340T and RF350T tags, communication with the data storage unit is only possible in static mode.

5.5.9.2 Ensuring reliable data exchange

The "center point" of the transponder must be situated within the transmission window.

5.5.9.3 Metal-free area

The antennas ANT1, ANT18 and ANT30 can be flush-mounted on metal. Please allow for a possible reduction in the field data values.

Metal-free area for flush-mounting:

a = 40 mm

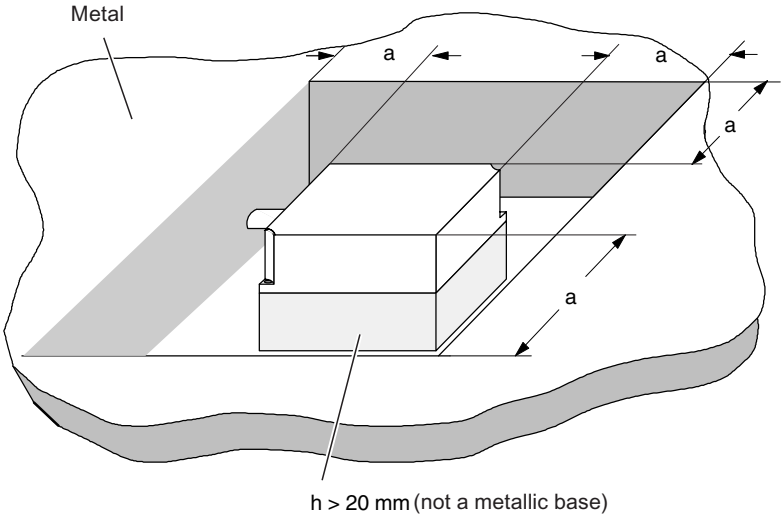

Figure 5-11 Metal-free area for ANT 1

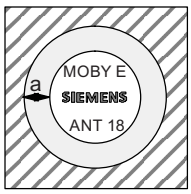

a = 10 mm
b = 10 mm

Metal-free area for flush-mounting:

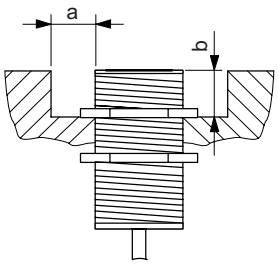

ANT 18

Note:
If the metal-free area is not observed the limit and operating distances are reduced

Figure 5-12 Metal-free area for ANT 18

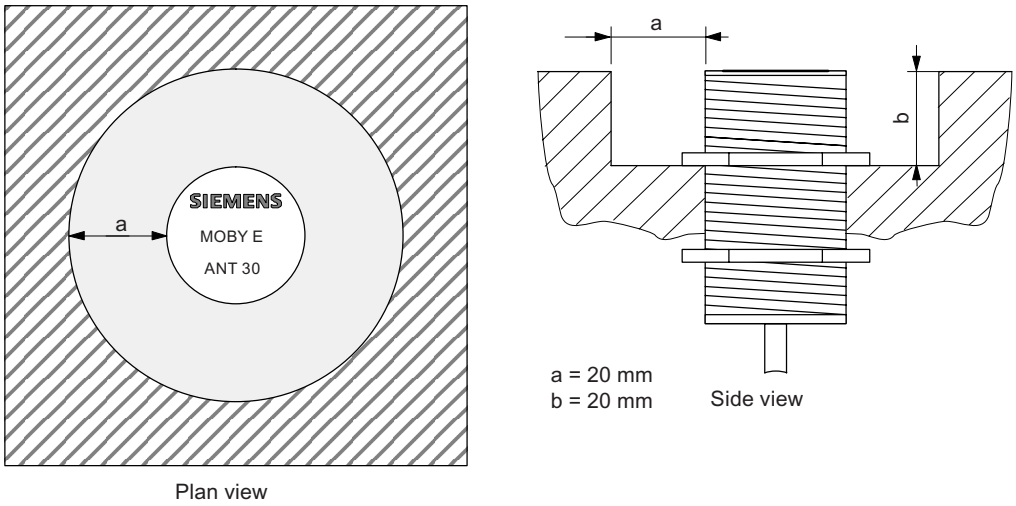

Figure 5-13 Metal-free area for ANT 30

5.5.9.4 Minimum distance between antennas

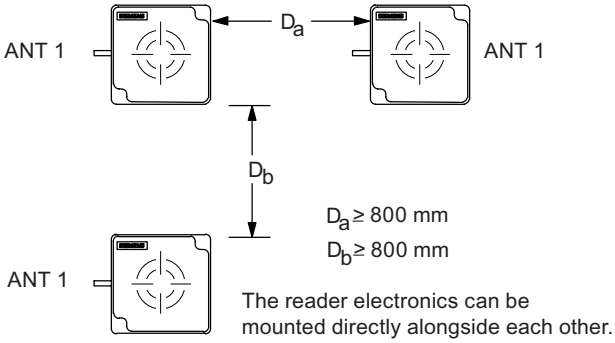

Figure 5-14 Minimum distance for ANT 1

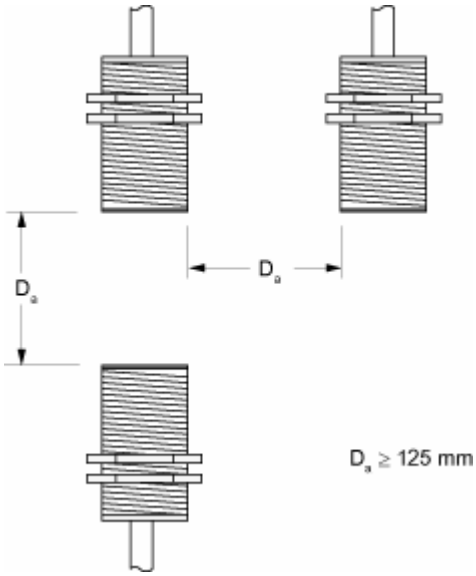

Figure 5-15 Minimum distance for ANT 18

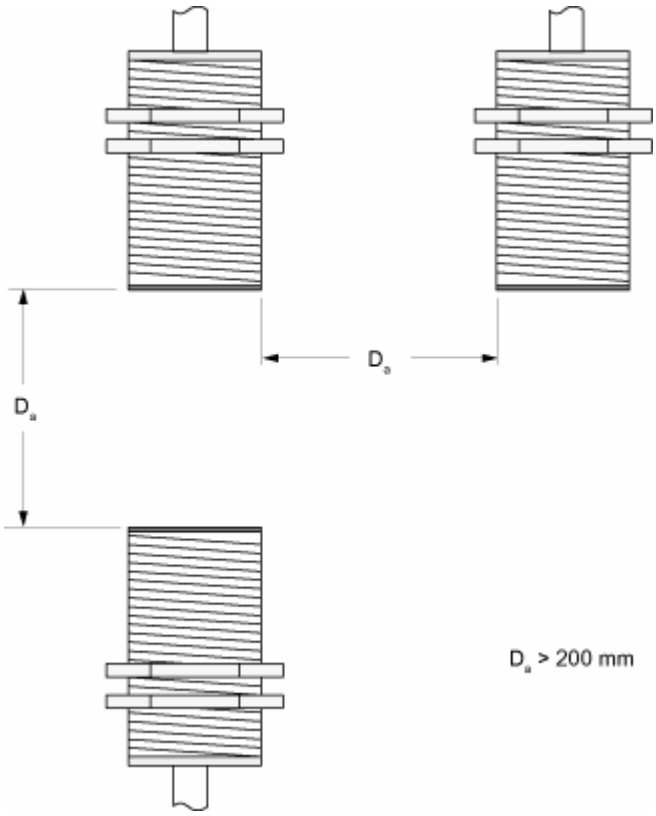

Figure 5-16 Minimum distance for ANT 30

5.5.9.5 Technical data for antennas

Table 5-9 Technical data for antennas ANT1, ANT18 and ANT30

Antenna	ANT1	ANT18	ANT30
Read/write distance antenna to transponder (Sg) max	100 mm	15 mm	24 mm
Enclosure dimensions in mm	75 x 75 x 20 (L x W x H)	M18 x 1.0 x 55 (Ø x thread x L)	M30 x 1.5 x 58 (Ø x thread x L)
Color	Anthracite	Pale turquoise	
Material	Plastic PA 12	Plastic Krastin	
Plug connection	4-pin (pins on antenna side)		
Antenna cable lengths	3 m		
Type of protection to EN 60529	IP 67	IP 67 (at the front)	
Shock-resistant acc. to EN 60721-3-7, Class 7M2 Vibration-resistant to EN 60721-3-7, Class 7M2	50 g [1)] 20 g (3 to 500 Hz) [1)]		
Attachment of the antenna	2 x M5 screws	2 plastic nuts M18 x 1.0	2 plastic nuts M30 x 1.5
Ambient temperature • During operation • Transport and storage	• -25 °C to +70 °C • -40 °C to +85 °C		
MTBF (at +40 °C)	2,5 x 10^5 hours		
Approx. weight	80 g	120 g	150 g
1) Warning: The values for shock and vibration are maximum values and must not be applied continuously.			

5.5.9.6 Ordering data for antennas

Product description	Order No.
MOBY E, ANT 1	6GT2398-1CB00
MOBY E, ANT 18	6GT2398-1CA00
MOBY E, ANT 30	6GT2398-1CD00

5.5.9.7 Dimension drawings for antennas

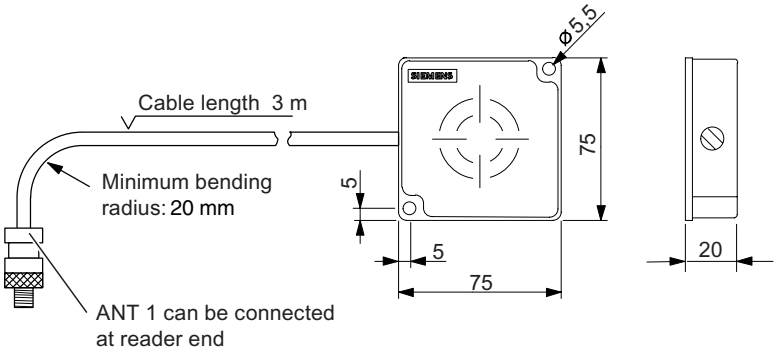

Figure 5-17 Dimension drawing for ANT 1

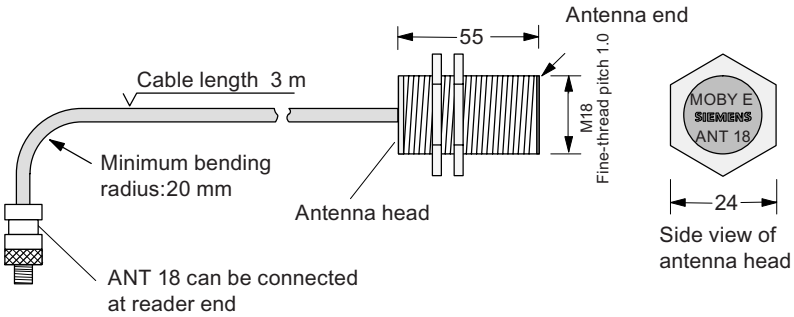

Figure 5-18 Dimension drawing for ANT 18

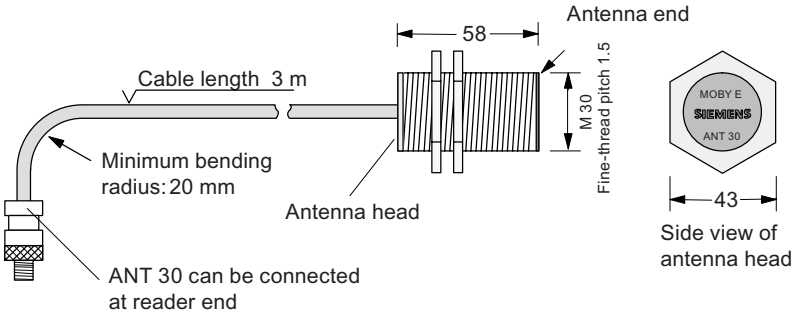

Figure 5-19 Dimension drawing for ANT 30

Transponders

6

6.1 Overview

Transponders consist predominantly of logic, FRAM and/or EEPROM.

If a transponder moves into the transmission window of the reader, the necessary power for all of the circuit components is generated and monitored by the power supply unit. The pulse-coded information is prepared in such a way that it can be processed further as pure digital signals. The handling of data, including check routines, is performed by the logic, which also manages the various memories.

6.2 RF320T

6.2.1 Features

Transponder RF320T	Features	
	Application	Identification tasks on small assembly lines in harsh industrial environments
	Memory	Read-only area (4 bytes UID) User data area (20 bytes)
	Read/write range	See section *Field data*
	Mounting on metal	Not possible Recommended distance from metal ≥ 20 mm

6.2.2 Metal-free area

Mounting of RF320T on metal

Direct mounting of the RF320T on metal is not allowed.

The following figures show the minimum distance between the RF320T and metal:

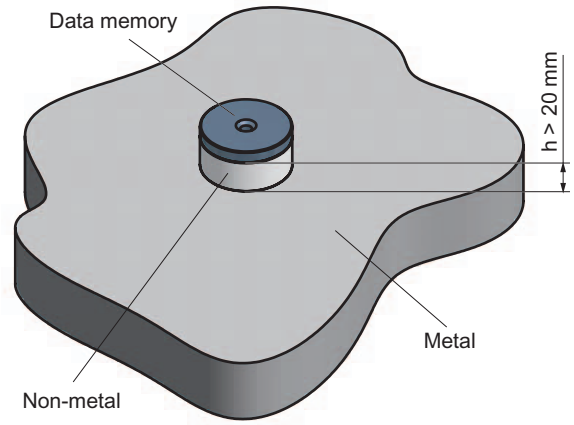

Figure 6-1 Mounting of an RF320T on metal with spacer

Flush-mounting of RF320T in metal

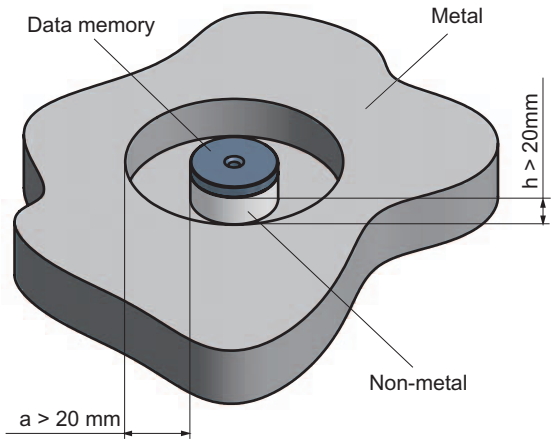

Figure 6-2 Flush-mounting of RF320T in metal with spacer

At lower values, the field data change significantly, resulting in a reduced range.

6.2.3 Technical data

Table 6-1 Technical data for RF320T

Memory size	20 bytes EEPROM (r/w), 4 bytes UID (ro)
Memory organization	Byte-oriented access, write protection possible in 4-byte blocks
MTBF (Mean Time Between Failures) in years	1871
Read cycles	Unlimited
Write cycles, min.	50 000
at ≤ 40 °C, typical	> 100 000
Data retention time	> 10 years (at < +40 °C)
Read/write distance	max. 18 mm (see field data)
Energy source	Inductive power transmission
Shock/vibration-resistant to EN 60721-3-7, Class 7 M3	100 g/20 g
Torsion and bending load	not permissible
Fixing	Adhesive/M3 screws
Recommended spacing from metal	> 20 mm
Degree of protection per EN 60529	• IP67/IPX9K
Housing • Dimensions • Color/material	Button • Ø 27 mm x 4 mm • Black/epoxy resin
Ambient temperature • During operation • Storage and transport	 • -25 to +85 °C • -40 to +125 °C
Weight	Approx. 5 g

Note

All the technical data listed are typical data and are applicable for an ambient temperature of between 0 C and +50°C and a metal-free environment.

6.2.4 Ordering data

Transponder RF320T	Order number:
Transponder RF320T, button, 20 byte EEPROM, IP 67, -25 °C to +85 °C, d = 27 mm x 4 mm	6GT2800-1CA00

6.2.5 Dimension drawing

Dimensions of the device

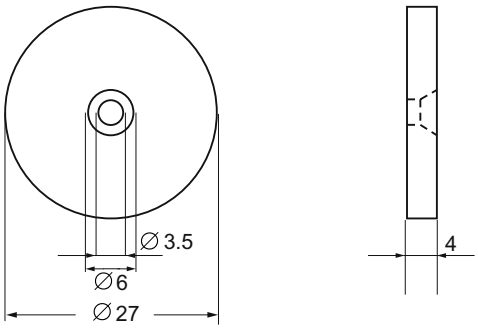

Dimensions in millimeters

6.3 RF340T

6.3.1 Features

Transponder RF340T	Features	
	Application	Identification tasks on small assembly lines in harsh industrial environments
	Memory	Read-only area (4 bytes UID) Read/write memory (8 KB) OTP [1] memory (20 bytes)
	Read/write range	See section *Field data*
	Mounting on metal	Direct mounting on metal is possible.
1) OTP: (One Time Programmable)		

6.3.2 Metal-free area

Direct mounting of the RF340T on metal is permitted.

Mounting of RF340T on metal

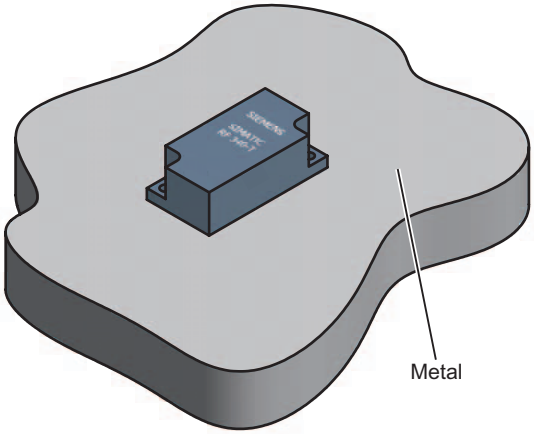

Figure 6-3 Mounting of RF340T on metal

Flush-mounting of RF340T in metal:

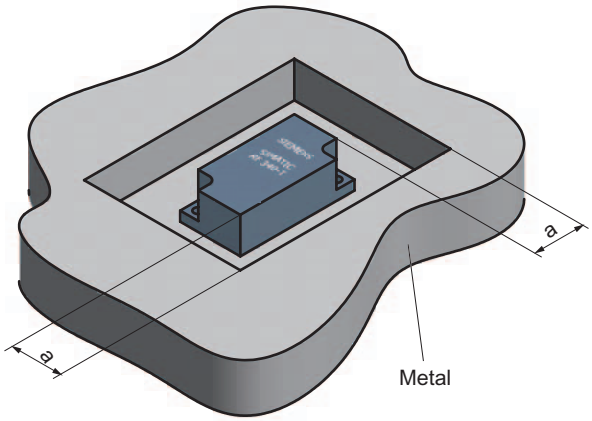

Figure 6-4 Flush-mounting of RF340T in metal

The standard value for a is ≥ 20 mm. At lower values, the field data change significantly, resulting in a reduction in the range.

6.3.3 Technical data

Table 6-2 Technical data for RF340T

Memory size	8 KB	
Memory organization	Blocks of 8 bits / 1 byte	
Memory configuration • Serial number (UID) • Application memory • OPT memory	 • 4-byte (fixed code) • 8189 bytes r/w • 20-byte OTP 1) memory	
Storage technology	FRAM / EEPROM	
MTBF (Mean Time Between Failures) in years	1201	
Write cycles, at +40°C	Virtually unlimited (>10^{10})	
Read cycles	Unlimited	
Transmission rate • Read • Write	with RS 422 reader: Approx. 0.3 ms / byte approx. 0.3 ms / byte	with IQ-Sense reader: Approx. 20 ms / byte approx. 25 ms / byte
Data retention	> 10 years	
Read/write distance	0 to max. 60 mm (depends on reader used)	
Multitag capability	max. 4 transponders	
Recommended spacing from metal	can be directly mounted on metal	
Power supply	Inductive, without battery	
Degree of protection to EN 60529 Shock to EN 60721-3-7 Vibration to EN 60721-3-7 Torsion and bending load	IP68/IPX9K 50 g 20 g Not permitted permanently	
Housing dimensions Color Material Fixing	48 x 25 x 15 mm (L x W x H) Anthracite PA12 2 screws (M3)	
Ambient temperature • During operation • Storage and transport	 -25°C to +85°C -40°C to +85°C	
Weight	Approx. 25 g	
1) OTP: (One Time Programmable)		

6.3.4 Ordering data

Transponder RF340T	Order number:
Transponder RF340T, 8 KB FRAM, IP 68, -25 °C to +85 °C, 48 x 25 x 15 mm (L x W x H)	6GT2800-4BB00

6.3.5 Dimension drawing

Dimensions of the device

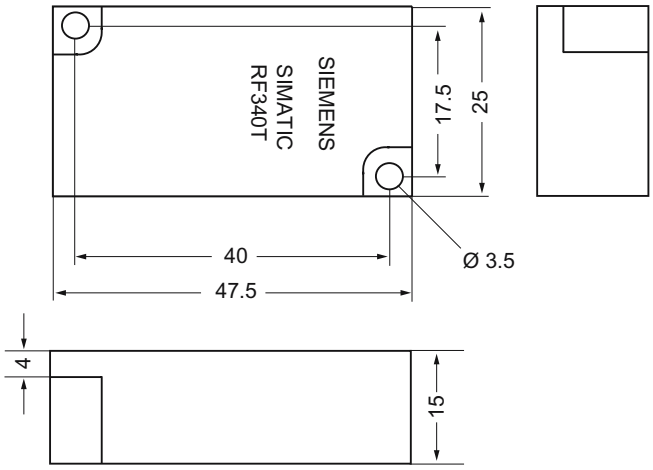

Dimensions in millimeters

6.4 RF350T

6.4.1 Features

Transponder RF350T	Features	
	Application	Identification tasks on small assembly lines in harsh industrial environments
	Memory	Read-only area (4 bytes UID) Read/write memory (32 KB) OTP [1] memory (20 bytes)
	Read/write range	See section *Field data*
	Mounting on metal	Direct mounting on metal is possible.
1) OTP: (One Time Programmable)		

6.4.2 Metal-free area

Direct mounting of the RF350T on metal is permitted.

Mounting of RF350T on metal

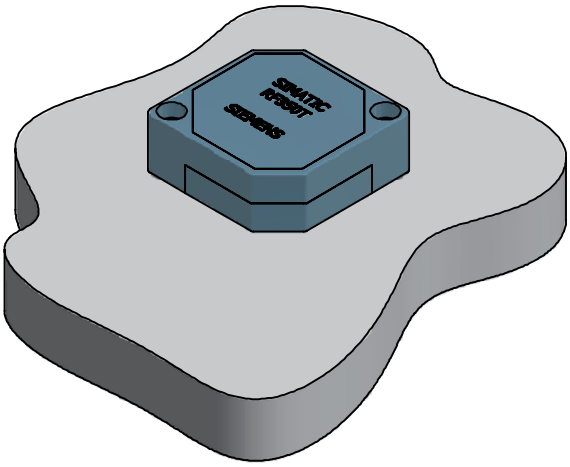

Figure 6-5 Mounting of RF350T on metal

Flush-mounting of RF350T in metal:

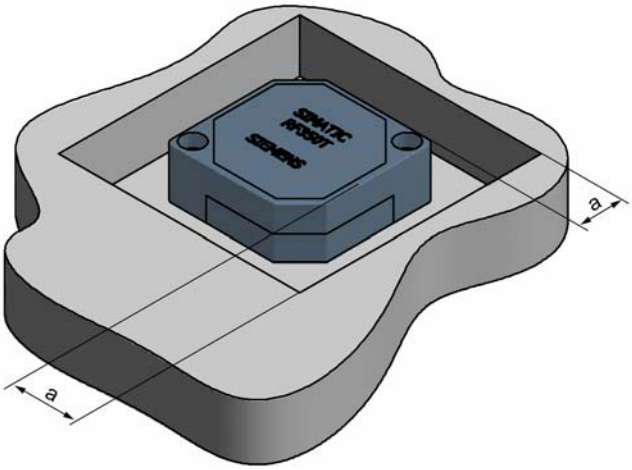

Figure 6-6 RF350T flush-mounted in metal

The standard value for a is ≥ 20 mm. At lower values, the field data change significantly, resulting in a reduction in the range.

6.4.3 Technical data

Table 6-3 Technical data for RF350T

Memory size	32 KB	
Memory organization	Blocks of 8 bits / 1 byte	
Memory configuration • Serial number (UID) • Application memory • OTP [1] memory	 • 4-byte (fixed code) • 32765 bytes r/w • 20 bytes	
Storage technology	FRAM / EEPROM	
MTBF (Mean Time Between Failures) in years	1201	
Write cycles, at +40°C	Virtually unlimited (>10^{10})	
Read cycles	Practically unlimited (>10^{10})	
Transmission rate • read • Write	with RS 422 reader: Approx. 0.3 ms / byte approx. 0.3 ms / byte	with IQ-Sense reader: Approx. 20 ms / byte approx. 25 ms / byte
Data retention	> 10 years	
Read/write distance	0 to max. 60 mm (depends on reader used)	
Multitag capability	max. 4 transponders	
Recommended spacing from metal	can be directly mounted on metal	
Power supply	Inductive, without battery	
Degree of protection to EN 60529 Shock to EN 60721-3-7 Vibration to EN 60721-3-7 Torsion and bending load	IP68 50 g 20 g Not permitted permanently	
Housing dimensions Color Material Fixing	50 x 50 x 20 mm (L x W x H) Anthracite PA12 2 screws M4	
Ambient temperature • During operation • Storage and transport	 -25°C to +85°C -40°C to +85°C	
Weight	Approx. 25 g	
1) OTP: (One Time Programmable)		

6.4.4 Ordering data

RF350T	Order number:
32 KB FRAM (read/write) + 4 byte EEPROM (read only), IP 68, -25 °C to +85 °C, dimensions 50 x 50 x 20 (LxWxH in mm)	6GT2800-5BD00

6.4.5 Dimension drawing

Dimension drawing of RF350T transponder

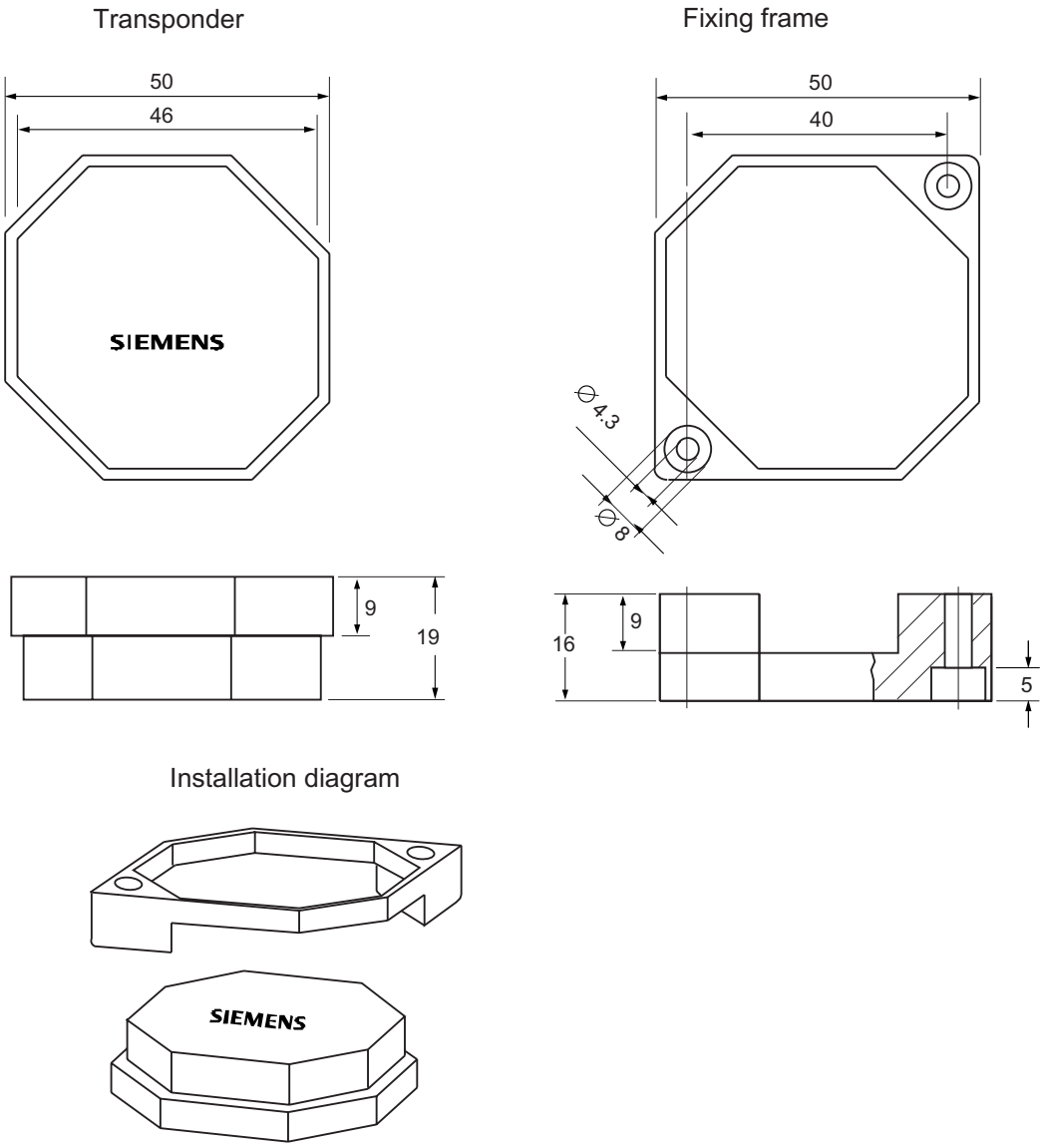

The transponder can be mounted as shown with the fixing frame.

Figure 6-7 RF350T dimension drawing

6.5 RF360T

6.5.1 Features

Transponder RF360T	Features	
	Application	Identification tasks on small assembly lines in harsh industrial environments
	Memory	Read-only area (4 bytes UID) Read/write memory (8 KB) OTP [1] memory (20 bytes)
	Read/write range	See section *Field data*
	Mounting on metal	Not possible; recommended distance from metal ≥ 20 mm
1) OTP. (One Time Programmable)		

6.5.2 Metal-free area

Direct mounting of the RF360T on metal is not allowed. A distance ≥ 20 mm is recommended. This can be achieved using the spacer 6GT2190-0AA00 in combination with the fixing pocket 6GT2190-0AB00.

Mounting of RF360T on metal

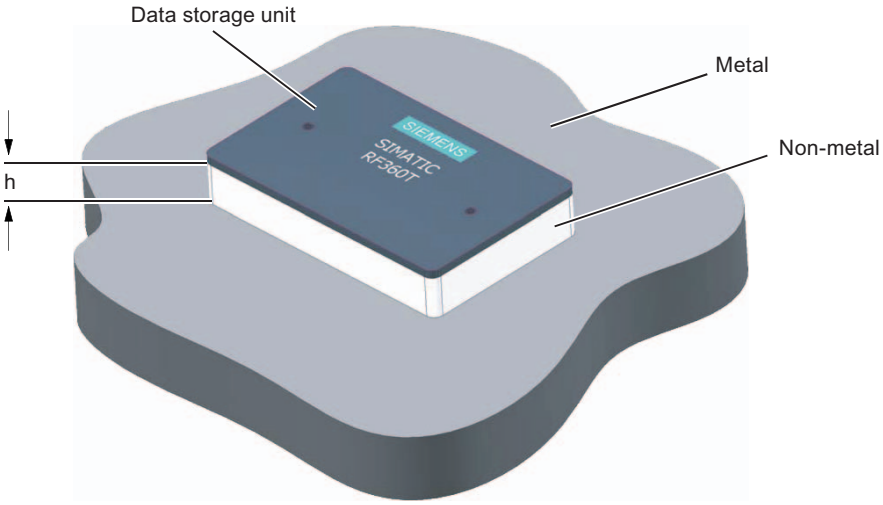

Figure 6-8 Mounting of RF360T with spacer

The standard value for h is ≥ 20 mm.

Flush-mounting of RF360T in metal:

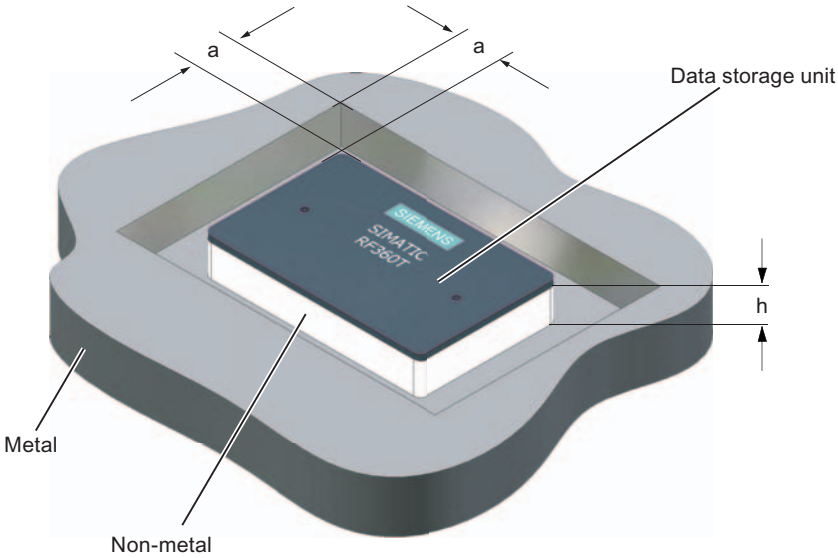

Figure 6-9 Flush-mounting of RF360T with spacer

The standard value for a is ≥ 20 mm. At lower values, the field data change significantly, resulting in a reduction in the range.

Dimensions of spacer and fixing pocket for RF360T

Dimension sketch

Spacer: 6GT2190-0AA00

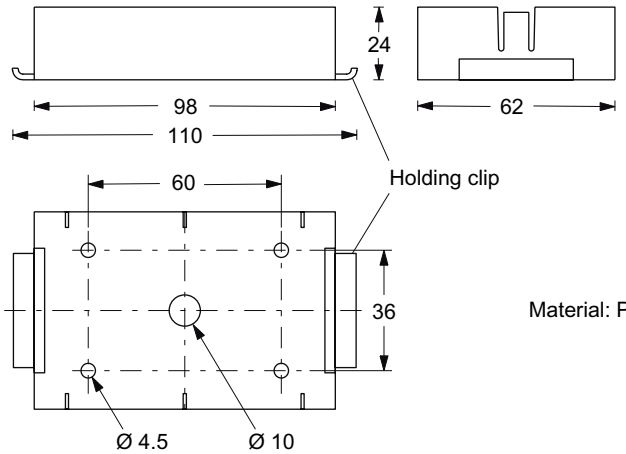

Fixing pocket: 6GT2190-0AB00

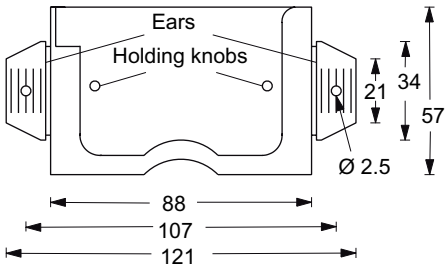

Material: PA 6

The spacer can be directly mounted on metal. In combination with the fixing pocket, a non-metal distance of 20 mm results between the transponder and metal.

Mounting:
- With 2 or 4 screws (M4)
- With rubbers on the holding clips (e.g. on mesh boxes)
- With cable ties on the holding clips (e.g. on mesh boxes)

Transponder with fixing pocket

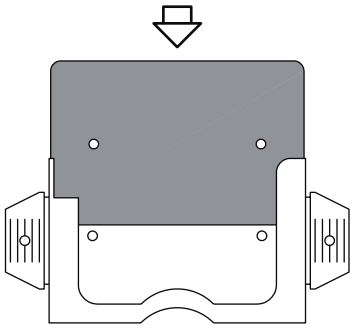

The transponder is inserted into the fixing pocket. Locking is via the holding knobs in the fixing pocket.

The fixing pocket is attached to a non-metal base by the ears. This can be achieved with:
- Screws in the holes provided
- Rivets in the holes provided
- Nails through the holes
- Tacks through the plastic of the ears
- Pushing into the spacers

The ears can be moved through up to 90°.

Transponder with fixing pocket and spacer (connected together)

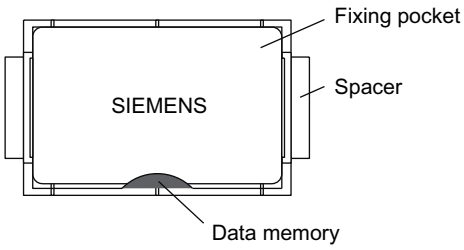

Re-assembly instructions:

The transponder is inserted into the fixing pocket. The ears are moved by 90° and inserted into the spacer. The fixing pocket must be aligned such that it covers the transponder (see Figure). Locking is automatic.

Figure 6-10 Dimensions of spacer and fixing pocket for RF360T

6.5.3 Technical data

Table 6-4 Technical data for RF360T

Memory size	8 KB	
Memory organization	Blocks of 8 bits / 1 byte	
Memory configuration • Serial number (UID) • Application memory • OTP [1] memory	 • 4-byte (fixed code) • 8189 bytes r/w • 20 bytes	
Storage technology	FRAM / EEPROM	
MTBF (Mean Time Between Failures) in years	1201	
Write cycles, at +40°C	Virtually unlimited (>10^{10})	
Read cycles	Practically unlimited (>10^{10})	
Transmission rate • Read • Write	with RS 422 reader: Approx. 0.3 ms / byte approx. 0.3 ms / byte	with IQ-Sense reader: Approx. 20 ms / byte approx. 25 ms / byte
Data retention	> 10 years	
Read/write distance	0 to max. 60 mm (depends on reader used)	
Multitag capability	max. 4 transponders	
Recommended spacing from metal	≥ 20 mm; e.g. using spacer 6GT2190-0AA00 in conjunction with fixing pocket 6GT2190-0AB00	
Power supply	Inductive, without battery	
Degree of protection to EN 60529 Shock to EN 60721-3-7 Vibration to EN 60721-3-7 Torsion and bending load	IP67 50 g 20 g Not permitted permanently	
Housing dimensions Color Material Fixing	85.8 x 54.8 x 2.5 mm (L x W x H) Anthracite PA12 2 screws (M3) or with fixing pocket 6GT2190-0AB00	
Ambient temperature • During operation • Storage and transport	 -25°C to +75°C -40°C to +85°C	
Weight	Approx. 25 g	
1) OTP: (One Time Programmable)		

6.5.4 Ordering data

RF360T	Order number
8 KB FRAM (read/write) + 4 byte EEPROM (read only), IP 67, -25 °C to +75 °C, dimensions 85.8 x 54.8 x 2.5 (LxWxH in mm)	6GT2800-4AC00

6.5.5 Dimension drawing

Dimension drawing of RF360T transponder

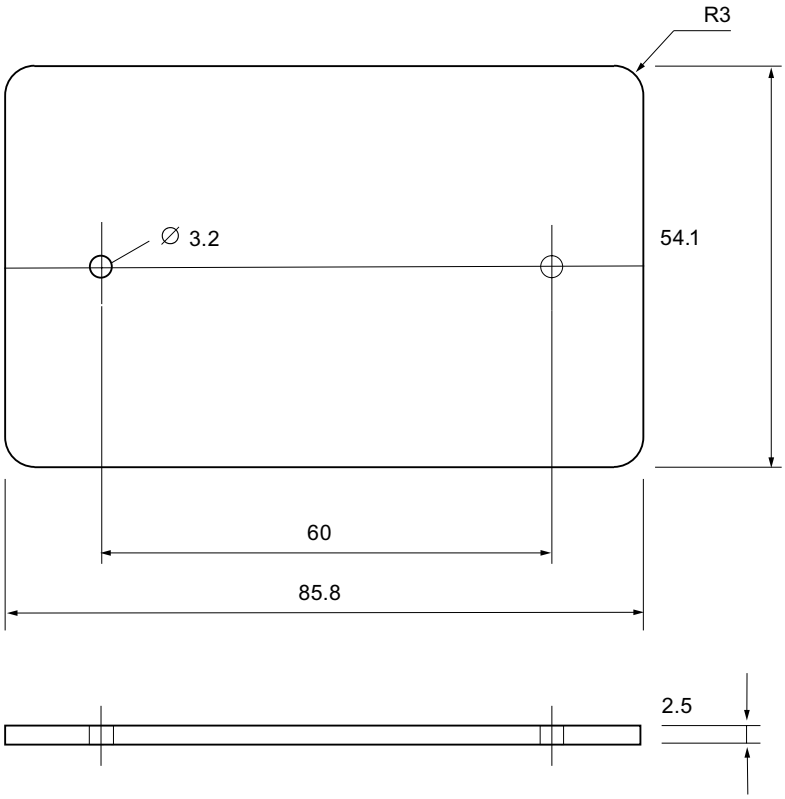

Figure 6-11 Dimensions of RF360T

6.6 Memory configuration of the RF300 tags

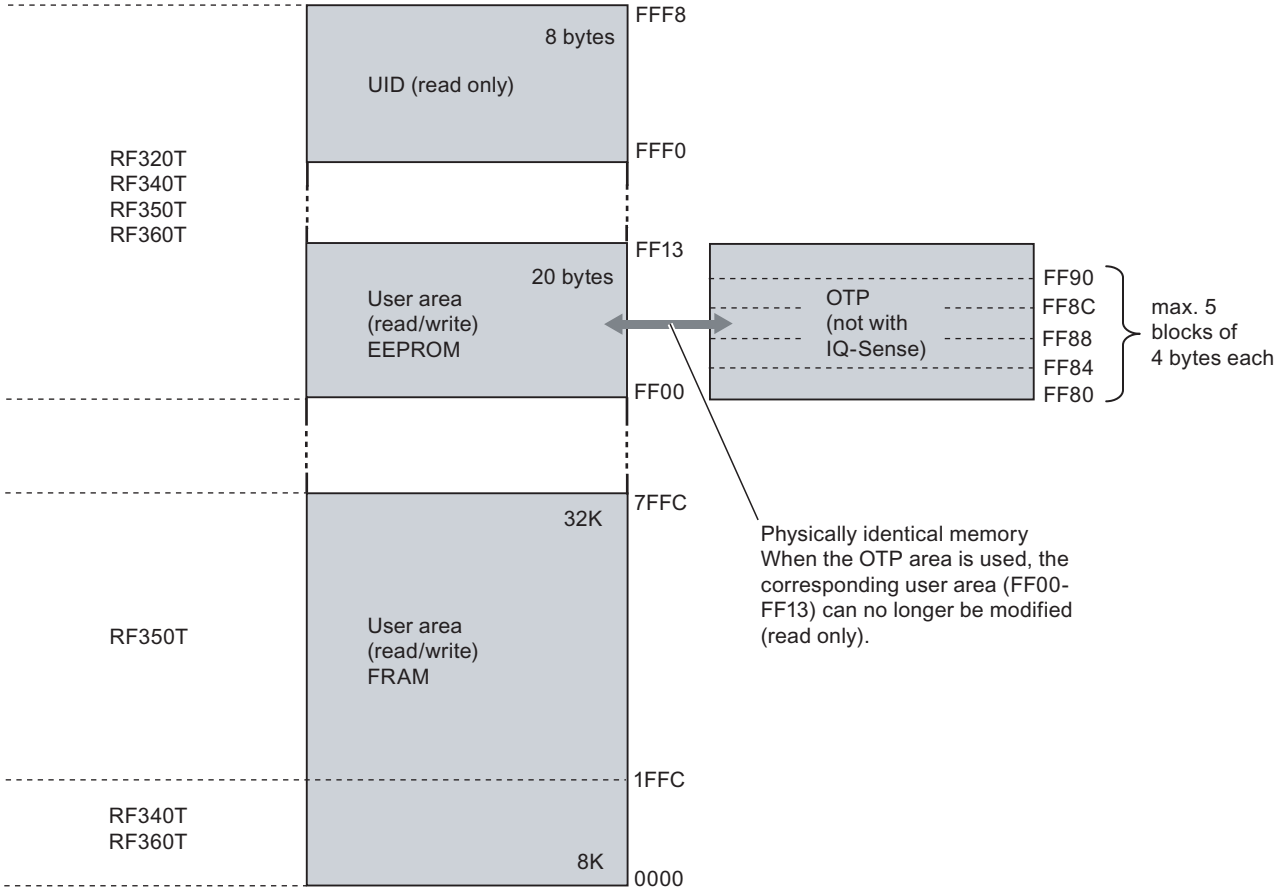

Figure 6-12 Memory configuration of the RF300 tags

The memory configuration of an RF300 tag always comprises an EEPROM memory that has 20 bytes for user data (read/write) and a 4 byte unique serial number (UID, read only). For reasons of standardization, the UID is transferred as an 8 byte value through a read command to address FFF0 with a length of 8. The unused 4 high bytes are filled with zeros.

A high-speed FRAM memory (read/write) is available as an option. Depending on the tag type, this is 8 KB (0-1FFC) or 32 KB (0-7FFC) in size.

The EEPROM memory area (address FF00-FF13) can also be used as a so-called "OTP" memory (One Time Programmable). The 5 block addresses FF80, FF84, FF88, FF8C and FF90 are used for this purpose. A write command to this block address with a valid length (4, 8, 12, 16, 20 depending on the block address) protects the written data from subsequent overwriting.

Notice

This operation is not reversible.

Note

The OTP area cannot be used for the IQ-Sense reader variant.

When the OTP area is used, it must also be ensured that the blocks are write-protected starting from Block 0consecutively.

Examples:

3 blocks (with write command), Block 0, 1, 2 (FF80, length = 12): valid

2 blocks (consecutive), Block 0 (FF80, length =4), Block 1 (FF84, length = 4): valid

2 blocks (consecutive), Block 0 (FF80, length =4), Block 2 (FF88, length = 4): Invalid

1 Block, Block 4 (FF90, length = 4): Invalid

The EEPROM user memory (address FF00-FF13, or FF80-FF90) requires significantly more time for writing (approx. 11 ms/byte) than the high-speed FRAM memory. For time-critical applications with a write function, it is therefore recommended that FRAM tags are used (e.g. RF340T, RF350T, RF360T).

Communication modules

7

7.1 8xIQ-Sense

7.1.1 Features

Field of application

The 8xIQ-Sense module is the link between the RF310R with 8xIQ-Sense interface and SIEMENS S7-300 and functions in the same manner as the communication module (interface module). It can be operated centrally in an S7-300 or decentrally in an ET200M.

Figure 7-1 8xIQ-Sense interface module

7.1.2 Indicators

Status displays

The 8xIQ-Sense module has the following LEDs:
A green LED, which has no function for RFID devices, and a red SF LED (system fault LED), which indicates the diagnostic state of the module.

	LEDs	Labeling	LED status	Meaning
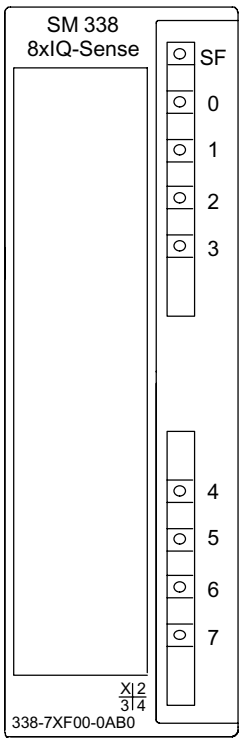	Green LED per channel	0…7	Has no function here	
	Red	SF	Illuminated	Module fault, sensor fault, active teach-in operation, external auxiliary voltage missing
			Not illuminated	No fault or no active teach-in operation

7.1.3 Configuration

Centralized configuration with SIMATIC S7-300

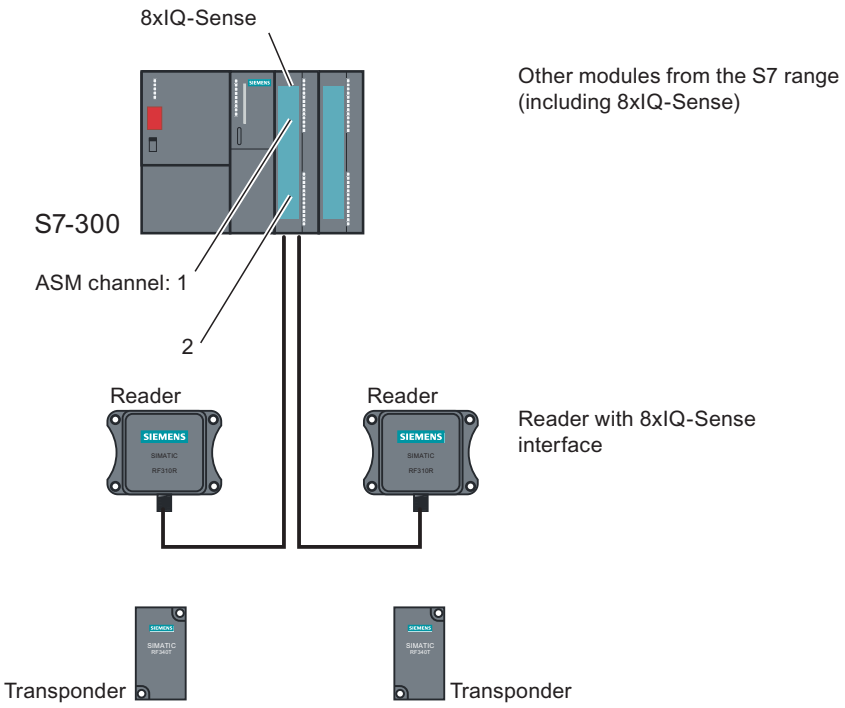

Figure 7-2 RF310R reader with 8xIQ-Sense interface

Distributed configuration with ET 200M

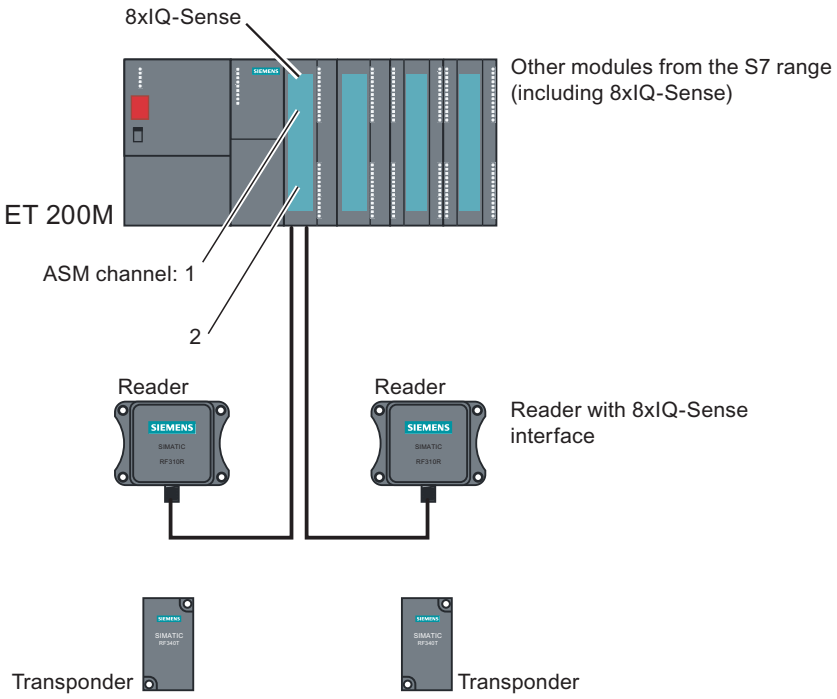

Figure 7-3 RF310R reader with 8xIQ-Sense interface

Pin assignment of RF310R with IQ-Sense interface

Table 7-1 Pin assignment of RF310R with IQ-Sense interface

Pin	Pin, device end, 4-pin M12	Assignment
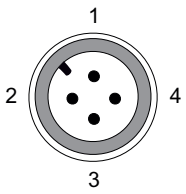	1	IQ-Sense
	2	Not assigned
	3	IQ-Sense
	4	Not assigned

Configuration of connecting cable from 8xIQ-Sense to RF310R

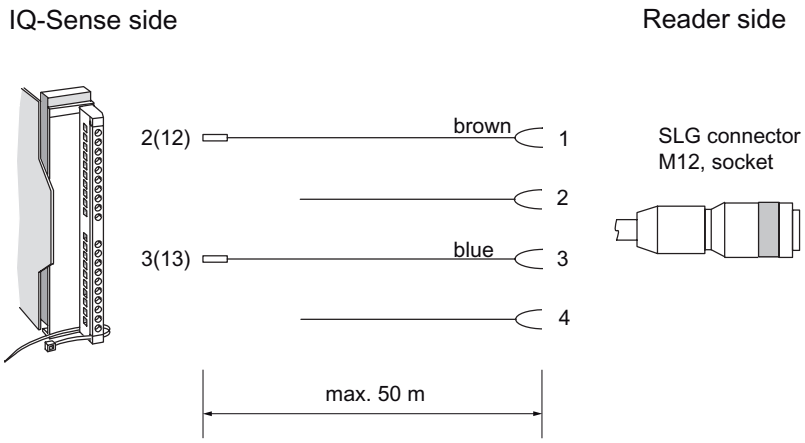

Figure 7-4 Cable and pin assignment of RF300 with IQ-Sense

7.1.4 Addressing

The address range of the 8xIQ-Sense module is 16 bytes I/O.

This is independent of the choice of channel profiles on the connected device

(i.e. the IQ profile IDs in HW Config).

Access to memory areas

A direct association exists between the number of the channel to which the IQ-Sense device is connected (terminal) and the input and output data area of the module. Based on the address range, the following addresses can be used to access the memory areas:

Address = module initial address + (channel no. x 2)

Example

Module initial address = 280

I/O address for channel 3: 286

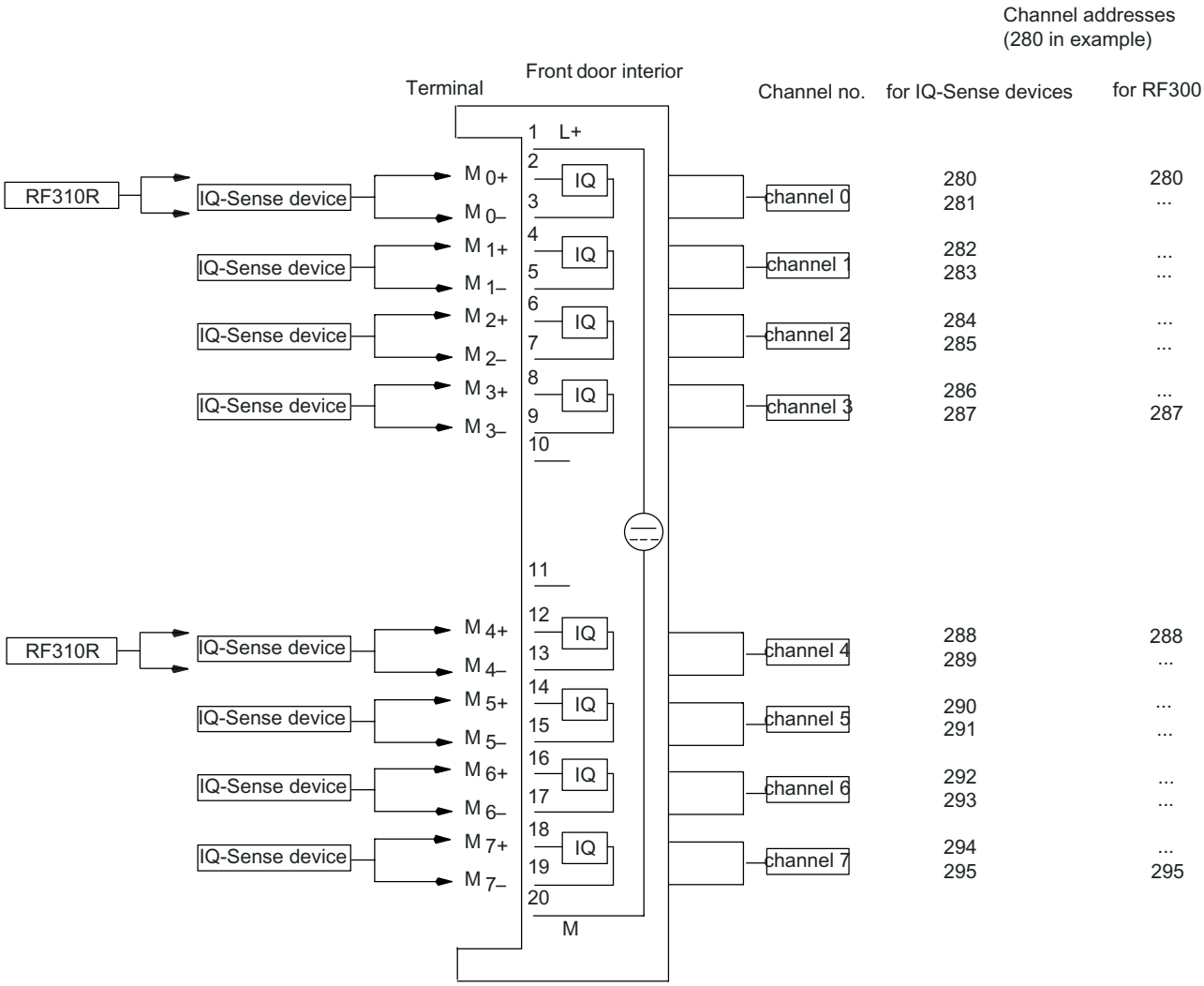

Figure 7-5 8xIQ-Sense module: Assignment of terminal pair to memory area

---

Note

A maximum of two read/write devices can be operated!

Each read/write device uses channel numbers 0 to 3 or 4 to 7.