7.1.5 Technical data

Voltages and currents	
Rated supply voltage	24 V DC
Reverse polarity protection	yes
Galvanic isolation	
• Between the channels	no
• Between channels and backplane bus	yes
Permissible potential difference	
Between different circuits	75 V DC / 60 V AC
Insulation tested at	500 V DC
Current input	
• from the backplane bus	120 mA typical
• from L+ power supply	500 mA max.
Module power loss	2.5 W typical
Module-specific data	
Number of channels	8
Channels for RFID systems	2
Cable length, unshielded	50 m max.
Dimensions and weight	
Dimensions w x h x d (mm)	40 x 125 x 120
Weight	Approx. 235 g

7.1.6 Ordering data

8xIQ-Sense	Order No.
SIMATIC S7-300 IQ-Sense SM338 for S7-300 and ET200M for the connection of up to 8xIQ-Sense sensors Optical sensors, ultrasonic sensors and RF identification systems can be connected.	6ES7 3387XF000AB0
Accessories	
M12 cable plug, 4-pole, with 5 m black PUR cable, 4 x 0.34 mm^2	3RX8000-0CB42-1AF0
M12 cable plug, 4-pole, with 10 m black PUR cable, 4 x 0.34 mm^2	3RX8000-0CB42-1AL0

7.2 ASM 452

7.2.1 Features

Field of application

The ASM 452 interface module is a MOBY module for operating MOBY and RF300 components with RS 422 over PROFIBUS DP-V1 on

- Any computers and PCs
- Any PLCs

When operating the interface module on a SIMATIC S7, function blocks are made available to the user.

Figure 7-6 Interface module ASM 452

The ASM 452 is the result of consistent development of the familiar ASM 450/451 interface modules. Optimal data throughput can be achieved even in large-scale PROFIBUS configurations thanks to the use of acyclic data traffic on PROFIBUS DP V1. The minimum cyclic data load of the ASM 452 on the PROFIBUS provides the user with the guarantee that other PROFIBUS nodes (e.g. DI/DO) can still be processed at great speed.

The ASM 452 is an interface module for communication between PROFIBUS and the RF310R with RS 422 interface. Through the ASM 452, the data on the RF320T, RF340T, RF350T and RF360T transponders can be physically addressed ("Normal" addressing). In SIMATIC S7, FC 45 is available for this purpose.

7.2.2 Pin assignment and display elements

Pin assignments

The figure below illustrates the pin assignments of ASM 452.

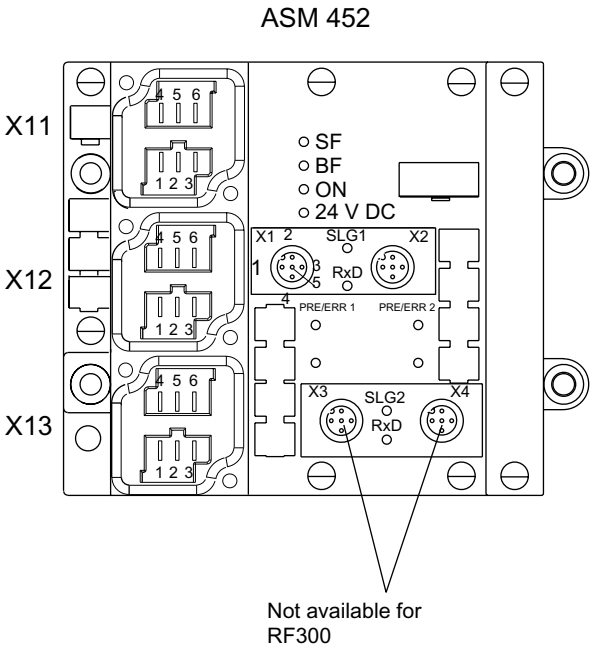

LEDs for PROFIBUS DP

SF: System Fault
BF: Bus Fault
ON: Lit when logic voltage is applied on ASM (generated from 24 V supply voltage).
24 V DC: Lit when 24 V supply voltage is applied to ASM.

LEDs for RF300 and ASM 452

RxD: Reader active with command
PRE/ERR 1 (PRE/ERR 2) Transponder present or error display for reader
(The "transponder present" display always takes priority. The error is only indicated when a transponder is not present.)
Transponder present:
The LED is permanently ON. If more than one transponder is in the field, the number of the transponder is indicated with short flashes. No error display.
Error display:
The LED is permanently OFF. The last error number is indicated with short flashes.
Reader 1: (Reader 2) Reader 1 is selected (Reader 2 is selected.)
Only reader 1 can be selected.

Socket	Pin assignment	
X11 and X12 (PROFIBUS DP)	1	Signal B (red)
	2	PE
	3*	PE
	4	Signal A (green)
	5*	L+
	6*	M
X13 (Supply voltage)	1	PE
	2	L+
	3*	M
	4	PE
	5*	L+
	6*	M

* Not connected

Socket	Pin assignment (reader)		
X1 (X3)	1	+RxD	
	2	+TxD	
	3	-TxD	
	4	-RxD	
	5	PE	
X2 (X4)		X2	X4
	1	+24 V	+24 V
	2	DO1	DI 1
	3	0 V	0 V
	4	DO0	DI 0
	5	PE	PE

Figure 7-7 Pin assignment and LEDs of ASM 452

7.2.3 Configuration

Configuration

Hardware description

The ASM 452 has the same housing as the distributed I/O system ET 200X. General information on ASM 452 (e.g. assembly, operation and wiring; general technical data) is available in the ET200X manual (Order No. 6ES7 198-8FA00-8AA0). Descriptions of accessories and network components can also be found in this manual.

Configuration

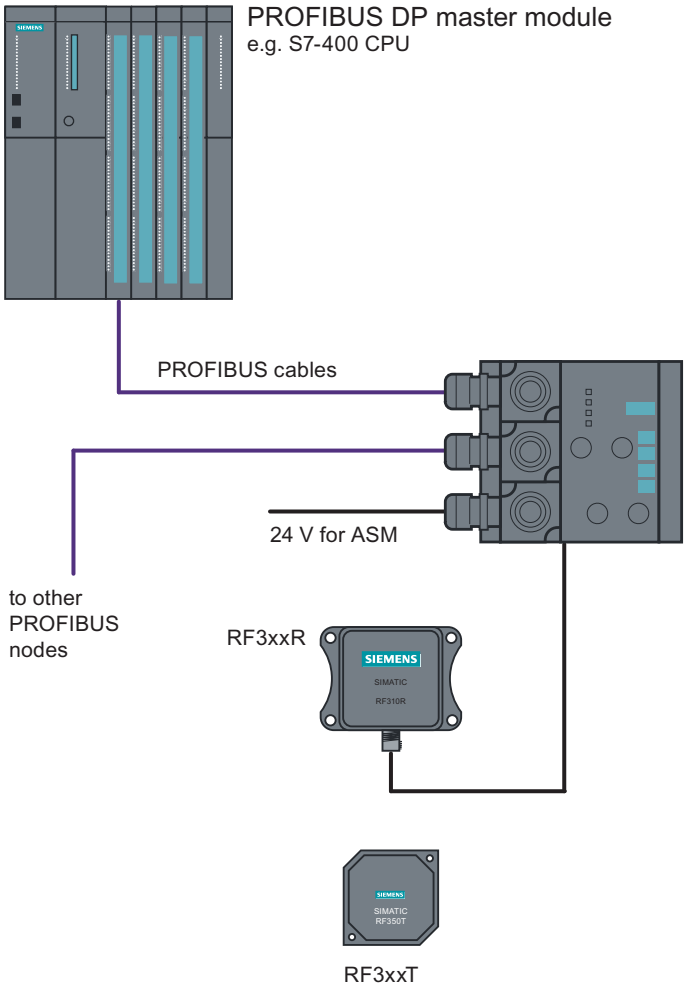

Figure 7-8 ASM 452 configurator

PROFIBUS configuration

The ASM 452 is integrated into the hardware configuration by means of a GSD file. The ASM can then be configured using the HW Config of SIMATIC Manager or another PROFIBUS tool.
A GSD file is provided for ASM 452 on the CD "RFID Systems Software & Documentation".

Operating mode of the ASM 452

The approved operating modes of ASM 452 are described in the GSD file. It is set using the hardware configuration tool (e.g. STEP 7 HW Config).

Reader connection system

A reader always occupies two M12 connector sockets on the ASM 452.
A pre-assembled cable therefore ensures easy connection of the reader (see figure below).
The connecting cable is available in lengths of 2 m (standard) and 5 m. Extensions are possible up to 1000 m using connecting cables 6GT2891-… .

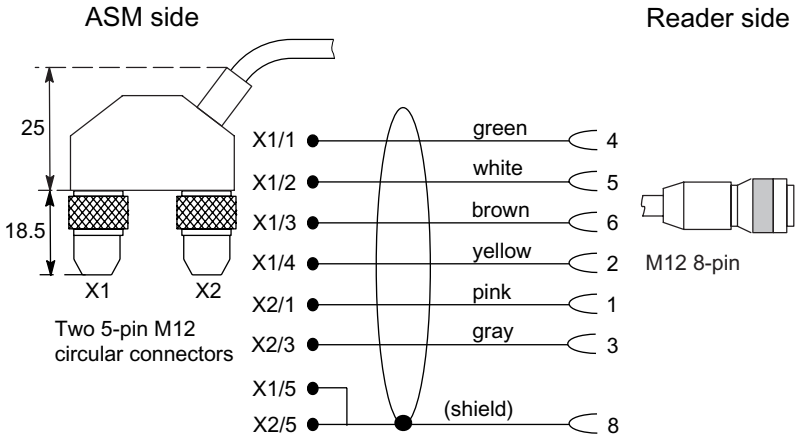

Figure 7-9 Connecting cable (2 m) ASM 452/473 ↔ RF310R reader with RS 422 (6GT2891-1CH20)

Cable installation

Signal	M12 (reader side)	Cable	X1 / Data	X2
24 V DC	1	Pink	-	1
TX -	2	Yellow	4	-
GND	3	Gray	-	3
TX +	4	Green	1	-
RX +	5	white	2	-
RX -	6	brown	3	-
-			-	-
Shield	8 + terminal piece	Shield	5	5

Cable installation ASM 452/473 ↔ RF310R reader with RS 422 (6GT2891-1CH20)

A reader cable connector with screw-type terminals is provided for users who want to individually pre-assemble their own cables (see figure below). Cables and reader cable connectors can be ordered from the MOBY catalog.

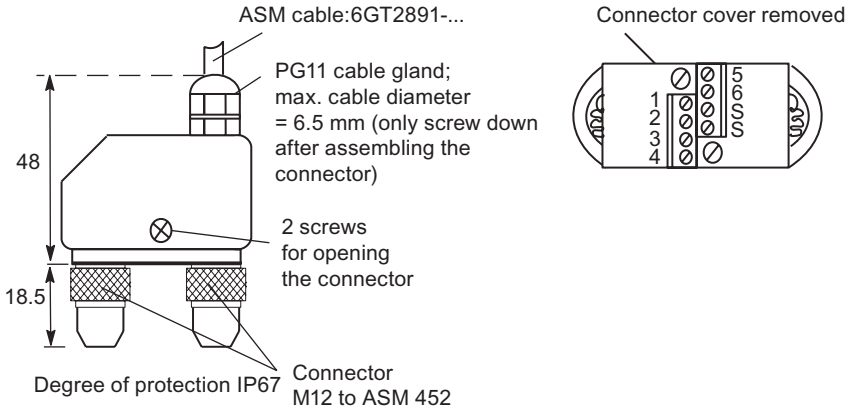

Figure 7-10 Cable connector ASM 452/473 ↔ RF310R reader with RS 422 (6GT2090-0BC00)

Pin assignment for ASM 452/473 cable connector

Connector pin	Connection to pin of the reader	Wire color
1	4	Note data sheet provided by the manufacturer
2	5	
3	6	
4	2	
5	3	
6	1	
	-	
S	8 + terminal piece	
Pin 7 must not be connected.		

PROFIBUS cable with 24 V supply

The ASM 452 can also be operated with the "green" PROFIBUS cable. It is important to ensure that a 24 V cable is connected from X12 to X13. The 24 V cable can be connected to pins 5 and 6 in plug X12.

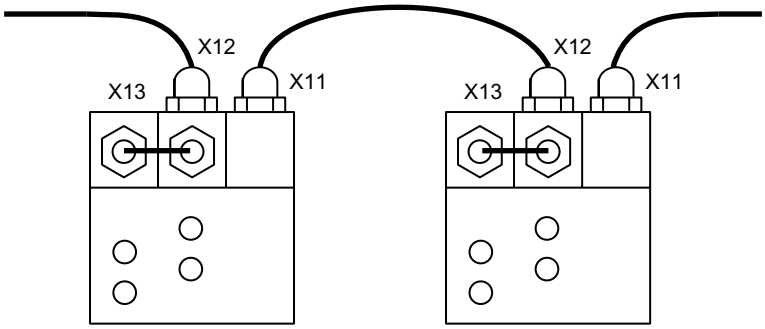

Figure 7-11 PROFIBUS cable with 24 V supply

PROFIBUS address and terminating resistor

You must remove the connector plate from the ASM before you set the PROFIBUS address or connect the terminating resistor. The connector plate covers the DIL switch. The position of the DIL switch in ASM is shown in the figure below with one setting example for each case.

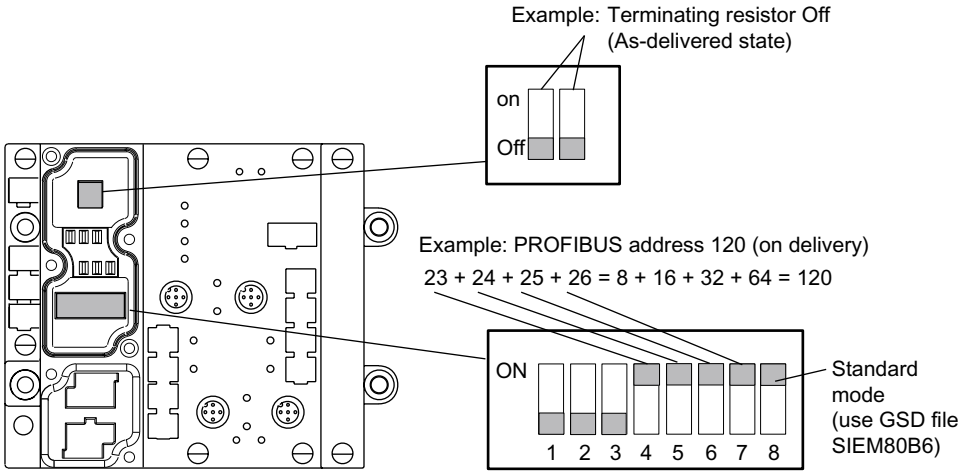

Figure 7-12 Setting the PROFIBUS address/connecting the terminating resistor

Note

- The PROFIBUS address in ASM 452 must always match the PROFIBUS address defined in the configuring software for this ASM.
- To ensure that the terminating resistor functions correctly, you must always switch **both** DIL switches of the terminating resistor to "on" or "off".

7.2.4 Technical data

Technical data

Table 7-2 Technical data for ASM 452

	ASM 452 with FC 45
Serial interface to the user	PROFIBUS DP-V1
Procedure after connection	EN 50170 Vol. 2 PROFIBUS PG 11 cable gland PROFIBUS and power supply connectors are not included in the scope of delivery
Transmission rate	9600 baud to 12 Mbaud (automatic detection)
Max. block length	2 words cyclic/240 bytes acyclic
Serial interface to the RF3xxR	
Connector	2 x M12 coupler plug
Max. cable length	2 m = Standard length, 5 m, 10 m, 20 m and 50 m, (up to 1000 m on request)
Readers that can be connected	1x RF3xxR with RS 422 interface
Software functions	
Programming	Depending on the PROFIBUS DP master
Function blocks for SIMATIC S7	FC 45
Transponder addressing	Direct access via addresses
Commands	Initialize transponder, read data from transponder, write data to transponder
Multi-tag capability	No
S7 data structures via UDTs	Yes
Power supply	
Rated value	24 V DC
Permissible range	20 V to 30 V DC
Current consumption	Max. 180 mA; typ. 130 mA (without reader)
Digital inputs	none
Digital outputs	none
Ambient temperature	
During operation	0 °C to +55 °C
Storage and transport	-40 °C to +70 °C
Dimensions (W x H x D) in mm	134 x 110 x 55 (without bus connector)
Fixing	4 M5 screws; for mounting on any plate or wall
Weight, approx.	0,5 kg
Degree of protection	IP67
MTBF (at 40 °C)	30 • 104 hours = 34 years

7.2.5 PROFIBUS Diagnosis

PROFIBUS Diagnosis

The following table lists possible error indications with their meanings and provides remedies.

Table 7-3 LED indication for PROFIBUS diagnosis

"BF" LED	"SF"LED	Cause of error	Error correction
ON	*	• ASM 452 is in start-up mode.	-
		• The connection to the DP master has failed. • ASM 452 not detecting a baud rate.	• Check the PROFIBUS DP connection. • Check the DP master.
		• Bus interrupt • DP Master not functioning	• Check all cables on your PROFIBUS DP network. • Check whether the connector plugs for PROFIBUS DP are securely plugged into the ASM 452.
flashes	ON	• The configuration data sent to the ASM 452 by the DP master do not match the configuration of the ASM 452.	• Check the configuration of the ASM 452 (input/output, PROFIBUS address). • Correct GSD file being used? – SIEM80B6.GSD for ASM 452
flashes	Off	• ASM 452 has detected the baud rate, but is not being addressed by the DP Master. • ASM 452 has not been configured.	• Check the PROFIBUS address set on the ASM 452 or in the configuration software. • Check the configuration of the ASM 452 (station type).
ON	flashes	• There is a hardware defect in the ASM 452.	• Replace the ASM 452.

7.2.6 Dimensional drawings

Dimension drawing

The following figure shows the dimensional drawing of an ASM 452 with bus connectors. You must add the length of the PG cable gland and the radius of the cable used to the measured overall width and depth.

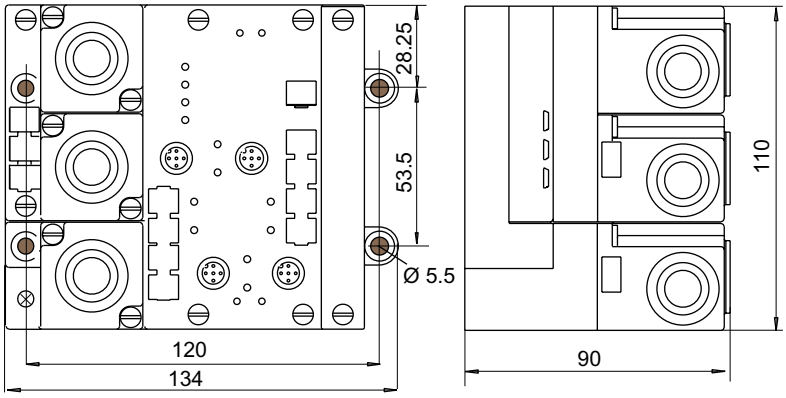

Figure 7-13 Dimensional drawing of ASM 452

Example of stripped lengths

The following diagram shows an example of stripped lengths. The lengths apply to all cables which can be connected to the connector plugs. You must twist any shield braid present, plug into a core end sleeve and cut off any excess.

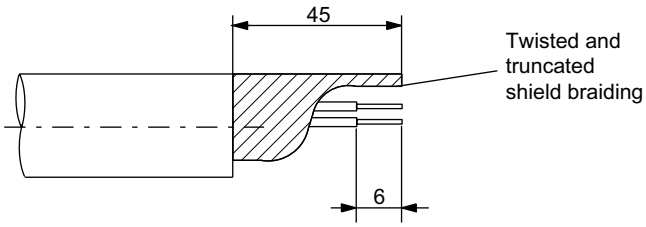

Figure 7-14 Length of stripped insulation for PROFIBUS cables

7.2.7 Ordering data

Ordering data

Table 7-4 Ordering data for ASM 452 and accessories

Product description	Order No.
ASM 452 interface module for PROFIBUS DP-V1, 1x RF310R with RS 422 interface, without connector for 24 V DC and PROFIBUS	6GT2002-0EB20
Accessories:	
Connector for PROFIBUS DP and 24 V supply	6ES7194-1AA00-0XA0
Connecting cable RF310R ↔ ASM 452	
Plug-in cable, pre-assembled, length: 2 m (standard length)	6GT2891-1CH20
Plug-in cable, pre-assembled, length: 5 m	6GT2891-1CH50
Opt. Cable connector without read/write device cable (for cable lengths > 20 m) ASM 452 ↔ reader	6GT2090-0BC00
M12 blanking cap for unused RF310R connection (1 pack = 10 pieces)	3RX9802-0AA00
CD "RFID Systems Software & Documentation" with FC 45, GSD file	6GT2080-2AA10
Replacement part: Connector plate; T functionality for PROFIBUS connection	 6ES7194-1FC00-0XA0
FC 45 Reference Manual German English French	 Available in electronic form on the CD "RFID Systems Software & Documentation"

The ASM 456 plug-in cables 6GT2891-0Fxxx can be used as extension cables.

7.3 ASM 456

7.3.1 Description

Field of application

The ASM 456 interface modules are slave modules for operating RF300 components via the PROFIBUS DP/DP-V1 on any control systems.

Figure 7-15 Interface module ASM 456 with ECOFAST connection block or M12, 7/8"

When operating the interface module on a SIMATIC S7, convenient function blocks are made available to the user.

Features

The ASM 456 replaces the ASM 452 in terms of functionality and provides a simplified connection system. You can continue to use the user software from ASM 452. Optimum data throughput can be achieved through acyclic data traffic on the PROFIBUS DP V1 even when using large PROFIBUS configurations. The minimum cyclic data load of the ASM 456 on the PROFIBUS provides the user with the guarantee that other PROFIBUS consumers (e.g. DI/DO) can still be processed at great speed.
Up to 2 readers can be operated in parallel on the ASM 456. The user can start a command in parallel on 2 readers (via the corresponding FB/FC).

The transponder data are accessed by means of physical addressing of the reader. In SIMATIC S7, the FC 45 is available for this purpose. The FC 45 provides the S7 user with a simple-to-use interface with powerful commands (processing one complete transponder with one command; command linking; S7 data structures via UDTs).

Other features

- Degree of protection IP67
- System integration with ECOFAST or M12, 7/8" concept
- T functionality, that is, a component can be replaced without adversely affecting other modules with regard to bus communication and voltage supply
- Standardized PROFIBUS user interface for identification systems with PIB (Proxy Ident Function Block; with later firmware version).
- Firmware update
- PROFIBUS interface module up to 12 Mbaud with automatic baud rate detection
- Parameterizable device-related diagnostics data with text display
- Support for I&M functionality (a mechanism for reading out information via the module and saving system information such as function, installation date, installation location, and comments.)

Design

The ASM 456 has the same housing as the distributed I/O system ET 200eco.

The ASM has a connection block for connecting up to the PROFIBUS DP which is available as an option and the ECOFAST version or M12, 7/8".

The following figure shows the basic design of the ASM 456.

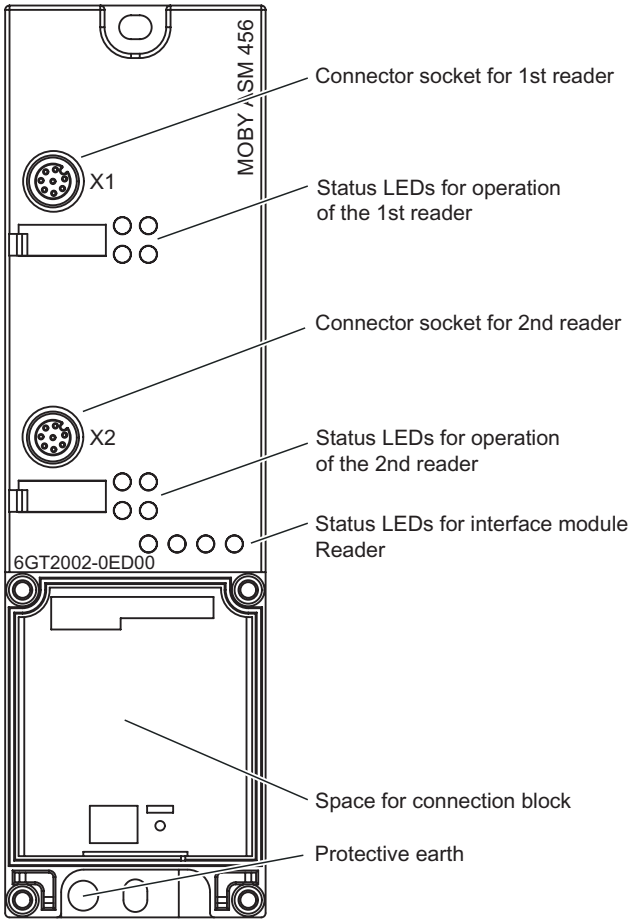

Figure 7-16 Basic design of the ASM 456

Configuration

The following figure shows how the ASM 456 is integrated in an automation system.

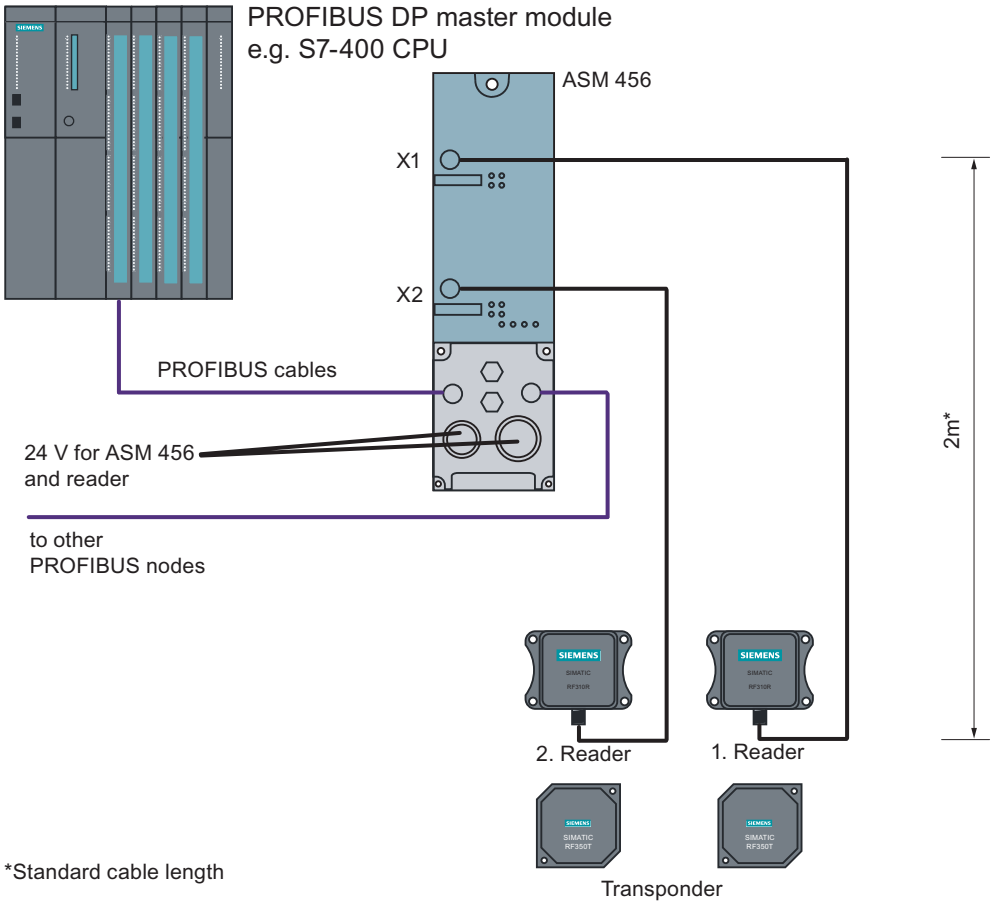

Figure 7-17 ASM 456 configurator

The ASM 456 is integrated into the hardware configuration by means of a GSD file. The ASM can then be configured using HW Config of SIMATIC Manager or another PROFIBUS tool (e.g. operating mode). The GSD file can be found on the "RFID Systems Software & Documentation" CD or on the Internet.

7.3.2 Setting the PROFIBUS address

Features

The PROFIBUS address defines the address at which the ASM 456 distributed I/O system is found on the PROFIBUS DP.

Requirements

- The PROFIBUS DP address for the ASM 456 is set on the connection block.
- Each address can be assigned only once on the PROFIBUS DP.
- The PROFIBUS address set must match the PROFIBUS address defined in the configuring software (for the ASM 456).
- Changes to the PROFIBUS DP address only take effect once the mains have been switched ON on the ASM 456.

Tools required for M12, 7/8” connection block

- Socket wrench 14 mm
- Screwdriver with 2.5 mm blade

Setting PROFIBUS DP addresses on connection block M12, 7/8”

Valid PROFIBUS DP addresses are 1 to 99.

1. Remove the two seal caps from the rotary switches (if necessary, use a 14 mm socket wrench).
2. Set the required PROFIBUS address on the rotary switches using a screwdriver.
   - Lower rotary switch: 1st position
   - Upper rotary switch: 10th position
3. Screw the two seal caps back onto the rotary switches (torque: 0.5 Nm to 0.8 Nm.)

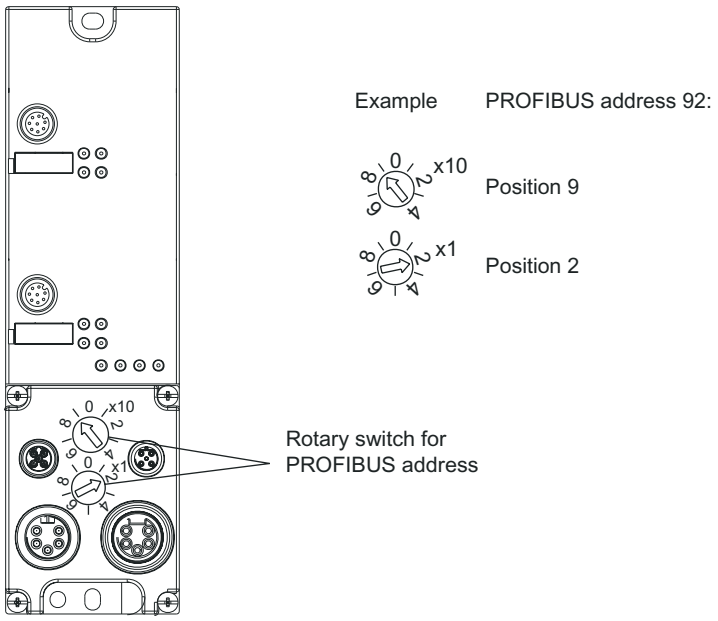

Figure 7-18 Setting PROFIBUS addresses on connection block M12, 7/8”

Setting PROFIBUS DP addresses on connection block ECOFAST

Valid PROFIBUS DP addresses are 1 to 99.

1. Loosen the screw connection of the configuration plug with the ECOFAST connection block and remove the plug.

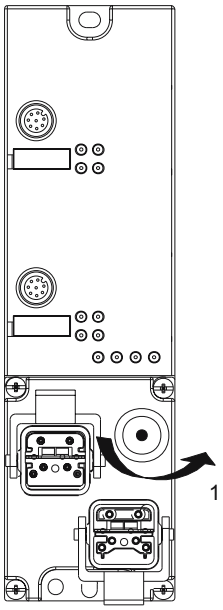

Figure 7-19 Loosening the configuration plug's screw connection

2. Loosen the screw connection for the cover cap on the configuration plug and remove the latter.

3. Set the PROFIBUS address using the DIL switches.

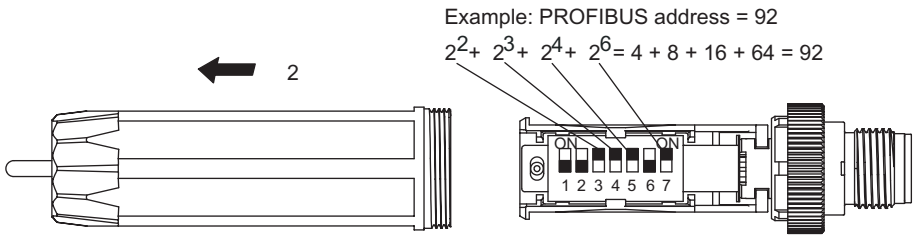

Figure 7-20 Setting PROFIBUS address on configuration plug

4. Screw the cover cap back down, plug the configuration plug onto the connection block and screw the configuration plug to the connection block.

7.3.3 Wiring up ASM 456

Wiring ECOFAST connector plugs

The table below contains the connector assignment for the ECOFAST connector plugs

Table 7-5 Connection assignment for ECOFAST connector plugs

Pin	Assignment	View of ECOFAST connector plug (wiring end for supply and loop-through connection)
A	PROFIBUS DP signal A	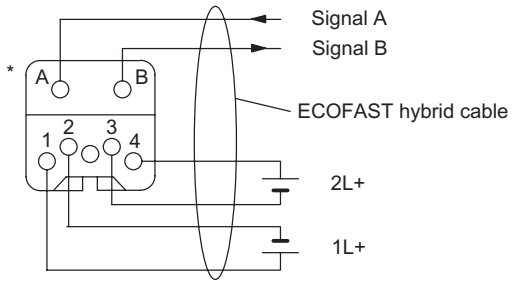
B	PROFIBUS DP signal B	
1	Electronics / encoder supply (1L+) (voltage supply for ASM 456 and reader)	
2	Ground for electronic / encoder supply (1M)	
3	Ground for load voltage supply (2M)	
4	Load voltage supply (2L+) (unused on ASM 456)	
*) You will find the assembly instructions in the packaging of the Han Brid Cu cable connector and/or Han Brid Cu cable socket.		

Wiring M12, 7/8” connector

The tables below contain the connector assignment for the M12, 7/8” connector:

Table 7-6 Connection assignment for M12 connector (PROFIBUS DP)

Pin	Assignment	View of M12 connector (wiring side)
1	Supply positive (P5V2) *	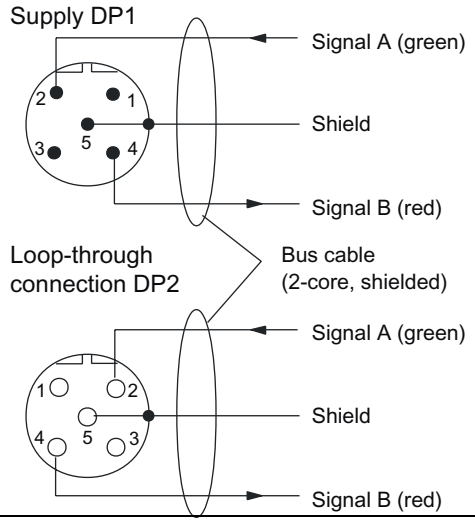
2	Data line A (RxD / TxD-N)	
3	Data reference potential (M5V2) *	
4	Data line B (RxD / TxD-P)	
5	Shield	
Thread	Shield	

*) Can only be used for the M12 terminating resistor. Looping the voltage through to the next connector via a 5-core cable is not permitted.

Table 7-7 Connection assignment for 7/8” connector (supply voltages)

Pin	Assignment	View of 7/8” connector (wiring side)
1	Ground for load voltage supply (2M)	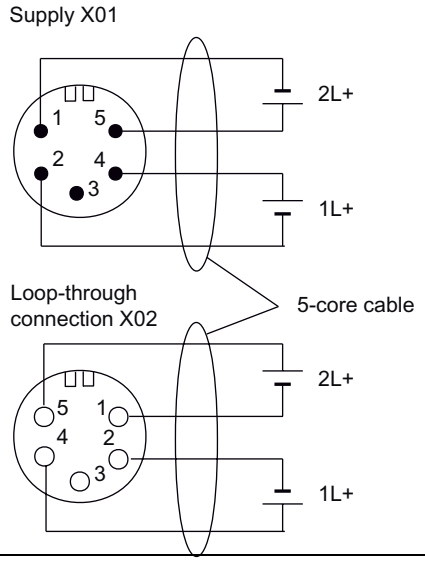
2	Ground for electronic / encoder supply (1M)	
3	PE	
4	Electronics / encoder supply (1L+) (voltage supply for ASM 456 and reader)	
5	Load voltage supply (2L+) (unused on ASM 456)	

Note

When connecting up the supply voltage, we recommend that the cable 6XV1 822-5B... (5 x 1.5 mm^2 pre-assembled with 7/8" connectors) is used.

If you want to assemble the cable yourself, then the conductor cross-section should be 1.5 mm^2.

Connecting the ASM 456 up to protective earth

1. Isolate the grounding cable and secure the cable lug.
2. Screw the cable lug down to the ASM 456 (M5 retaining bolt). The torque is 3 Nm.

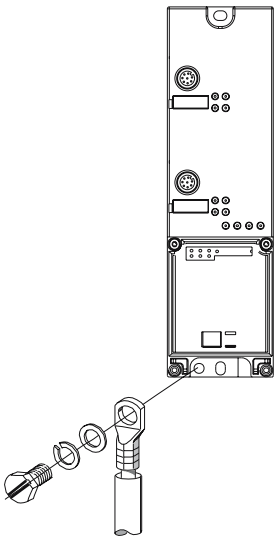

Figure 7-21 Connecting the ASM 456 up to protective earth

Connecting RF310 reader to ASM 456

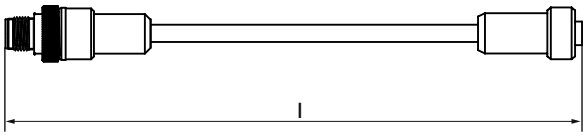

Figure 7-22 Connecting cable, l = 2 m, 5 m, 10 m, 20 m, 50m (6GT2891-0Fxxx)

Maximum cable length

The ASM 456 can be operated with any SLG configuration with a maximum cable length of 50 m.
Longer connecting cables of up to 1000 m are possible in some instances. The current consumption of the connected reader must however be taken into account. A number of cables must not be joined together to form a long cable due to the additional contact resistances.

Cable assembly by the customer

A reader connection plug with screw-type terminals is available for users who want to make their own cables.
Cables and reader cable connectors can be ordered according to the MOBY catalog.

For self-assembled cables, you will need cable to the following specifications:
7 x 0.25 mm^2
LiYC11Y 7 x 0.25
M12 connectors can be purchased from appropriate electrical retailers (e.g. Binder in Germany).

The pin assignment is listed in the following table.

Table 7-8 Pin assignment

M12 connector (male)	Pin	Signal	Wire color
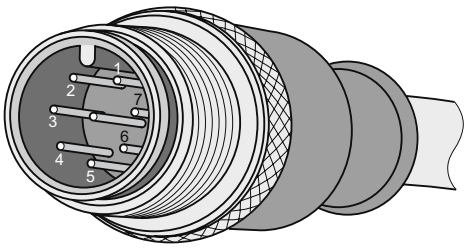	1	+24 V	Note data sheet provided by cable manufacturer
	2	−RxD	
	3	0 V	
	4	RxD	
	5	TxD	
	6	−TxD	
	7	Free	
	8	PE / shield	

7.3.4 Diagnosis using LEDs

The following figure shows details of the LEDs of the ASM 456.

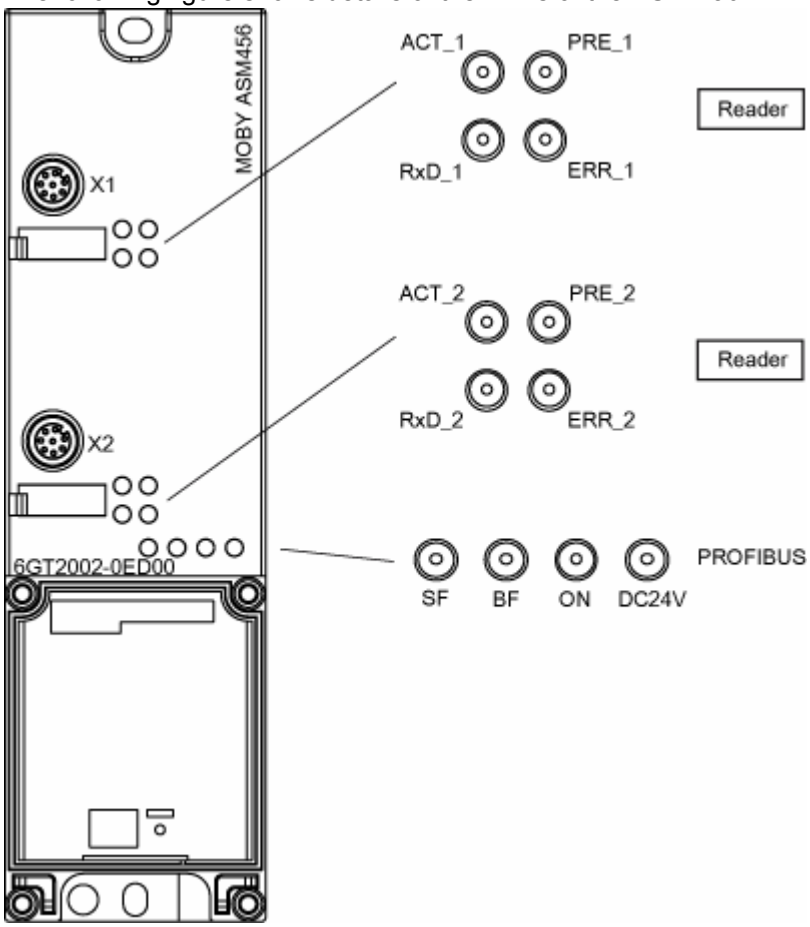

Figure 7-23 LEDs of the ASM 456

Table 7-9 Status LEDs for ASM 456

LEDs	Meaning*
ON	Lights up when there is logic voltage at the ASM (is generated by the 24 V supply voltage.)
24 V DC	Lights up when the 24 V supply voltage is connected to the ASM.
ACT_1, ACT_2	The corresponding reader is active in processing a user command.
ERR_1, ERR_2 *	A flashing pattern indicates the last error to occur.
PRE_1, PRE_2 **	Indicates the presence of a transponder.
RxD_1, RxD_2	Indicates live communication with the reader. May also indicate malfunctions on the transponder.
*) The meaning of the individual flash patterns and the associated fault descriptions can be found in the relevant FB and FC documentation. **) In multitag mode, this LED uses a flash interval to indicate the number of data media currently within the range of influence of the reader.	

Table 7-10 LED display for PROFIBUS diagnosis

BF	SF	Cause of error	Error handling
On	–	• ASM is in start-up mode.	–
		• Connection to DP Master failed. • ASM not detecting a baud rate	• Check the PROFIBUS DP connection. • Check the DP Master
		• Bus interrupt • DP Master not functioning	• Check all cables on your PROFIBUS DP network. • Check whether the connector plugs for the PROFIBUS DP are securely plugged into the ASM.
flashes	On	• The project data sent to the ASM by the DP Master do not match the configuration of the ASM.	• Check the project for the ASM (input/output, PROFIBUS address). • Correct GSD file being used?
flashes	–	• ASM has detected the baud rate, but is not activated by the DP Master. • ASM has not been assigned project plans.	• Check the PROFIBUS address set in ASM and/or in the project software. • Check the project for the ASM (station type).
On	flashes	• There is a hardware defect in the ASM.	• Replace the ASM.
Off	On	• Diagnosis available	• Evaluate the diagnostic information.
On	Off	• The set PROFIBUS address is incorrect or greater than 99.	• Set the address in the range 1 to 99 and carry out new ramp-up.
– = Status not relevant			

Other ASM operating modes are indicated by the PRE, ERR, ACT, SF and ON LEDs:

ON	SF	PRE_1	ERR_1	ACT_1	PRE_2	ERR_2	ACT_2	Description
On	Off	Off	Off	On	Off	Off	Off	Ramp-up active
Off	On	Off	On	Off	Off	Off	Off	Checksum error at ramp-up
Off	On	Off	Off	Off	Off	On	Off	Firmware invalid
On	On	On	On	On	On	On	On	LED test for approximately 4 seconds; otherwise firmware fault
Off	On	Off	On	On	Off	On	On	Checksum error at ramp-up
Off	On	On	On	On	Off	On	On	Checksum error of the firmware
Off	On	On	On	On	On	On	On	External RAM defective
Off	On	On	Off	On	On	On	On	DPC-RAM defective
Off	On	Off	On	On	On	On	On	ID error firmware
On	–	Off	1 x flash every 3 s	Off	Off	1 x flash every 3 s	Off	ASM successfully ramped up, waiting for reset command
On	–	–	Flashing	Rapid flashing	–	Flashing	Rapid flashing	Firmware update; alternate flashing of the error LEDs at approximately 1 Hz
– = not relevant								

7.3.5 Technical data

Table 7-11 Technical data for ASM 456

Serial interface to the user	PROFIBUS DP-V1
Procedure after connection	EN 50170 Vol. 2 PROFIBUS M12 and 7/8" technology / ECOFAST
Transmission rate	9600 baud to 12 Mbaud (automatic detection)
Max. block length	2 words cyclic/240 bytes acyclic
Serial interface to the reader	
• Connector	2 x M12 coupler plug
• Max. cable length	1000m, reader dependent; 2 m = Standard length; (up to 1000 m on request) Extension cable = 2 m, 5 m, 10 m, 20 m and 50 m
• Readers that can be connected	2 x reader
Software functions	
Programming	Depending on the PROFIBUS DP master
Function blocks:	
• SIMATIC S5	–
• SIMATIC S7	FC 45 (normal addressing without multitag)
Transponder addressing	Direct access via addresses
Commands	Initialize transponder, read data from transponder, write data to transponder, etc.
Supply voltage: [2]	
• Rated value	24 V DC
• Permissible range	20 V to 30 V DC
Current consumption [1]	Max. 800 mA; typ. 80 mA (without reader)
Galvanic isolation	Yes
Ambient temperature	
• During operation	0 °C to +55 °C
• Storage and transport	–40 to +70 °C
Dimensions (W x H x D) in mm	
• ASM 456 only	60 x 210 x 30
• ASM 456 with ECOFAST connection block	60 x 210 x 60
Weight, approx.	210 g
Degree of protection	IP67
MTBF (at 40 °C)	122 years

1) The power supply must deliver the required current of up to 800 mA for brief power failures ≤ 20 ms.
2) All supply voltages and signal voltages must be protective low level voltage (SELV/PELV acc. to EN 60950)
24V DC supply: Safety (electrical) isolation of low voltage (SELV / PELV acc. to EN 60950)

7.3.6 Dimensional drawings

The following figure shows the dimensional drawing of an ASM 456 with bus connection block.

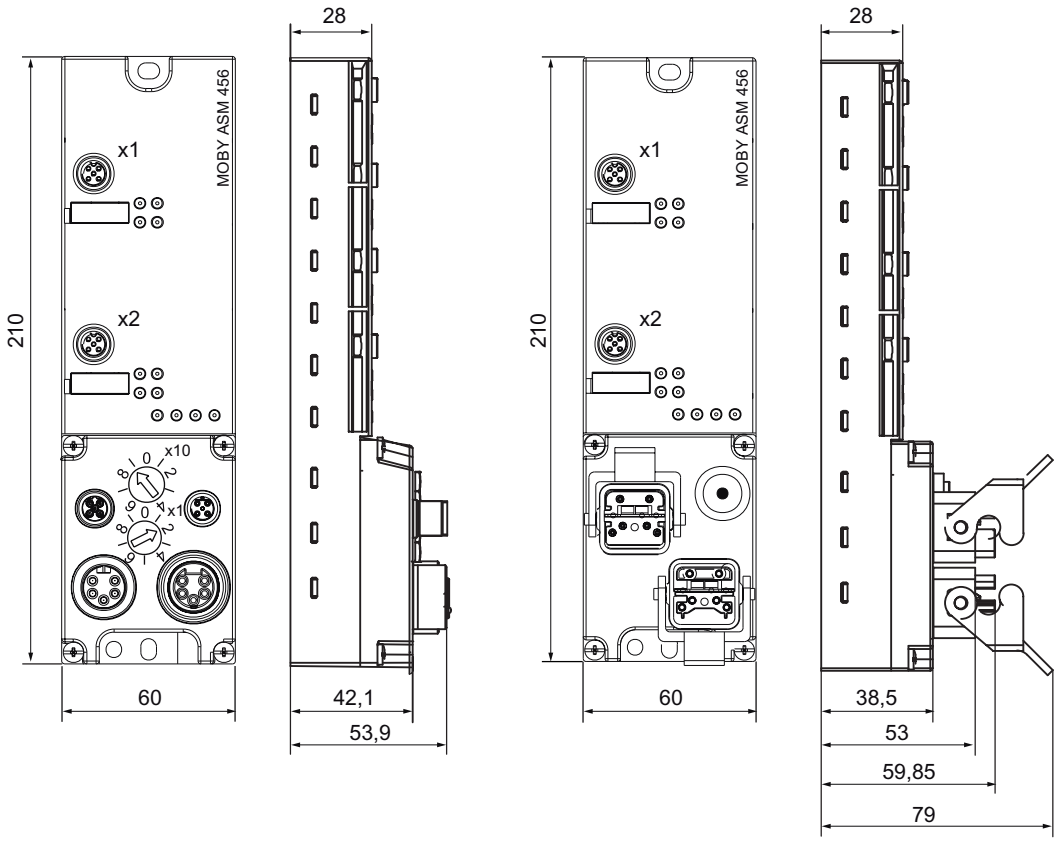

With connection block M12, 7/8"

With connection block ECOFAST

Figure 7-24 Dimensional drawing of ASM 456 (in mm)

7.3.7 Ordering data

Table 7-12 Ordering data for ASM 456

Product description	Order number
ASM 456 interface module for PROFIBUS DP V1 max. 2 readers can be connected	6GT2002-0ED00
Accessories for ECOFAST connection:	
Connection block ECOFAST	6ES7194-3AA00-0AA0
PROFIBUS ECOFAST hybrid plug 180	
with pin insert (5 per pack)	6GK1905-0CA00
with socket insert (5 per pack)	6GK1905-0CB00
PROFIBUS ECOFAST termination plug with terminating resistor	6GK1905-0DA10
ECOFAST hybrid cable, pre-assembled	6XV1830-7B... 1)
ECOFAST hybrid cable, not pre-assembled, sold by the meter	6XV1830-7AH10
Accessories for M12 7/8" connection:	
Connection block M12	6ES7194-3AA00-0BA0
M12 terminal resistor for PROFIBUS (5 per pack)	6GK1905-0EC00
PROFIBUS cable with M12 connectors, pre-assembled	6XV1830-3D... 1)
Cable for supply voltage with pre-assembled 7/8" connectors	6XV1822-5B... 1)
PROFIBUS FC standard non-pre-assembled cable; max. length 1000 m	6XV1830-0EH10
PROFIBUS M12 connector plug (5 per pack)	
with pin insert	6GK1905-0EA00
with socket insert	6GK1905-0EB00
Connector plug 7/8" for voltage (5 per pack)	
with pin insert	6GK1905-0FA00
with socket insert	6GK1905-0FB00
Cable accessories:	
Plug-in cable, pre-assembled, length 2 m (standard length)	6GT2891-0FH20
Plug-in cable, pre-assembled, length 5 m	6GT2681-0FH50
Plug-in cable, pre-assembled, length 10 m	6GT2681-0FN10
Plug-in cable, pre-assembled, length 20 m	6GT2681-0FN20
Plug-in cable, pre-assembled, length 50 m	6GT2681-0FN50
Angled extension for direct connection of reader to ASM 456 or for extending any plug-in cables	6GT2891-0JH20
CD "RFID Systems Software & Documentation" with FC 45, GSD file	6GT2080-2AA10
Other accessories for ASM 456 (network components)	ET 200eco manual 6ES7198-8GA00-8AA0
Description of FC 45 (for ASM 456) German English French	Available in electronic form on the CD "RFID Systems Software & Documentation"
1) These cables are available in different lengths. See Catalog IK PI for more details	

7.4 ASM 473

7.4.1 Features

Field of application

The ASM 473 interface module is an RF300 module for SIMATIC S7. It can be plugged into the ET 200X distributed I/O station and DESINA. ET 200X is operated by the user over PROFIBUS DP V1. An S7-300 or S7-400 with integrated PROFIBUS connection can be used as the controller.

ASM 473 supplements the SIMATIC S7 interface module ASM 475. The IP67 degree of protection means that it can be installed and operated in the process without the need for an additional protective housing.

To operate the ASM 473, an ET 200X basic module BM 141/142 with the order number 6ES7141-1BF11-0XB0 or 6ES7142-1BD21-0XB0 or a BM 143 is required.

The transponder data are accessed by means of physical addressing of the transponder.

For operation in a SIMATIC S7, the function FC 45 is available. The hardware of the ASM 473 is configured with an object manager (OM) that is integrated in the SIMATIC Manager.

Figure 7-25 Interface module ASM 473

Other features:

- Up to 7 ASM 473 interface modules can be operated simultaneously in an ET 200X station.
- Any other I/O modules from the ET 200X spectrum can be operated with the ASM 473.

7.4.2 Pin assignment and display elements

Pin assignments

The figure below illustrates the pin assignment for the read/write device and the display elements.

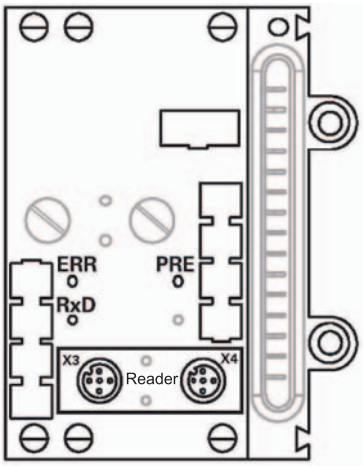

Socket	Pin assignment (reader)	
X3	1	+RxD
	2	+TxD
	3	-TxD
	4	-RxD
	5	PE
X4	1	+24 V
	2	n. c.
	3	0 V
	4	n. c.
	5	PE

LEDs for PROFIBUS DP

General indicators (SF, BF, ON, 24VDC) are located on the basic module of the ET 200X.

LEDs for MOBY

RxD: Reader active with command
PRE: Indicates the presence of a transponder
ERR: Error indicated by flashing sequence

The following ASM states are also indicated with the LEDs "PRE" and "ERR":

PRE	ERR	Description, Causes, Remedy
OFF/ON	ON (perm.)	Hardware is defective (RAM, flash,...)
ON	OFF	Charger is defective (can only be repaired in the factory).
2 Hz	OFF	Firmware loading is active or no firmware detected → Load firmware → ASM must not be switched off until loaded
2 Hz	2 Hz	Firmware loading terminated with errors → Restart required → Load firmware again → Check update files
5 Hz	5 Hz	Operating system error → Switch ASM or ET 200X base station OFF/ON
OFF	1 x flash every 2 s	ASM has booted and is waiting for a RESET (init_run) from the user

Figure 7-26 Interfaces and indicators of the ASM 473 for RF300

7.4.3 Configuration

Configuration

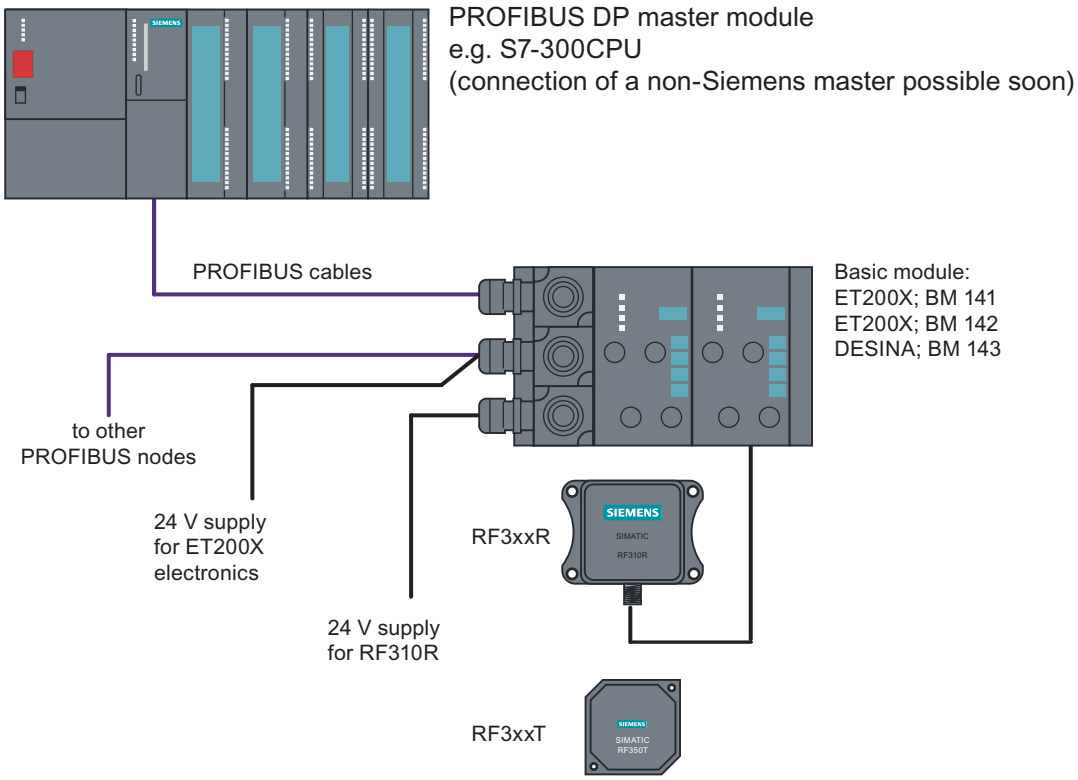

Figure 7-27 Example - Configurator for ASM 473

Note

It differs from ASM 452 in that for ET 200X the 24 V supply must be connected to the PROFIBUS connector **and** on the load voltage connector (see the ET 200X manual).

Basic module - Requirements for operation of ASM 473

The following table indicates the status of the ET 200X basic module of 10/2002. The functionality of new basic modules is stored in HW Config of the SIMATIC Manager.

Table 7-13 Requirements for operation of ASM 473

Order number of the ET 200X basic module	For operation with ASM 473 (6GT2002-0HA00)*	For operation with ASM 473 PARAM (6GT2002-0HA10)
6ES7141-1BF00-0XB0	No	No
6ES7141-1BF00-0AB0	Yes	Yes
6ES7141-1BF01-0XB0	No	No
6ES7141-1BF10-0XB0	No	No
6ES7141-1BF11-0XB0	Yes	Yes
6ES7141-1BF40-0AB0	Yes	Yes
6ES7142-1BD10-0XB0	No	No
6ES7142-1BD11-0XB0	No	No
6ES7142-1BD20-0XB0	No	No
6ES7142-1BD21-0XB0	Yes	Yes
6ES7142-1BD22-0XB0	No	Yes**
6ES7143-1BF00-0AB0	Yes	Yes
6ES7143-1BF00-0XB0	Yes	Yes
6ES7147-1AA00-0XB0	No	No
6ES7147-1AA01-0XB0	No	Yes

* Discontinued

** Notes on operation:
In HW Config, please parameterize the module 6ES7142-1BD21-0XB0.

Example for a maximum configuration of ASM-473 on an ET 200X

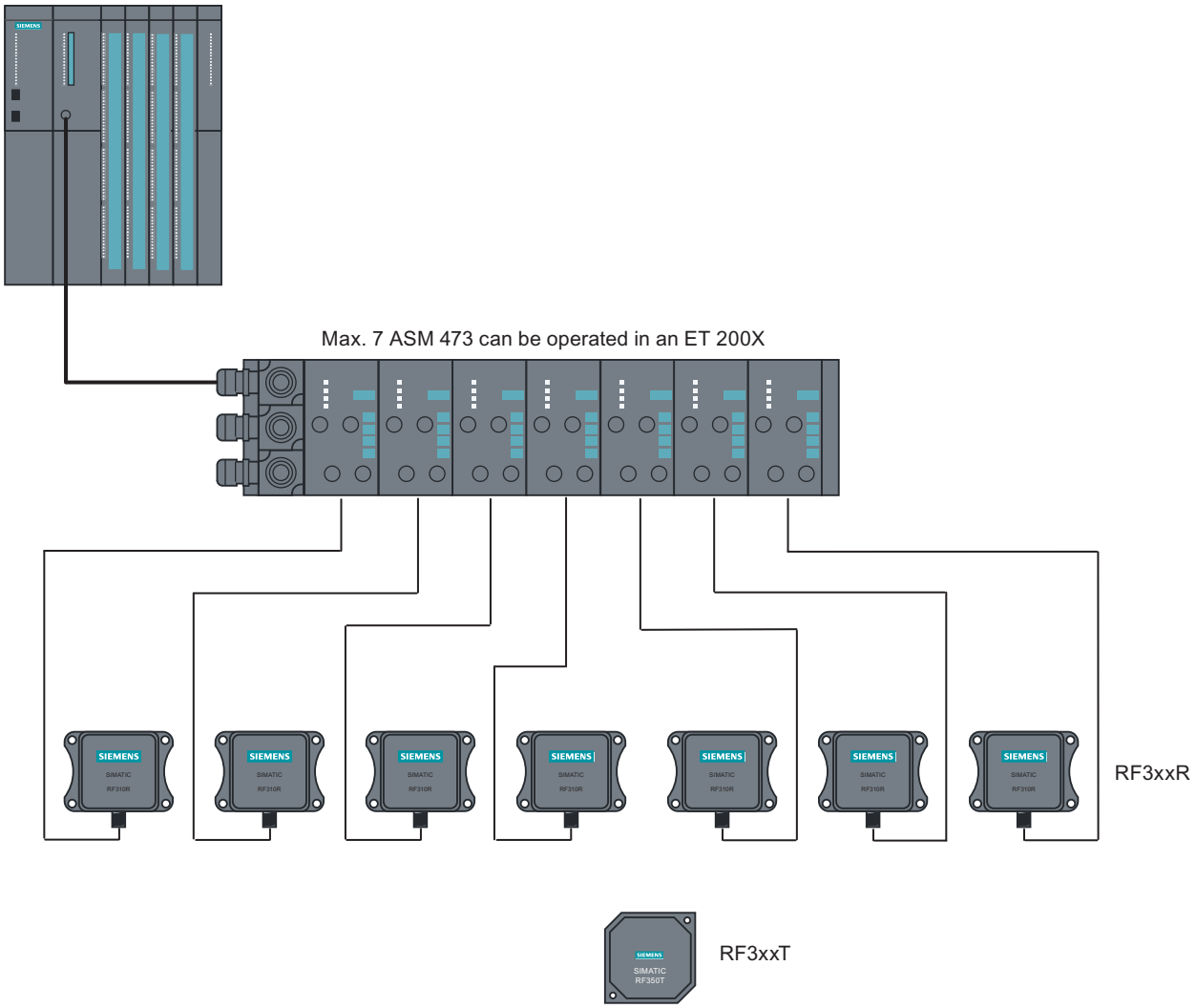

Figure 7-28 Example for a maximum configuration of ASM 473 on an ET 200X

Depending on the PROFIBUS master, up to 123 ET 200X modules can be run on one PROFIBUS branch.

Hardware configuration

The ASM 473 is integrated in the hardware configuration of the SIMATIC Manager by calling Setup.exe in the directory daten\S7_OM on the "RFID Systems Software & Documentation" CD. Currently, the ASM 473 cannot be integrated in masters of other manufacturers.

Reader connection system

A reader always occupies the two M12 connection sockets X3 and X4 on the ASM 473. A prefabricated cable makes it easy to connect the reader. The standard version of the connecting cable is 2 m in length. Other cable lengths are available on request.
For customers who want to assemble their own cables, an ASM cable connector with screw-type terminals is available. Cables and ASM cable connectors can be ordered from the MOBY catalog.

7.4.4 Technical data

Technical data

Table 7-14 Technical data for ASM 473

Interface for ET 200X	SIMATIC S7 I/O bus cyclic/acyclic services
Communication	2 words cyclic/238 bytes acyclic
Command buffer in ASM	142 x 238 bytes
Serial interface to the reader	
• Connector	2 x M12 coupler plug
• Max. cable length	2 m = standard length; other pre-assembled cables = 5 m, (up to 1000 m on request)
• Readers that can be connected	1 x reader RF310R with RS 422
Software functions	
Programming	Depending on the PROFIBUS DP master
Function blocks for SIMATIC S7	FC 45
MDS addressing	Direct access via addresses
Commands	Initialize transponder, read data from transponder, write data to transponder, etc.
PROFIBUS Diagnosis	Yes; in accordance with ET 200X basic station
S7 diagnostics	Yes, can be called up via S7 OM
Reloadable firmware	Yes, via S7 OEM
Power supply [1]	
• Rated value	24 V DC
• Permissible range	20.4 V to 28.8 V DC
Current consumption	Typ. 75 mA; max. 500 mA (or see Technical Data of the connected reader)
Power dissipation of the module	Typically 1.6 W
Digital outputs/inputs	Via expansion modules from the ET 200X spectrum
Ambient temperature	
• During operation	0 °C to +55 °C
• Storage and transport	-40 °C to +70 °C
Dimensions (W x H x D) in mm	
• Single unit	87 x 110 x 55
• Width module	60 x 110 x 55
Fixing	2 M5 screws (customer side) 2 M3 screws (product side)
Degree of protection	IP67
Weight, approx.	0.275 kg

For installation instructions and general technical data, see the ET 200X manual.

7.4.5 Dimensional drawings

Dimension drawing for mounting holes

The figure below shows the dimensions for the position of the holes for the fixing screws for a basic module and an ASM 473 expansion module.

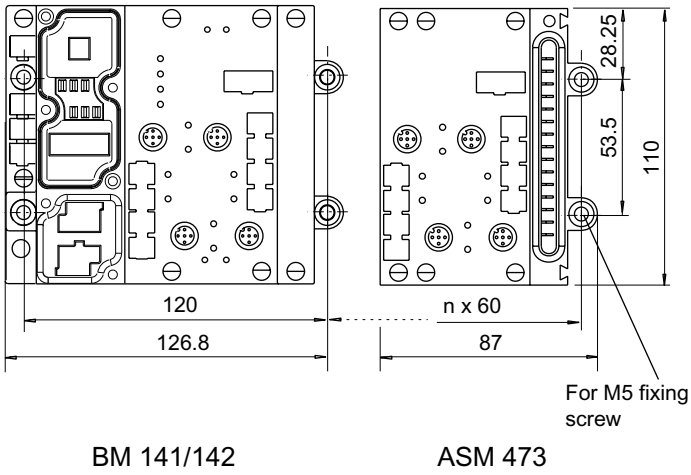

n = Number of expansion modules

Figure 7-29 Dimensions for fixing holes for basic modules and expansion modules

Example of stripped lengths

The following diagram shows an example of stripped lengths. The lengths apply to all cables which can be connected to the connector plugs. You must twist any shield braid present, plug into a core end sleeve and cut off any excess.

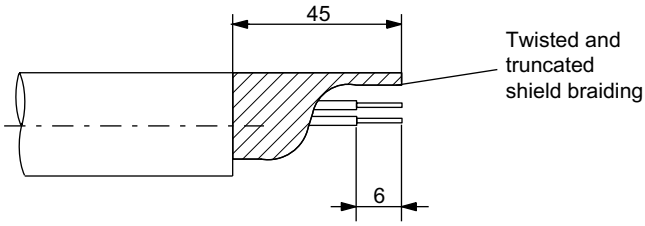

Figure 7-30 Length of stripped insulation for PROFIBUS cables

7.4.6 Ordering data

Ordering data

Table 7-15 Ordering data for ASM 473

	Order No.
Interface module ASM 473 1x RF310R reader with RS 422 interface can be connected	6GT2002-0HA10
Accessories:	
Connecting cable ASM 473 ↔ Reader RF310R	
Plug-in cable, pre-assembled, length 2 m (standard length)	6GT2491-1CH20
Plug-in cable, pre-assembled, length 5 m	6GT2491-1CH50
Opt. Cable connector without reader cable (for cable lengths > 20 m) ASM 473 ↔ Reader	6GT2090-0BC00
CD "RFID Systems Software & Documentation" with FC 45, GSD file	6GT2080-2AA10
FC 45 Reference Manual German English French	Available in electronic form on the CD "RFID Systems Software & Documentation"

7.5 ASM 475

7.5.1 Features

Field of application

The ASM 475 interface module acting as the link between all RF300 systems and SIMATIC S7-300 performs the functions of a communication module. It can be operated centrally in the S7-300 or decentrally in an ET200M.

As many as eight ASM 475 interface modules can be plugged into one SIMATIC S7-300 rack and operated. In a configuration with several racks (max. four), the ASM 475 can be plugged into and operated on any rack. This means that as many as 32 ASMs can be operated in the maximum configuration of a SIMATIC S7-300. The ASM can also be operated in the ET 200M distributed I/O on PROFIBUS. Operation in an S7-400 environment is therefore problem-free. Up to 7 ASMs can be operated on each ET200M.

Error messages and operating states are indicated by LEDs.
A configuration that is resistant to interference is possible due to electrical isolation between the read/write device and the SIMATIC S7-300 bus.

Figure 7-31 Interface module ASM 475

The ASM 475 with the order number 6GT2002-0GA10 is a parameterizable module. The basic functions of the module are then already specified when the module is configured in HW Config (e.g. standard addressing).

The data in the MDS is accessed direct by means of physical addresses using the ASM 475. Operation in a SIMATIC S7 is controlled by the function FC 45.

ASM 475 and FC 45 form a unit that is used for reading the data of the MDS easily and at optimal speed.

7.5.2 Indicators

Bezel and indicator elements

The figure below illustrates the bezel of the ASM 475 and the inside of the front door complete with the associated connection diagram. The read/write devices must be connected to the ASM in accordance with the connection diagram.

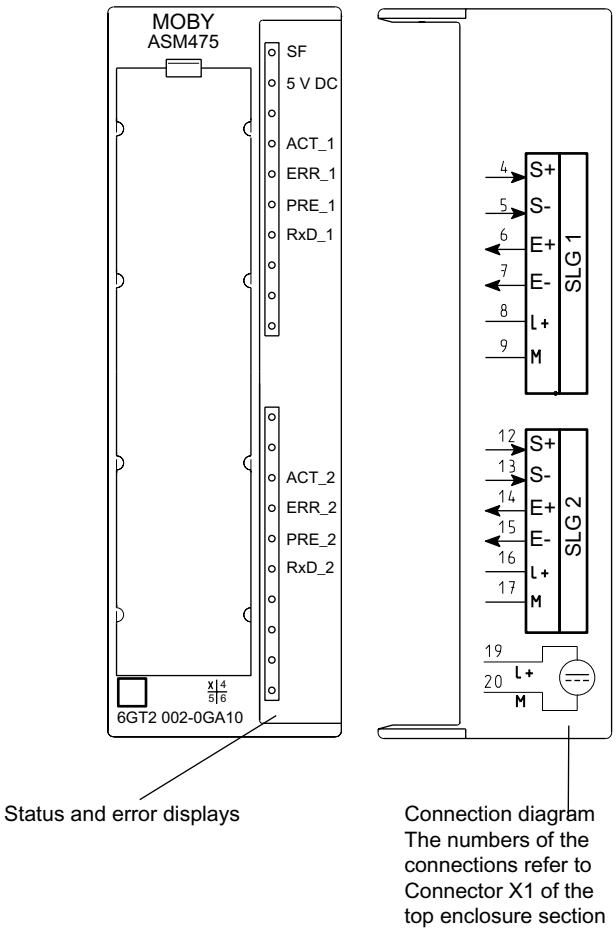

Figure 7-32 Bezel and inside of the front door of the ASM 475

Display elements on the ASM

Table 7-16 Function of the LEDs on the ASM 475

Light emitting diode	Meaning
SF	System fault (hardware error on ASM)
DC 5V	24 V are connected to ASM and the 5 V voltage on ASM is OK.
ACT_1, ACT_2	The corresponding reader is active in processing a user command.
ERR_1, ERR_2	A flashing pattern indicates the last error to occur. This display can be reset using the parameter Option 1.
PRE_1, PRE_2	Indicates the presence of a transponder.
RxD_1, RxD_2	Indicates live communication with the reader. In the event of a fault on the reader, this display may also be lit.

On the ASM 475, further operating states are indicated with the LEDs PRE, ERR and SF:

Table 7-17 Operating status display on ASM 475 via LEDs

SF	PRE_1	ERR_1	PRE_2	ERR_2	Meaning
ON	OFF/ON	ON (perm.)	OFF/ON	ON (perm.)	Hardware is defective (RAM, Flash, etc.)
ON	OFF	ON	OFF	OFF	Charger is defective (can only be repaired in the factory).
OFF	2 Hz	OFF	2 Hz	OFF	Firmware loading is active or no firmware detected • Firmware download • ASM must not be switched off
OFF	2 Hz	2 Hz	2 Hz	2 Hz	Firmware loading terminated with errors • Restart required • Load firmware again • Check update files
Any value	5 Hz	5 Hz	5 Hz	5 Hz	Operating system error • Switch ASM off/on
OFF	OFF	1 flash every 2 s	OFF	1 flash every 2 s	ASM has booted and is waiting for a RESET (init_run) from the user.

7.5.3 Configuration

Configuration

Centralized configuration with SIMATIC S7-300

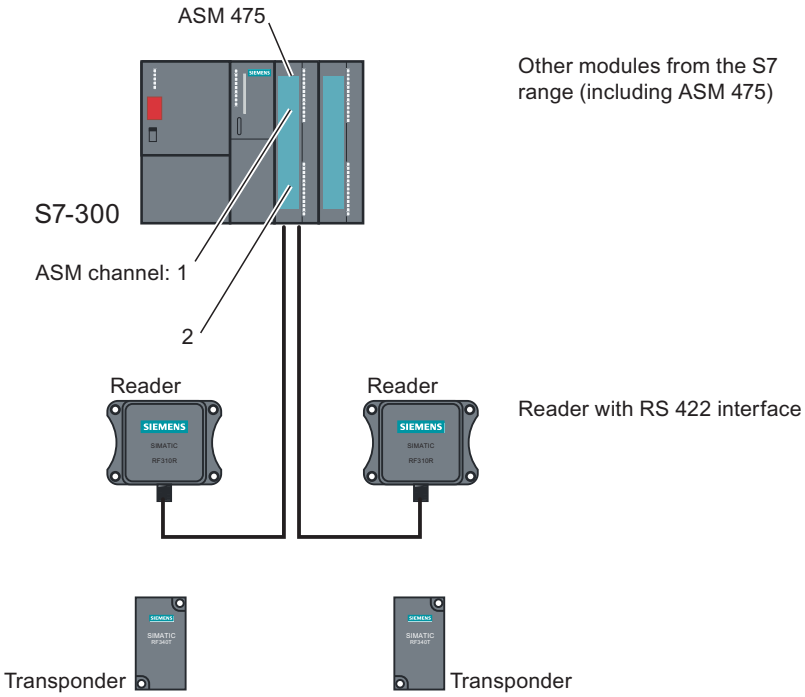

Figure 7-33 Configurator for ASM 475 with RF310R reader (centralized configuration)

Distributed configuration with ET200M

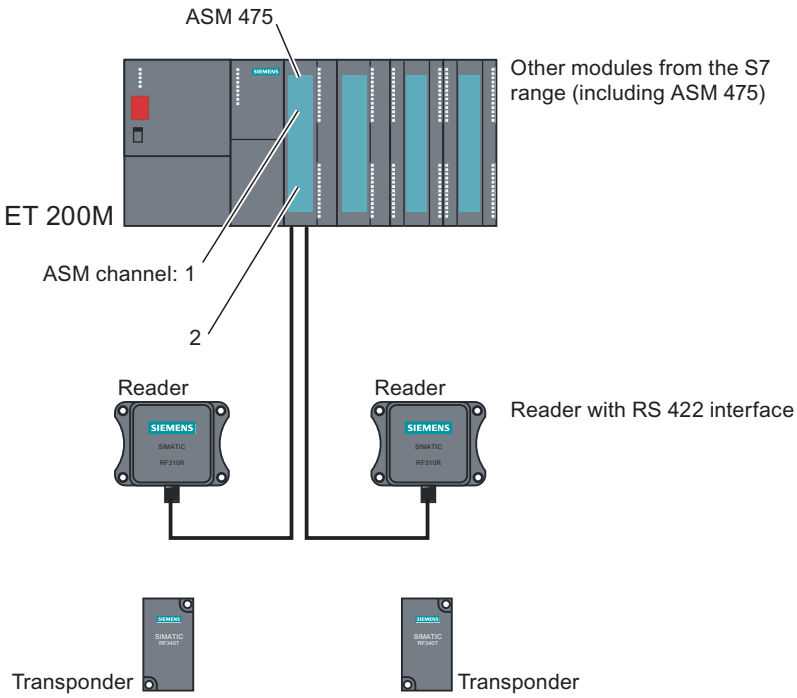

Figure 7-34 Configurator for ASM 475 with RF310R reader (distributed configuration)

Reader connection system

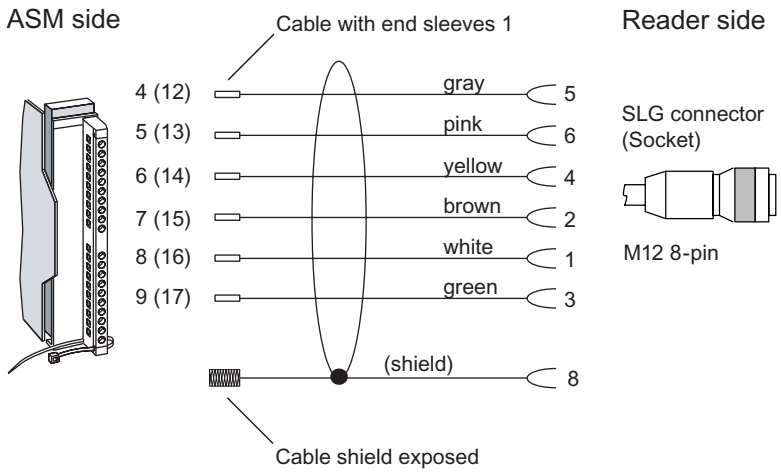

[1] 6GT2891-0E... with straight SLG connector (standard)

Figure 7-35 Installation of connecting cable ASM 457-RF300-Reader with RS 422

Cable installation

Signal	M12	Cable	Finely-stranded conductor	Labeling
24 V DC	1	white	1	1 Reader 2 8 -16
TX -	2	brown	2	1 Reader 2 7-15
GND	3	Green	3	1 Reader 2 9-17
TX +	4	Yellow	4	1 Reader 2 6-14
RX +	5	Gray	5	1 Reader 2 4-12
RX -	6	Pink	6	1 Reader 2 5-13
Shield	8 + terminal piece	-	8	

Cable assignment for connection of an RF300 reader to ASM 475

7.5.4 Technical data

Technical data

Table 7-18 Technical data for ASM 475

	ASM 475 with FC 45
Serial interface for SIMATIC S7-300 or ET200M	I/O bus; cyclic and acyclic services
Communication	2 words cyclic/238 bytes acyclic
Command buffer in ASM 475	70 x 238 bytes per RF310R reader
Serial interface to the reader	
Connector	Via screw-type terminal on front connector The front connector is not included in the scope of supply.
Max. cable length	Pre-assembled cables = 2 m, 5 m, (up to 1000 m on request)
Readers that can be connected	2 x RF310R reader with RS 422 parallel operation
Software functions	
Programming	Depending on the PROFIBUS DP master
Function blocks for SIMATIC S7	FC 45
Transponder addressing	Direct access via addresses
Commands	Initialize transponder, read data from transponder, write data to transponder
Multitag mode	No
S7 data structures via UDTs	Yes
Power supply	
Rated value	24 V DC
Permissible range	20.4 V to 28.8 V DC
Current consumption	
Without reader for U = 24 V DC, max.	350 mA
With reader connected, max.	500 mA, per connected reader
Power dissipation of the module, typ.	2 Watts
Current consumption from I/O bus, max.	80 mA
Electrical isolation between S7-300 and RF300	Yes
V24 fuse to reader	Yes, electronic
Ambient temperature	
During operation Horizontal installation of SIMATIC Vertical installation of SIMATIC	 0 to +60 °C 0 to +40 °C
Storage and transport	-40 °C to +70 °C
Dimensions (W x H x D) in mm	40 x 125 x 120
Weight, approx.	0,2 kg

7.5.5 Ordering data

Ordering data

Table 7-19 Ordering data for ASM 475

	Order No.
ASM 475 interface module for SIMATIC S7 2 x RF310R reader with RS 422 can be connected in parallel, without front connector	6GT2002-0GA10
Accessories:	
Front connector (1 x per ASM)	6ES7392-1AJ00-0AA0
Connecting cable ASM 475 ↔ RF310R	
Plug-in cable, pre-assembled, length: 2 m (standard length)	6GT2891-0EH20
Plug-in cable, pre-assembled, length: 5 m	6GT2891-0EH50
Opt. Cable connector without reader cable (for cable lengths > 50 m) ASM 475 ↔ reader	6GT2090-0BC00
Terminal element (1 x per reader cable)	6ES7390-5BA00-0AA0
Shield connecting element	6ES7390-5AA00-0AA0
CD "RFID Systems Software & Documentation" with FC 45, S7 object manager	6GT2080-2AA10
FC 45 Reference Manual German English French	Available in electronic form on the CD "RFID Systems Software & Documentation"

The ASM 456 plug-in cables 6GT2891-0Fxxx can be used as extension cables.

System diagnostics

8

8.1 Overview

Extended diagnostic functions with SIMATIC RF300

With SIMATIC RF300, extended diagnostic functions are available which simplify start-up and maintenance.

These diagnostic data are accessed using the FC 45 function with the SLG STATUS and MDS STATUS commands. These two commands can each be called in various modes (subcommands) for which corresponding data structures (UDTs) are defined.

Command	Mode (subcommand)	Meaning
SLG STATUS	01	Hardware and firmware configuration, parameterization status
	06	Communication error counter, current command status
MDS STATUS	01	Serial number of the tag (UID), memory configuration EEPROM write-protection status
	02	Serial number of the tag (UID), HF field strength value, communication error counter, presence counter (duration)

Overview of the diagnostic functions

8.2 Reader diagnostics with SLG STATUS

The SLG STATUS command can be used to scan the status and diagnostics data of the reader.

SLG STATUS (mode 01), UDT110

HW	ASCII	Type of hardware	
		(31 to 38 hex)	
HW-V	Binary value	HW version	
		0 to FF hex	= Version (high byte): Unused
		0 to FF hex	= Version (low byte)
Url-V	Binary value	Version of loader	
		0 to FF hex	= Version (high byte)
		0 to FF hex	= Version (low byte)
FW	ASCII format	Type of firmware	
FW-V	Binary value	Firmware version	
		0 to FF hex	= Version (high byte)
		0 to FF hex	= Version (low byte)
TR	Binary value	Type of driver	"1" = 3964R
TR-V	Binary value	Version of driver	
		0 to FF hex	= Version (high byte)
		0 to FF hex	= Version (low byte)
SS	Binary value	RS 232 / RS 422	
		01 hex	= RS 422
Baud	Binary value	Baud rate	
		01 hex	= 19.2 Kbaud
		02 hex	= 57.6 Kbaud
		05 hex	= 115,2 Kbaud
mtag	Binary value	Number of MDSes (Multitag/Bulk) that can be processed in the antenna field	= 1 with single-tag mode (param = 0x05, 0x25)
ANT	Binary value	Status of antenna	
		01 hex	= Antenna On
		02 hex	= Antenna Off
ANW	Binary value	Presence mode	
		0	= Operation without presence
		01 hex	= Operation with presence (see ANW-MELD signal)

SLG STATUS (mode 06), UDT280

FZP	Binary value	0 … 255	= Error counter, passive (errors during idle time)
ABZ	Binary value	0 … 255	= Abort counter
CFZ	Binary value	0 … 255	= Code error counter
SFZ	Binary value	0 … 255	= Signature error counter
CRCFZ	Binary value	0 … 255	= CRC error counter
BSTAT	Binary value	0 … 255	= Current command status
ASMFZ	Binary value	0 … 255	= Interface problems to host (ASM/PC) parity, BCC, frame error

Note

All counter values are reset after reading (= SLG STATUS command executed).

Explanations:

- "FZP": Counts interference pulses when communication is not taking place with a transponder. (e.g. EMC interference caused by contactors, motors, etc.). Counter values can also be generated when a tag is located at the edge of the field even when there is no external interference.
- "ABZ", "CFZ", "SFZ" and "CRCFZ" are protocol error counters that can be generated during reader/tag communication. This can be caused by unsuitable reader/tag positioning (e.g. tag on field boundary, several data carriers in the field) or external electromagnetic interference.

To ensure clear diagnosis of the quality of communication, it is recommended that an SLG STATUS command (mode 06) is executed following receipt of the presence command to reset the error counter.

The protocol error counters are not mutually independent. If a code error (CFZ) occurs, this will cause a secondary signature (SFZ) or CRC (CRCFZ) error.

- "BSTAT" is the status for the most recently executed command. A value other than 0 means that the previous command was repeated by the reader due to faults (see above).
- "ASMFZ" signals line-conducted communication interference between the communication module (ASM) and the reader. Faults of this type can be caused by contact problems on the connector or the cable connection.

8.3 Transponder diagnostics with MDS STATUS

The MDS STATUS command can be used to scan the status and diagnostics data of the transponder that is located within the antenna field.

MDS STATUS (mode 01), UDT260

UID	Binary value	0 … 2^{64} -1	= b0-31: 4 byte TAG ID, b32-63: 0
MDS type	Binary value	0x01	= Transponder without FRAM
		0x02	= Transponder with FRAM 8 KB
		0x03	= Transponder with FRAM 32 KB
Lock status	Binary value	0 … 255	= Content of lock-bit register (EEPROM addr. 0xFF18)

MDS STATUS (mode 02), UDT270

LFD	Binary value	0 … 255	= Value for field strength
FZP	Binary value	0 … 255	= Error counter (passive) → errors during idle time
FZA	Binary value	0 … 255	= Error counter (active)
ANWZ	Binary value	0 … 255	= Presence counter

Note

All counter values are reset when the tag exits the field or when the antenna is switched off.

Notes:

- "LFD" is a value for the field strength that is determined in the transponder. The lower the value, the higher the field strength. A setpoint of **< 28 hex** signals reliable data transfer.
- "FZP" counts fault pulses when communication with a transponder is not taking place (e.g. electromagnetic interference caused by contactors, motors, etc.). Counter values can also be generated when a transponder is located at the edge of the field even when there is no external interference.
- "FZA" counts errors that can occur during reader-to-transponder communication. This can be caused by unsuitable reader/transponder positioning (e.g. transponder on field boundary, several data carriers in the field) or external electromagnetic interference.
- "ANWZ" is the value for the time that the transponder remains in the field before the MDS STATUS command (mode 02) is executed. A time step is 10 ms. The maximum time that can be recorded is therefore 2.5 s.

Accessories 9

9.1 RFID Systems Software & Documentation

Version 3.0 and higher of the "RFID Systems Software & Documentation" product is supplied on CD. All the required function blocks and drivers as well as the documentation for the RFID systems are included.

- FC 35: S7 function for the 8xIQ-Sense module
- FB 240: Function block for ASM 450; MOBY on PROFIBUS DP via SIMATIC S5 (including device data file for PROFIBUS DP)
- FB 250: Function block for ASM 400
- FB 41 contains a function block for the ASM 410. The call interface of the FB is virtually identical to FB 250. Please refer to the description of FB 250 for programming instructions.
- FC 44 can be used to operate the ASM 450 in a SIMATIC S7 environment. It is essential to read the instructions in the "Readme" file in the FC 44 directory. The "FC 44 for ASM 450" description is available for operation of the ASM 450.
- FC 45: S7 function for the ASM 754
- Function FC 47 for ASM 470
- FB 47 contains a function block for SIMATIC S5 115U - 155U. It can be used to operate the ASM 470 in a SIMATIC S5 environment via an ET 200M.
- Load program for ES 030 and device data file for connection of the ES 030 to PROFIBUS DP
- Test and demo programs for demonstrating the "read from MDS" and "write to MDS" functions etc. on a PC (Windows). The ASM 424/724 MOBY modules and SIM are connected to the PC by cable to the serial interface of the PC (COM 1 or COM 2).
- 3964R driver for DOS, Windows 95 and Windows NT
- C library for CCT32 for Windows 95/NT 4.0
- C library for MOBY API for Windows 98/NT 4.0
- Latest edition of MOBY documentation in PDF format
- Tools: You will find utility programs for RFID system configuration here.

The "RFID Systems Software & Documentation" CD has a user-friendly interface based on HTML. After Start.exe has been called, a window for selecting the RFID system appears:

- MOBY
- RF300
- RF600

After selecting the RFID system, you can navigate to the required information.

Note

Notes on "RFID system software" and licensing

When purchasing a communication module or an interface module, no software or documentation is supplied. The "RFID Systems Software & Documentation" CD-ROM contains all available FBs/FCs for the SIMATIC, C libraries, demo programs, etc. and needs to be ordered separately. In addition, the CD-ROM contains the complete RFID documentation (German, English and French) in PDF format.

The purchase of a communication module or an interface module includes a payment for the use of the software, including documentation, on the "RFID Systems Software & Documentation" CD-ROM and the purchaser acquires the right to make copies (copy license) insofar as they are required as part of the customer-specific application or development for the plant.

The enclosed contract pertaining to the use of software products against a one-off payment shall apply in addition.

Appendix

A

A.1 Certificates and Approvals

DIN ISO 9001 certificate

The quality assurance system for the entire product process (development, production, and marketing) at Siemens fulfills the requirements of ISO 9001 (corresponds to EN29001: 1987).

This has been certified by DQS (the German society for the certification of quality management systems).

EQ-Net certificate no.: 1323-01

Certifications for the United States, Canada, and Australia

Safety

One of the following markings on a device is indicative of the corresponding approval:	
	Underwriters Laboratories (UL) per UL 60950 (I.T.E) or per UL 508 (IND.CONT.EQ)
C	Underwriters Laboratories (UL) according to Canadian standard C22.2 No. 60950 (I.T.E) or C22.2 No. 142 (IND.CONT.EQ)
C US	Underwriters Laboratories (UL) according to standard UL 60950, Report E11 5352 and Canadian standard C22.2 No. 60950 (I.T.E) or UL508 and C22.2 No. 142 (IND.CONT.EQ)
	UL recognition mark
	Canadian Standard Association (CSA) per Standard C22.2. No. 60950 (LR 81690) or per C22.2 No. 142 (LR 63533)
NRTL	Canadian Standard Association (CSA) per American Standard UL 60950 (LR 81690) or per UL 508 (LR 63533)

EMC

USA	
Federal Communications Commission Radio Frequency Interference Statement	This equipment has been tested and found to comply with the limits for a Class A digital device, pursuant to Part 15 of the FCC Rules. These limits are designed to provide reasonable protection against harmful interference when the equipment is operated in a commercial environment. This equipment generates, uses, and can radiate radio frequency energy and, if not installed and used in accordance with the instruction manual, may cause harmful interference to radio communications. Operation of this equipment in a residential area is likely to cause harmful interference in which case the user will be required to correct the interference at his own expense.
Shielded Cables	Shielded cables must be used with this equipment to maintain compliance with FCC regulations.
Modifications	Changes or modifications not expressly approved by the manufacturer could void the user's authority to operate the equipment.
Conditions of Operations	This device complies with Part 15 of the FCC Rules. Operation is subject to the following two conditions: (1) this device may not cause harmful interference, and (2) this device must accept any interference received, including interference that may cause undesired operation.

CANADA	
Canadian Notice	This Class B digital apparatus complies with Canadian ICES-003.
Avis Canadien	Cet appareil numérique de la classe b est conforme à la norme NMB-003 du Canada.

AUSTRALIA	
	This product meets the requirements of the AS/NZS 3548 Norm.

A.2 Service and support

Technical support

You can reach the technical support team for all A&D projects at

- Telephone: +49 (0) 180 5050 222
- Fax: +49 (0) 180 5050 223

Internet

- Visit our site on the Internet at:

  http://www.siemens.com/automation/service&support

- You can send a support query to:

  http://www.siemens.de/automation/support-request

- You can find the latest general information about our identification systems on the Internet at:
  http://www.siemens.de/simatic-sensors/rf

- The online catalog and the online ordering system is available at:

  http://mall.automation.siemens.com/

A.3 Contacts

If you have any further questions on the use of our products, please contact one of our representatives at your local Siemens office.

The addresses are found on the following pages:

- On the Internet at: http://www.siemens.com/automation/partner
- In catalog CA 01
- In Catalog FS 10 specially for factory automation sensors

A.4 Training

Training center

We offer appropriate courses to get you started. Please contact your regional Training Center, or the central Training Center in D-90327 Nuremberg.

Telephone: +49 (911) 895-3200

http://www.sitrain.com

List of abbreviations

ASM

Interface module

B

Width of a transmission window

CSA

Canadian Standard Association

EMC

Electromagnetic compatibility

FB

Function Block

FC

Function

IEC

International Electrotechnical Commission

L

Length of a transmission window

MDS

Mobile data memory

OTP

One Time Programmable

RFID

Radio Frequency Identification Devices

Sa

Operating distance between MDS and SLG

Sg

Limit distance

SLG

Read/write device

SP

Intersection of the axes of symmetry of the MDS

Tag

See transponder

TPDR

Transponder

UHF

Ultra High Frequency

UID

Unique Identification. A serial number which identifies the transponder uniquely.

UL

Underwriter Laboratories, USA

VDE

Verband Deutscher Elektrotechniker [Association of German Electrical Engineers]

XPDR

Transponder

Glossary

Active surface

Area with minimum field strength containing the transmission window, as well as the areas in which the field strength is no longer sufficient for data exchange.

Automation system (AS)

A programmable logical controller (PLC) of the SIMATIC S7 system, comprising a central controller, a CPU and various I/O modules.

Battery-free data storage unit

Mobile data storage units which operate without batteries. Power is supplied to the data storage unit across an electromagnetic alternating field.

CE marking

Communauté Européenne (product mark of the European Union)

Communication modules

Communication modules are used to integrate the MOBY identification systems in SIMATIC or SINUMERIK systems, or to connect them to PROFIBUS, PC or any other system. Once supplied with the corresponding parameters and data, they handle data communication. They then make the corresponding results and data available. Suitable software blocks (FB/FC for SIMATIC; C libraries for PCs with Windows) ensure easy and fast integration in the application.

Data transmission rate

Unit of measurement for the volume of data transmitted within a unit of time, e.g. bytes/s

Dwell time

The dwell time is the time in which the transponder dwells within the transmission window of a read/write device. The read/write device can exchange data with the transponder during this time.

Dynamic mode

In dynamic mode, the data carrier moves past the read/write device at a traversing rate which depends on the configuration. Various checking mechanisms (listen-in check, CRC, ECC, etc.) ensure error-free data transfer even under extreme environmental conditions. A serial connection (up to 1000 m) is used to connect the read/write device directly to an interface module, PC, or any other system.

Electromagnetic compatibility

Electromagnetic compatibility is the ability of an electrical or electronic device to operate satisfactorily in an electromagnetic environment without affecting or interfering with the environment over and above certain limits.

EMC Directive

Guidelines for electromagnetic compatibility This guideline relates to any electrical or electronic equipment, plant or system containing electric or electronic components.

Equipotential bonding

Potential differences between different parts of a plant can arise due to the different design of the plant components and different voltage levels. It is necessary to compensate for these differences by equipotential bonding: this is done by combining the equipotential bonding conductors of power components and non-power components on a centralized equalizing conductor.

ESD Directive

Directive for handling ESDs.

Frequency hopping

Frequency hopping technique Automatic search for free channels.

In frequency hopping, data packets are transferred between the communication partners on constantly changing carrier frequencies. This makes it possible to react to interference from devices transmitting signals in the same frequency range. If an attempt to send a data packet is unsuccessful, the packet can be transmitted again on a different carrier frequency.

Interface modules (ASM)

See communication modules

IQ-Sense interface

Simple interface on the IQ-Sense module, using a standard design for all types of sensors, enabling integrated data exchange between the sensor and control system.

Limit distance

The limit distance is the maximum clear distance between the upper surface of the read/write device and the transponder, at which the transmission can still function under normal conditions.

Metal-free area

Distance/area which must be maintained between the transponder and metal in order to prevent interference during data transfer between the transponder and read/write device.

Mobile data storage units (MDS)

See transponder

Multi-tag capability

Multi-tag capability means the ability to use several read/write devices which communicate simultaneously with different data carriers.

Programmable logic controller (PLC)

The programmable logical controllers (PLCs) of the SIMATIC S5 systems consist of a central controller, one or more CPUs, and various other modules (e.g. I/O modules).

Read/write devices (SLG)

See readers

Read/write distance

See transmission distance

Readers

Readers ensure fast, secure data transfer between mobile data storage units and higher-level systems (PLCs, PCs, etc.). The data, energy included, are transmitted inductively across an electromagnetic alternating field or by radio. This principle enables contact-free data transmission, ensures high industrial compatibility and works reliably in the presence of contamination or through non-metallic materials.

RFID systems

SIMATIC RF identification systems control and optimize material flow and production sequences. They identify reliably, quickly and economically, use non-contact data communication technology, and store data directly on the product. They are also resistant to contamination.

Secondary fields

The strength of the secondary fields, which exist in addition to the transmission window, is usually lower than that of the transmission window and depends on the metallic environment. Secondary fields should not be used in configuring.

Static mode

In static mode the transponder is positioned at a fixed distance (maximum: limit distance) exactly above the read/write device.

Telegram cycles

The transfer of a read or write command takes place in three cycles, known as message frame cycles. 1 or 2 bytes of user data can be transferred with each command. The acknowledgement transfer (status or read data) takes place in 3 further cycles.

TPDR

Transponder

Transmission distance

Distance between communication module (read/write device) and transponder (mobile data storage unit)

Transmission window

Area in which reliable data exchange between transponder and read/write device is possible due to a particular minimum field strength.

Transponder

An invented word from transmitter and responder. Transponders are used on the product, the product carrier, the object, or its transport or packaging unit, and contain production and manufacturing data, i.e. all application-specific data. They follow the product through assembly lines, transfer and production lines and are used to control material flow.

Because of their wireless design, transponders can be used, if necessary, at individual work locations or manufacturing stations, where their data can be read and updated.

Index

8

8xIQ-Sense module
Addressing, 7-5
Configuration, 7-3
Indicators, 7-2

A

Active surface, 4-6
ANT18 and ANT30 transmission window, 4-4
Application Planning
SIMATIC RF300, 4-1
Approvals, A-1
ASM 452
Configuration, 7-10
Dimensions, 7-16
Indicators, 7-9
Operating mode, 7-11
Ordering data, 7-17
Pin assignments, 7-9
PROFIBUS address and terminating resistor, 7-13
PROFIBUS configuration, 7-11
PROFIBUS Diagnosis, 7-15
Reader connection system, 7-11
Technical data, 7-14
ASM 456
Cable, 7-28
Cable assembly by the customer, 7-29
Cable lengths, 7-28
Configurations, 7-21
Design, 7-20
Dimensional drawing with ECOFAST connection block, 7-33
Features, 7-19
Field of application, 7-18
LED display for PROFIBUS diagnosis, 7-31
Ordering data, 7-34
PROFIBUS hardware configuration, 7-21
Setting PROFIBUS address, 7-22
Status display with LEDs, 7-31
Status LEDs, 7-30
Technical data, 7-32
Wiring ECOFAST connector plugs, 7-25
Wiring M12, 7/8" connector, 7-26
With connection block M12, 7/8, 7-33
ASM 473
Configurations, 7-37
Design and function, 7-35
Dimensions, 7-41
Features, 7-35
Hardware configuration, 7-39
Maximum configuration of an ET 200X, 7-39
Notes on operation, 7-38
Ordering data, 7-42
Pin assignments, 7-36
Reader connection system, 7-39
Technical data, 7-40
ASM 475
Assignment for connecting cable, 7-47
Cable installation, 7-47
Configuration, 7-46
Design and function, 7-43
Function of the LEDs, 7-45
Indicators, 7-45
Ordering data, 7-50
Pin assignment, 7-48
Status display with LEDs, 7-45
Technical data, 7-49
ASM 475 configuration
Centralized configuration, 7-46
Decentralized design, 7-47
ET 200M, 7-46

C

Cabinet configuration, 4-50
Cable
    ASM 456 to reader, 7-28
    Shielding, 4-55
Calculation example, 4-10, 4-14
CD RFIDSystemsSoftware&Communication, 9-1
Certificates, A-1
Communication time
    for fault-free data transfer, 4-9
Configuration, 7-3
Connecting cable
    6GT2891-0Fxxx, 7-28
Connecting the ASM 456 up to protective earth, 7-28
Contacts, A-4
Coupling paths, 4-49

D

Data volume
    Relationship between speed and, 4-19, 4-20, 4-23, 4-26, 4-27
Design
    Centralized, 7-3
    Distributed, 7-3
Diagnostic functions
    SIMATIC RF300, 8-1
Dimension drawing
    Reader RF310R, 5-6, 5-11
Direction of motion
    Transponder, 4-6
Dwell time
    Transponder, 4-8
Dynamic mode, 4-7
Dynamic mode
    Dwell time of the transponder, 4-8

E

Electromagnetic compatibility
    Coupling paths, 4-49
Electromagnetic interference, 4-47
EMC Guidelines, A-3
    Avoiding interference, 4-53
    Basic rules, 4-45
    Cabinet configuration, 4-50
    Cable shielding, 4-55
    Definition, 4-44
    Equipotential bonding, 4-54
    Overview, 4-43
    Propagation of electromagnetic interference, 4-47
Equipotential bonding, 4-54

F

FC 45, 8-1
Features of ASM 452 interface module
    Field of application, 7-8
Field data
    Reader, 4-16
    Reduction due to metal, 4-33, 4-34, 4-35, 4-37
    Transponder, 4-16
Flush-mounting
    of transponders and readers, 4-30
FR300
    MDS STATUS, 8-4

I

Inductive alternating field, 4-2
Installation
    Several readers, 4-31
Installation guidelines, 4-29
Interference sources
    Electromagnetic, 4-48
IQ-Sense interface
    Pin assignment, 7-4

L

LEDs
    For MOBY, 7-36
    for PROFIBUS DP, 7-36

M

MDS STATUS, 8-1
Memory configuration of the RF300 tags, 6-18
Metal-free area
    Reader RF310R, 5-3, 5-8, 5-13
    Transponder RF320T, 6-2
    Transponder RF340T, 6-6, 6-10, 6-14
Minimum distance
    Reader to reader, 4-18
    Transponder to transponder, 4-18

O

Ordering data
    RF310R with IQ-Sense, 5-5

P

PROFIBUS cable
Stripped lengths, 7-41
PROFIBUS Diagnosis
ASM 452, 7-15

R

Read/write distance, 4-2
Reader and ANT1 transmission window, 4-2
Reader RF310R, 5-2, 5-7, 5-12, 5-17
Dimension drawing, 5-6, 5-11
Display elements, 5-2, 5-7, 5-12, 5-17
Features, 5-2, 5-7, 5-12, 5-17
Metal-free area, 5-3, 5-8, 5-13
Minimum distance, 5-3, 5-8
Pin assignment of IQ-Sense interface, 7-4
Readers, 5-1
Mounting, 4-31
Reducing interference due to metal, 4-29
Reduction of field data, 4-33, 4-34, 4-35, 4-37
Resistance to chemicals
Transponder, 4-38
RF300
SLG STATUS, 8-2, 8-3
RFID systems
Overview, 3-1

S

Safety information/instructions, 2-1
Secondary fields, 4-5
Service, A-4
Shielding, 4-55
SIMATIC RF300
Diagnostic functions, 8-1
SLG STATUS, 8-1
Static mode, 4-7
Static mode
Dwell time of the transponder, 4-8
Support, A-4
System components
Overview, 3-4
System overview
RFID systems, 3-1
Systems
RFID, 3-1

T

Technical data
ASM 456, 7-32
ASM 475, 7-49
Transponder RF320T, 6-3, 6-7
Transponder RF340T, 6-7
Transponder RF350T, 6-11, 6-16
Transponder RF360T, 6-16
Time constants, 4-9
Tolerance of pallet side transport, 4-10, 4-14
Tolerance of pallet transport height, 4-10, 4-14
Tracking
Tolerance, 4-5
Tracking tolerances, 4-5
Training center, A-4
Transmission window
Impact of metal, 4-33, 4-37
Width, 4-5
Transponder, 6-1
Active surface, 4-6
Directions of motion, 4-6
Dwell time, 4-8
Mounting on metal, 4-32
Resistance to chemicals, 4-38
Transponder RF320T, 6-4
Features, 6-1
Metal-free area, 6-2
Technical data, 6-3
Transponder RF340T
Features, 6-5, 6-13
Metal-free area, 6-6, 6-10, 6-14
Technical data, 6-7
Transponder RF350T
Features, 6-9
Technical data, 6-11
Transponder RF360T
Technical data, 6-16
Transponder speed, 4-19, 4-20, 4-23, 4-26

U

User data
Calculation of maximum amount of, 4-9

Siemens AG

Automation and Drives
Factory Automation Sensors
Postfach 4848
90327 NUERNBERG
Federal Republic of Germany

www.siemens.com/simatic-sensors