Readers

5

Features of the RF300 reader

The reader provides inductive communication with the transponders and serial connection to the communications modules.

Communication between the transponder and reader takes place over inductive alternating fields.

The transmittable data volume between reader and transponder depends on

- the speed at which the transponder moves through the transmission window of the reader.
- the length of the transmission window,
- the transponder type used (RF300- / ISO 15693- (MDS D)/ ISO 14443 transponder (MDS E)),
- the memory type (FRAM, EEPROM; with RF300 transponders).

ISO 15693 functionality

With all readers of the RF300 family, you can use ISO 15693 transponders. Note that the readers for RF300, ISO 15963 or ISO 14443 operation must have parameters assigned. The parameter assignment done with the aid of the RESET frame (INIT-Run).

For more detailed information on software parameter assignment refer to the manuals.

- Function manual "Ident profile and Ident blocks (https://support.industry.siemens.com/cs/ww/en/view/106368029)",
- Product Information "FB 45 and FC 45 input parameters for RF300 and ISO transponders (https://support.industry.siemens.com/cs/ww/en/view/33315697)",
- Function manual "FB 45 (https://support.industry.siemens.com/cs/ww/en/view/21738808)" as of version "AS ≥ A3".

DRAFT

ISO 14443 functionality

With all readers of the second generation of the RF300 family, you can use ISO 14443 transponders. The RF300 readers of the second generation therefore replace the MOBY E readers SLG 72 and SLG 75. Note that the readers for RF300, ISO 15963 or ISO 14443 operation must have parameters assigned. The parameter assignment done with the aid of the RESET frame (INIT-Run).

The following commands are supported in ISO 14443 operation of the readers:

- READ
- WRITE
- MDS-STATUS (mode 3)
- INIT
- REPEAT

Special ISO 14443 commands such as "INCREMENT", "DECREMENT" or "SET-VALUE" are not supported.

DRAFT

5.1 SIMATIC RF310R

5.1.1 Features

SIMATIC RF310R	Characteristics	
	Design	① RS-422 interface ② Status display
	Area of application	Identification tasks on small assembly lines in harsh industrial environments

5.1.2 RF310R ordering data

Table 5- 1 RF310R ordering data

	Article number
RF310R with RS-422 interface (3964R) horizontal base plate	6GT2801-1AB10
RF310R with RS-422 interface (3964R) base plate turned through 90°	6GT2801-1AB10-0AX1

DRAFT

5.1.3 Pin assignment RF310R with RS-422 interface

Pin	Pin Device end 8-pin M12	Assignment
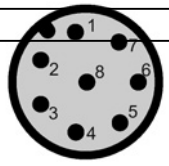	1	+ 24 V
	2	- Transmit
	3	0 V
	4	+ Transmit
	5	+ Receive
	6	- Receive
	7	Unassigned
	8	Earth (shield)

5.1.4 LED operating display

The operational statuses of the reader are displayed by the LEDs. The LED can adopt the colors green, red or yellow and the statuses off

, on

, flashing

:

Table 5- 2 LED operating display on the reader

Color	Meaning
	Operating voltage present, reader not initialized or antenna switched off
	Operating voltage present, reader initialized and antenna switched on
1)	Transponder present
	Error has occurred, the type of flashing corresponds to the error code in the table in the section Error codes. The optical error display is only reset if the corresponding reset parameter ("option_1", see FC 45 / FB 45 documentation, section Input parameters) is set.

1) Only in the "with presence" mode.

5.1.5 Ensuring reliable data exchange

The "center point" of the transponder must be situated within the transmission window.

DRAFT

5.1.6 Metal-free area

The RF310R can be flush-mounted in metal. Please allow for a possible reduction in the field data values.

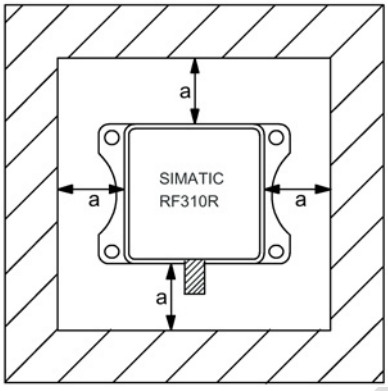

Figure 5-1 Metal-free area for RF310R

To avoid any impact on the field data, the distance a should be ≥ 20 mm.

5.1.7 Minimum distance between RF310R readers

RF310R side by side

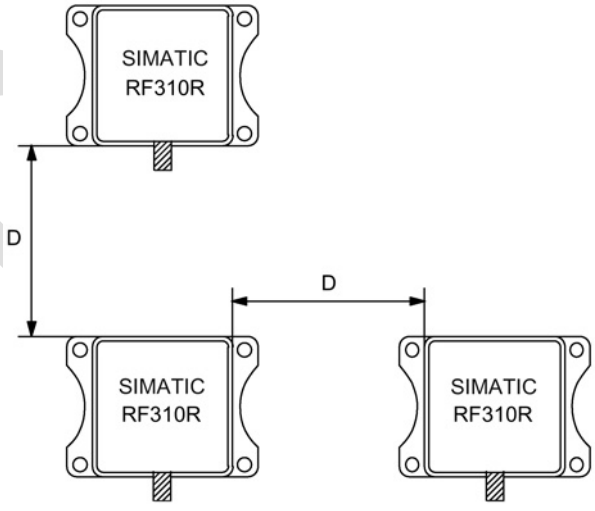

D ≥ 150 mm (with 2 readers)

D ≥ 200 mm (with more than 2 readers)

Figure 5-2 Minimum distance between RF310R readers

DRAFT

RF310R face-of-face

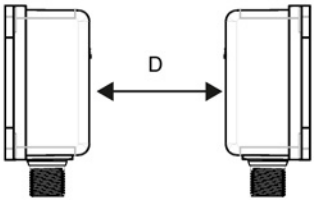

D ≥ 300 mm

Figure 5-3 Face-of-face distance between two RF310Rs

5.1.8 Technical specifications

Table 5- 3 Technical specifications of the RF310R reader with RS-422 interface

		6GT2801-1AB10
Product type designation	SIMATIC RF310R	
Radio frequencies		
Operating frequency, rated value	13.56 MHz	
Electrical data		
Maximum range	60 mm	
Maximum data transmission speed reader ↔ transponder	RF300 transponder	ISO transponder
• Read	• approx. 8000 bytes/s	• approx. 1500 bytes/s
• Write	• approx. 8000 bytes/s	• approx. 1500 bytes/s
Transmission speed	19.2, 57.6, 115.2 kBd	
Read/write distances of the reader	See section "Field data for transponders, readers and antennas (Page 48)."	
MTBF (Mean Time Between Failures)	170 years	
Interfaces		
Electrical connector design	M12, 8-pin	
Standard for interfaces for communication	RS-422	
Antenna	integrated	

DRAFT

	6GT2801-1AB10
Mechanical specifications	
Housing	
• Material	• Plastic PA 12
• Color	• Anthracite
Recommended distance to metal	0 mm
Supply voltage, current consumption, power loss	
Supply voltage	24 VDC
Typical current consumption	50 mA
Permitted ambient conditions	
Ambient temperature	
• During operation	• -25 to +70 °C
• During transportation and storage	• -40 to +85 °C
Degree of protection to EN 60529	IP67
Shock-resistant to EN 60721-3-7, Class 7 M3	50 g
Vibration-resistant to EN 60721-3-7, Class 7 M3	20 g
Torsion and bending load	Not permitted
Design, dimensions and weight	
Dimensions (L x W x H)	75 x 55 x 30 mm
Weight	200 g
Type of mounting	4 x M5 screw; 1.5 Nm
Cable length for RS-422 interface, maximum	1000 m
LED display design	3-color LED
Standards, specifications, approvals	
Proof of suitability	Radio to R&TTE directives EN 300330, EN 301489, CE, FCC, UL/CSA

DRAFT

5.1.9 Approvals

FCC information

Siemens SIMATIC RF310R (MLFB 6GT2801-1AB10); FCC ID NXW-RF310R

This device complies with part 15 of the FCC rules. Operation is subject to the following two conditions:

(1) This device may not cause harmful interference, and

(2) this device must accept any interference received, including interference that may cause undesired operation.

Caution

Any changes or modifications not expressly approved by the party responsible for compliance could void the user's authority to operate the equipment.

Note

This equipment has been tested and found to comply with the limits for a Class A digital device, pursuant to part 15 of the FCC Rules.

These limits are designed to provide reasonable protection against harmful interference when the equipment is operated in a commercial environment. This equipment generates, uses, and can radiate radio frequency energy and, if not installed and used in accordance with the instruction manual, may cause harmful interference to radio communications. Operation of this equipment in a residential area is likely to cause harmful interference in which case the user will be required to correct the interference at his own expense.

IC information

This device complies with Industry Canada licence-exempt RSS standard(s). Operation is subject to the following two conditions:

(1) This device may not cause interference, and

(2) this device must accept any interference, including interference that may cause undesired operation of the device.

Le présent appareil est conforme aux CNR d`Industrie Canada applicables aux appareils radio exempts de licence. L`exploitation est autorisée aux deux conditions suivantes :

(1) L`appareil ne doit pas produire de brouillage, et

(2) l'utilisateur de l`appareil doit accepter tout brouillage radioélectrique subi, même si le brouillage est susceptible d`en compromettre le fonctionnement.

DRAFT

5.1.10 Dimension drawing

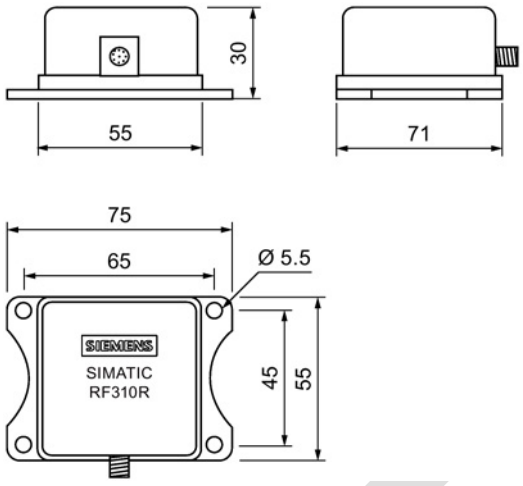

Figure 5-4 Dimension drawing for RF310R

Dimensions in mm

DRAFT

5.2 SIMATIC RF310R with Scanmode

You will find detailed information on the SIMATIC RF310R with Scanmode on the Internet (https://support.industry.siemens.com/cs/ww/en/ps/15034).

5.2.1 Features

SIMATIC RF310R special version Scanmode	Characteristics	
	Design	① RS-422 interface ② Status display
	Area of application	Identification tasks on small assembly lines in harsh industrial environments

5.2.2 Ordering data for RF310R with Scanmode

Table 5- 4 Ordering data RF310R Scanmode

	Article number
RF310R special version Scanmode with RS-422 interface	6GT2801-1AB20-0AX1

DRAFT

5.2.3 Pin assignment RF310R special version Scanmode RS-422 interface

Pin	Pin Device end 8-pin M12	Assignment
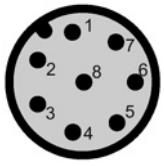	1	+ 24 V
	2	- Transmit
	3	0 V
	4	+ Transmit
	5	+ Receive
	6	- Receive
	7	Unassigned
	8	Earth (shield)

5.2.4 LED operating display

The operational statuses of the reader are displayed by the LEDs. The LED can adopt the colors green, red or yellow and the statuses off , on , flashing :

Table 5- 5 LED operating display on the reader

Color	Meaning
	Operating voltage present, reader ready for operation
	Transponder present
	Red LED for error display is activated permanently if correct operation of the reader cannot be guaranteed (e. g. faulty start, checksum error during operation).

5.2.5 Ensuring reliable data exchange

The "center point" of the transponder must be situated within the transmission window.

DRAFT

5.2.6 Metal-free area

The RF310R special version can be flush-mounted in metal. Please allow for a possible reduction in the field data values.

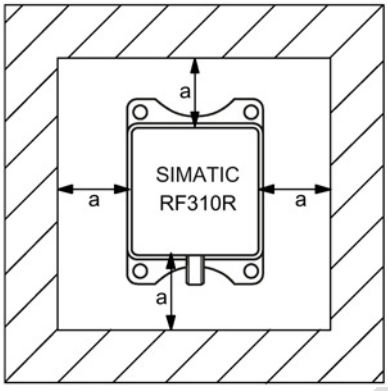

Figure 5-5 Metal-free area for RF310R special version

To avoid any impact on the field data, the distance a should be ≥ 20 mm.

5.2.7 Minimum distance between several readers

RF310R special version side by side

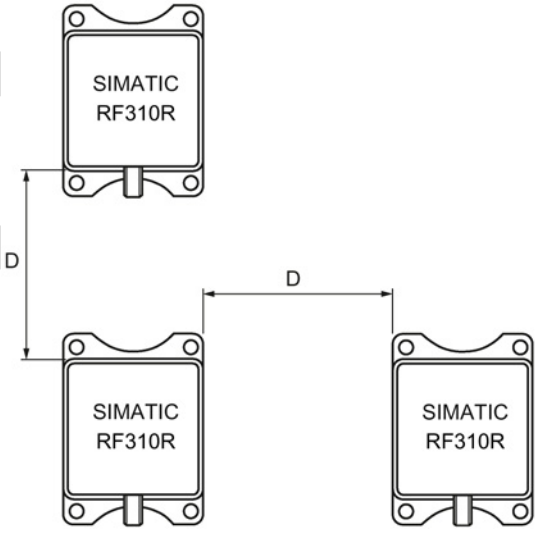

D ≥ 150 mm (with 2 readers)

D ≥ 200 mm (with more than 2 readers)

Figure 5-6 Minimum distance between RF310R readers

RF310R special version face-to-face

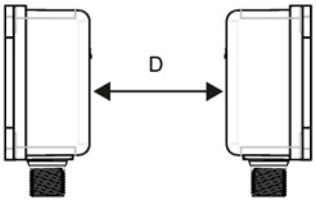

D ≥ 300 mm

Figure 5-7 Face-to-face distance between two RF310R special version

5.2.8 Technical specifications

Table 5- 6 Technical specifications of the RF310R reader with Scanmode

		6GT2801-1AB20-0AX1
Product type designation	SIMATIC RF310R Scanmode	
Radio frequencies		
Operating frequency, rated value	13.56 MHz	
Electrical data		
Maximum range	60 mm	
Maximum data transmission speed reader ↔ transponder	RF300 transponder	ISO transponder
• Read	• approx. 8000 bytes/s	• approx. 1500 bytes/s
Transmission speed	9.6, 19.2, 38.4, 57.6, 115.2 kBd	
Read/write distances of the reader	See section "Field data for transponders, readers and antennas (Page 48)."	
MTBF (Mean Time Between Failures)	170 years	
Interfaces		
Electrical connector design	M12, 8-pin	
Standard for interfaces for communication	RS-422 (Scanmode)	
Antenna	integrated	
Mechanical specifications		
Housing		
• Material	• Plastic PA 12	
• Color	• Anthracite	
Recommended distance to metal	0 mm	

DRAFT

	6GT2801-1AB20-0AX1
Supply voltage, current consumption, power loss	
Supply voltage	24 VDC
Typical current consumption	50 mA
Permitted ambient conditions	
Ambient temperature	
• During operation	• -25 to +70 °C
• During transportation and storage	• -40 to +85 °C
Degree of protection to EN 60529	IP67
Shock-resistant to EN 60721-3-7, Class 7 M3	50 g
Vibration-resistant to EN 60721-3-7, Class 7 M3	20 g
Torsion and bending load	Not permitted
Design, dimensions and weight	
Dimensions (L x W x H)	75 x 55 x 30 mm
Weight	170 g
Type of mounting	4 x M5 screws; 1.5 Nm
Cable length for RS-422 interface, maximum	1000 m
LED display design	3-color LED
Standards, specifications, approvals	
Proof of suitability	Radio to R&TTE directives EN 300330, EN 301489, CE, FCC, UL/CSA

DRAFT

5.2.9 Approvals

FCC information

Siemens SIMATIC RF310R (MLFB 6GT2801-1AB20-0AX1); FCC ID NXW-RF310R

This device complies with part 15 of the FCC rules. Operation is subject to the following two conditions:

(1) This device may not cause harmful interference, and

(2) this device must accept any interference received, including interference that may cause undesired operation.

Caution

Any changes or modifications not expressly approved by the party responsible for compliance could void the user's authority to operate the equipment.

Note

This equipment has been tested and found to comply with the limits for a Class A digital device, pursuant to part 15 of the FCC Rules.

These limits are designed to provide reasonable protection against harmful interference when the equipment is operated in a commercial environment. This equipment generates, uses, and can radiate radio frequency energy and, if not installed and used in accordance with the instruction manual, may cause harmful interference to radio communications. Operation of this equipment in a residential area is likely to cause harmful interference in which case the user will be required to correct the interference at his own expense.

IC information

This device complies with Industry Canada licence-exempt RSS standard(s). Operation is subject to the following two conditions:

(1) This device may not cause interference, and

(2) this device must accept any interference, including interference that may cause undesired operation of the device.

Le présent appareil est conforme aux CNR d`Industrie Canada applicables aux appareils radio exempts de licence. L`exploitation est autorisée aux deux conditions suivantes :

(1) L`appareil ne doit pas produire de brouillage, et

(2) l'utilisateur de l`appareil doit accepter tout brouillage radioélectrique subi, même si le brouillage est susceptible d`en compromettre le fonctionnement.

DRAFT

5.2.10 Dimension drawing

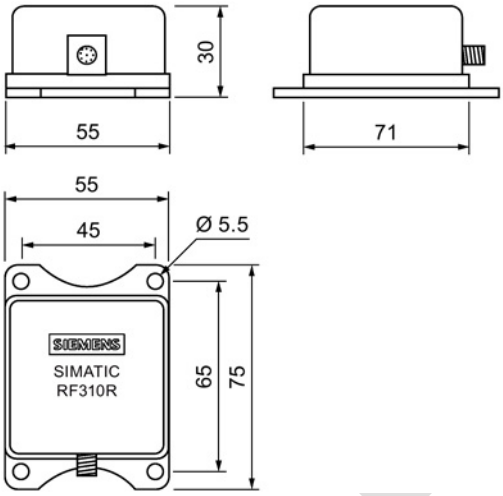

Figure 5-8 Dimension drawing RF310R special version Scanmode

Dimensions in mm

DRAFT

5.3 SIMATIC RF310R - second generation

5.3.1 Features

SIMATIC RF310R	Characteristics	
	Design	① RS-422 interface ② LED operating display
	Area of application	Identification tasks on small assembly lines in harsh industrial environments

5.3.2 Ordering data

Table 5- 7 RF310R ordering data

	Article number
RF310R with RS-422 interface (3964R)	6GT2801-1BA10

DRAFT

5.3.3 Pin assignment of the RS-422 interface

Table 5- 8 Pin assignment

Pin	Pin Device end 8-pin M12	Assignment
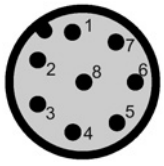	1	+ 24 V
	2	- Transmit
	3	0 V
	4	+ Transmit
	5	+ Receive
	6	- Receive
	7	Unassigned
	8	Earth (shield)

5.3.4 LED operating display

The operational statuses of the reader are displayed by two LEDs. The LEDs can adopt the colors white green, red, yellow or blue and the statuses off, on , flashing:

Table 5- 9 Display elements

LED	Meaning
	The reader is turned off.
	The reader is turned on and is searching for transponders. The reader is in the "Setup" mode, in the "Search for transponders" status and has not yet received a "RESET" command and is not ready.
/	There is transponder in the antenna field. The reader is in the "Setup" mode, in the status "Show quality", has not yet received a "RESET" command and is not ready. Depending on the signal strength, the LED flashes or is lit permanently.
	The reader has received a "RESET" command.
	There is transponder in the antenna field. The reader is ready.
	There is an error. The number of flashes provides information about the current error. You will find more information on error messages in the section "System diagnostics (Page 395)".

5.3.5 Ensuring reliable data exchange

The "center point" of the transponder must be situated within the transmission window.

DRAFT

5.3.6 Metal-free area

The RF310R can be flush-mounted in metal. Allow for a possible reduction in the field data. To avoid any influence on the field data, the distance "a" should be kept to.

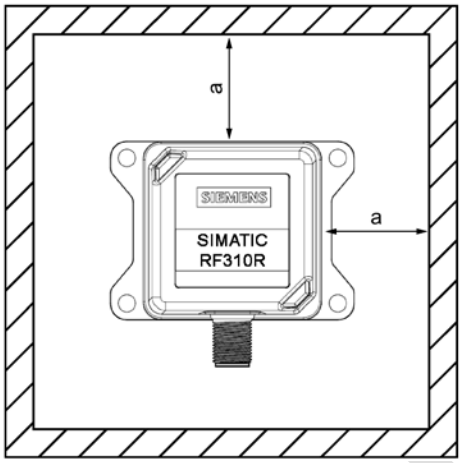

a ≥ 20 mm

Figure 5-9 Metal-free area for RF310R

5.3.7 Minimum distance between RF310R readers

RF310R side by side

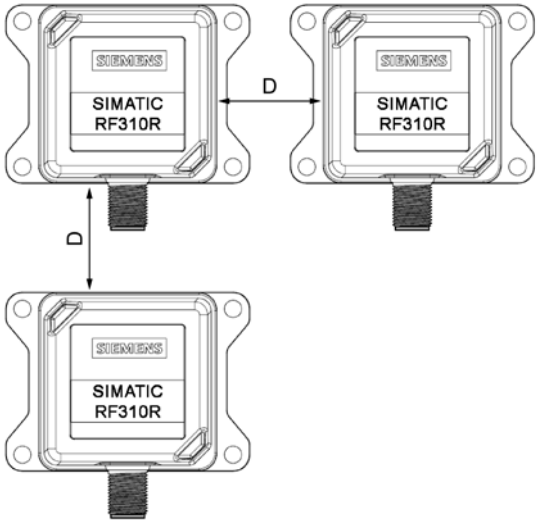

D ≥ 150 mm (with 2 readers)

D ≥ 200 mm (with more than 2 readers)

Figure 5-10 Minimum distance between RF310R readers

DRAFT

RF310R face-of-face

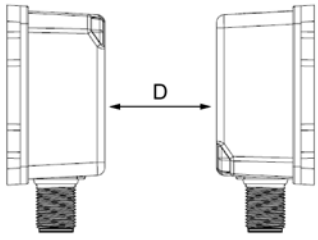

D ≥ 300 mm

Figure 5-11 Face-of-face distance between two RF310Rs

5.3.8 Technical specifications

Table 5- 10 Technical specifications of the RF310R reader with RS-422 interface

	6GT2801-1BA10		
Product type designation	SIMATIC RF310R		
Radio frequencies			
Operating frequency, rated value	13.56 MHz		
Electrical data			
Maximum range	60 mm		
Maximum data transmission speed reader ↔ transponder	RF300 transponder	ISO transponder (MDS D)	ISO transponder (MDS E)
• Read	• ≤ 8000 bytes/s	• ≤ 3300 bytes/s	• ≤ 3400 bytes/s
• Write	• ≤ 8000 bytes/s	• ≤ 1700 bytes/s	• ≤ 800 bytes/s
Transmission speed	19.2, 57.6, 115.2 kBd		
Read/write distances of the reader	See section "Field data for transponders, readers and antennas (Page 48)."		
MTBF (Mean Time Between Failures)	273 years		
Interfaces			
Electrical connector design	M12, 8-pin		
Standard for interfaces for communication	RS-422		
Antenna	integrated		

DRAFT

	6GT2801-1BA10
Mechanical specifications	
Housing	
• Material	• Plastic PA 12
• Color	• TI-Grey
Recommended distance to metal	0 mm
Supply voltage, current consumption, power loss	
Supply voltage	24 VDC
Typical current consumption	55 mA
Permitted ambient conditions	
Ambient temperature	
• During operation	• -25 to +70 °C
• During transportation and storage	• -40 to +85 °C
Degree of protection to EN 60529	IP67
Shock-resistant to EN 60721-3-7, Class 7 M3	50 g
Vibration-resistant to EN 60721-3-7, Class 7 M3	20 g
Torsion and bending load	Not permitted
Design, dimensions and weight	
Dimensions (L x W x H)	75 x 55 x 30 mm
Weight	100 g
Type of mounting	4 x M5 screws; 1.5 Nm
Cable length for RS-422 interface, maximum	1000 m
LED display design	2 LEDs, 5 colors
Standards, specifications, approvals	
Proof of suitability	Radio to R&TTE directives EN 300330, EN 301489, CE, FCC, UL/CSA (IEC61010 / IEC61010-2-201), Ex approval

DRAFT

5.3.9 Approvals

FCC information

Siemens SIMATIC RF310R (MLFB 6GT2801-1BA10); FCC ID NXW-RF310R02

This device complies with part 15 of the FCC rules. Operation is subject to the following two conditions:

(1) This device may not cause harmful interference, and

(2) this device must accept any interference received, including interference that may cause undesired operation.

Caution

Any changes or modifications not expressly approved by the party responsible for compliance could void the user's authority to operate the equipment.

Note

This equipment has been tested and found to comply with the limits for a Class A digital device, pursuant to part 15 of the FCC Rules.

These limits are designed to provide reasonable protection against harmful interference when the equipment is operated in a commercial environment. This equipment generates, uses, and can radiate radio frequency energy and, if not installed and used in accordance with the instruction manual, may cause harmful interference to radio communications. Operation of this equipment in a residential area is likely to cause harmful interference in which case the user will be required to correct the interference at his own expense.

IC information

This device complies with Industry Canada licence-exempt RSS standard(s). Operation is subject to the following two conditions:

(1) This device may not cause interference, and

(2) this device must accept any interference, including interference that may cause undesired operation of the device.

Le présent appareil est conforme aux CNR d`Industrie Canada applicables aux appareils radio exempts de licence. L`exploitation est autorisée aux deux conditions suivantes :

(1) L`appareil ne doit pas produire de brouillage, et

(2) l'utilisateur de l`appareil doit accepter tout brouillage radioélectrique subi, même si le brouillage est susceptible d`en compromettre le fonctionnement.

DRAFT

UL information (IEC61010-1 / IEC61010-2-201)

This standard applies to equipment designed to be safe at least under the following conditions:

- a) indoor use;
- b) altitude up to 2 000 m;
- c) temperature -25 °C to 70 °C;
- d) maximum relative humidity 80 % for temperature up to 31 °C decreasing linearly to 50 % relative humidity at 40 °C;
- e) TRANSIENT OVERVALTAGES up to the levels of OVERVALTAGE CATEGORY II, NOTE 1: These levels of transient overvoltage are typical for equipment supplied from the building wiring.
- f) using a "NEC Class 2" power supply is required

5.3.10 Dimension drawing

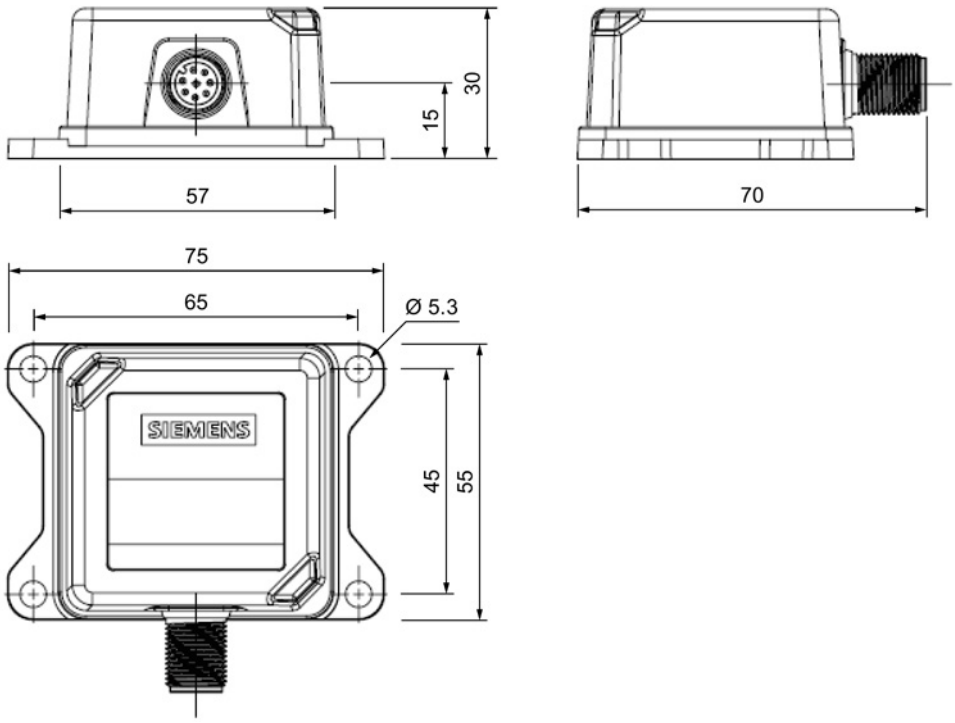

Figure 5-12 Dimension drawing for RF310R

Dimensions in mm

5.4 SIMATIC RF340R/RF350R

5.4.1 SIMATIC RF340R

5.4.1.1 Features

SIMATIC RF340R	Characteristics	
	Design	① RS-422 interface ② Status display
	Area of application	Identification tasks on assembly lines in harsh industrial environments

5.4.1.2 Ordering data for RF340R

Table 5- 11 Ordering data for RF340R

	Article number
RF340R with RS-422 interface (3964R)	6GT2801-2AB10

DRAFT

5.4.1.3 Pin assignment of RF340R RS422 interface

Pin	Pin Device end 8-pin M12	Assignment
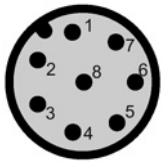	1	+ 24 V
	2	- Transmit
	3	0 V
	4	+ Transmit
	5	+ Receive
	6	- Receive
	7	Unassigned
	8	Earth (shield)

5.4.1.4 LED operating display

The operational statuses of the reader are displayed by the LEDs. The LED can adopt the colors green, red or yellow and the statuses off, on , flashing:

Table 5- 12 LED operating display on the reader

Color	Meaning
	Operating voltage present, reader not initialized or antenna switched off
	Operating voltage present, reader initialized and antenna switched on
1)	Transponder present
	Error has occurred, the type of flashing corresponds to the error code in the table in the section Error codes. The optical error display is only reset if the corresponding reset parameter ("option_1", see FC 45 / FB 45 documentation, section Input parameters) is set.

1) Only in the "with presence" mode.

5.4.1.5 Ensuring reliable data exchange

The "center point" of the transponder must be situated within the transmission window.

DRAFT

5.4.1.6 Metal-free area

The RF340R can be flush-mounted in metal. Please allow for a possible reduction in the field data values.

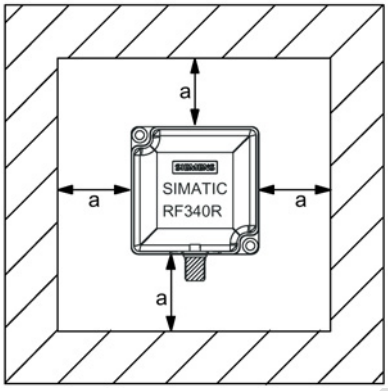

Figure 5-13 Metal-free area for RF340R

To avoid any impact on the field data, the distance a should be ≥ 20 mm.

5.4.1.7 Minimum distance between RF340R readers

RF340R side by side

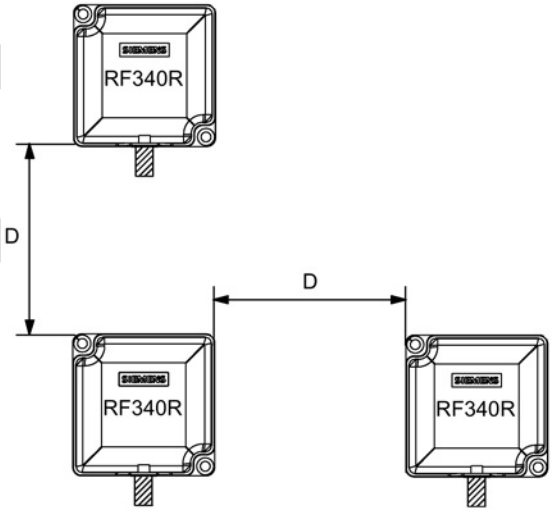

D ≥ 200 mm (with 2 readers)

D ≥ 250 mm (with more than 2 readers)

Figure 5-14 Minimum distance between RF340R readers

RF340R face-of-face

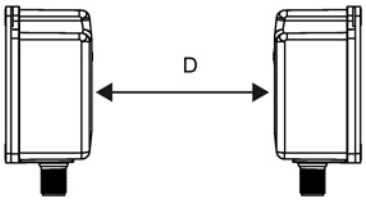

D ≥ 500 mm

Figure 5-15 Face-of-face distance between two RF340Rs

5.4.1.8 Technical specifications

Table 5- 13 Technical specifications of the RF340R reader

		6GT2801-2AB10
Product type designation	SIMATIC RF340R	
Radio frequencies		
Operating frequency, rated value	13.56 MHz	
Electrical data		
Maximum range	140 mm	
Maximum data transmission speed reader ↔ transponder	RF300 transponder	ISO transponder
• Read	• approx. 8000 bytes/s	• approx. 1500 bytes/s
• Write	• approx. 8000 bytes/s	• approx. 1500 bytes/s
Transmission speed	19.2, 57.6, 115.2 kBd	
Read/write distances of the reader	See section "Field data for transponders, readers and antennas (Page 48)."	
MTBF (Mean Time Between Failures)	140 years	
Interfaces		
Electrical connector design	M12, 8-pin	
Standard for interfaces for communication	RS-422 (3964R protocol)	
Antenna	integrated	

DRAFT

	6GT2801-2AB10
Mechanical specifications	
Housing	
• Material	• Plastic PA 12
• Color	• Anthracite
Recommended distance to metal	0 mm
Supply voltage, current consumption, power loss	
Supply voltage	24 VDC
Typical current consumption	100 mA
Permitted ambient conditions	
Ambient temperature	
• During operation	• -25 to +70 °C
• During transportation and storage	• -40 to +85 °C
Degree of protection to EN 60529	IP67
Shock-resistant to EN 60721-3-7, Class 7 M3	50 g
Vibration-resistant to EN 60721-3-7, Class 7 M3	20 g
Torsion and bending load	Not permitted
Design, dimensions and weight	
Dimensions (L x W x H)	75 x 75 x 41 mm
Weight	250 g
Type of mounting	2 x M5 screws; 1.5 Nm
Cable length for RS-422 interface, maximum	1000 m
LED display design	3-color LED
Standards, specifications, approvals	
Proof of suitability	Radio to R&TTE directives EN 300330, EN 301489, CE, FCC, UL/CSA, Ex approval

DRAFT

5.4.1.9 Approvals

FCC information

Siemens SIMATIC RF340R (MLFB 6GT2801-2AA10); FCC ID NXW-RF340R

Siemens SIMATIC RF340R (MLFB 6GT2801-2AB10); FCC ID NXW-RF340R01

This device complies with part 15 of the FCC rules. Operation is subject to the following two conditions:

(1) This device may not cause harmful interference, and

(2) this device must accept any interference received, including interference that may cause undesired operation.

Caution

Any changes or modifications not expressly approved by the party responsible for compliance could void the user's authority to operate the equipment.

Note

This equipment has been tested and found to comply with the limits for a Class A digital device, pursuant to part 15 of the FCC Rules.

These limits are designed to provide reasonable protection against harmful interference when the equipment is operated in a commercial environment. This equipment generates, uses, and can radiate radio frequency energy and, if not installed and used in accordance with the instruction manual, may cause harmful interference to radio communications. Operation of this equipment in a residential area is likely to cause harmful interference in which case the user will be required to correct the interference at his own expense.

IC information

This device complies with Industry Canada licence-exempt RSS standard(s). Operation is subject to the following two conditions:

(1) This device may not cause interference, and

(2) this device must accept any interference, including interference that may cause undesired operation of the device.

Le présent appareil est conforme aux CNR d`Industrie Canada applicables aux appareils radio exempts de licence. L`exploitation est autorisée aux deux conditions suivantes :

(1) L`appareil ne doit pas produire de brouillage, et

(2) l'utilisateur de l`appareil doit accepter tout brouillage radioélectrique subi, même si le brouillage est susceptible d`en compromettre le fonctionnement.

DRAFT

5.4.1.10 Dimension drawing

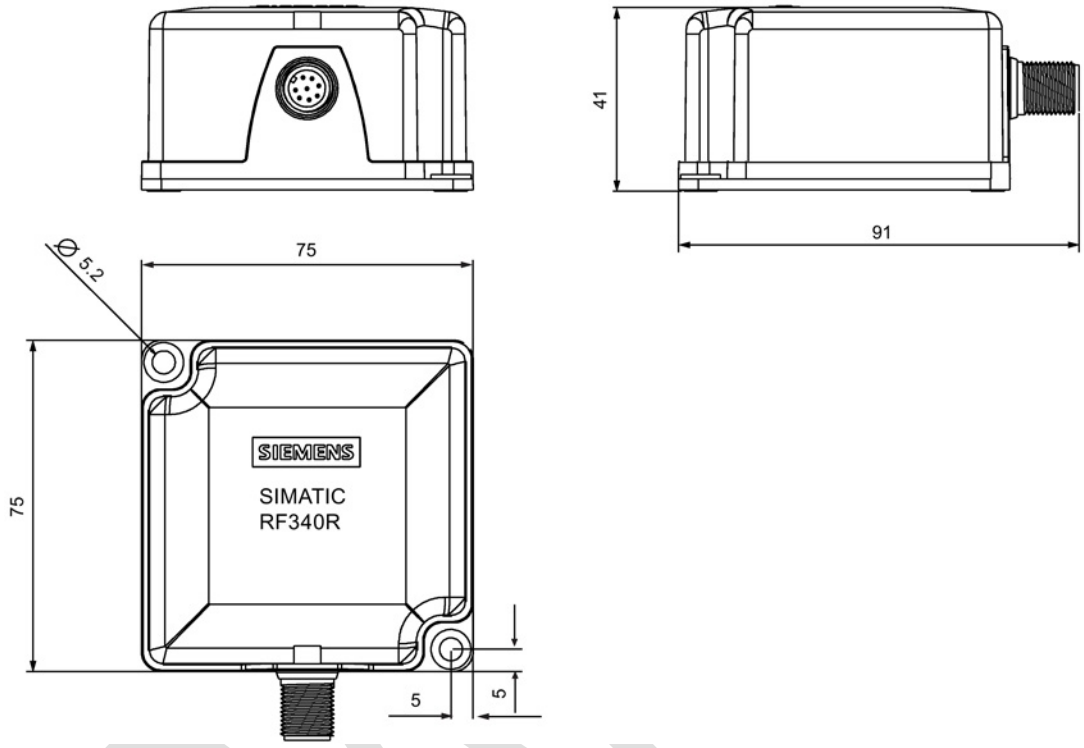

Figure 5-16 Dimension drawing for RF340R

Dimensions in mm

5.4.2 SIMATIC RF350R

5.4.2.1 Features

SIMATIC RF350R	Characteristics	
	Design	① Antenna connection ② RS-422 interface ③ Status display
	Area of application	Identification tasks in assembly lines in harsh industrial environments; for external antennas (ANT 1, ANT 3, ANT 12, ANT 18, ANT 30)

Note

Reader requires external antennas

Note that the RF350R reader is designed only for operation with external antennas and only works in conjunction with the antennas ANT 1, ANT 3, ANT 12, ANT 18 or ANT 30.

5.4.2.2 Ordering data for RF350R

Table 5- 14 Ordering data for RF350R

	Article number
RF350R with RS-422 interface (3964R)	6GT2801-4AB10

DRAFT

5.4.2.3 Pin assignment of RF350R RS422 interface

Pin	Pin Device end 8-pin M12	Assignment
	1	+ 24 V
	2	- Transmit
	3	0 V
	4	+ Transmit
	5	+ Receive
	6	- Receive
	7	Unassigned
	8	Earth (shield)

5.4.2.4 LED operating display

The operational statuses of the reader are displayed by the LEDs. The LED can adopt the colors green, red or yellow and the statuses off, on , flashing:

Table 5- 15 LED operating display on the reader

Color	Meaning
	Operating voltage present, reader not initialized or antenna switched off
	Operating voltage present, reader initialized and antenna switched on
1)	Transponder present
	Error has occurred, the type of flashing corresponds to the error code in the table in the section Error codes. The optical error display is only reset if the corresponding reset parameter ("option_1", see FC 45 / FB 45 documentation, section Input parameters) is set.

1) Only in the "with presence" mode.

5.4.2.5 Ensuring reliable data exchange

The "center point" of the transponder must be situated within the transmission window.

5.4.2.6 Metal-free area

The RF350R reader does not have an internal antenna. Operation is not affected by mounting on metal or flush-mounting in metal. For information about the metal-free area required by the external antennas, refer to the corresponding section of the chapter Auto-Hotspot.

DRAFT

5.4.2.7 Technical specifications

Table 5- 16 Technical specifications of the RF350R reader

		6GT2801-4AB10
Product type designation	SIMATIC RF350R	
Radio frequencies		
Operating frequency, rated value	13.56 MHz	
Electrical data		
Maximum range		
• ANT 1	• 140 mm	
• ANT 3	• 50 mm	
• ANT 12	• 16 mm	
• ANT 18	• 35 mm	
• ANT 30	• 55 mm	
Maximum data transmission speed reader ↔ transponder	RF300 transponder	ISO transponder
• Read	• approx. 8000 bytes/s	• approx. 1500 bytes/s
• Write	• approx. 8000 bytes/s	• approx. 1500 bytes/s
Transmission speed	19.2, 57.6, 115.2 kBd	
Read/write distances of the reader	See section "Field data for transponders, readers and antennas (Page 48)."	
MTBF (Mean Time Between Failures)	140 years	
Interfaces		
Electrical connector design	M12, 8-pin	
Antenna connector design	M8, 4-pin	
Standard for interfaces for communication	RS-422 (3964R protocol)	
Antenna	External, antennas ANT 1, ANT 3, ANT 12, ANT 18 or ANT 30	
Mechanical specifications		
Housing		
• Material	• Plastic PA 12	
• Color	• Anthracite	
Recommended distance to metal	0 mm	

DRAFT

	6GT2801-4AB10
Supply voltage, current consumption, power loss	
Supply voltage	24 VDC
Typical current consumption	100 mA
Permitted ambient conditions	
Ambient temperature	
• During operation	• -25 to +70 °C
• During transportation and storage	• -40 to +85 °C
Degree of protection to EN 60529	IP65
Shock-resistant to EN 60721-3-7, Class 7 M3	50 g
Vibration-resistant to EN 60721-3-7, Class 7 M3	20 g
Torsion and bending load	Not permitted
Design, dimensions and weight	
Dimensions (L x W x H)	75 x 75 x 41 mm
Weight	250 g
Type of mounting	2 x M5 screws; 1.5 Nm
Cable length for RS-422 interface, maximum	1000 m
LED display design	3-color LED
Standards, specifications, approvals	
Proof of suitability	Radio to R&TTE directives EN 300330, EN 301489, CE, FCC, UL/CSA, Ex approval

DRAFT

5.4.2.8 Approvals

FCC information

Siemens SIMATIC RF350R (MLFB 6GT2801-4AA10); FCC ID NXW-RF350R

Siemens SIMATIC RF350R (MLFB 6GT2801-4AB10); FCC ID NXW-RF350R01

This device complies with part 15 of the FCC rules. Operation is subject to the following two conditions:

(1) This device may not cause harmful interference, and

(2) this device must accept any interference received, including interference that may cause undesired operation.

Caution

Any changes or modifications not expressly approved by the party responsible for compliance could void the user's authority to operate the equipment.

Note

This equipment has been tested and found to comply with the limits for a Class A digital device, pursuant to part 15 of the FCC Rules.

These limits are designed to provide reasonable protection against harmful interference when the equipment is operated in a commercial environment. This equipment generates, uses, and can radiate radio frequency energy and, if not installed and used in accordance with the instruction manual, may cause harmful interference to radio communications. Operation of this equipment in a residential area is likely to cause harmful interference in which case the user will be required to correct the interference at his own expense.

IC information

This device complies with Industry Canada licence-exempt RSS standard(s). Operation is subject to the following two conditions:

(1) This device may not cause interference, and

(2) this device must accept any interference, including interference that may cause undesired operation of the device.

Le présent appareil est conforme aux CNR d`Industrie Canada applicables aux appareils radio exempts de licence. L`exploitation est autorisée aux deux conditions suivantes :

(1) L`appareil ne doit pas produire de brouillage, et

(2) l'utilisateur de l`appareil doit accepter tout brouillage radioélectrique subi, même si le brouillage est susceptible d`en compromettre le fonctionnement.

DRAFT

5.4.2.9 Dimension drawing

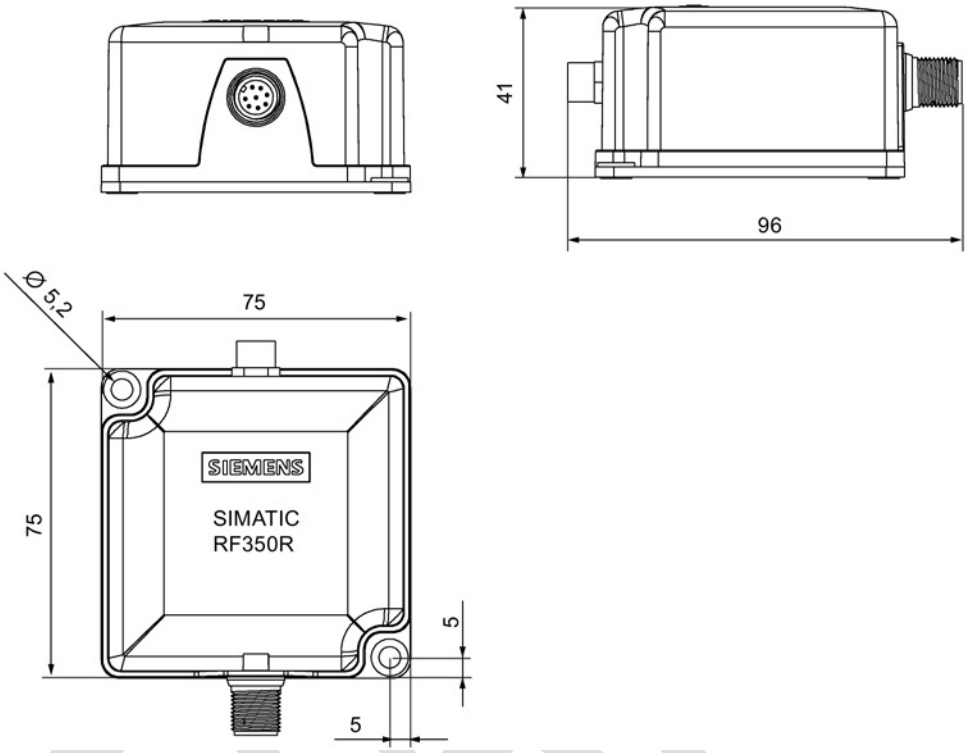

Figure 5-17 RF350R dimension drawing

Dimensions in mm

5.4.3 Use of the reader in hazardous areas

TÜV NORD CERT GmbH as accredited test center and certification body, no. 0044 as per Article 9 of the Directive 94/9/EC of the European Council of 23 March 1994, has confirmed the compliance with the essential health and safety requirements relating to the design and construction of equipment and protective systems intended for use in hazardous areas as per Annex II of the Directive. The essential health and safety requirements are satisfied in accordance with the following standards:

Document	Title
EN 60079-0: 2006	Electrical equipment for hazardous gas atmospheres - Part 0: General requirements
EN 60079-15: 2005	Electrical equipment for hazardous gas atmospheres - Part 15: Design, testing and identification of electrical equipment with type of protection "n"
IEC 61241 -0: 2006	Electrical apparatus for use in the presence of combustible dust - Part 0: General requirements
IEC 61241 -1: 2004	Electrical apparatus for use in the presence of combustible dust - Part 1: Protection through enclosure

⚠ WARNING
EXPLOSION HAZARD DO NOT CONNECT OR DISCONNECT EQUIPMENT WHEN A FLAMMABLE OR COMBUSTIBLE ATMOSPHERE IS PRESENT.

Identification

The identification of the electrical equipment as an enclosed unit is:

II 3 G Ex nA nC IIB T5
II 3 D Ex tD A22 IP6x T80 °C

-25 °C to +70 °C
U_n = 20 to 30 VDC

The equipment also has the following additional markings:

XXXYYYZZZ	[= serial number, is assigned during production]
TÜV 10 ATEX 556039	[= certificate number]

DRAFT

5.4.3.1 Use of the readers in hazardous areas for gases

Temperature class delineation for gases

The temperature class of the reader for hazardous areas depends on the ambient temperature range:

Ambient temperature range	Temperature class
-25 °C to +70 °C	T5

WARNING

Ignitions of gas-air mixtures

When using the RF340R/RF350R readers, check to ensure that the temperature class is observed in respect of the requirements of the area of application.

Non-compliance with the permitted temperature ranges while using the reader can lead to ignitions of gas-air mixtures.

5.4.3.2 Use of the readers in hazardous areas for dusts

The equipment is suitable for dusts whose ignition temperatures for a dust layer of 5 mm are higher than 80 °C (smoldering temperature). With the ignition temperature according to type of protection iD specified here in compliance with IEC 61241-0 and IEC 61241-11, the smoldering temperature of the dust layer is referenced in this case.

Temperature class delineation for dusts

Ambient temperature range	Temperature value
-25 °C < Ta < +70 °C	T80 °C

WARNING

Ignitions of dust-air mixtures

When using the RF340R/RF350R readers, check to ensure that the temperature values are observed in respect of the requirements of the area of application.

Non-compliance with the permitted temperature ranges while using the reader can lead to ignitions of dust-air mixtures.

DRAFT

5.4.3.3 Installation and operating conditions for the hazardous area

NOTICE
Device may be damaged Note the following conditions when installing and operating the device in a hazardous zone to avoid damage: • Making and breaking of circuits is permitted only in a de-energized state. • The maximum surface temperature, corresponding to the marking, applies only for operation without a cover of dust. • The device may only be operated in such a way that adequate protection against UV light is ensured. • The device may not be operated in areas influenced by processes that generate high electrostatic charges. • The equipment must be installed so that it is mechanically protected. • The device sockets must be protected with a shrink-on tube. • The 8 pin connector must be grounded via its supply line. • The device may only be operated with accessories specified or supplied by the manufacturer. All the points above also apply to the accessories (cables and connectors) and to the antennas (exception: the housing of antenna 1 does not need to be installed with impact protection).

DRAFT

5.5 SIMATIC RF340R/RF350R - second generation

5.5.1 SIMATIC RF340R - second generation

5.5.1.1 Features

SIMATIC RF340R	Characteristics	
	Design	① RS-422 interface ② LED operating display
	Area of application	Identification tasks on assembly lines in harsh industrial environments

5.5.1.2 Ordering data

Table 5- 17 Ordering data for RF340R

	Article number
RF340R with RS-422 interface (3964R)	6GT2801-2BA10

DRAFT

5.5.1.3 Pin assignment of the RS-422 interface

Table 5- 18 Pin assignment

Pin	Pin Device end 8-pin M12	Assignment
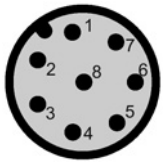	1	+ 24 V
	2	- Transmit
	3	0 V
	4	+ Transmit
	5	+ Receive
	6	- Receive
	7	Unassigned
	8	Earth (shield)

5.5.1.4 LED operating display

The operational statuses of the reader are displayed by two LEDs. The LEDs can adopt the colors white green, red, yellow or blue and the statuses off, on , flashing:

Table 5- 19 Display elements

LED	Meaning
	The reader is turned off.
	The reader is turned on and is searching for transponders. The reader is in the "Setup" mode, in the "Search for transponders" status and has not yet received a "RESET" command and is not ready.
/	There is transponder in the antenna field. The reader is in the "Setup" mode, in the status "Show quality", has not yet received a "RESET" command and is not ready. Depending on the signal strength, the LED flashes or is lit permanently.
	The reader has received a "RESET" command.
	There is transponder in the antenna field. The reader is ready.
	There is an error. The number of flashes provides information about the current error. You will find more information on error messages in the section "System diagnostics (Page 395)".

5.5.1.5 Ensuring reliable data exchange

The "center point" of the transponder must be situated within the transmission window.

DRAFT

5.5.1.6 Metal-free area

The RF340R can be flush-mounted in metal. Allow for a possible reduction in the field data. To avoid any influence on the field data, the distance "a" should be kept to.

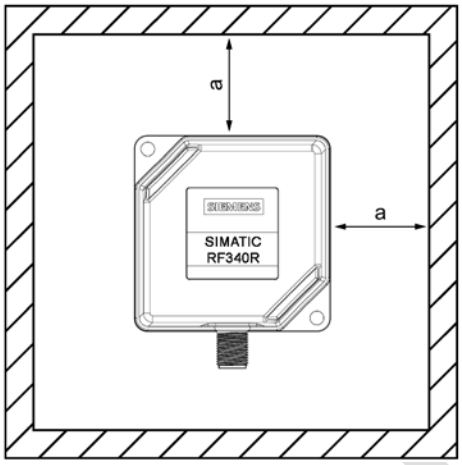

a ≥ 20 mm

Figure 5-18 Metal-free area for RF340R

5.5.1.7 Minimum distance between RF340R readers

RF340R side by side

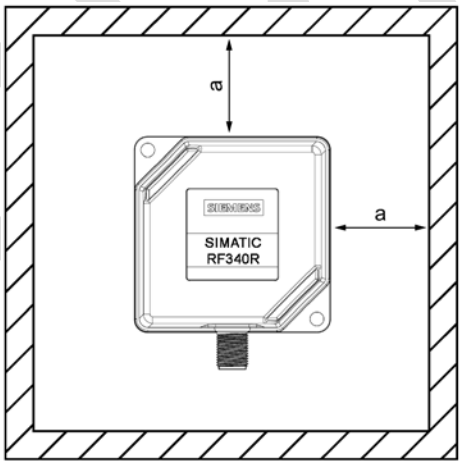

D ≥ 200 mm (with 2 readers)

D ≥ 250 mm (with more than 2 readers)

Figure 5-19 Minimum distance between RF340R readers

DRAFT

RF340R face-of-face

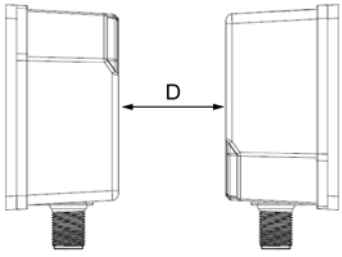

D ≥ 500 mm

Figure 5-20 Face-of-face distance between two RF340Rs

5.5.1.8 Technical specifications

Table 5- 20 Technical specifications of the RF340R reader

	6GT2801-2BA10		
Product type designation	SIMATIC RF340R		
Radio frequencies			
Operating frequency, rated value	13.56 MHz		
Electrical data			
Maximum range	140 mm		
Maximum data transmission speed reader ↔ transponder	RF300 transponder	ISO transponder (MDS D)	ISO transponder (MDS E)
• Read	• ≤ 8000 bytes/s	• ≤ 3300 bytes/s	• ≤ 3400 bytes/s
• Write	• ≤ 8000 bytes/s	• ≤ 1700 bytes/s	• ≤ 800 bytes/s
Transmission speed	19.2, 57.6, 115.2 kBd		
Read/write distances of the reader	See section "Field data for transponders, readers and antennas (Page 48)."		
MTBF (Mean Time Between Failures)	260 years		
Interfaces			
Electrical connector design	M12, 8-pin		
Standard for interfaces for communication	RS-422 (3964R protocol)		
Antenna	integrated		

DRAFT

	6GT2801-2BA10
Mechanical specifications	
Housing	
• Material	• Plastic PA 12
• Color	• TI-Grey
Recommended distance to metal	0 mm
Supply voltage, current consumption, power loss	
Supply voltage	24 VDC
Typical current consumption	55 mA
Permitted ambient conditions	
Ambient temperature	
• During operation	• -25 to +70 °C
• During transportation and storage	• -40 to +85 °C
Degree of protection to EN 60529	IP67
Shock-resistant to EN 60721-3-7, Class 7 M3	50 g
Vibration-resistant to EN 60721-3-7, Class 7 M3	20 g
Torsion and bending load	Not permitted
Design, dimensions and weight	
Dimensions (L x W x H)	75 x 75 x 41 mm
Weight	210 g
Type of mounting	2 x M5 screws; 1.5 Nm
Cable length for RS-422 interface, maximum	1000 m
LED display design	2 LEDs, 5 colors
Standards, specifications, approvals	
Proof of suitability	Radio to R&TTE directives EN 300330, EN 301489, CE, FCC, UL/CSA (IEC61010 / IEC61010-2-201), Ex approval

DRAFT

5.5.1.9 Approvals

FCC information

Siemens SIMATIC RF340R (MLFB 6GT2801-2BA10); FCC ID NXW-RF340R02

This device complies with part 15 of the FCC rules. Operation is subject to the following two conditions:

(1) This device may not cause harmful interference, and

(2) this device must accept any interference received, including interference that may cause undesired operation.

Caution

Any changes or modifications not expressly approved by the party responsible for compliance could void the user's authority to operate the equipment.

Note

This equipment has been tested and found to comply with the limits for a Class A digital device, pursuant to part 15 of the FCC Rules.

These limits are designed to provide reasonable protection against harmful interference when the equipment is operated in a commercial environment. This equipment generates, uses, and can radiate radio frequency energy and, if not installed and used in accordance with the instruction manual, may cause harmful interference to radio communications. Operation of this equipment in a residential area is likely to cause harmful interference in which case the user will be required to correct the interference at his own expense.

IC information

This device complies with Industry Canada licence-exempt RSS standard(s). Operation is subject to the following two conditions:

(1) This device may not cause interference, and

(2) this device must accept any interference, including interference that may cause undesired operation of the device.

Le présent appareil est conforme aux CNR d`Industrie Canada applicables aux appareils radio exempts de licence. L`exploitation est autorisée aux deux conditions suivantes :

(1) L`appareil ne doit pas produire de brouillage, et

(2) l'utilisateur de l`appareil doit accepter tout brouillage radioélectrique subi, même si le brouillage est susceptible d`en compromettre le fonctionnement.

DRAFT

UL information (IEC61010-1 / IEC61010-2-201)

This standard applies to equipment designed to be safe at least under the following conditions:

- a) indoor use;
- b) altitude up to 2 000 m;
- c) temperature -25 °C to 70 °C;
- d) maximum relative humidity 80 % for temperature up to 31 °C decreasing linearly to 50 % relative humidity at 40 °C;
- e) TRANSIENT OVERVALTAGES up to the levels of OVERVALTAGE CATEGORY II, NOTE 1: These levels of transient overvoltage are typical for equipment supplied from the building wiring.
- f) using a "NEC Class 2" power supply is required

5.5.1.10 Dimension drawing

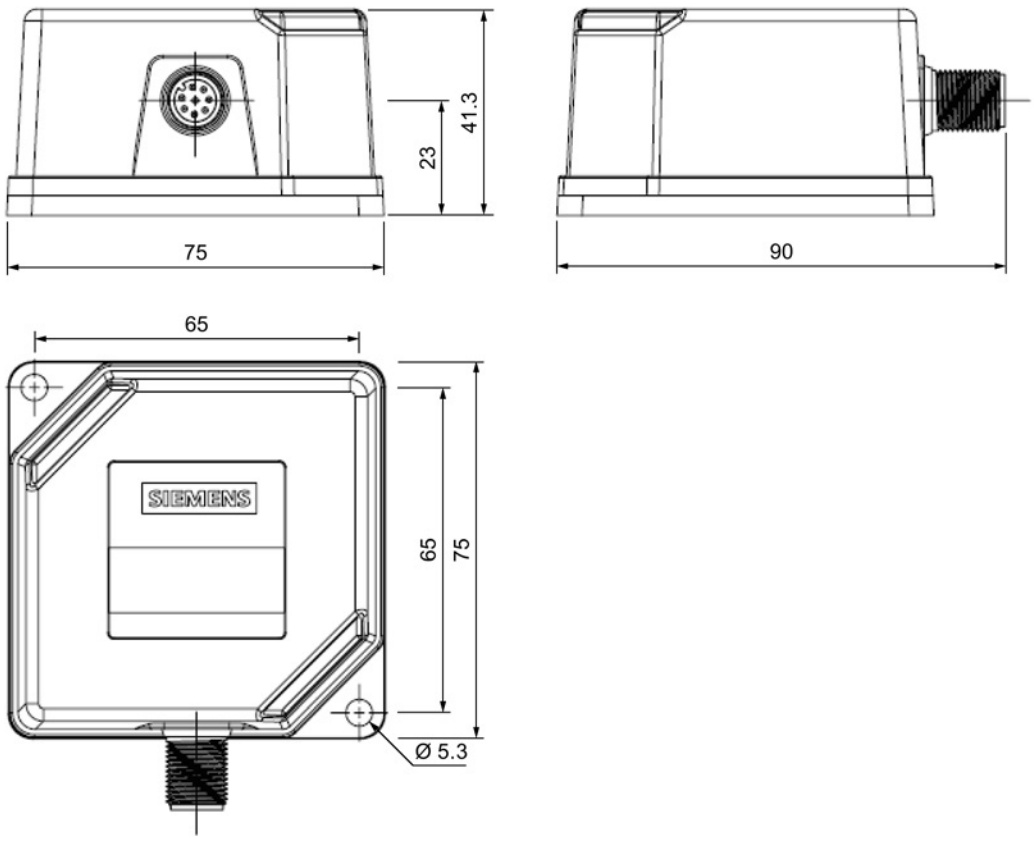

Figure 5-21 Dimension drawing for RF340R

Dimensions in mm

5.5.2 SIMATIC RF350R - second generation

5.5.2.1 Features

SIMATIC RF350R	Characteristics	
	Design	① Antenna connection ② RS-422 interface ③ LED operating display
	Area of application	Identification tasks in assembly lines in harsh industrial environments; for external antennas (ANT 1, ANT 3, ANT 12, ANT 18, ANT 30)

Note

Reader requires external antennas

Note that the RF350R reader is designed only for operation with external antennas and only works in conjunction with the antennas ANT 1, ANT 3, ANT 12, ANT 18 or ANT 30.

5.5.2.2 Ordering data

Table 5- 21 Ordering data for RF350R

	Article number
RF350R with RS-422 interface (3964R)	6GT2801-4BA10

DRAFT

5.5.2.3 Pin assignment of the RS-422 interface

Table 5- 22 Pin assignment

Pin	Pin Device end 8-pin M12	Assignment
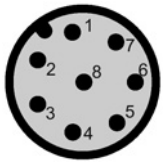	1	+ 24 V
	2	- Transmit
	3	0 V
	4	+ Transmit
	5	+ Receive
	6	- Receive
	7	Unassigned
	8	Earth (shield)

5.5.2.4 LED operating display

The operational statuses of the reader are displayed by two LEDs. The LEDs can adopt the colors white green, red, yellow or blue and the statuses off, on, flashing:

Table 5- 23 Display elements

LED	Meaning
	The reader is turned off.
	The reader is turned on and is searching for transponders. The reader is in the "Setup" mode, in the "Search for transponders" status and has not yet received a "RESET" command and is not ready.
/	There is transponder in the antenna field. The reader is in the "Setup" mode, in the status "Show quality", has not yet received a "RESET" command and is not ready. Depending on the signal strength, the LED flashes or is lit permanently.
	The reader has received a "RESET" command.
	There is transponder in the antenna field. The reader is ready.
	There is an error. The number of flashes provides information about the current error. You will find more information on error messages in the section "System diagnostics (Page 395)".

5.5.2.5 Ensuring reliable data exchange

The "center point" of the transponder must be situated within the transmission window.

DRAFT

5.5.2.6 Metal-free area

The RF350R reader does not have an internal antenna. Operation is not affected by mounting on metal or flush-mounting in metal. For information about the metal-free area required by the external antennas, refer to the corresponding section of the chapter "Antennas (Page 193)".

5.5.2.7 Technical specifications

Table 5- 24 Technical specifications of the RF350R reader

	6GT2801-4BA10		
Product type designation	SIMATIC RF350R		
Radio frequencies			
Operating frequency, rated value	13.56 MHz		
Electrical data			
Maximum range			
• ANT 1	• 140 mm		
• ANT 3	• 50 mm		
• ANT 12	• 16 mm		
• ANT 18	• 35 mm		
• ANT 30	• 55 mm		
Maximum data transmission speed reader ↔ transponder	RF300 transponder	ISO transponder (MDS D)	ISO transponder (MDS E)
• Read	• ≤ 8000 bytes/s	• ≤ 3300 bytes/s	• ≤ 3400 bytes/s
• Write	• ≤ 8000 bytes/s	• ≤ 1700 bytes/s	• ≤ 800 bytes/s
Transmission speed	19.2, 57.6, 115.2 kBd		
Read/write distances of the reader	See section "Field data for transponders, readers and antennas (Page 48)."		
MTBF (Mean Time Between Failures)	260 years		
Interfaces			
Electrical connector design	M12, 8-pin		
Antenna connector design	M8, 4-pin		
Standard for interfaces for communication	RS-422 (3964R protocol)		
Antenna	External, antennas ANT 1, ANT 3, ANT 12, ANT 18 or ANT 30		

DRAFT

	6GT2801-4BA10
Mechanical specifications	
Housing	
• Material	• Plastic PA 12
• Color	• TI-Grey
Recommended distance to metal	0 mm
Supply voltage, current consumption, power loss	
Supply voltage	24 VDC
Typical current consumption	55 mA
Permitted ambient conditions	
Ambient temperature	
• During operation	• -25 to +70 °C
• During transportation and storage	• -40 to +85 °C
Degree of protection to EN 60529	IP65
Shock-resistant to EN 60721-3-7, Class 7 M3	50 g
Vibration-resistant to EN 60721-3-7, Class 7 M3	20 g
Torsion and bending load	Not permitted
Design, dimensions and weight	
Dimensions (L x W x H)	75 x 75 x 41 mm
Weight	250 g
Type of mounting	2 x M5 screws; 1.5 Nm
Cable length for RS-422 interface, maximum	1000 m
LED display design	2 LEDs, 5 colors
Standards, specifications, approvals	
Proof of suitability	Radio to R&TTE directives EN 300330, EN 301489, CE, FCC, UL/CSA (IEC61010 / IEC61010-2-201), Ex approval

DRAFT

5.5.2.8 Approvals

FCC information

Siemens SIMATIC RF350R (MLFB 6GT2801-4BA10); FCC ID NXW-RF350R02

This device complies with part 15 of the FCC rules. Operation is subject to the following two conditions:

(1) This device may not cause harmful interference, and

(2) this device must accept any interference received, including interference that may cause undesired operation.

Caution

Any changes or modifications not expressly approved by the party responsible for compliance could void the user's authority to operate the equipment.

Note

This equipment has been tested and found to comply with the limits for a Class A digital device, pursuant to part 15 of the FCC Rules.

These limits are designed to provide reasonable protection against harmful interference when the equipment is operated in a commercial environment. This equipment generates, uses, and can radiate radio frequency energy and, if not installed and used in accordance with the instruction manual, may cause harmful interference to radio communications. Operation of this equipment in a residential area is likely to cause harmful interference in which case the user will be required to correct the interference at his own expense.

IC information

This device complies with Industry Canada licence-exempt RSS standard(s). Operation is subject to the following two conditions:

(1) This device may not cause interference, and

(2) this device must accept any interference, including interference that may cause undesired operation of the device.

Le présent appareil est conforme aux CNR d`Industrie Canada applicables aux appareils radio exempts de licence. L`exploitation est autorisée aux deux conditions suivantes :

(1) L`appareil ne doit pas produire de brouillage, et

(2) l'utilisateur de l`appareil doit accepter tout brouillage radioélectrique subi, même si le brouillage est susceptible d`en compromettre le fonctionnement.

DRAFT

UL information (IEC61010-1 / IEC61010-2-201)

This standard applies to equipment designed to be safe at least under the following conditions:

- a) indoor use;
- b) altitude up to 2 000 m;
- c) temperature -25 °C to 70 °C;
- d) maximum relative humidity 80 % for temperature up to 31 °C decreasing linearly to 50 % relative humidity at 40 °C;
- e) TRANSIENT OVERVALTAGES up to the levels of OVERVALTAGE CATEGORY II, NOTE 1: These levels of transient overvoltage are typical for equipment supplied from the building wiring.
- f) using a "NEC Class 2" power supply is required

5.5.2.9 Dimension drawing

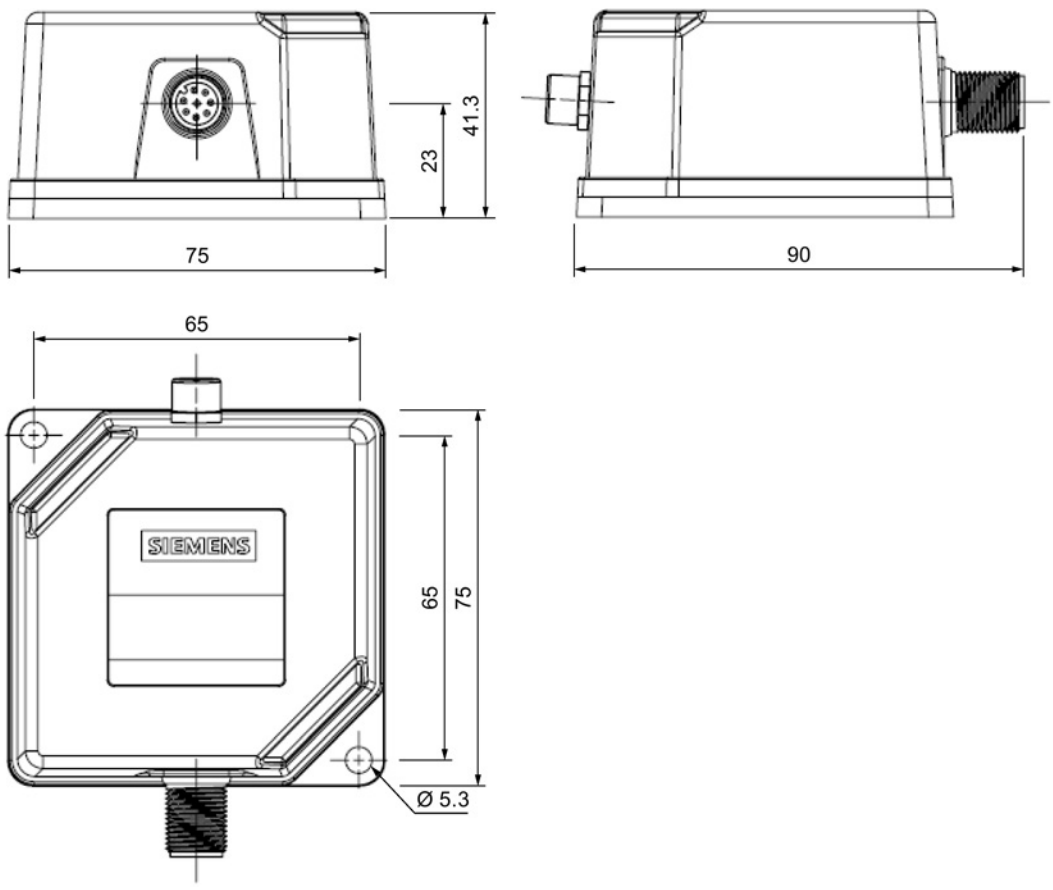

Figure 5-22 RF350R dimension drawing

Dimensions in mm

5.5.3 Use of the reader in hazardous areas

NOTICE
Approvals for the hazardous area The approvals for the hazardous area of the readers SIMATIC RF340R und RF350R are currently in preparation.

DRAFT

5.6 SIMATIC RF380R

5.6.1 Features

SIMATIC RF380R	Characteristics	
	Design	① RS-232 or RS-422 interface ② Status display
	Area of application	Identification tasks on assembly lines in harsh industrial environments

5.6.2 RF380R ordering data

Table 5- 25 RF380R ordering data

	Article number
RF380R with RS-232/RS-422 interface (3964R)	6GT2801-3AB10

5.6.3 Pin assignment of RF380R RS-232/RS-422 interface

You can connect the RF380R reader to a higher-level system via the internal RS-422 interface or via the RS-232 interface. After connection, the interface module automatically detects which interface has been used.

DRAFT

Note correct assignment of the pins here:

Pin	Pin Device end 8-pin M12	Assignment	
		RS-232	RS-422
	1	+ 24 V	+ 24 V
	2	RXD	- Transmit
	3	0 V	0 V
	4	TXD	+ Transmit
	5	not used	+ Receive
	6	not used	- Receive
	7	not used	not used
	8	Ground (shield)	Ground (shield)

5.6.4 LED operating display

The operational statuses of the reader are displayed by the LEDs. The LED can adopt the colors green, red or yellow and the statuses off , on , flashing:

Table 5- 26 LED operating display on the reader

Color	Meaning
	Operating voltage present, reader not initialized or antenna switched off
	Operating voltage present, reader initialized and antenna switched on
1)	Transponder present
	Error has occurred, the type of flashing corresponds to the error code in the table in the section Error codes. The optical error display is only reset if the corresponding reset parameter ("option_1", see FC 45 / FB 45 documentation, section Input parameters) is set.

1) Only in the "with presence" mode.

5.6.5 Ensuring reliable data exchange

The "center point" of the transponder must be situated within the transmission window.

DRAFT

5.6.6 Metal-free area

The RF380R can be flush-mounted in metal. Please allow for a possible reduction in the field data values.

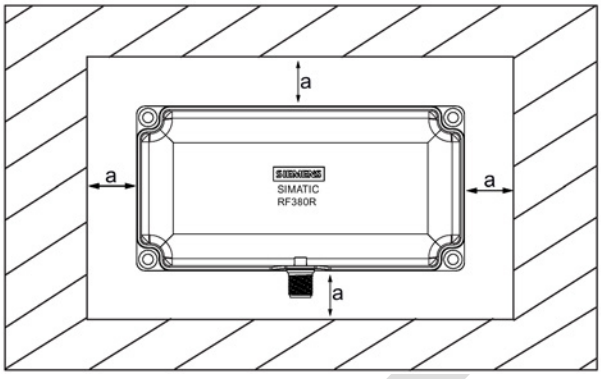

Figure 5-23 Metal-free area for RF380R

To avoid any impact on the field data, the distance a should be ≥ 20 mm.

5.6.7 Minimum distance between RF380R readers

RF380R side by side

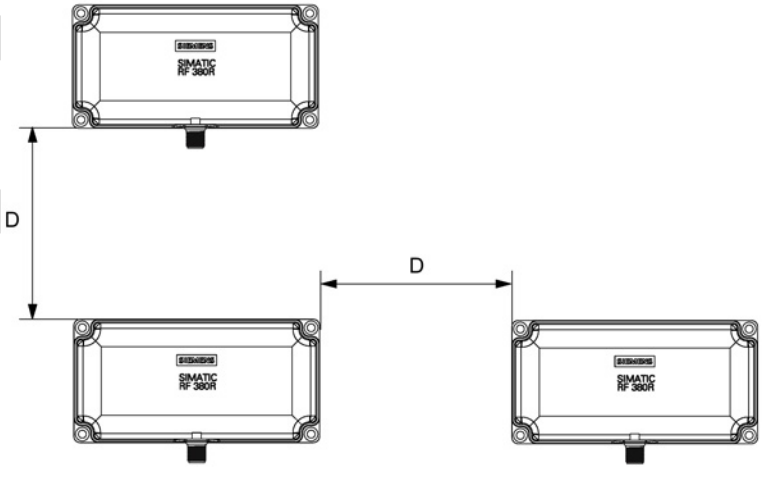

D ≥ 400 mm (with 2 readers)

D ≥ 500 mm (with more than 2 readers)

Figure 5-24 Minimum distance between RF380R readers

RF380R face-to-face

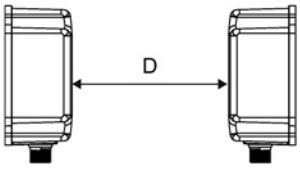

D ≥ 800 mm

Figure 5-25 Face-to-face distance between two RF380R

5.6.8 Technical specifications

Table 5- 27 Technical specifications of the RF380R reader

		6GT2801-3AB10
Product type designation	SIMATIC RF380R	
Radio frequencies		
Operating frequency, rated value	13.56 MHz	
Electrical data		
Maximum range	200 mm	
Maximum data transmission speed reader ↔ transponder	RF300 transponder	ISO transponder
• Read	• approx. 8000 bytes/s	• approx. 1500 bytes/s
• Write	• approx. 8000 bytes/s	• approx. 1500 bytes/s
Transmission speed	19.2, 57.6, 115.2 kBd	
Read/write distances of the reader	See section "Field data for transponders, readers and antennas (Page 48)."	
MTBF (Mean Time Between Failures)	109 years	
Interfaces		
Electrical connector design	M12, 8-pin	
Standard for interfaces for communication	RS-232/RS-422 (3964R protocol)	
Antenna	integrated	

DRAFT

	6GT2801-3AB10	
Mechanical specifications		
Housing		
• Material	• Plastic PA 12	
• Color	• Anthracite	
Recommended distance to metal	0 mm	
Supply voltage, current consumption, power loss		
Supply voltage	24 VDC	
Typical current consumption	160 mA	
Permitted ambient conditions		
Ambient temperature		
• During operation	• -25 to +70 °C	
• During transportation and storage	• -40 to +85 °C	
Degree of protection to EN 60529	IP67	
Shock-resistant to EN 60721-3-7, Class 7 M3	50 g	
Vibration-resistant to EN 60721-3-7, Class 7 M3	20 g	
Torsion and bending load	Not permitted	
Design, dimensions and weight		
Dimensions (L x W x H)	160 x 80 x 41 mm	
Weight	600 g	
Type of mounting	4 x M5 screws; 1.5 Nm	
Cable length for RS-422 interface, maximum	RS-422	RS-232
	1000 m	30 m
LED display design	3-color LED	
Standards, specifications, approvals		
Proof of suitability	Radio in accordance with R&TTE directives EN 300330, EN 301489, CE, FCC, UL/CSA, Ex: II 3G Ex nC IIB T5	

DRAFT

5.6.9 Approvals

FCC information

Siemens SIMATIC RF380R (MLFB 6GT2801-3AA10); FCC ID NXW-RF380R

Siemens SIMATIC RF380R (MLFB 6GT2801-3AB10); FCC ID NXW-RF380R01

This device complies with part 15 of the FCC rules. Operation is subject to the following two conditions:

(1) This device may not cause harmful interference, and

(2) this device must accept any interference received, including interference that may cause undesired operation.

Caution

Any changes or modifications not expressly approved by the party responsible for compliance could void the user's authority to operate the equipment.

Note

This equipment has been tested and found to comply with the limits for a Class A digital device, pursuant to part 15 of the FCC Rules.

These limits are designed to provide reasonable protection against harmful interference when the equipment is operated in a commercial environment. This equipment generates, uses, and can radiate radio frequency energy and, if not installed and used in accordance with the instruction manual, may cause harmful interference to radio communications. Operation of this equipment in a residential area is likely to cause harmful interference in which case the user will be required to correct the interference at his own expense.

IC information

This device complies with Industry Canada licence-exempt RSS standard(s). Operation is subject to the following two conditions:

(1) This device may not cause interference, and

(2) this device must accept any interference, including interference that may cause undesired operation of the device.

Le présent appareil est conforme aux CNR d`Industrie Canada applicables aux appareils radio exempts de licence. L`exploitation est autorisée aux deux conditions suivantes :

(1) L`appareil ne doit pas produire de brouillage, et

(2) l'utilisateur de l`appareil doit accepter tout brouillage radioélectrique subi, même si le brouillage est susceptible d`en compromettre le fonctionnement.

DRAFT

5.6.10 Use of the reader in hazardous areas

The TÜV SÜD Automotive GmbH as approved test center as well as the TÜV SÜD Product Service GmbH as certification center, identification number 0123, as per Article 9 of the Directive of the European Council of 23 March 1994 (94/9/EC), has confirmed the compliance with the essential health and safety requirements relating to the design and construction of equipment and protective systems intended for use in hazardous areas as per Annex II of the Directive. The essential health and safety requirements are satisfied in accordance with the following standards:

Document	Title
EN 60079-0: 2006	Electrical equipment for hazardous gas atmospheres - Part 0: General requirements
EN 60079-15: 2005	Electrical equipment for hazardous gas atmospheres - Part 15: Design, testing and identification of electrical equipment with type of protection "n"
DIN VDE 0848-5: 2001 (in parts)	Safety in electrical, magnetic and electromagnetic fields - Part 5: Explosion protection
ZLS SK 107.1	Central office of the states for safety; test components

Identification

The identification of the electrical equipment as an enclosed unit is:

II 3G Ex nC IIB T5

-25 °C to +70 °C
Um=30Vdc

The equipment is assigned the following references:

XXXYYYZZZ [= serial number, is assigned during production]
TPS 09 ATEX 1 459 X [= certificate number]

"No use of the equipment in the vicinity of processes generating high charges"

"Do not disconnect plug on load"

DRAFT

5.6.11 Use of the reader in hazardous areas for gases

Temperature class delineation for gases

The temperature class of the reader for hazardous areas depends on the ambient temperature range:

Ambient temperature range	Temperature class
-25 °C to +70 °C	T5

WARNING

Ignitions of gas-air mixtures

When using the RF380R reader, check to ensure that the temperature class is observed in respect of the requirements of the area of application

Non-compliance with the permitted temperature ranges while using the reader can lead to ignitions of gas-air mixtures.

5.6.12 Installation and operating conditions for the hazardous area

a) The connector on the RF380R must be grounded via its supply line.

b) Use of the equipment in the vicinity of processes generating high charges is not allowed.

c) The plug of the RF380R must not be disconnected in a hazardous atmosphere or under load.

d) The supply line for the RF380R is not part of this certificate. The supply line must exhibit a sufficient temperature resistance.

e) The equipment must be mechanically protected when installed.

DRAFT

5.6.13 Dimension drawing

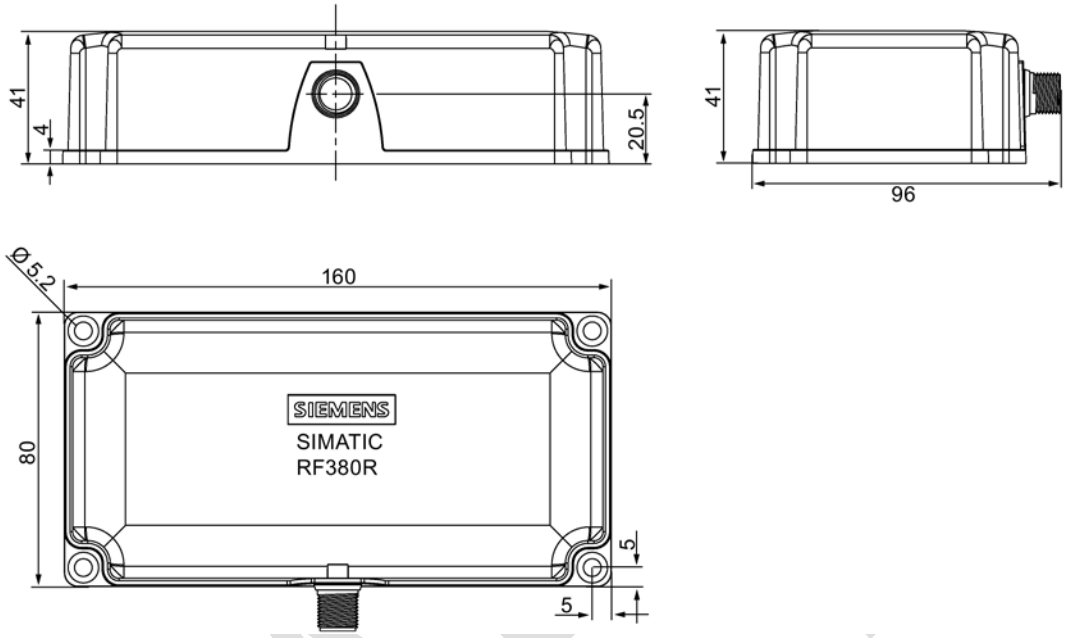

Figure 5-26 Dimension drawing RF380R

Dimensions in mm

DRAFT

5.7 SIMATIC RF380R with Scanmode

You will find detailed information on the SIMATIC RF382R with Scanmode on the Industry Online Support - SIMATIC RF380R with Scanmode (https://support.industry.siemens.com/cs/ww/en/ps/15037).

5.7.1 Features

RF380R Scanmode	Characteristics	
	Design	① RS232 or RS422 interface ② Status display
	Field of application	Identification tasks on assembly lines in harsh industrial environments

5.7.2 Ordering data for RF380R with Scanmode

Table 5- 28 Ordering data RF380R Scanmode

Product	Article number
RF380R Scanmode	6GT2801-3AB20-0AX1

DRAFT

5.7.3 Pin assignment RF380R Scanmode RS-232 interface

You can connect the RF380R Scanmode reader via the internal RS-232/RS-422 interface to a higher-level system. (See section "Basic rules (Page 101)") Make sure that the pin assignment is correct. In the factory settings, the reader is set to RS-232. Siemens can change the interface to RS-422.

Table 5- 29 Connector and reader pin assignment

Pin	Pin Device end 8-pin M12	Assignment	
		RS-232	RS-422
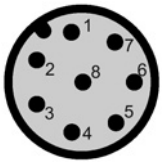	1	+ 24 V	+ 24 V
	2	RXD	- Transmit
	3	0 V	0 V
	4	TXD	+ Transmit
	5	not used	+ Receive
	6	not used	- Receive
	7	not used	not used
	8	Ground (shield)	Ground (shield)

5.7.4 LED operating display

The operational statuses of the reader are displayed by the LEDs. The LED can adopt the colors green, red or yellow and the statuses off, on , flashing:

Table 5- 30 LED operating display on the reader

Color	Meaning
	Operating voltage present, reader ready for operation
	Transponder present
	Red LED for error display is activated permanently if correct operation of the reader cannot be guaranteed (e. g. faulty start, checksum error during operation).

5.7.5 Ensuring reliable data exchange

The "center point" of the transponder must be situated within the transmission window.

DRAFT

5.7.6 Metal-free area

The RF380R can be flush-mounted in metal. Please allow for a possible reduction in the field data values.

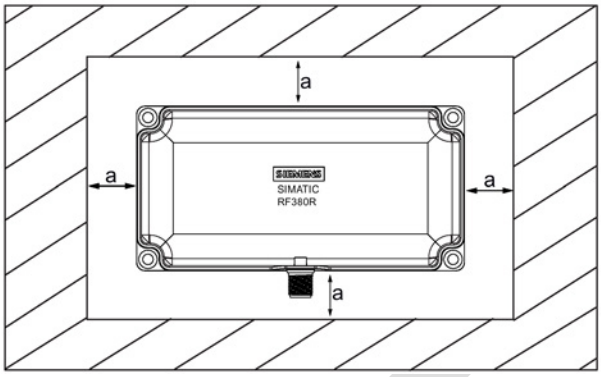

Figure 5-27 Metal-free area for RF380R

To avoid any impact on the field data, the distance a should be ≥ 20 mm.

5.7.7 Minimum distance between several RF380R Scanmode readers

RF380R side by side

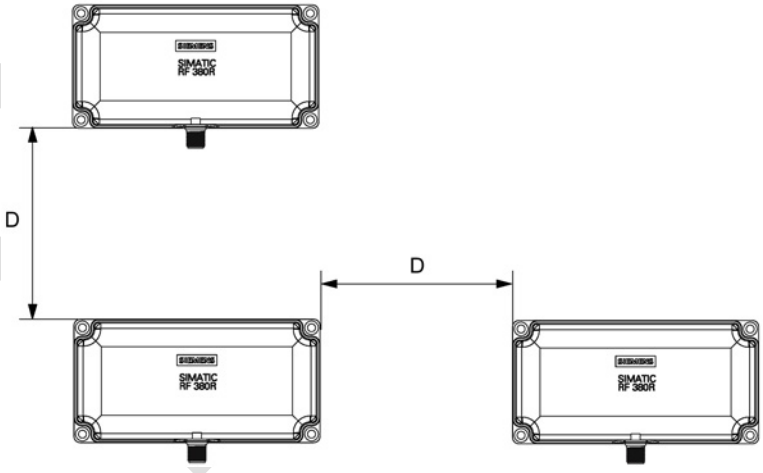

D ≥ 400 mm (with 2 readers)

D ≥ 500 mm (with more than 2 readers)

Figure 5-28 Minimum distance between RF380R readers

RF380R face-to-face

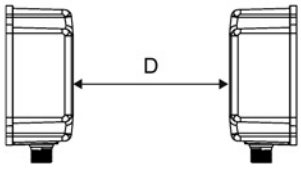

D ≥ 800 mm

Figure 5-29 Face-to-face distance between two RF380R

5.7.8 Technical specifications

Table 5- 31 Technical specifications of the RF380R Scanmode reader

		6GT2801-3AB20-0AX1
Product type designation	SIMATIC RF380R Scanmode	
Radio frequencies		
Operating frequency, rated value	13.56 MHz	
Electrical data		
Maximum range	200 mm	
Maximum data transmission speed reader ↔ transponder	RF300 transponder	ISO transponder
• Read	approx. 8000 bytes/s	approx. 1500 bytes/s
Transmission speed	9.6, 19.2, 38.4, 57, 115.2 kBd	
Read distances of the reader	see section "Field data for transponders, readers and antennas (Page 48)"	
MTBF (Mean Time Between Failures)	109 years	
Interfaces		
Electrical connector design	M12, 8-pin	
Standard for interfaces for communication	RS-232 / RS-422	
Antenna	integrated	
Mechanical specifications		
Enclosure		
• Material	• Plastic PA 12	
• Color	• Anthracite	
Recommended distance to metal	0 mm	

DRAFT

	6GT2801-3AB20-0AX1	
Supply voltage, current consumption, power loss		
Supply voltage	24 VDC	
Typical current consumption	160 mA	
Permitted environmental conditions		
Ambient temperature		
• During operation	-25 to +70 °C	
• Transport and storage	-40 to +85 °C	
Degree of protection to EN 60529	IP67	
Shock-resistant to EN 60721-3-7, Class 7 M3	50 g	
Vibration-resistant to EN 60721-3-7, Class 7 M3	20 g	
Torsion and bending load	Not permitted	
Design, dimensions and weights		
Dimensions (L x W x H)	160 x 80 x 41 (without M12 device connector)	
Weight	Approx. 600 g	
Type of mounting	4 x M5 screws; 1.5 Nm	
Cable length for RS-422 interface, maximum	RS-422	RS-232
	1000 m	30 m
LED display design	3-color LED	
Standards, specifications, approvals		
Proof of suitability	Radio to R&TTE directives EN 300330, EN 301489, CE, FCC, UL/CSA	

DRAFT

5.7.9 Approvals

FCC information

Siemens SIMATIC RF380R (MLFB 6GT2801-3AB20-0AX1); FCC ID NXW-RF380R01

This device complies with part 15 of the FCC rules. Operation is subject to the following two conditions:

(1) This device may not cause harmful interference, and

(2) this device must accept any interference received, including interference that may cause undesired operation.

Caution

Any changes or modifications not expressly approved by the party responsible for compliance could void the user's authority to operate the equipment.

Note

This equipment has been tested and found to comply with the limits for a Class A digital device, pursuant to part 15 of the FCC Rules.

These limits are designed to provide reasonable protection against harmful interference when the equipment is operated in a commercial environment. This equipment generates, uses, and can radiate radio frequency energy and, if not installed and used in accordance with the instruction manual, may cause harmful interference to radio communications. Operation of this equipment in a residential area is likely to cause harmful interference in which case the user will be required to correct the interference at his own expense.

IC information

This device complies with Industry Canada licence-exempt RSS standard(s). Operation is subject to the following two conditions:

(1) This device may not cause interference, and

(2) this device must accept any interference, including interference that may cause undesired operation of the device.

Le présent appareil est conforme aux CNR d`Industrie Canada applicables aux appareils radio exempts de licence. L`exploitation est autorisée aux deux conditions suivantes :

(1) L`appareil ne doit pas produire de brouillage, et

(2) l'utilisateur de l`appareil doit accepter tout brouillage radioélectrique subi, même si le brouillage est susceptible d`en compromettre le fonctionnement.

DRAFT

5.7.10 Certificates and Approvals

Certificates for USA and Canada

C UL US	Underwriters Laboratories (UL) acc. to standard UL 60950, Report E11 5352 and Canadian standard C22.2 No. 60950 (I.T.E) or acc. to UL508 and C22.2 No. 142 (IND.CONT.EQ)

5.7.11 Dimension drawing

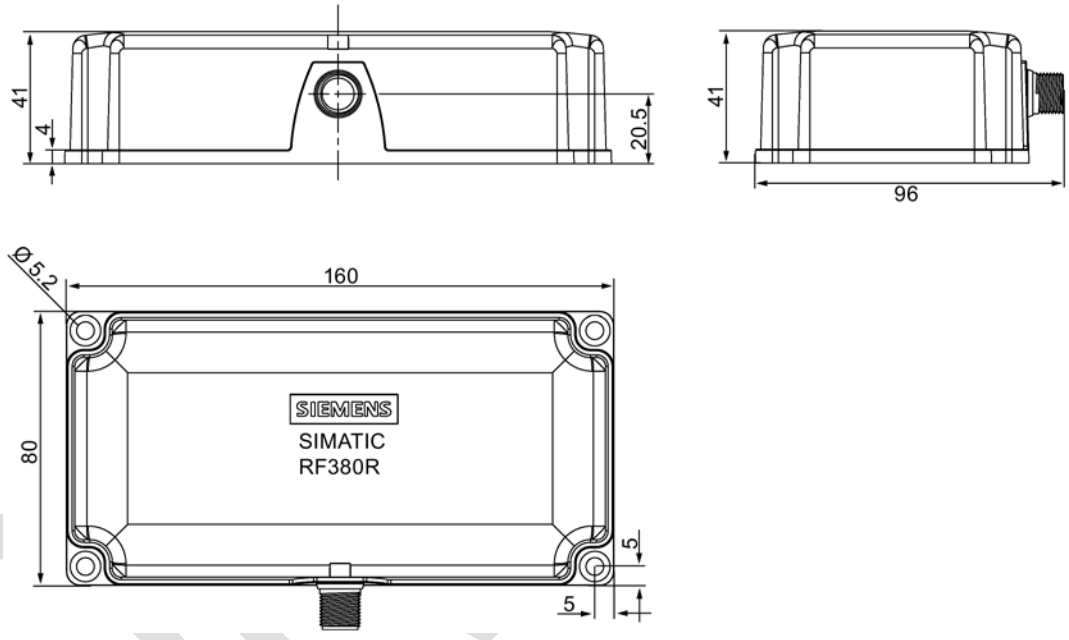

Figure 5-30 Dimension drawing RF380R

Dimensions in mm

5.8 SIMATIC RF382R with Scanmode

You will find detailed information on the SIMATIC RF382R with Scanmode on the Internet (https://support.industry.siemens.com/cs/ww/en/ps/15038).

5.8.1 Characteristics

RF382R Scanmode	Characteristics	
	Design	① RS-232 or RS-422 interface ② Status display
	Operating range	Suitable for high speeds, e.g. in • Suspension conveyor systems • Assembly lines • Production • Order picking

5.8.2 RF382R with Scanmode ordering data

Table 5- 32 RF382R Scanmode ordering data

	Article number
RF382R Scanmode	6GT2801-3AB20-0AX0

DRAFT

5.8.3 Pin assignment RF382R Scanmode RS232 interface

You can connect the RF382R Scanmode reader via the internal RS-232/RS-422 interface or via a higher-level system. (See section "Basic rules (Page 101)") Make sure that the pin assignment is correct. In the factory settings, the reader is set to RS-232. Siemens can change the interface to RS-422.

Table 5- 33 Connector and reader pin assignment

Pin	Pin Device end 8-pin M12	Assignment	
		RS-232	RS-422
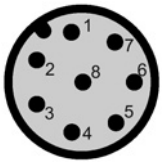	1	+ 24 V	+ 24 V
	2	RXD	- Transmit
	3	0 V	0 V
	4	TXD	+ Transmit
	5	not used	+ Receive
	6	not used	- Receive
	7	not used	not used
	8	Ground (shield)	Ground (shield)

5.8.4 LED operating display

The operational statuses of the reader are displayed by the LEDs. The LED can adopt the colors green, red or yellow and the statuses off , on , flashing :

Table 5- 34 LED operating display on the reader

Color	Meaning
	Operating voltage present, reader ready for operation
	Transponder present
	Red LED for error display is activated permanently if correct operation of the reader cannot be guaranteed (e. g. faulty start, checksum error during operation).

5.8.5 Ensuring reliable data exchange

The "center point" of the transponder must be situated within the transmission window.

5.8.6 Mounting on metal

The RF382R can be mounted directly on metal. Flush mounting on metal is not permitted.

DRAFT

5.8.7 Minimum distance between several RF382R Scanmode readers

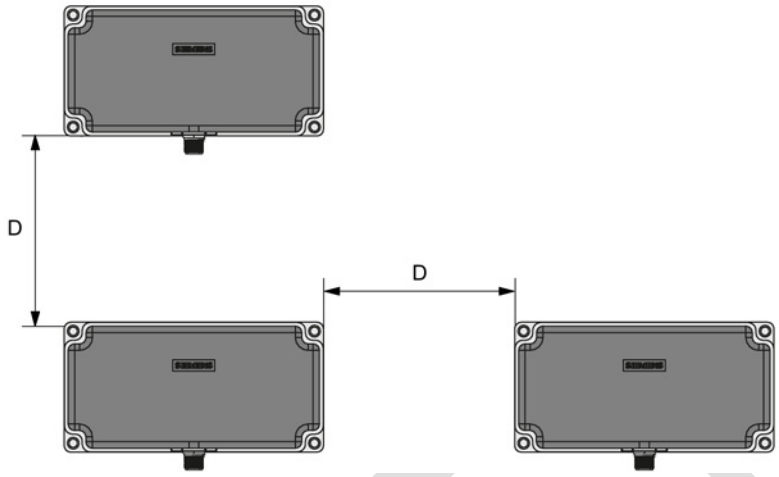

Figure 5-31 Minimum distance between several RF382R Scanmode readers

Minimum distance D from RF382R to RF382R	D ≥ 200 mm

5.8.8 Transmission window

Orientation of fields of the SIMATIC RF382R Scanmode

For many applications it may be best to operate the reader so that the tags move from left to right (or from right to left) at a certain distance in front of the narrow edge of the reader. With this direction of movement, the horizontal reader field is used, see figure below.

You also have the option of moving the tags up and down (or down and up) past the narrow edge of the reader. With this direction of movement, uses the vertical reader field is used.

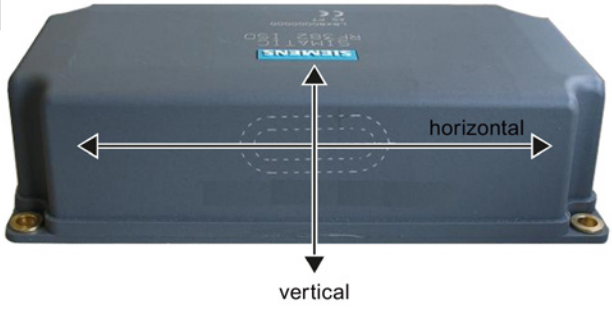

Figure 5-32 Definition of horizontal and vertical reader field

DRAFT

Maximum field strength

The reader creates the maximum field approximately 13 mm below the upper reader edge. For the largest possible reading range the tags you want to read should move in this range. This applies regardless of whether the horizontal or the vertical field is used.

Figure 5-33 Line of maximum magnetic field strength

The area of the maximum field strength and, therefore, the maximum range is identified by a laser icon:

Figure 5-34 Laser labeling

DRAFT

Transmission window horizontal field

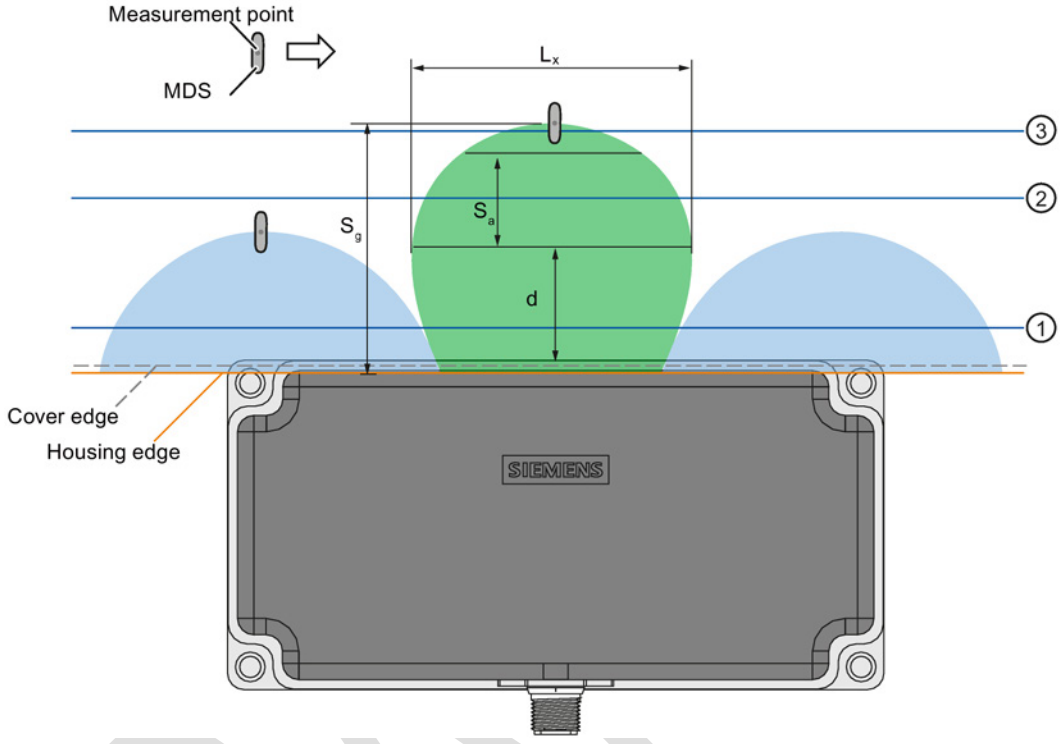

Figure 5-35 Distance definition horizontal field

Green	Main field (processing field)
Blue	Secondary fields, horizontal field
L_x	Maximum length of the main field, horizontal field
d	Distance from the reader edge at which maximum horizontal main field length L exists
S_a	Operating range in the main field
S_g	Limit distance
①	Level 1
②	Level 2
③	Level 3
⇒	Direction of motion of the transponder

Operating range (S_a)

The operating range lies between Level ① and Level ③.

The operating range between Levels ① and ② includes secondary fields.

The recommended operating range therefore lies in the green main field between Level 2 and Level 3.

Limit distance (S_g)

The limit distance lies on Level ③.

Transmission window vertical field

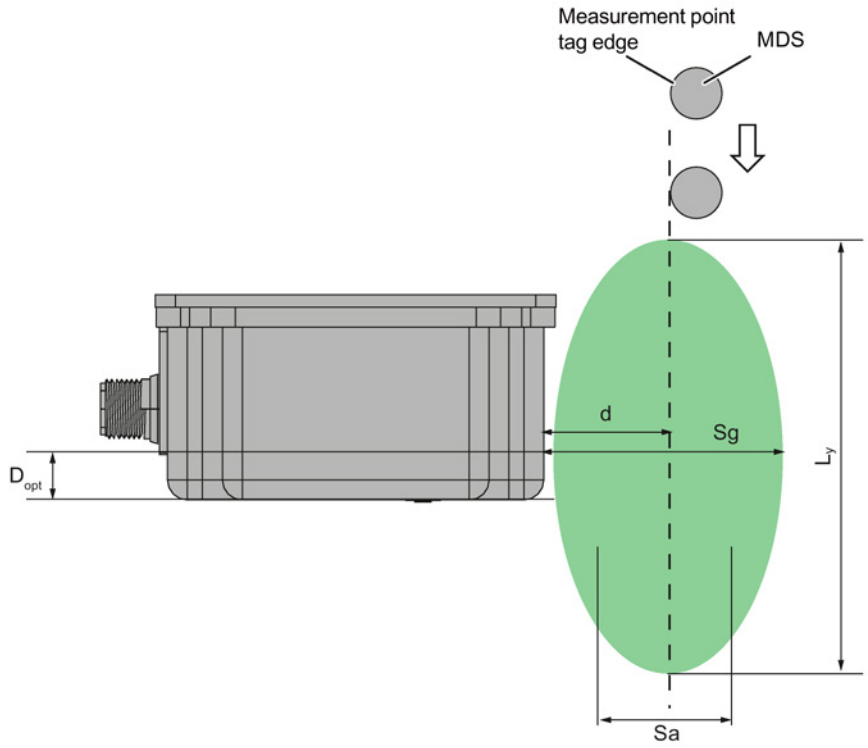

Figure 5-36 Distance definition vertical field

Green	Main field (processing field)
L_y	Maximum length of the main field, vertical field
d	Distance from the reader edge at which maximum vertical main field length L_y exists
S_a	Operating range in the main field
S_g	Limit distance
D_{opt}	= 13 mm
⇓	Direction of motion of the transponder

5.8.9 Technical specifications

Table 5- 35 Technical specifications of the RF382R reader with Scanmode

	6GT2801-3AB20-0AX0
Product type designation	SIMATIC RF382R Scanmode
Radio frequencies	
Operating frequency, rated value	13.56 MHz
Electrical data	
Maximum range	75 mm
Maximum data transmission speed reader ↔ transponder	ISO transponder
• Read	• approx. 1500 bytes/s
Transmission speed	19.2, 57.6, 115.2 kBd
Read/write distances of the reader	See section "Field data for transponders, readers and antennas (Page 48)."
MTBF (Mean Time Between Failures)	115 years
Interfaces	
Electrical connector design	M12, 8-pin
Standard for interfaces for communication	RS-232 (factory setting, can be changed to RS-422)
Antenna	integrated
Mechanical specifications	
Housing	
• Material	• Plastic PA 12
• Color	• Anthracite
Recommended distance to metal	0 mm
Supply voltage, current consumption, power loss	
Supply voltage	24 VDC
Typical current consumption	140 mA

DRAFT

	6GT2801-3AB20-0AX0	
Permitted ambient conditions		
Ambient temperature		
• During operation	• -25 to +70 °C	
• During transportation and storage	• -40 to +85 °C	
Degree of protection to EN 60529	IP67	
Shock-resistant to EN 60721-3-7, Class 7 M3	50 g	
Vibration-resistant to EN 60721-3-7, Class 7 M3	20 g	
Torsion and bending load	Not permitted	
Design, dimensions and weight		
Dimensions (L x W x H)	160 x 80 x 41 mm	
Weight	550 g	
Type of mounting	4 x M5 screws; 1.5 Nm	
Cable length for RS-422 interface, maximum	RS-422	RS-232
	1000 m	30 m
LED display design	3-color LED	
Standards, specifications, approvals		
Proof of suitability	Radio to R&TTE directives EN 300330, EN 301489, CE, FCC, UL/CSA	

5.8.10 Approvals

FCC information

Siemens SIMATIC RF382R (MLFB 6GT2801-3AB20-0AX0); FCC ID NXW-RF382R

This device complies with part 15 of the FCC rules. Operation is subject to the following two conditions:

(1) This device may not cause harmful interference, and

(2) this device must accept any interference received, including interference that may cause undesired operation.

Caution

Any changes or modifications not expressly approved by the party responsible for compliance could void the user's authority to operate the equipment.

DRAFT

Note

This equipment has been tested and found to comply with the limits for a Class A digital device, pursuant to part 15 of the FCC Rules.

These limits are designed to provide reasonable protection against harmful interference when the equipment is operated in a commercial environment. This equipment generates, uses, and can radiate radio frequency energy and, if not installed and used in accordance with the instruction manual, may cause harmful interference to radio communications. Operation of this equipment in a residential area is likely to cause harmful interference in which case the user will be required to correct the interference at his own expense.

IC information

This device complies with Industry Canada licence-exempt RSS standard(s). Operation is subject to the following two conditions:

(1) This device may not cause interference, and

(2) this device must accept any interference, including interference that may cause undesired operation of the device.

Le présent appareil est conforme aux CNR d`Industrie Canada applicables aux appareils radio exempts de licence. L`exploitation est autorisée aux deux conditions suivantes :

(1) L`appareil ne doit pas produire de brouillage, et

(2) l'utilisateur de l`appareil doit accepter tout brouillage radioélectrique subi, même si le brouillage est susceptible d`en compromettre le fonctionnement.

Certificates for USA and Canada

C UL US	Underwriters Laboratories (UL) acc. to standard UL 60950, Report E11 5352 and Canadian standard C22.2 No. 60950 (I.T.E) or acc. to UL508 and C22.2 No. 142 (IND.CONT.EQ)

DRAFT

5.8.11 Dimensional diagram

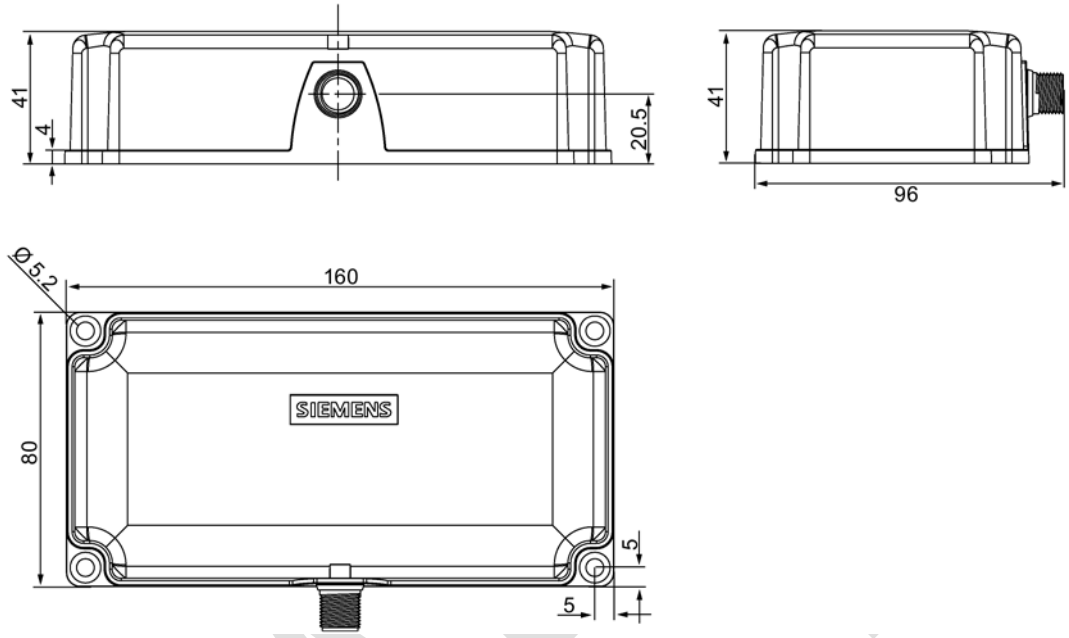

Figure 5-37 Dimension drawing

DRAFT

DRAFT