SIEMENS

SIMATIC Ident

RFID systems SIMATIC RF600

System Manual

Introduction 1

Safety Information 2

System overview of SIMATIC RF600 3

RF600 system planning 4

Readers 5

Antennas 6

Transponder 7

Integration into networks 8

System diagnostics 9

Accessories 10

Appendix A

06/2019

J31069-D0171-U001-A22-7618

Legal information

Warning notice system

This manual contains notices you have to observe in order to ensure your personal safety, as well as to prevent damage to property. The notices referring to your personal safety are highlighted in the manual by a safety alert symbol, notices referring only to property damage have no safety alert symbol. These notices shown below are graded according to the degree of danger.

⚠ DANGER
indicates that death or severe personal injury **will** result if proper precautions are not taken.

⚠ WARNING
indicates that death or severe personal injury **may** result if proper precautions are not taken.

⚠ CAUTION
indicates that minor personal injury can result if proper precautions are not taken.

NOTICE
indicates that property damage can result if proper precautions are not taken.

If more than one degree of danger is present, the warning notice representing the highest degree of danger will be used. A notice warning of injury to persons with a safety alert symbol may also include a warning relating to property damage.

Qualified Personnel

The product/system described in this documentation may be operated only by **personnel qualified** for the specific task in accordance with the relevant documentation, in particular its warning notices and safety instructions. Qualified personnel are those who, based on their training and experience, are capable of identifying risks and avoiding potential hazards when working with these products/systems.

Proper use of Siemens products

Note the following:

⚠ WARNING
Siemens products may only be used for the applications described in the catalog and in the relevant technical documentation. If products and components from other manufacturers are used, these must be recommended or approved by Siemens. Proper transport, storage, installation, assembly, commissioning, operation and maintenance are required to ensure that the products operate safely and without any problems. The permissible ambient conditions must be complied with. The information in the relevant documentation must be observed.

Trademarks

All names identified by ® are registered trademarks of Siemens AG. The remaining trademarks in this publication may be trademarks whose use by third parties for their own purposes could violate the rights of the owner.

Disclaimer of Liability

We have reviewed the contents of this publication to ensure consistency with the hardware and software described. Since variance cannot be precluded entirely, we cannot guarantee full consistency. However, the information in this publication is reviewed regularly and any necessary corrections are included in subsequent editions.

Siemens AG
Digital Industries
Postfach 48 48
90026 NÜRNBERG
GERMANY

℗ 05/2019 Subject to change

Copyright © Siemens AG 2005 - 2019.
All rights reserved

Table of contents

1 Introduction 13

1.1 Preface 13

1.2 Abbreviations and naming conventions 14

2 Safety Information 15

2.1 General safety instructions 15

2.2 Safety instructions for third-party antennas as well as for modifications to the RF600 system 19

2.3 Safety distance to transmitter antenna 20
2.3.1 Safety distance between transmitter antenna and personnel 20
2.3.2 Minimum distance to antenna in accordance with ETSI 21
2.3.3 Minimum distance to antenna in accordance with FCC 22

3 System overview of SIMATIC RF600 25

3.1 Application areas of RF600 26

3.2 System components 27

3.3 Features 30

4 RF600 system planning 33

4.1 Overview 33

4.2 Possible system configurations 33
4.2.1 Intralogistics scenario 33
4.2.2 Scenario for workpiece identification 36
4.2.3 Goods tracking scenario 37
4.2.4 Scenario incoming goods, distribution of goods and outgoing goods 38

4.3 Antenna configurations 39
4.3.1 Antenna configuration example 40
4.3.2 Possibilities and application areas for antenna configurations 41
4.3.3 Transponder orientation in space 45
4.3.4 Specified minimum and maximum spacing of antennas 46
4.3.5 Reciprocal influence of read points 47
4.3.6 Read and write range 48
4.3.7 Static/dynamic mode 49
4.3.8 Operation of several readers within restricted space 50
4.3.8.1 Using more than one reader 50
4.3.8.2 Optimization of robustness of tag data accesses for readers that are operated simultaneously 50
4.3.8.3 Frequency hopping 51
4.3.9 Guidelines for selecting RFID UHF antennas 51
4.3.9.1 Note safety information 51
4.3.9.2 Preconditions for selecting RFID UHF antennas 51
4.3.9.3 General application planning 52

4.3.9.4 Types of antenna ... 53
4.3.9.5 Antenna cables ... 53

4.4 Minimum distances and maximum ranges ... 55
4.4.1 Configurations of antenna and transponder ... 55
4.4.2 Effects of the materials of the mounting surfaces on the range ... 58
4.4.3 Maximum read/write ranges of transponders ... 59
4.4.4 Minimum distances between antennas and transponders ... 65
4.4.5 Influence of electrically conductive walls on the range ... 65

4.5 Environmental conditions for transponders ... 66

4.6 The response of electromagnetic waves in the UHF band ... 66
4.6.1 The effect of reflections and interference ... 66
4.6.2 Influence of metals ... 67
4.6.3 Influence of liquids and non-metallic substances ... 68
4.6.4 Influence of external components ... 68

4.7 Planning and installation of UHF read points ... 69
4.7.1 Technical basics ... 69
4.7.2 Implementation of UHF RFID installations ... 72
4.7.2.1 Preparation phase ... 72
4.7.2.2 Test phase ... 73
4.7.2.3 Setting up read points ... 74
4.7.3 Dealing with field disturbances ... 77
4.7.3.1 Types and approaches to solutions ... 77
4.7.3.2 Measures for eliminating field disturbances ... 78

4.8 Chemical resistance of the readers and transponders ... 80
4.8.1 Readers ... 80
4.8.1.1 Overview of the readers and their housing materials ... 80
4.8.1.2 Pocan CF2200 ... 81
4.8.2 Transponder ... 83
4.8.2.1 Overview of the transponders and their housing materials ... 83
4.8.2.2 Acrylonitrile/butadiene/styrene (ABS) ... 83
4.8.2.3 Polyamide 12 (PA12) ... 84
4.8.2.4 Polyamide 6.6 (PA 6.6) ... 86
4.8.2.5 Polyamide 6.6 GF (PA 6.6 GF) ... 87
4.8.2.6 Polyethylene terephthalate (PET) ... 89
4.8.2.7 Polypropylene (PP) ... 91
4.8.2.8 Polyphenylene sulfide (PPS) ... 95
4.8.2.9 Polyvinyl chloride (PVC) ... 96

4.9 Regulations applicable to frequency bands ... 97

4.10 Guidelines for electromagnetic compatibility (EMC) ... 97
4.10.1 Overview ... 97
4.10.2 What does EMC mean? ... 98
4.10.3 Basic rules ... 99
4.10.4 Propagation of electromagnetic interference ... 100
4.10.5 Equipotential bonding ... 102
4.10.6 Cable shielding ... 103

5 Readers 105

5.1 Overview 105

5.2 SIMATIC RF610R 107
5.2.1 Description 107
5.2.1.1 Overview 107
5.2.1.2 Ordering data 108
5.2.1.3 Pin assignment of the power supply interface (X80 24VDC) 109
5.2.1.4 Pin assignment of the Industrial Ethernet interface (X1 P1) 110
5.2.1.5 Ground connection 110
5.2.2 Planning operation 110
5.2.2.1 Internal antenna 110
5.2.2.2 Interpretation of radiation patterns 115
5.2.3 Installation / mounting 115
5.2.4 Configuration/integration 116
5.2.5 Technical specifications 117
5.2.6 Dimension drawing 120
5.2.7 Certificates and approvals 121
5.2.7.1 CE mark 121
5.2.7.2 Country-specific certifications 121
5.2.7.3 FCC information 122
5.2.7.4 IC-FCB information 123
5.2.7.5 Other certificates and approvals 123

5.3 SIMATIC RF615R 124
5.3.1 Description 124
5.3.1.1 Overview 124
5.3.1.2 Ordering data 125
5.3.1.3 Pin assignment of the DI/DQ interface (X10 DI/DQ) 126
5.3.1.4 Switching scheme for the DI/DQ interface 126
5.3.1.5 Pin assignment of the power supply interface (X80 24VDC) 128
5.3.1.6 Pin assignment of the Industrial Ethernet interface (X1 P1) 129
5.3.1.7 Ground connection 129
5.3.2 Planning operation 130
5.3.2.1 Internal antenna 130
5.3.2.2 External antenna 135
5.3.3 Installing/mounting 136
5.3.4 Configuration/integration 137
5.3.5 Technical specifications 138
5.3.6 Dimension drawing 141
5.3.7 Certificates and approvals 142
5.3.7.1 CE mark 142
5.3.7.2 Country-specific certifications 142
5.3.7.3 FCC information 143
5.3.7.4 IC-FCB information 144
5.3.7.5 Other certificates and approvals 144

5.4 SIMATIC RF650R 145
5.4.1 Description 145
5.4.1.1 Overview 145
5.4.1.2 Ordering data 146
5.4.1.3 Pin assignment of the DI/DQ interface (X10 DI/DQ) 147
5.4.1.4 Switching scheme for the DI/DQ interface 148

5.4.1.5 Pin assignment of the power supply interface (X80 24VDC) ... 153
5.4.1.6 Pin assignment of the Industrial Ethernet interface (X1 P1) ... 155
5.4.1.7 Grounding connection ... 155
5.4.2 Planning operation ... 156
5.4.2.1 Antenna/read point configurations ... 156
5.4.3 Installation/mounting ... 157
5.4.4 Configuration/integration ... 161
5.4.5 Technical specifications ... 162
5.4.6 Dimension drawing ... 165
5.4.7 Certificates and approvals ... 166
5.4.7.1 FCC information ... 168
5.4.7.2 IC-FCB information ... 169

5.5 SIMATIC RF680R ... 170
5.5.1 Description ... 170
5.5.1.1 Overview ... 170
5.5.1.2 Ordering data ... 171
5.5.1.3 Pin assignment of the DI/DQ interface (X10 DI/DQ) ... 172
5.5.1.4 Switching scheme for the DI/DQ interface ... 173
5.5.1.5 Pin assignment of the power supply interface (X80 24VDC) ... 178
5.5.1.6 Pin assignment of the Industrial Ethernet interface (X1 P1; X1 P2) ... 180
5.5.1.7 Grounding connection ... 180
5.5.2 Planning operation ... 181
5.5.2.1 Antenna/read point configurations ... 181
5.5.3 Installation/mounting ... 182
5.5.3.1 Mounting/Installation ... 183
5.5.4 Configuration/integration ... 186
5.5.5 Technical specifications ... 187
5.5.6 Dimension drawing ... 190
5.5.7 Certificates and approvals ... 191
5.5.7.1 FCC information ... 193
5.5.7.2 IC-FCB information ... 194

5.6 SIMATIC RF685R ... 195
5.6.1 Description ... 195
5.6.1.1 Overview ... 195
5.6.1.2 Ordering data ... 196
5.6.1.3 Pin assignment of the DI/DQ interface (X10 DI/DQ) ... 197
5.6.1.4 Switching scheme for the DI/DQ interface ... 198
5.6.1.5 Pin assignment of the power supply interface (X80 24VDC) ... 203
5.6.1.6 Pin assignment of the Industrial Ethernet interface (X1 P1; X1 P2) ... 205
5.6.1.7 Grounding connection ... 205
5.6.2 Planning operation ... 206
5.6.2.1 Internal antenna ... 206
5.6.2.2 External antenna ... 215
5.6.3 Installation/mounting ... 216
5.6.4 Configuration/integration ... 220
5.6.5 Technical specifications ... 221
5.6.6 Dimension drawing ... 224
5.6.7 Certificates and approvals ... 225
5.6.7.1 FCC information ... 227
5.6.7.2 IC-FCB information ... 228

5.7 SIMATIC RF650M 229
5.7.1 Description 229
5.7.2 Field of application and features 229

6 Antennas 231

6.1 Overview 231

6.2 SIMATIC RF615A 233
6.2.1 Characteristics 233
6.2.2 Ordering data 234
6.2.3 Mounting 234
6.2.4 Connecting the antenna 235
6.2.5 Antenna parameter assignment 236
6.2.6 Antenna patterns 238
6.2.6.1 Alignment of transponders to the antenna 238
6.2.6.2 Antenna pattern ETSI 241
6.2.6.3 Antenna pattern FCC 244
6.2.6.4 Interpretation of directional radiation patterns 247
6.2.7 Technical data 248
6.2.8 Dimension drawing 250
6.2.9 Certificates & approvals 251

6.3 SIMATIC RF620A 252
6.3.1 Characteristics 252
6.3.2 Ordering data 253
6.3.3 Installation 253
6.3.4 Connecting the antenna 254
6.3.4.1 Bending radii and bending cycles of the cable 254
6.3.5 Antenna parameter assignment 255
6.3.6 Antenna patterns 257
6.3.6.1 Alignment of transponders to the antenna 257
6.3.6.2 Antenna pattern ETSI 260
6.3.6.3 Antenna pattern FCC 263
6.3.6.4 Interpretation of directional radiation patterns 266
6.3.7 Technical data 267
6.3.8 Dimension drawing 269
6.3.9 Approvals & certificates 270

6.4 SIMATIC RF640A 271
6.4.1 Characteristics 271
6.4.2 Ordering data 272
6.4.3 Installation 272
6.4.4 Connecting the antenna 273
6.4.4.1 Bending radii and bending cycles of the cable 274
6.4.5 Antenna parameter assignment 274
6.4.5.1 Setting RF640A parameters for RF650R 274
6.4.5.2 Setting RF640A parameters for RF680R/RF685R 276
6.4.6 Antenna patterns 278
6.4.6.1 Antenna radiation patterns in the ETSI frequency band 278
6.4.6.2 Antenna radiation patterns in the FCC frequency band 283
6.4.6.3 Interpretation of directional radiation patterns 288
6.4.7 Technical data 289
6.4.8 Dimension drawing 291
6.4.9 Approvals & certificates 292

6.5 SIMATIC RF642A ... 293
6.5.1 Characteristics ... 293
6.5.2 Ordering data ... 294
6.5.3 Installation ... 294
6.5.4 Connecting the antenna ... 295
6.5.4.1 Bending radii and bending cycles of the cable ... 296
6.5.5 Antenna parameter assignment ... 297
6.5.5.1 Alignment of transponders to the antenna ... 297
6.5.5.2 RF642A parameter assignment ... 300
6.5.6 Antenna patterns ... 302
6.5.6.1 Antenna radiation patterns in the ETSI frequency band ... 302
6.5.6.2 Antenna radiation patterns in the FCC frequency band ... 304
6.5.6.3 Interpretation of directional radiation patterns ... 306
6.5.7 Technical data ... 307
6.5.8 Dimension drawing ... 309
6.5.9 Approvals & certificates ... 310

6.6 SIMATIC RF650A ... 311
6.6.1 Characteristics ... 311
6.6.2 Ordering data ... 312
6.6.3 Installation ... 312
6.6.4 Connecting the antenna ... 313
6.6.4.1 Bending radii and bending cycles of the cable ... 314
6.6.5 Antenna parameter assignment ... 314
6.6.6 Antenna patterns ... 316
6.6.6.1 Antenna patterns in the ETSI frequency band ... 317
6.6.6.2 Antenna patterns in the FCC frequency band ... 319
6.6.6.3 Interpretation of directional radiation patterns ... 321
6.6.7 Technical data ... 322
6.6.8 Dimension drawing ... 324
6.6.9 Approvals & certificates ... 325

6.7 SIMATIC RF660A ... 326
6.7.1 Characteristics ... 326
6.7.2 Ordering data ... 327
6.7.3 Installation ... 327
6.7.4 Connecting the antenna ... 328
6.7.4.1 Bending radii and bending cycles of the cable ... 328
6.7.5 Antenna parameter assignment ... 329
6.7.6 Antenna patterns ... 331
6.7.7 Technical data ... 334
6.7.8 Dimension drawing ... 336
6.7.9 Approvals & certificates ... 337

6.8 SIMATIC RF680A ... 338
6.8.1 Characteristics ... 338
6.8.2 Ordering data ... 340
6.8.3 Installation ... 340
6.8.4 Connecting the antenna ... 341
6.8.4.1 Bending radii and bending cycles of the cable ... 342
6.8.5 Antenna parameter assignment ... 343
6.8.6 Antenna patterns ... 345
6.8.6.1 Antenna patterns in the ETSI frequency band ... 346
6.8.6.2 Antenna patterns in the FCC frequency band ... 350

6.8.6.3 Interpretation of directional radiation patterns 354
6.8.7 Technical data....355
6.8.8 Dimension drawing 357
6.8.9 Approvals & certificates 358

7 Transponder 359

7.1 Overview 359
7.1.1 Mode of operation of transponders....359
7.1.2 Transponder classes and generations....360
7.1.3 Electronic Product Code (EPC) 360
7.1.4 SIMATIC memory configuration of the RF600 transponders and labels 362
7.1.5 Storage and transportation roll goods....363

7.2 SIMATIC RF630L Smartlabel 364
7.2.1 Features....364
7.2.2 Ordering data 365
7.2.3 Technical data....366
7.2.4 Dimension drawings....374
7.2.5 Certificates and approvals 377

7.3 SIMATIC RF642L Smartlabel 378
7.3.1 Features....378
7.3.2 Ordering data 378
7.3.3 Technical specifications 379
7.3.4 Dimension drawing 381

7.4 SIMATIC RF690L Smartlabel 382
7.4.1 Characteristics 382
7.4.2 Ordering data 382
7.4.3 Memory organization 383
7.4.4 Technical specifications 383
7.4.5 Dimension drawing 385
7.4.6 Certificates and approvals 386

7.5 SIMATIC RF610T 387
7.5.1 Features....387
7.5.2 Ordering data 387
7.5.3 Technical specifications 388
7.5.4 Dimension drawing 390
7.5.5 Certificates and approvals 390

7.6 SIMATIC RF610T ATEX....391
7.6.1 Features....391
7.6.2 Ordering data 392
7.6.3 Use of the transponder in hazardous areas....392
7.6.3.1 Use of the transponder in hazardous areas for gases....394
7.6.3.2 Use of the transponder in hazardous areas for dusts....395
7.6.4 Technical specifications 396
7.6.5 Dimension drawing 398
7.6.6 Certificates and approvals 398

7.7 SIMATIC RF620T 399
7.7.1 Characteristics 399
7.7.2 Ordering data 400
7.7.3 Planning the use 400

7.7.3.1 Range when mounted on flat metallic carrier plates ... 400
7.7.3.2 Range when mounted on non-metallic carrier materials ... 401
7.7.4 Technical specifications ... 402
7.7.5 Dimension drawing ... 404
7.7.6 Certificates and approvals ... 405

7.8 SIMATIC RF625T ... 406
7.8.1 Characteristics ... 406
7.8.2 Ordering data ... 407
7.8.3 Planning the use ... 407
7.8.3.1 Optimum antenna/transponder positioning with planar mounting of the transponder on metal ... 407
7.8.3.2 Range when mounted on flat metallic carrier plates ... 408
7.8.3.3 Range when mounted on non-metallic carrier materials ... 409
7.8.3.4 Mounting in metal ... 409
7.8.4 Technical specifications ... 410
7.8.5 Dimension drawing ... 412
7.8.6 Certificates and approvals ... 412

7.9 SIMATIC RF630T ... 413
7.9.1 Characteristics ... 413
7.9.2 Ordering data ... 414
7.9.3 Planning application ... 414
7.9.3.1 Optimum antenna/transponder positioning ... 414
7.9.3.2 Range when mounted on flat metallic carrier plates ... 416
7.9.4 Technical specifications ... 417
7.9.5 Dimension drawing ... 419
7.9.6 Certificates and approvals ... 420

7.10 SIMATIC RF640T ... 421
7.10.1 Characteristics ... 421
7.10.2 Ordering data ... 422
7.10.3 Planning the use ... 422
7.10.3.1 Optimum antenna/transponder positioning with plane mounting of the transponder on metal ... 422
7.10.3.2 Range when mounted on flat metallic carrier plates ... 423
7.10.3.3 Range when mounted on non-metallic carrier materials ... 424
7.10.3.4 Use of the transponder in hazardous areas ... 424
7.10.3.5 Use of the transponder in hazardous areas for gases ... 425
7.10.3.6 Use of the transponder in hazardous areas for dusts ... 427
7.10.4 Technical specifications ... 430
7.10.5 Dimension drawing ... 433
7.10.6 Certificates and approvals ... 434

7.11 SIMATIC RF645T ... 435
7.11.1 Characteristics ... 435
7.11.2 Ordering data ... 435
7.11.3 Technical specifications ... 436
7.11.4 Dimension drawing ... 438
7.11.5 Certificates and approvals ... 440

7.12 SIMATIC RF680T ... 441
7.12.1 Characteristics ... 441
7.12.2 Ordering data ... 442

7.12.3 Planning the use 442
7.12.3.1 Optimum antenna/transponder positioning with plane mounting of the transponder on metal 442
7.12.3.2 Range when mounted on flat metallic carrier plates....443
7.12.3.3 Range when mounted on non-metallic carrier materials 443
7.12.3.4 Use of the transponder in the hazardous area 444
7.12.3.5 Use of the transponder in the hazardous area for gases 444
7.12.3.6 Use of the transponder in the hazardous area for dusts 448
7.12.4 Technical specifications....451
7.12.5 Dimension drawing 453
7.12.6 Certificates and approvals 454

7.13 SIMATIC RF682T 455
7.13.1 Characteristics 455
7.13.2 Ordering data....456
7.13.3 Planning operation....456
7.13.3.1 Optimum antenna/transponder positioning with plane mounting of the transponder on metal 456
7.13.3.2 Note on installation 457
7.13.3.3 Range when mounted on flat metallic carrier plates....457
7.13.4 Technical specifications....458
7.13.5 Dimension drawing 460
7.13.6 Certificates and approvals 461

8 Integration into networks 463

8.1 Overview of parameterization of RF600 reader....463

8.2 Integration in IT networks via the user application 464

8.3 Integration in control networks....464

9 System diagnostics 467

9.1 Diagnostics via the LED displays of the reader 467
9.1.1 How the LED status display works 471
9.1.2 Diagnostics via LED operating display 472

9.2 XML/PLC error messages 473

10 Accessories 481

10.1 Wide-range power supply unit for SIMATIC RF systems 481
10.1.1 Features....481
10.1.2 Scope of supply 481
10.1.3 Ordering data....482
10.1.4 Safety Information....483
10.1.5 Mounting & connecting 485
10.1.6 Pin assignment of DC outputs and mains connection 488
10.1.7 Technical specifications....488
10.1.8 Dimension drawing 491
10.1.9 Certificates and approvals 492

10.2 Power splitter for RF600 systems....494
10.2.1 Characteristics 494
10.2.2 Ordering data....494
10.2.3 Example of a configuration 495
10.2.4 Technical specifications....495

10.2.5 Dimension drawing 496

10.3 Reader and antenna holders 497
10.3.1 Overview 497
10.3.2 Ordering data 497
10.3.3 Mounting with the SIMATIC antenna holder 497
10.3.4 Dimension drawing 499

A Appendix 503

A.1 Certificates & approvals 503

A.2 Service & support 506

Introduction 1

1.1 Preface

Purpose of this document

This system manual contains the information needed to plan and configure the RF600 system.

It is intended both for programming and testing/debugging personnel who commission the system themselves and connect it with other units (automation systems, further programming devices), as well as for service and maintenance personnel who install expansions or carry out fault/error analyses.

Scope of this documentation

This documentation is valid for all supplied versions of the SIMATIC RF600 system and describes the state of delivery as of 06/2019. If you are using older firmware versions, please refer to the 08/2011 edition of the documentation.

Registered trademarks

SIMATIC®, SIMATIC RF®, MOBY®, RF MANAGER® and SIMATIC Sensors® are registered trademarks of Siemens AG.

Recycling and disposal

The products are low in harmful substances, can be recycled and meet the requirements of the Directive 2012/19/EU for disposal of waste electrical and electronic equipment (WEEE).

Do not dispose of the products at public disposal sites.

For environmentally compliant recycling and disposal of your electronic waste, please contact a company certified for the disposal of electronic waste or your Siemens representative.

Note the different country-specific regulations.

History

Currently released versions of the SIMATIC RF600 system manual:

Edition	Comment
11/2005	First edition
...	...
10/2015	Approval for the readers RF650R, RF680R, and RF685R
12/2015	New antennas RF650A and RF680A
10/2016	Revision of the transponder sections
02/2018	Expansion of the documentation by the following: • RF615A antenna • RF645T, RF682T transponders
11/2018	Expansion of the documentation by the following: • Reader SIMATIC RF615R
06/2019	Expansion of the documentation by the following: • Reader SIMATIC RF610R • Transponder RF630L

Declaration of conformity

The EC declaration of conformity and the corresponding documentation are made available to authorities in accordance with EC directives. Your sales representative can provide these on request.

Observance of installation guidelines

The installation guidelines and safety instructions given in this documentation must be followed during commissioning and operation.

1.2 Abbreviations and naming conventions

Abbreviations and naming conventions

The following terms/abbreviations are used synonymously in this document:

Reader	Write/read device (SLG)
Transponder, tag	Data carrier, mobile data storage, (MDS)
Communications module (CM)	Interface module (ASM)

Safety Information 2

2.1 General safety instructions

Note

Heed the safety notices

Please observe the safety instructions on the back cover of this documentation.

SIMATIC RFID products comply with the salient safety specifications to VDE/DIN, IEC, EN, UL and CSA. If you have questions about the admissibility of the installation in the designated environment, please contact your service representative.

WARNING

Safety extra low voltage

The equipment is designed for operation with Safety Extra-Low Voltage (SELV) by a Limited Power Source (LPS). (This does not apply to 100 V ... 240 V devices.)

This means that only safety-extra low voltage (SELV) with a limited power source (LPS) complying with IEC 60950-1 / EN 60950-1 / VDE 0805-1 may be connected to the power supply terminals or the power supply unit for the equipment power supply must comply with NEC Class 2, according to the National Electrical Code (r) (ANSI / NFPA 70).

There is an additional requirement if devices are operated with a redundant power supply:

If the equipment is connected to a redundant power supply (two separate power supplies), both must meet these requirements.

WARNING

Opening the device

D not open the device when energized.

NOTICE

Alterations not permitted

Alterations to the devices are not permitted.

Failure to observe this requirement shall constitute a revocation of the radio equipment approval, CE approval and manufacturer's warranty.

Operating temperature

CAUTION

Increased temperatures on the lower casing

Note that the lower casing of the readers is made of metal. This means that temperatures can occur on the lower casing that are higher than the maximum permitted operating temperature.

CAUTION

Do not expose the readers to direct sunlight

Note that the readers must not be exposed to direct sunlight. Direct sunlight can lead to the maximum permitted operating temperature being exceeded.

Overvoltage protection

NOTICE

Protection of the external 24 VDC voltage supply

If the module is supplied via extensive 24 V supply lines or networks, interference by strong electromagnetic pulses on the supply lines is possible, e.g. from lightning or the switching of large loads.

The connector for the 24 VDC external power supply is not protected against strong electromagnetic pulses. Make sure that any cables liable to lightning strikes are fitted with suitable overvoltage protection.

Repairs

WARNING

Repairs only by authorized qualified personnel

Repairs may only be carried out by authorized qualified personnel. Unauthorized opening of and improper repairs to the device may result in substantial damage to equipment or risk of personal injury to the user.

Lightning protection

CAUTION

Installation only in protected areas

Antennas and readers can be installed in the protected part of a building. When implementing your lightning protection concept, make sure you adhere to the VDE 0182 or IEC 62305 standards.

When installing outdoors, we recommend that you protect the readers/antennas from the weather with a box.

The antenna RF650A must not be installed in the (protected) outdoor area.

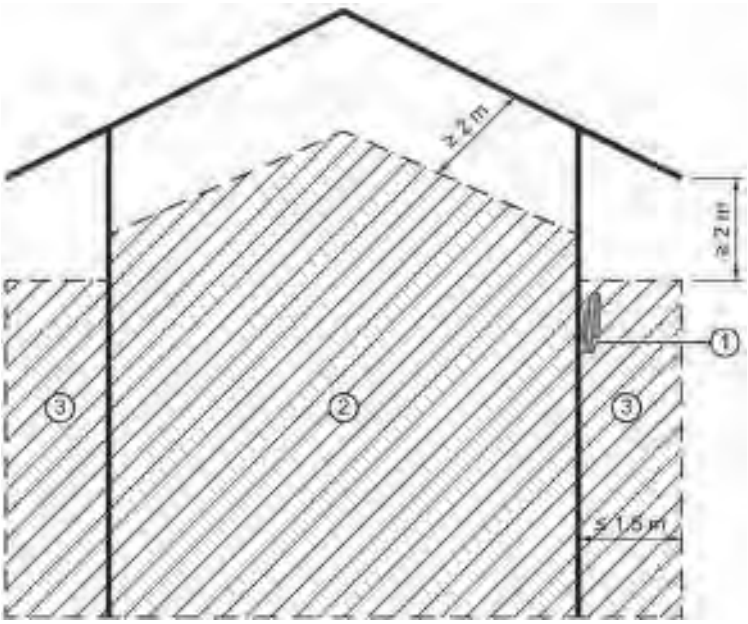

① Antenna or reader
② Protected area (indoors); grounding is not necessary here.
③ Protected area (outdoors); grounding is not necessary here.

Figure 2-1 Mounting the reader in protected areas

System expansion

Only install system expansion devices designed for this device. If you install other upgrades, you may damage the system or violate the safety requirements and regulations for radio frequency interference suppression. Contact your technical customer service or where you purchased your device to find out which system expansions are suitable for installation.

Note

Warranty conditions

If you cause system defects by improperly installing or exchanging system expansion devices, the warranty becomes void.

Security information

Siemens provides products and solutions with industrial security functions that support the secure operation of plants, systems, machines and networks.

In order to protect plants, systems, machines and networks against cyber threats, it is necessary to implement – and continuously maintain – a holistic, state-of-the-art industrial security concept. Siemens' products and solutions constitute one element of such a concept.

Customers are responsible for preventing unauthorized access to their plants, systems, machines and networks. Such systems, machines and components should only be connected to an enterprise network or the internet if and to the extent such a connection is necessary and only when appropriate security measures (e.g. firewalls and/or network segmentation) are in place.

For additional information on industrial security measures that may be implemented, please visit
Link: (http://www.siemens.com/industrialsecurity)

Siemens' products and solutions undergo continuous development to make them more secure. Siemens strongly recommends that product updates are applied as soon as they are available and that the latest product versions are used. Use of product versions that are no longer supported, and failure to apply the latest updates may increase customers' exposure to cyber threats.

To stay informed about product updates, subscribe to the Siemens Industrial Security RSS Feed under
Link: (http://www.siemens.com/industrialsecurity)

2.2 Safety instructions for third-party antennas as well as for modifications to the RF600 system

Always observe the following general safety instructions before selecting a component from a different vendor:

The manufacturer accepts no responsibility for functional suitability or legal implications for the installation of third-party components.

Note

Alterations not permitted

Alterations to the devices are not permitted. If this is not adhered to, the radio approvals, the relevant country approvals (e.g. CE or FCC) and the manufacturer's guarantee are invalidated.

Modifications to the SIMATIC RF600 system

NOTICE

Damage to the system

If you install unsuitable or unapproved extensions, you may damage the system or violate the safety requirements and regulations for radio frequency interference suppression. Contact your technical customer service or where you purchased your device to find out which system expansions are suitable for installation.

NOTICE

Loss of warranty

If you cause defects on the SIMATIC RF600 system by improperly installing or exchanging system expansions, the warranty becomes void.

Note

Loss of validity for type tests and certificates

SIMATIC RFID products comply with the salient safety specifications to VDE/DIN, IEC, EN, UL and CSA. When using RFID components that do not belong to the RF600 range of products, all type tests as well as all certificates relevant to the RF600, such as CE, FCC, UL, CSA are invalidated.

Note

User responsibility for modified product

As a user of the modified product, you accept responsibility for use of the complete RFID product comprising both SIMATIC RF600 components and third-party RFID components. This particularly applies to modification or replacement of:

- Antennas
- Antenna cables
- readers
- Power supply units with connection cables

2.3 Safety distance to transmitter antenna

2.3.1 Safety distance between transmitter antenna and personnel

For antenna configurations where it is possible to be briefly or constantly within the transmission range of the antennas, as in loading ramps, for example, minimum distances must be maintained.

Limits

The ICRP (International Commission of Radiological Protection) has worked out limit values for human exposure to HF fields that are also recommended by the ICNIRP (International Commission of Non Ionizing Radiological Protection). In German legislation on emissions (since 1997), the following limit values apply. These can vary according to frequency:

Frequency f [MHz]	Electrical field strength E [V/m]	Magnetic field strength H [A/m]
10 - 400	27,5	0,073
400 - 2.000	$1.375 \times f^{1/2}$	$0.0037 \times f^{1/2}$
2.000 - 300.000	61	0,16

The limit values for the 900 MHz reader antenna alternating field are thus:

Electrical field strength: E = 41.25 V/m

Magnetic field strength: H = 0.111 A/m

HF power density: E x H = 4.57 W/m^2

2.3.2 Minimum distance to antenna in accordance with ETSI

At a transmission frequency of 900 MHz, the wavelength of the electromagnetic wave λ is approximately 0.34 m. For distances less than 1 λ in the near field, the electrical field strength (1/r) diminishes exponentially to the power three over distance, and for distances greater than 1 λ, it diminishes exponentially to the power two over distance.

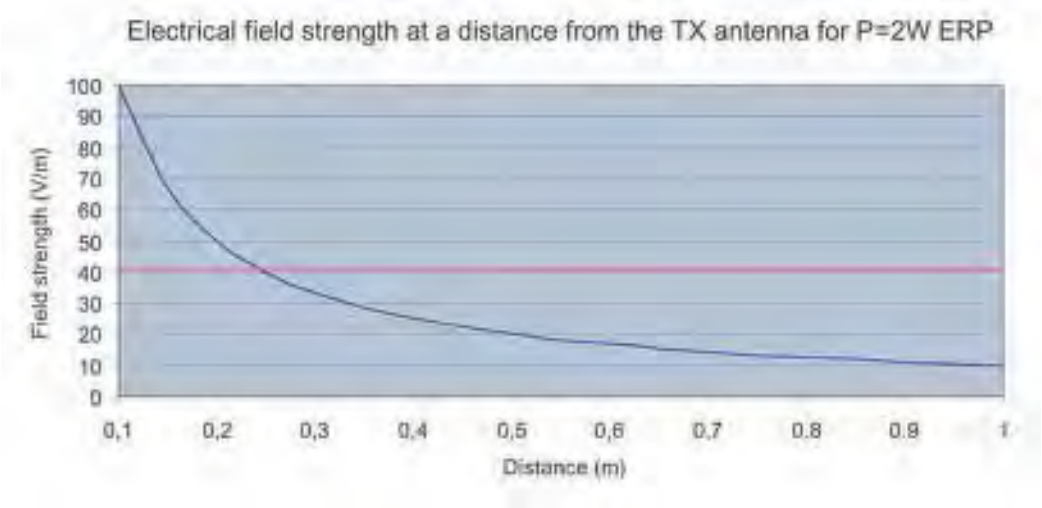

The horizontal line at 41.25 V/m marks the "safety limit value".

For the maximum permitted transmit power ($1/r^2$) in accordance with ETSI (2 W ERP), the "safety distance" is d = 0.24 m. This means that personnel should not remain closer than 24 cm to the transmitter antenna for extended periods (for several hours without interruption). Remaining within the vicinity of the antenna for a brief period, even for repeated periods (at a distance < 0.24 m), is harmless according to current knowledge.

Distance to transmitter antenna [m]	Feld strength [V/m]	% of limit value
1	10	24
5	2	5

If the transmitter power is set lower than the highest permissible value (2 watts ERP), the "safety distance" reduces correspondingly.

The values for this are as follows:

Radiated power ERP [W]	Safety distance to transmitter antenna [m]
2.0	0.24
1.0	0.17
0.5	0.12

Note

Reduced maximum radiated power with RF600 readers

SIMATIC RF610R and RF615R (ETSI) readers have a maximum transmit power of 400 mW. The radiated power depends on the antenna cable and the antenna used, but must not exceed 2 W ERP.

The SIMATIC RF650R (ETSI) reader has a maximum transmit power of 1 W. The radiated power therefore depends on the antenna cable and the antenna used, but must not exceed 2 W ERP.

The SIMATIC RF680R (ETSI) reader has a maximum transmit power of 2 W. The radiated power therefore depends on the antenna cable and the antenna used, but must not exceed 2 W ERP.

The SIMATIC RF685R (ETSI) reader has a maximum radiated power of 2 W ERP. The safety clearance is therefore at least 0.24 m.

When using Siemens products and with suitable configuration via the WBM, the high limits cannot be exceeded.

2.3.3 Minimum distance to antenna in accordance with FCC

For the maximum permitted radiated power in accordance with FCC (4 W EIRP), the "safety distance" is d = 0.26 m. This means that personnel should not remain closer than 26 cm to the transmitter antenna for extended periods (several hours without interruption). Remaining within the vicinity of the antenna for brief period, even repeated periods (at a distance < 0.26 m) is harmless to health according to current knowledge.

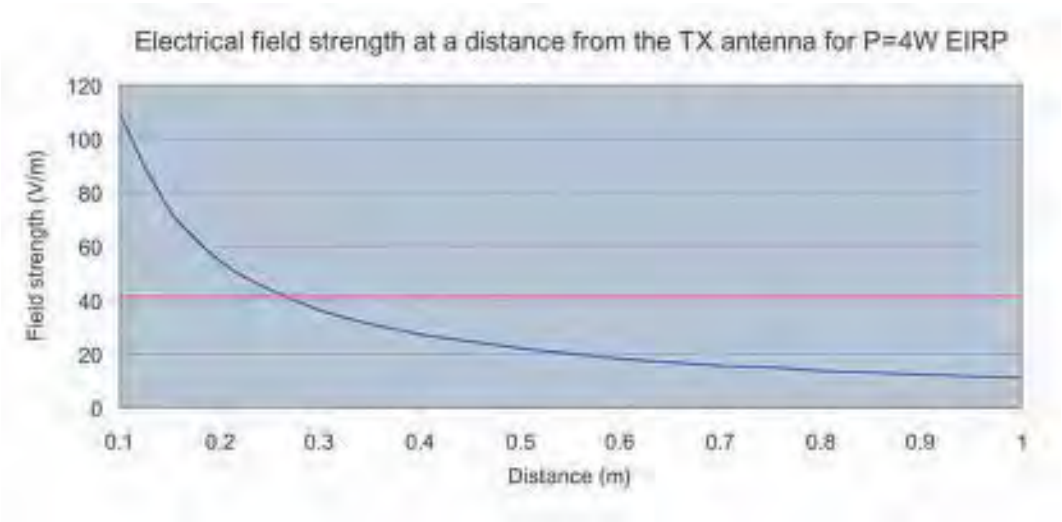

The horizontal line at 41.25 V/m marks the "safety limit value".

Distance to transmitter antenna [m]	Feld strength [V/m]	% of limit value
1	10.9	26
5	2.2	5.3

If the transmit power is set lower than the highest permitted value (4 W EIRP), the "safety distance" reduces correspondingly.

The values for this are as follows:

Radiated power EIRP [W]	Safety distance to transmitter antenna [m]
4.0	0.26
<2.5	>0.20

Generally a safety distance of at least 0.2 m should be maintained.

Note

Reduced maximum radiated power with RF600 readers

SIMATIC RF610R and RF615R (FCC) readers have a maximum transmit power of 400 mW. The radiated power depends on the antenna cable and the antenna used, but must not exceed 2 W ERP.

The SIMATIC RF650R (FCC) reader has a maximum transmit power of 1 W. The radiated power therefore depends on the antenna cable and the antenna used, but must not exceed 4 W EIRP.

The SIMATIC RF680R (FCC) reader has a maximum transmit power of 2 W. The radiated power therefore depends on the antenna cable and the antenna used, but must not exceed 4 W EIRP.

The SIMATIC RF685R (CC) reader has a maximum transmit power of 2 W. This means that the safety distance is at least 0.12 m.

When using Siemens products and with suitable configuration via the WBM, the high limits cannot be exceeded.

System overview of SIMATIC RF600

3

SIMATIC RF600 is an identification system that operates in the UHF range. UHF technology supports large write/read distances with passive transponders.

The general automation and IT structure of a company is shown in the following figure. This comprises several different levels that are described in detail below.

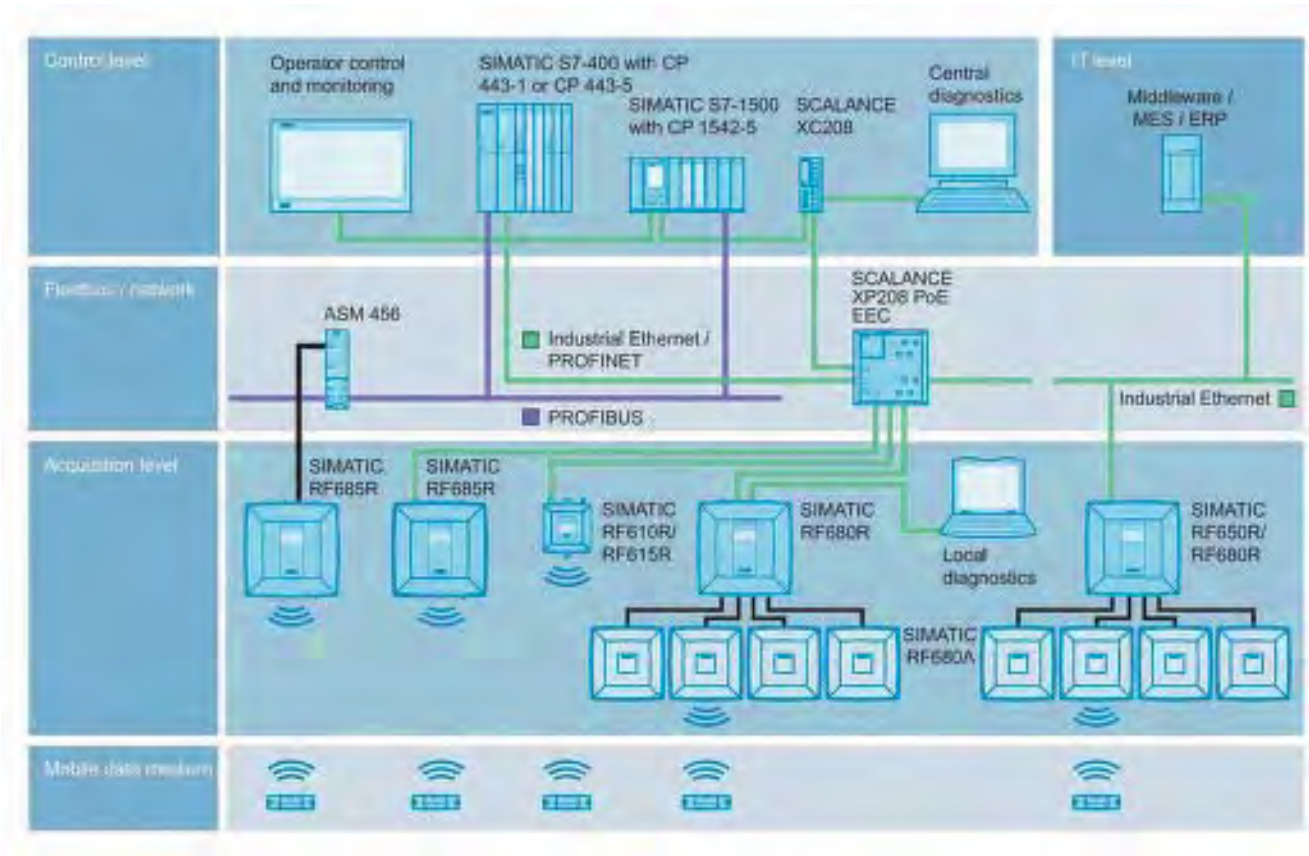

Figure 3-1 System overview SIMATIC RF600 with RF610R, RF615R, RF650R, RF680R, RF685R

- **Acquisition level**

  This level contains the RFID readers that read the appropriate transponder data and transfer it to the next higher level.

- **Control level**

  At the control level, the RFID data is collected, preprocessed and made available to the production control and business administration control levels for further processing.

- **IT level**

  The Manufacturing Execution System (MES) closes the gap between the data that arises in the automation environment (control level) and the logistic and commercial processes

of the company (business administration control). MES solutions are used, for example, for defining and performing production processes.

3.1 Application areas of RF600

RFID (radio frequency identification) permits continuous identification, tracking and documentation of all delivered, stocked and shipped goods in the incoming goods, warehouse, production, production logistics and distribution departments. A small data medium - referred to as SmartLabel, transponder or tag - is attached to every item, package or pallet, and contains all important information. The data medium receives the power it requires via an antenna which is also used for data transmission.

3.2 System components

Table 3- 1 System components of the RF600 product series

Product photo	Description
	SIMATIC RF610R RF610R reader is suitable for applications in production logistics and distribution. It is characterized by a very compact size - with reduced transmit power – as well as an internal antenna. It is integrated for distribution via Ethernet with the XML protocol or OPC UA. EtherNet/IP, PROFINET and PROFIBUS are available for integration in production logistics.
	SIMATIC RF615R RF615R reader is suitable for applications in production logistics and distribution. It is characterized by a very compact size - with reduced transmit power – as well as an internal antenna. It is integrated for distribution via Ethernet with the XML protocol or OPC UA. EtherNet/IP, PROFINET and PROFIBUS are available for integration in production logistics. It is equipped with an integrated antenna and has a connector for an external antenna.
	SIMATIC RF650R The RF650R reader is suitable for applications in logistics. It is integrated via Ethernet with the XML protocol or OPC UA. It has 4 connectors for external antennas.
	SIMATIC RF680R The RF680R reader is suitable for applications in production logistics and distribution. It is integrated for distribution via Ethernet with the XML protocol or OPC UA. For integration in production logistics PROFINET, EtherNet/IP or PROFIBUS are available. As an alternative, integration can also be via PROFIBUS via the serial interface. It has 4 connectors for external antennas.
	SIMATIC RF685R The RF685R reader is suitable for applications in production logistics and distribution. It is integrated for distribution via Ethernet with the XML protocol or OPC UA. For integration in production logistics PROFINET, EtherNet/IP or PROFIBUS are available. As an alternative, integration can also be via PROFIBUS via the serial interface. It is equipped with an integrated antenna with switchable polarization and has a connector for an external antenna.

Product photo	Description
	SIMATIC RF650M The RF650M mobile reader expands the identification system RF600 with a powerful handheld terminal for applications in the areas of logistics, production and service. In addition, it is an indispensable aid for commissioning and testing.
	SIMATIC RF615A and RF620A SIMATIC RF615A and RF620A are linear antennas with a very compact design suitable for industry. They are suitable for UHF transponders with normal (far field) antenna characteristics.
	SIMATIC RF640A The SIMATIC RF640A is a circular antenna of medium size for universal applications, for example material flow and logistics systems.
	SIMATIC RF642A SIMATIC RF642A is a linear antenna of medium size for environments where a lot of metal occurs.
	SIMATIC RF650A SIMATIC RF650A is a circular antenna of medium size for universal use in industrial applications in production and logistics.

Product photo	Description
	SIMATIC RF660A SIMATIC RF660A is a powerful circular antenna for production and logistics applications.
	SIMATIC RF680A SIMATIC RF680A is an antenna whose polarization can be changed (circular, linear horizontal or linear vertical) of medium size for universal use in industrial applications in production and logistics.
	RF600 transponders The RF600 transponder family provides the right solution for every application: RF610T ISO Card is a flexible card suitable for numerous applications. The transponders RF620T, RF625T, RF630T, RF640T and RF645T are designed specially for industrial requirements. They are very rugged and highly resistant to detergents. The RF640T can also be mounted directly on metal. The transponders RF680T and RF682T were developed specifically for use in high temperatures up to 220° C. In the area of Smartlabels, a comprehensive spectrum of competitively priced labels is available for the widest range of requirements. The heat-resistant smart label RF690L can resist temperatures up to 230 °C or 160 °C and is therefore ideally suited to identification tasks in the paint shop/drying area.

3.3 Features

The RF600 identification system has the following performance features:

Table 3- 2 Features of the RF600 RFID system

Type	Contactless RFID (Radio Frequency IDentification) system in the UHF band
Transmission frequency	• ETSI: 865 to 868 MHz • FCC: 902 to 928 MHz • CMIIT: 920.625 to 924.375 MHz • ARIB (STD-T106): 916.8 MHz to 920.4 MHz • ARIB (STD-T107): 920.4 to 923.4 MHz
Standards	ISO 18000-62, ISO 18000-63

Table 3- 3 Features of the RF600 readers

Reader	Antennas	Read/write distance [1]	Interface
RF610R	1 x internal antenna	< 1 m	Ethernet, EtherNet/IP, OPC UA, PROFINET and PROFIBUS
RF615R	1 x internal antenna 1 x antenna connector for external antennas	Internal antenna: < 1 m External antenna: < 3 m	Ethernet, EtherNet/IP, OPC UA, PROFINET and PROFIBUS
RF650R	4 x antenna connectors for external antennas	< 8 m	Ethernet, OPC UA
RF680R	4 x antenna connectors for external antennas	< 8 m	Ethernet, EtherNet/IP, OPC UA, PROFINET and PROFIBUS
RF685R	1 x internal antenna 1 x antenna connector for external antennas	Internal antenna: < 7 m External antenna < 8 m	Ethernet, EtherNet/IP, OPC UA, PROFINET and PROFIBUS

[1] Depends on the connected antenna and the transponder being used

Certificates

RF600 readers support the following certificates and approvals:

- RF610R certificate (https://support.industry.siemens.com/cs/ww/en/ps/25390/cert)
- RF615R certificates (https://support.industry.siemens.com/cs/ww/en/ps/25391/cert)
- RF650R certificates (https://support.industry.siemens.com/cs/ww/en/ps/15085/cert)
- RF680R/RF685R certificates (https://support.industry.siemens.com/cs/ww/en/ps/15088/cert)

Table 3- 4 Characteristics of the RF650M mobile reader

Transmission frequency	• ETSI: 865 to 868 MHz • FCC: 902 to 928 MHz • CMIIT: 920 to 925 MHz
Read/write distance	3 m
Standards	ISO 18000-63

Table 3- 5 Characteristics of the transponders

Version	**Transponders/Smartlabels**	**Designation**	**Standards supported**
	Smartlabel	RF630L RF640L RF690L	ISO 18000-62 ISO 18000-63
	ISO card Container tag Disc tag Powertrain tag Tool tag On Metal Tag Heat-resistant tag Heat-resistant tag	RF610T RF620T RF625T RF630T RF640T (Gen 2) RF645T RF680T RF682T	ISO 18000-62 ISO 18000-63

RF600 system planning

4

4.1 Overview

You should observe the following criteria for implementation planning:

- Possible system configurations
- Antenna configurations
- Environmental conditions for transponders
- The response of electromagnetic waves in the UHF band
- Regulations applicable to frequency bands
- EMC Directives

4.2 Possible system configurations

The SIMATIC RF600 system is characterized by a high level of standardization of its components. This means that the system follows the TIA principle throughout: Totally Integrated Automation. It provides maximum transparency at all levels with its reduced number of interfaces. This ensures optimum interaction between all system components.

The RF600 system with its flexible components offers many possibilities for system configuration. This section shows you how you can use the RF600 components on the basis of various example scenarios.

4.2.1 Intralogistics scenario

This scenario describes the transport of material via conveyor systems that are made up of large numbers of standard elements. They are characterized by long distances, frequent branches (separators, infeed and outfeed), standardized transport containers and high movement speeds. The installation space available for identification technology is limited, and the high number of read points demands a low-cost solution.

Due to the high movement speeds of transport containers in some cases, the limited space available and the fact that the read points are sometimes located very close together, the use of the RF600 system with space-saving antennas and a low transmit power can be recommended.

Features of the scenario

Intralogistics (material flow)

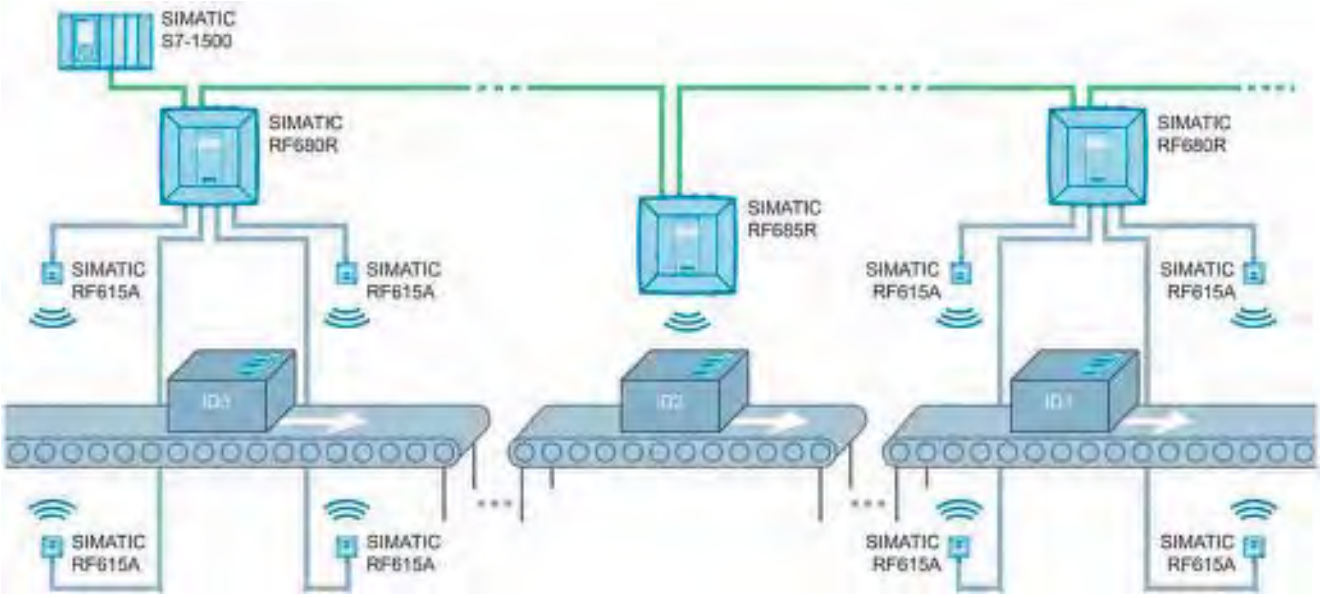

Figure 4-1 Scenario: Intralogistics (material flow)

The conveyor transports the transport containers past the antennas. The transponders attached to the transport containers are always evenly aligned. The transponders in this scenario are transponders of the type SIMATIC RF630L. The conveyor belt has a maximum width of approximately 80 cm in this example. The maximum transport speed is 2 m/s. With this arrangement, only a single transponder needs to be detected each time (single-tag).

In this scenario, SIMATIC RF680R and RF685R are used as readers. Due to the limited space available and the low reading distances, the SIMATIC RF615A antennas are used in this example. As an alternative - with greater available space and to guarantee optimum read reliability - the SIMATIC RF650A antennas can also be used. Because the readers are connected in a bus topology, wiring requirements are reduced.

The reader reads the information from the transponders on the transport containers and forwards it to the SIMATIC S7 controller.

Intralogistics (separator)

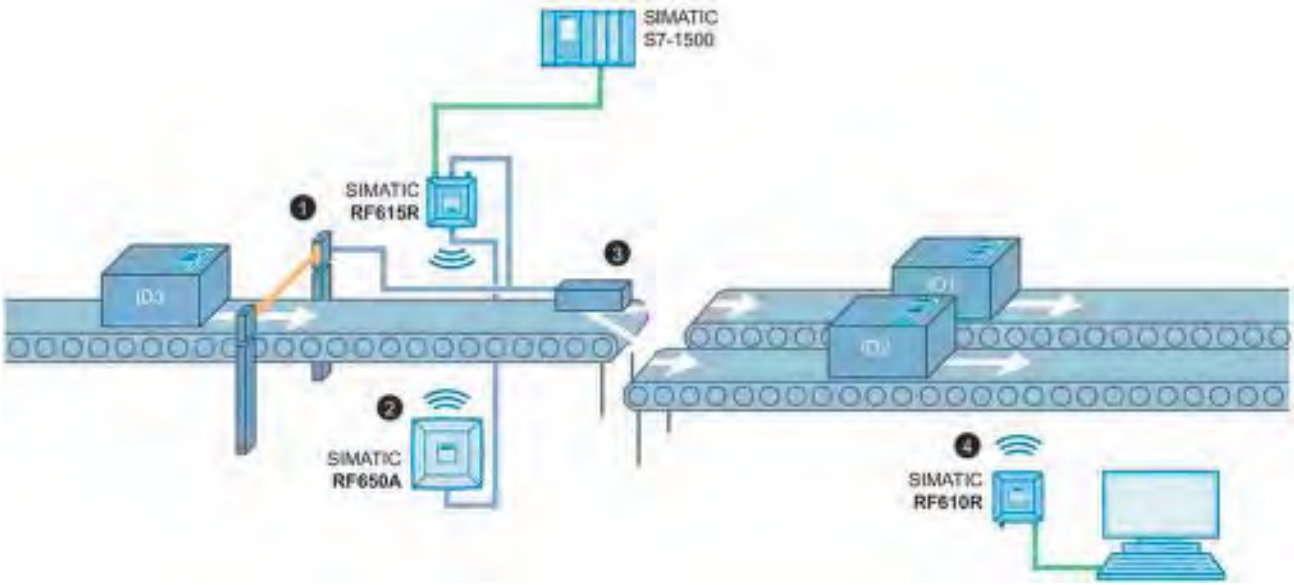

① Trigger by light barrier on DI
② Distributed small gate
③ Separator setting by means of DQ
④ Individual read point

Figure 4-2 Scenario: Intralogistics (separator)

In this example scenario, items must be distributed to the correct storage location in a transport container via a separator. The transponders attached to the transport containers are always evenly aligned. The transponders in this scenario are transponders of the type SIMATIC RF630L. The conveyor belt has a maximum width of approximately 80 cm in this example. The maximum transport speed of the conveyor belt is 2 m/s.

In this scenario, a SIMATIC RF615R with a SIMATIC RF650A and a SIMATIC RF610R external antenna are used as the readers. These readers are inexpensive and feature a very compact design.

When a transport container passes the light barrier ①, the reader reads the information from the transponder on the transport containers and forwards it to the SIMATIC S7 controller. The SIMATIC S7 controls the separator ③ of the conveyor system depending on the transponder information.

4.2.2 Scenario for workpiece identification

A typical characteristic of modern manufacturing scenarios is their multitude of variations. The individual data and production steps are stored in the transponder of a tool holder or product. These data are read by the machining stations during a production process and, if necessary, tagged with status information. This can be used to dynamically identify which production step is the next in the series. This has the advantage that the production line can work automatically without the need to access higher system components. The use of RFID therefore increases the availability of the plant.

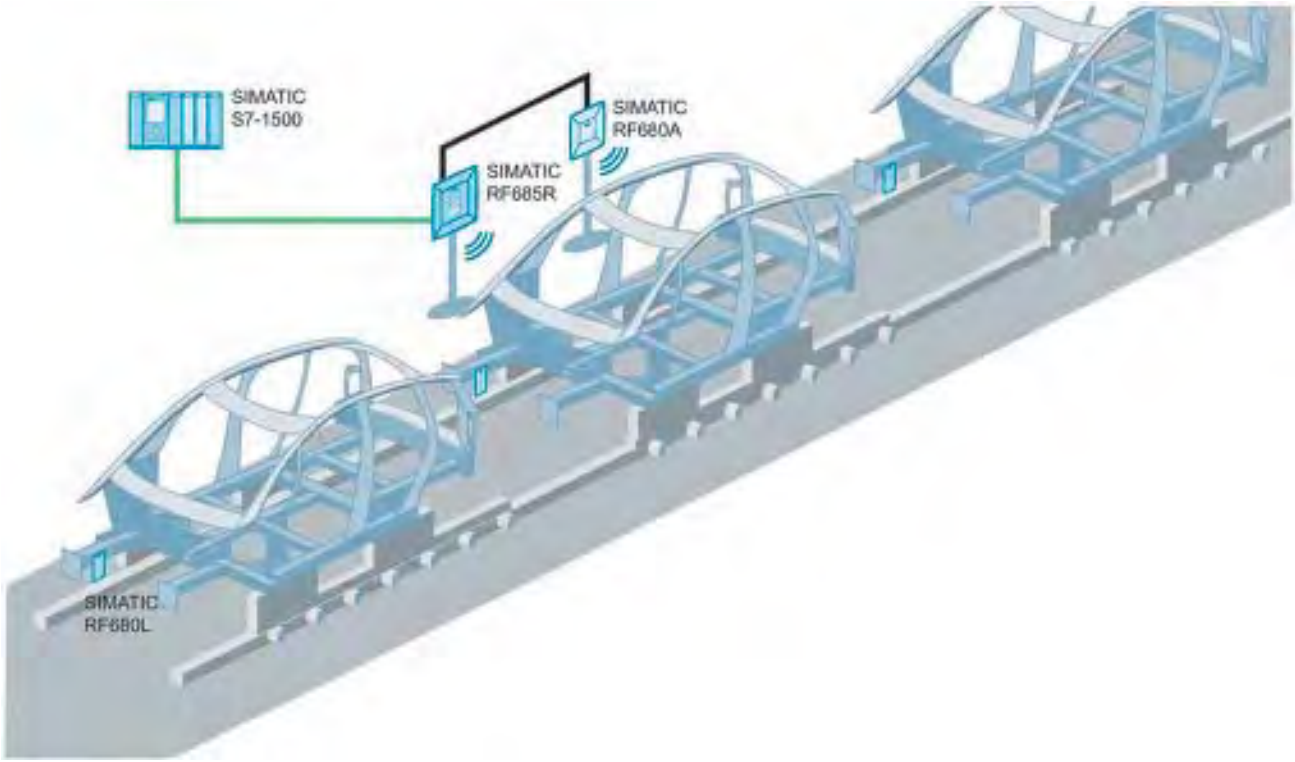

Figure 4-3 Scenario: Workpiece identification

Features of the scenario

Transponders are attached to workpiece holders. Their spatial orientation is always identical. With this arrangement, only a single transponder needs to be detected each time (single-tag).

The SIMATIC RF685R reader reads the information from the transponders with its integrated antenna or the external antenna RF680A and transfers it to the SIMATIC S7 controller. Depending on the stored transponder information, the SIMATIC S7 controller different control tasks, for example, automatically providing a suitable tool for an industrial robot at the correct time.

In a metallic wireless environment or when lots of readers/antennas are mounted close together we recommend that you do not have the readers reading permanently. Instead execute specific read/write commands when an object/transponder is located in front of an antenna or passes it. This "triggering" can be implemented with light barriers or beros. This procedure reduces mutual influence/disruption of the read points and increases the

identification quality of the wanted transponders while reducing the identification of unwanted transponders.

4.2.3 Goods tracking scenario

In this scenario, a gate consisting of a SIMATIC RF650R reader and four antennas checks the goods passing through the gate. All stored goods are equipped with transponders. A traffic light indicates whether the goods may leave the warehouse.

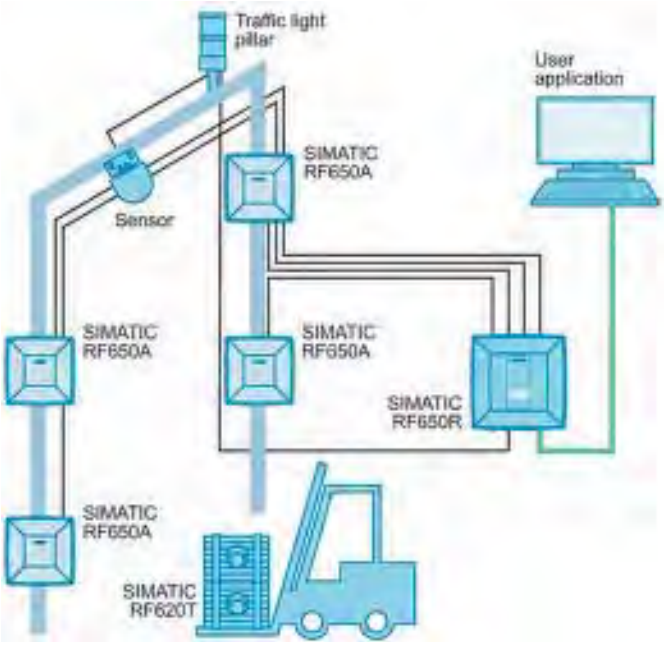

Figure 4-4 Scenario: Goods tracking

Features of the scenario

In this example scenario, the export of goods from a warehouse is checked using the SIMATIC RF650R reader and four SIMATIC RF650A antennas connected to it. A sensor registers when a vehicle passes the gate and reports this to the higher-level system, which then triggers a read operation via the reader.

The reader reads the information from the transponders on the goods and forwards it to the user application, which checks the status of the goods. The traffic light is set to green or red depending on whether the goods are released.

4.2.4 Scenario incoming goods, distribution of goods and outgoing goods

The scenario consists of an RFID system with three readers. The SIMATIC RF650R reader with its four antennas identifies the incoming/outgoing products at the incoming/outgoing goods gates of a factory building hall through which pallets are delivered. Each pallet is fitted with a transponder. The transponders contain user data that provides information about the sender and receiver of the goods. This data is read out and passed on. The goods supplied on the pallets are processed in the factory and then exit the factory through the outgoing goods gate.

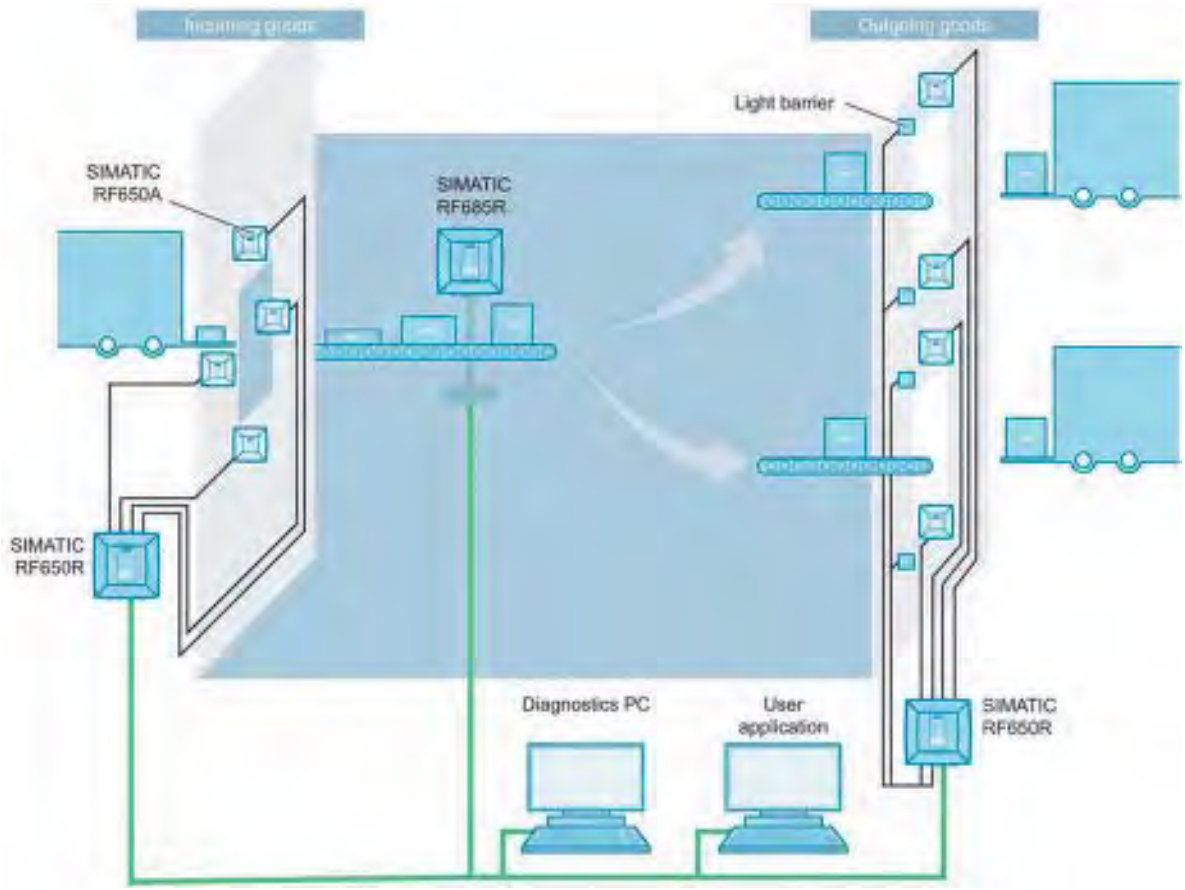

Figure 4-5 Scenario: Incoming goods, distribution of goods and outgoing goods

Features of the scenario

In this example scenario, the SIMATIC RF685R reader is controlled by a light barrier and monitors a conveyor belt; the conveyor belt transports the goods towards two output gates that are assigned to different recipients. Each item has a transponder that is always fitted at the same position and with the same alignment on the item. These transponders also contain user data that provides information about the sender and receiver of the goods. There is a separator at the end of the conveyor belt that determines the output gate to which the goods should be directed. The separator is set according to the results from the reader and the goods are distributed.

After the sorter, the goods are loaded onto pallets - each pallet is fitted with a transponder. These transponders also contain user data that provides information about the sender and receiver of the goods. Based on the data read by the SIMATIC RF650R reader, there is a check to make sure that the correct pallets for the specific receiver are available at the outgoing goods gate. Light barriers are installed to control the reader. Depending on the read results of the reader, the outgoing portal opens, or it remains closed.

4.3 Antenna configurations

Note

Validity of antenna configuration

The following information about the antenna configuration only applies to the antennas of the RF600 family. Refer to the Guidelines for selecting RFID UHF antennas (Page 51) for information on the configuration of third-party antennas.

4.3.1 Antenna configuration example

The following figure shows an example of an application with an antenna configuration of the RF650R. The antennas are positioned at the height at which the transponders to be identified are expected. The maximum width of the portal recommended for reliable operation is 4 m.

The diagram shows a configuration with three antennas. Up to four antennas can be used depending on the local conditions.

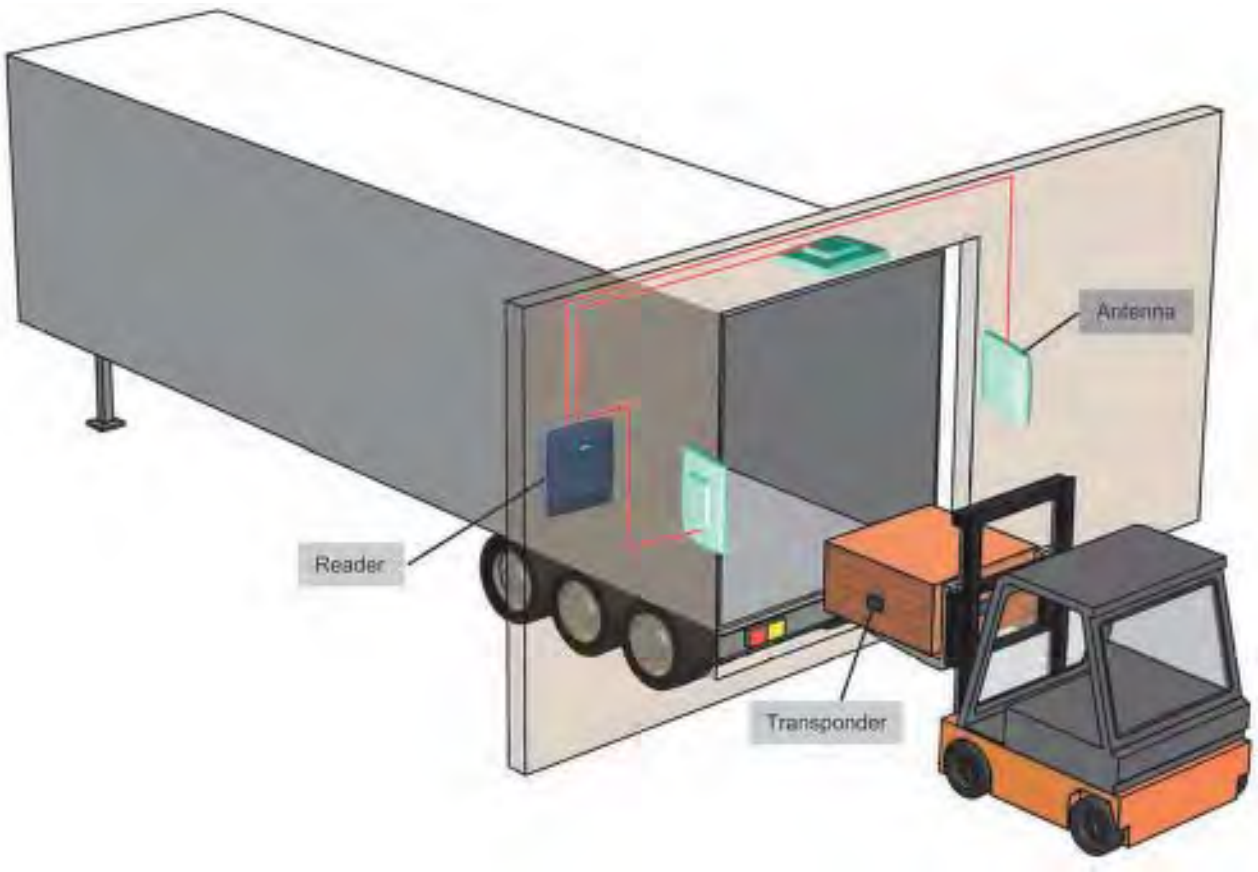

Figure 4-6 Example of an antenna configuration with three antennas

4.3.2 Possibilities and application areas for antenna configurations

Some basic antenna configurations and possible fields of application are shown below.

With the various configurations, please note that up to four external antennas can be connected to the RF650R and RF680R readers, while one external antenna can be connected to the RF615 and RF685R readers. The RF615R and RF685R readers also have an internal antenna. The RF610R reader only has an internal antenna.

Antenna configuration 1	Description/ application areas
	This arrangement of antennas is appropriate when the transponders to be read are only located on one side of the goods to be acquired, for example, if a conveyor belt with passing goods has to be monitored during production and it is precisely defined on which side the transponders to be read are attached. ① Transponder

Antenna configuration 2	Description/ application areas
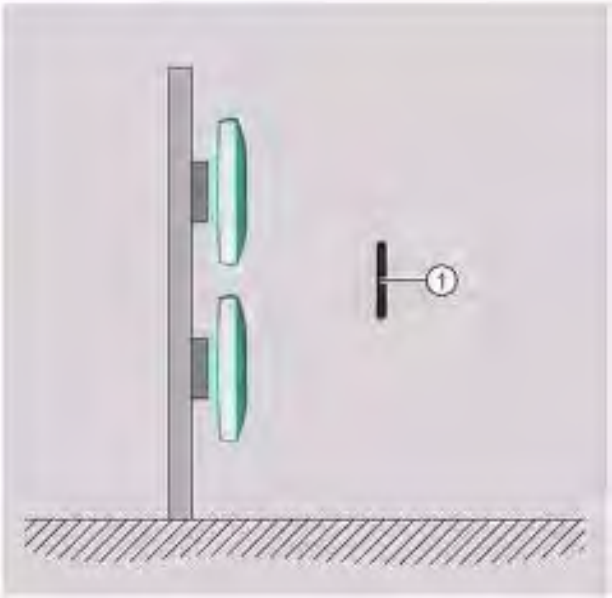	This arrangement of antennas is appropriate when the transponders to be read are only located on one side of the items to be identified, e.g. when pallets are to be identified and it is known on which side the transponders to be read are located. ① Transponder

Antenna configuration 3	Description/ application areas
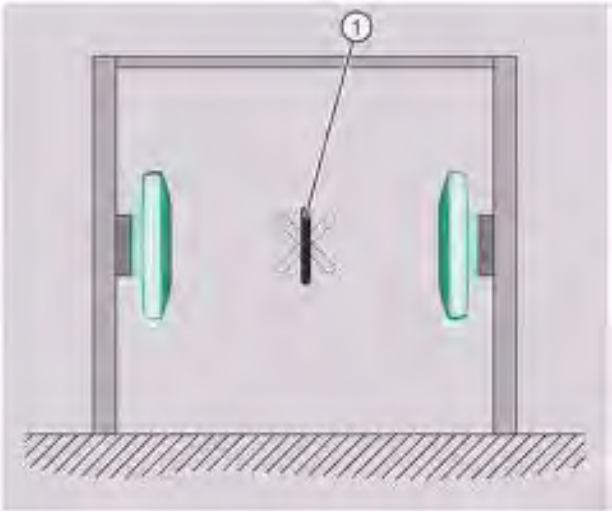	Preferred for the identification of goods at loading gates: The transponder is located in the radiation field of two antennas; for reliable transponder reading, the height of the transponders above floor level must therefore be known with reasonable accuracy. ① Transponder

Antenna configuration 4	Description/ application areas
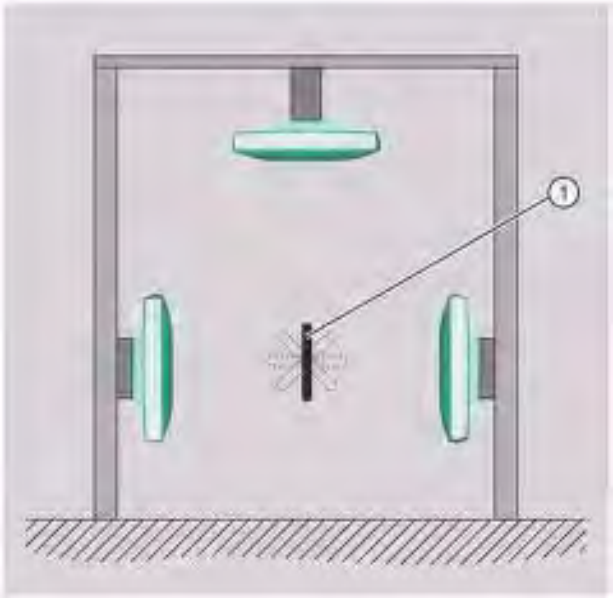	Preferred for the identification of goods at loading gates: Similar to configuration 2, but with additional reading reliability when the transponder is at an angle to the vertical. ① Transponder

Antenna configuration 5	Description/ application areas
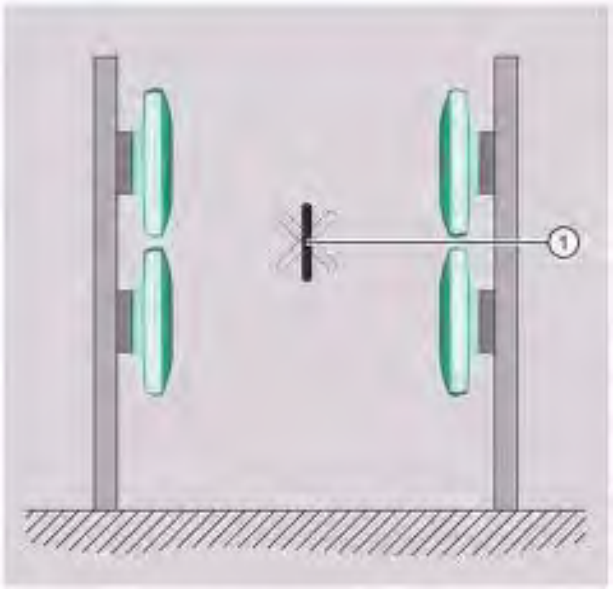	Preferred for the identification of goods at loading gates: The transponder is located in the radiation field of all four antennas, so the transponder position for reliable tag identification is more flexible than in configuration 2. ① Transponder

Antenna configuration 6	Description/ application areas
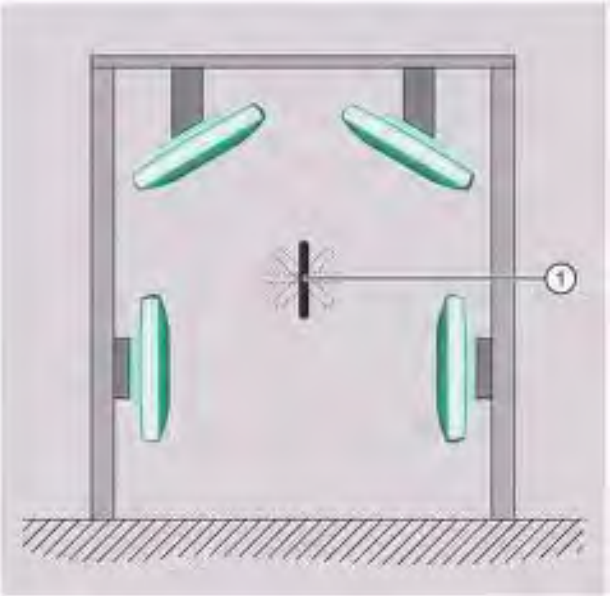	Preferred for the identification of goods at loading gates: Similar to configuration 4, but the reliability of transponder identification is improved as a result of the four antennas at separate locations, so the transponder position is not critical. ① Transponder

Antenna configuration 7	Description/ application areas
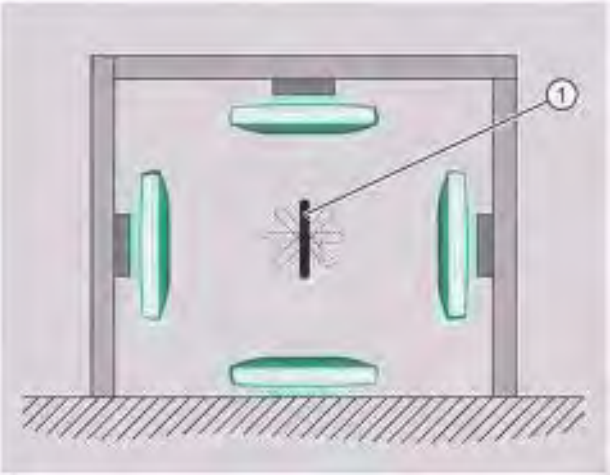	This tunnel configuration is suitable for conveyor belt applications. The goods with the transponders to be read are moving forwards on a conveyor belt but the alignment of the transponders relative to the antennas is not clearly defined. One of the antenna is located on the floor and radiates vertically upwards in the direction of the conveyor belt. A relatively high reading reliability is achieved due to the use of four antennas. ① Transponder

4.3.3 Transponder orientation in space

The alignment of the transponder antenna to the antenna of the reader influences the reading range. For maximum performance and to achieve the maximum read range, the transponder antenna should therefore be aligned parallel to the reader antenna:

Parallel transponder alignment	Large reading range
	The probability of identification of the transponders is at a maximum.

Vertical transponder alignment	Minimal reading range
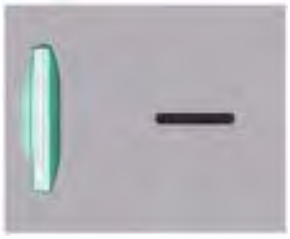	The probability of identification of the transponders is at a minimum.

4.3.4 Specified minimum and maximum spacing of antennas

Specified minimum spacing of antennas

The following diagram shows the specified minimum and maximum spacings for mounting antennas:

Between the antenna and liquids or metals, a minimum distance of 50 cm should be kept to. The distance between the antenna and the floor should also be at least 50 cm.

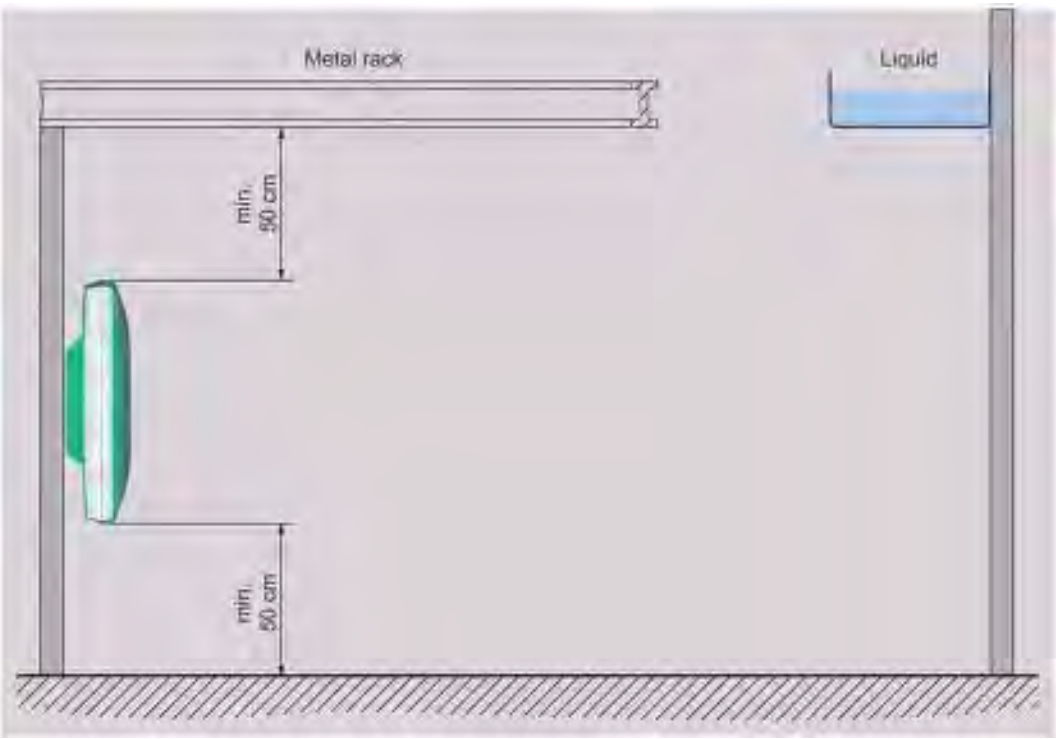

Figure 4-7 Minimum distance to the environment

4.3.5 Reciprocal influence of read points

Antenna alignment and resulting antenna spacing

The minimum distance required between antennas that use the same frequency and that are connected to different readers depends on the maximum transmit power set and the antenna alignment. The following minimum distances apply with maximum transmit power.

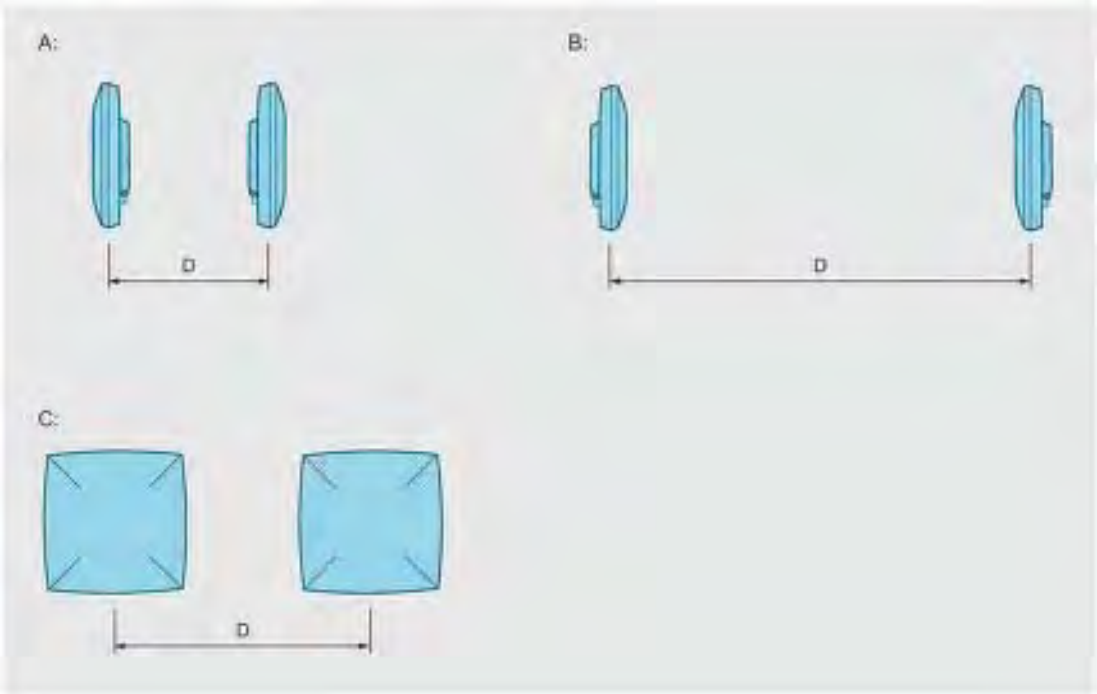

A Back to back

B Pointing at each other

C Next to each other

Figure 4-8 Antenna spacing for different readers/antennas and identical frequencies

Table 4- 1 Antenna alignment and minimum antenna spacing

Antenna configuration	Antenna alignment	Minimum distance (D)		
		RF610R/RF615R with internal antenna	RF685R with internal antenna	RF600 reader with RF615A/RF620A
A	Back to back	1.0 m	0.3 m	1.0 m
B	Pointing at each other	2.0 m	2.0 m	2.0 m
C	Next to each other	1.0 m	0.5 m	1.0 m
		RF600 reader with RF640A/RF642A	RF600 reader with RF650A/RF680A	RF600 reader with RF660A
A	Back to back	1.0 m	0.3 m	0.5 m
B	Pointing at each other	2.0 m	2.0 m	2.0 m
C	Next to each other	2.0 m	0.5 m	0.8 m

Antenna spacing with portal configuration

In the portal configuration, multiple antennas are connected to one reader. In this case, the antennas must not exceed the maximum distance to one another.

Table 4- 2 Maximum antenna spacing of the external antennas with a portal configuration

Antenna configuration	Antenna alignment	Maximum distance (D)		
		RF600 reader with RF615A/RF620A	RF600 reader with RF640A/RF642A	RF600 reader with RF650A/RF660A/RF680A
B	Pointing at each other	2.0 m	8.0 m	8.0 m

1) Portal spacing of up to 10 m is possible. The probability of a read must be checked.

4.3.6 Read and write range

The read/write range between the reader/antenna and the transponder is influenced by the following factors:

Table 4- 3 Factors on the read/write range

Factors	Description
Transmit power of the reader	The higher the transmit power of the reader, the larger the reading range.
Transponder size and design	The larger the transponder antenna, the larger the power input area and therefore the larger the reading range.
Absorption factor of the materials	The higher the absorption of the surrounding material, the smaller the reading range.
Manufacturing quality of the transponders	The better the transponder has been matched to the operating frequencies during manufacturing, the greater the reading range.

Factors	Description
Reflection characteristics of the environment	In a multiple-reflection environment (e.g., in rooms with reflecting surfaces, machinery, or concrete walls), the reading range can be significantly higher than in a low-reflection environment.
Number of transponders in the antenna field	The typical ranges always relate to a transponder installed at the maximum possible distance from the antenna. If there are several transponders located in the antenna field, the distances to all other transponders must not exceed the maximum possible distance to be able to be detected from the antenna field. The width and height of the antenna field within which its transponders can be arranged at a certain distance from the antenna depend on the following: • The radiated power, • Only reading or reading and writing of the transponders (writing requires more power, typically double the power) • The aperture angle (horizontal) • The aperture angle (vertical)

You will find detailed information about the reading range of the individual readers in the "Technical specifications" in the sections for the various readers.

4.3.7 Static/dynamic mode

Reading or writing can be either static or dynamic.

- Reading/writing is counted as being **static** if the tag does not move in front of the antenna and is read or written.
- Reading/writing is counted as being **dynamic** if the tag moves past the antenna during reading/writing.

The following overview shows which environments are suitable for which read or write mode:

Operating mode	Read	Write
Static	Recommended in normal UHF environments	Recommended in normal UHF environments
Dynamic	Recommended under difficult UHF conditions	Not recommended in difficult UHF environments

4.3.8 Operation of several readers within restricted space

4.3.8.1 Using more than one reader

When mounting the readers make sure that there is a minimum clearance of 0.5 m between the readers to avoid them influencing each other.

Avoiding problems

When several RFID readers are used, there is a danger that RFID transponders can also be read out by other readers. Care must therefore be taken to ensure that the transponder can only be identified by the intended reader.

Technical disruptions between readers then occur particularly when they transmit on the same channel (on the same frequency). You will find more detailed information in the section "The response of electromagnetic waves in the UHF band (Page 66)".

4.3.8.2 Optimization of robustness of tag data accesses for readers that are operated simultaneously

Parameter data access reliability

If several readers are to be operated simultaneously in an environment, then the following settings affect the reliability of the reader's access to transponder data:

- Electromagnetic environment (see section "The response of electromagnetic waves in the UHF band (Page 66)")
- Type of transponder (see section "Transponder (Page 359)")
- Number of transponders to be detected by an antenna at a time
- Type of antenna (see section "Antennas (Page 231)" and section "Guidelines for selecting RFID UHF antennas (Page 51)")
- Transponders' distance from and orientation to antennas (see section "Transponder (Page 359)")
- Distances and orientation of antennas of different readers to each other
- Radiated power of antennas

The robustness of transponder data access is improved for readers whenever distances to adjacent readers are increased, radiated power is reduced, and a channel plan (for ETSI readers) is implemented. Adjacent readers are parameterized in the channel plan in such a way that they do not use the same channels.

A channel plan can be created for ETSI and CMIT readers; for FCC readers, it is assumed that the probability of two readers accidentally using the same channel is very low.

4.3.8.3 Frequency hopping

This technique is intended to prevent mutual interference between readers. The reader changes its transmission channel in a random or programmed sequence (FHSS).

Procedure for FCC

Frequency hopping is always active in the FCC country profile. With 50 available channels the probability is low that two readers will be operating on the same frequency. In China, one reader operates on at least 2 channels, e.g. sixteen 2 watt channels.

You will find more information on frequency ranges in the section "Regulations applicable to frequency bands (Page 97)".

Procedure for ETSI

Frequency hopping is optional in the ETSI wireless profile. According to ETSI EN 203 208 V1.4.1, frequency hopping is required in multi-channel operation; without it, only single-channel operation is possible. In this mode, the reader pauses for 100 ms after each 4 s transmission period to comply with the standard.

4.3.9 Guidelines for selecting RFID UHF antennas

4.3.9.1 Note safety information

WARNING

Before planning how to use third-party components, as the operator of a system that comprises both RF600 components and third-party components, you must comply with the safety information in Section Safety instructions for third-party antennas as well as for modifications to the RF600 system (Page 19).

4.3.9.2 Preconditions for selecting RFID UHF antennas

Target group

This section is aimed at configuration engineers who thoroughly understand and wish to carry out the selection and installation of an antenna or a cable for the SIMATIC RF600 system. The various antenna and cable parameters are explained, and information is provided on the criteria you must particularly observe. Otherwise this chapter is equally suitable for theoretical and practice-oriented users.

Purpose of this chapter

This section will help you to select the suitable antenna or the suitable cable taking into account all important criteria and to make the relevant settings in the configuration software/WBM of the SIMATIC RF600 system. Correct and safe integration into the SIMATIC RF600 system is only possible following adaptation of all required parameters.

4.3.9.3 General application planning

Overview of the total SIMATIC RF600 system and its influencing factors

In the following graphic you can see the design of a SIMATIC RF600 reader with connected antenna and the influencing factors. The influencing factors affect the radiated power output.

Radiated power = transmit power ± influencing factors

You must be aware of these influencing factors and also consider them if you wish to integrate components such as antennas or cables into the system. These influencing factors are described in more detail in sections "Antennas (Page 231)" and "Antenna cables (Page 53)".

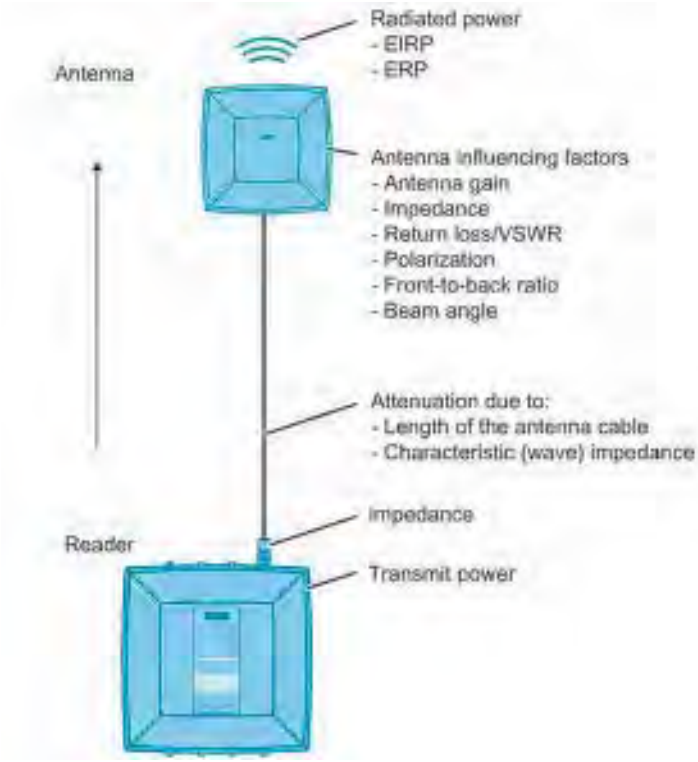

Figure 4-9 Overview diagram: Influencing factors

When operating the SIMATIC RF600 system, you need to observe additional influencing factors such as minimum spacing between antennas in the room.

Environmental conditions

NOTICE
Damage to the device In line with the application, you must take into consideration the mechanical loads (shock and vibration) as well as environmental demands such as temperature, moisture, UV radiation. The device could be damaged if these factors are not considered.

Specifying the transmit / radiated power

Depending on whether you want to use a third-party antenna and/or antenna cable with a reader, you need to select the suitable components. When selecting third-party components orient yourself on the values of comparable Siemens products.

With the readers, the parameters for the transmit/radiated power, antenna gain and cable loss (user-defined) are set using the WBM. In the WBM, you can select the Siemens products being used from a drop-down list quickly and easily, and the values and their effect on the transmit/radiated power are calculated directly. With third-party products, you can enter the relevant values manually.

Based on the entered products/values, the WBM calculates the permitted radiated power and makes sure that this is not exceeded.

4.3.9.4 Types of antenna

In principle, all types of directional antennas can be considered as antennas for integration into the SIMATIC RF600 system. Directional antennas have a preferred direction in which more energy is radiated than in other directions.

RF600 antennas on the other hand, are optimized for operation with RF600 readers and have all the required approvals.

4.3.9.5 Antenna cables

Selection criteria

You must observe the criteria listed below when selecting the appropriate antenna cable.

Characteristic impedance

Note the following points when selecting the antenna cable:

- You can only use coaxial antenna cables when connecting an antenna.
- These antenna cables must have a nominal characteristic impedance of Z = 50 Ohm.

Antenna cable loss

In order to be able to transmit the available UHF power from the RF600 reader to the antenna or antennas, the antenna cable loss should not exceed a value of approx. 5 dB.

Dependency of the cable loss

The cable loss depends on two important factors:

- External characteristics of cable. These includes the cable length, diameter and design.
- As a result of the physical principle, the cable loss is also frequency-dependent. In other words, the cable loss increases the higher the transmitter frequency is. Therefore the cable loss must be specified in the frequency band from 860 to 960 MHz.

Cable vendors usually provide tables or calculation aids for their types of cable which usually include the transmitter and receiver frequencies as well as the cable length. Therefore contact your cable vendor in order to determine the appropriate type of cable using the approximate value referred to above.

Notes on use

Shielding of the antenna cable

Coaxial antenna cables generally have a shielded design and therefore radiate little of the transmitted power to the environment.

Bending radius of the antenna cable

The properties of the cable shield are influenced by mechanical loading or bending. You must therefore observe the static and dynamic bending radii specified by the cable vendor.

Connectors and adapters

You must use connectors and adapters of the type "Reverse Polarity R-TNC" (male connector) for your antenna cables to ensure correct connection to the RF600 reader interface.

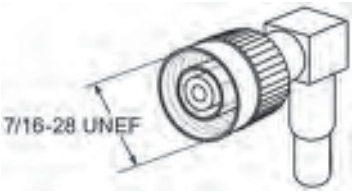

Figure 4-10 Thread standardization

You can find more information in the catalog data of your cable vendor.

4.4 Minimum distances and maximum ranges

The following section describes the configuration of the antenna and transponder relative to each other. The aim of the section is to help you achieve the maximum ranges listed here in a typical electromagnetic environment. One of the main focuses of the section is the effect of the mounting surface of the transponder on the read/write distance.

As the requirements for achieving the maximum distances specified here, note the following points:

- Operate the readers with the maximum possible and permitted transmit power.
- With external antennas, the antenna cable with 1 m cable length and 0.5 dB cable loss is used (6GT2815-0BH10).
- Optimum alignment of the transponder and antenna is ensured (see section "Configurations of antenna and transponder (Page 55)").
- The optimum mounting surface for the transponder has been selected (see section "Effects of the materials of the mounting surfaces on the range (Page 58)")
- The maximum range specified in the section "Maximum read/write ranges of transponders (Page 59)" applies only to read processes.

  With write operations, the range is reduced as described in the section.
- Effects that reduce read/write ranges are avoided (see section "Antenna configurations (Page 39)").

4.4.1 Configurations of antenna and transponder

Below, you will find several possible antenna-transponder configurations that are necessary to achieve the maximum range. The polarization of the antenna plays a decisive role. The antennas are distinguished according the following types:

- Linear antennas:

  RF615A, RF620A, RF642A
- Circular antennas:

  RF640A, RF660A, RF650A
- Antennas that can be switched over (linear/circular):

  RF680A

With the antenna types with linear polarization (RF620A and RF642A), the polarization axes of the antenna and of the transponder must be aligned parallel to each other to achieve a maximum range.

NOTICE
Reduction of the maximum read/write range when using linear antennas If the alignment of the polarization axes of linear antennas (RF620A or RF642A) and transponders is not parallel, this reduces the read/write range. The reduction in the range depends on the angular deviation between the polarization axes of the antenna and the polarization axis of the transponder. You will find further details in the section "Alignment of transponders to the antenna (Page 257)" or "Alignment of transponders to the antenna (Page 297)".

Note

Adjustable RF680A antenna

Note that the antenna RF680A can be switched over. This means that you can set the polarization axis of this antenna manually. Depending on the setting (circular or linear horizontal or linear vertical) the antenna has the properties of a circular or linear antenna.

Possible transponder alignments depending on the antenna type

Circular antennas

To achieve the maximum read/write range with circular antennas, make sure that the planes of the polarization axes have the same alignment. Changing the transponder angle within the x-y plane has no effect on the range.

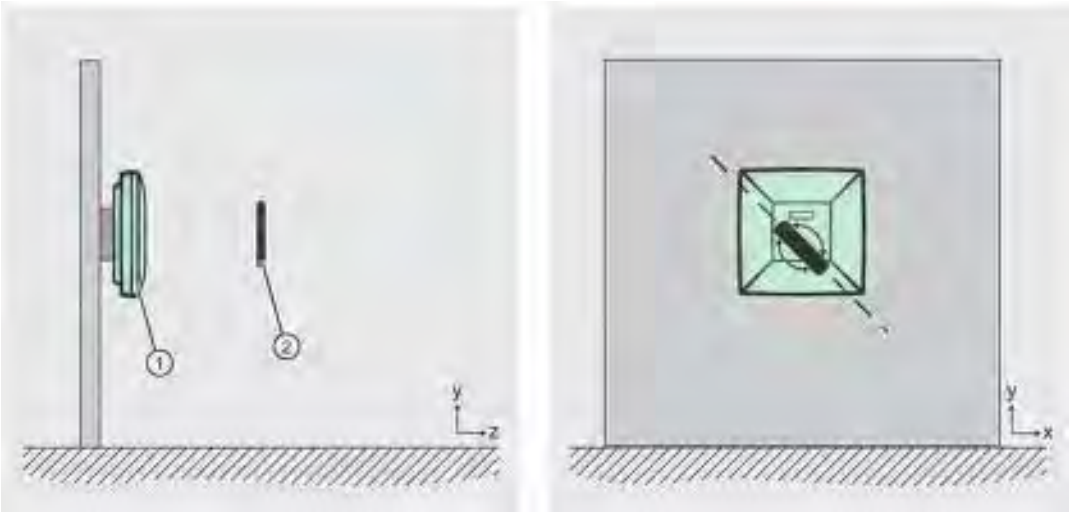

① Circular antenna RF640A, RF650A, RF660A or RF680A

② Transponder

Figure 4-11 Possible transponder alignment with circular antennas

Linear antennas

To achieve the maximum range with linear antennas, make sure that the polarization axes of the antenna and transponder are parallel to each other. Changing the transponder angle within the x-y plane leads to a reduction of the range.

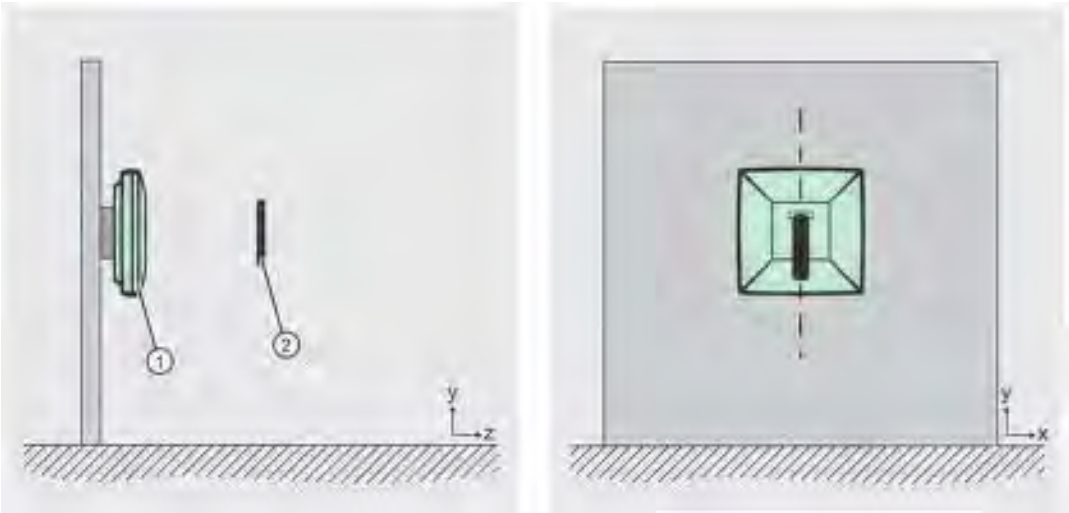

① Linear antenna RF615A, RF620A, RF642A or RF680A
② Transponder

Figure 4-12 Possible transponder alignment with linear antennas

---

Note

Optimum transponder position/alignment

Depending on the electromagnetic properties of the environment, the optimum transponder position and alignment may differ from those shown above.

Suboptimal transponder alignment for all antenna types

If the angle is changed within the y-z plane, this causes a reduction in range for all antenna types.

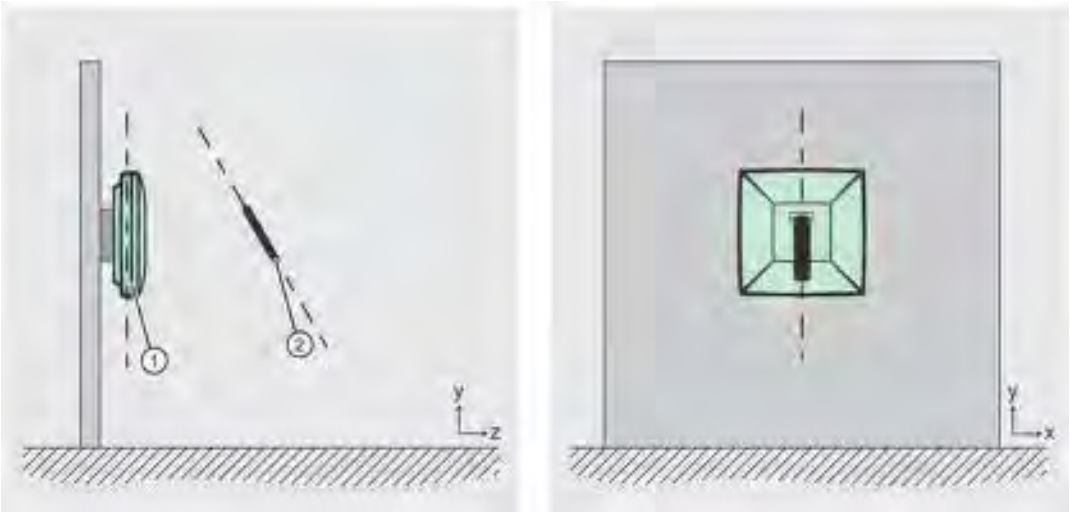

① Antenna RF615A, RF620A, RF640A, RF642A, RF650A or RF680A

② Transponder

Figure 4-13 Suboptimal transponder alignment

Note

Exceptions

The suboptimal transponder alignment does not apply to the transponders RF625T and RF630T. You will find additional information on this in the sections dealing with the transponders.

4.4.2 Effects of the materials of the mounting surfaces on the range

Effects due to antenna mounting

For the RF640A, RF642A, RF650A, RF660A and RF680A antennas, the antenna gain and therefore the maximum read/write range does not depend on the selected material of the mounting surface. In contrast to this, the antenna gain of the RF615A and RF620A antennas and therefore the maximum read/write range of transponders depends on the mounting surface of the antenna. To achieve the maximum range with an RF615A/RF620A antenna, the antenna needs to be mounted on a metallic surface of at least 150 x 150 mm.

You will find more detailed information on antenna gain in the subsections of the section "Antenna patterns (Page 257)".

Effects due to transponder mounting

The maximum read/write range of the transponders depends on the material of the mounting surface. The specified ranges apply when mounted on non-metallic surfaces, such as paper or card, with the RF640L, RF642L, RF625T, RF630T, RF640T and RF645T when mounted on metal.

Mounting on plastic can reduce the maximum read/write range considerably depending on the type of plastic (up to 70%). When mounted on wood, the range is furhter reduced the more moisture the wood contains. Due to the attenuating properties of glass, direct mounting without a spacer can halve the range.

If the RF625T, RF630T, RF640T, RF645T, RF680T or RF682T transponders are mounted on metal, this metallic surface acts as a reflection surface. This surface should therefore be adequately large. To achieve the listed maximum ranges, transponders must be mounted on a metallic mounting surface with a minimum diameter of 150 mm, for the RF630T and RF680T 300 mm. If the metallic mounting surface only has a diameter of 65 mm instead of the required 150 mm, the range is reduced by 65%.

4.4.3 Maximum read/write ranges of transponders

Maximum read ranges

The measurements were made under the following conditions:

- ETSI radio profile
- Maximum possible radiated power of the reader or antenna.
- Optimum transponder alignment and mounting surface
- With antenna connected:
  - With a 3 meter long antenna cable with 1 dB cable loss (article number: 6GT2815-0BH30)
  - RF615A and RF620A: Mounted on metal.
  - RF680A: Circular polarization
- Room temperature of approx. 20 - 25 °C
- Low-reflection environment; Ranges may be smaller or larger depending on the ambient conditions.

The following tables summarize the ranges with the RF610R and RF615R readers, as well as the RF680R and RF685R readers, since the ranges achieved are identical with these readers. Note that the RF610R reader does not have an external antenna connector and the RF680R reader does not have an internal antenna.

Table 4- 4 Read range of the transponders I (all ranges in meters [m])

	SIMATIC RF630L 6GT2810-2AB01-0AX1	SIMATIC RF630L 6GT2810-2AB02-0AX0	SIMATIC RF630L 6GT2810-2AB03	SIMATIC RF630L 6GT2810-2AB04
SIMATIC RF610R SIMATIC RF615R with internal antenna	1.0	1.0	0.6	0.6
SIMATIC RF615R with RF615A	0.4	0.5	0.2	0.2
with RF620A	0.4	0.6	0.2	0.2
with RF640A	1.6	1.8	0.6	1.0
with RF642A	3.5	4.0	1.6	1.8
with RF650A	1.6	2.0	0.9	0.8
with RF660A	3.0	4.0	1.4	1.6
with RF680A	1.6	2.0	1.0	1.0
SIMATIC RF650R with RF615A	1.0	1.2	0.5	0.6
with RF620A	1.0	1.2	0.5	0.7
with RF640A	3.0	3.0	1.6	1.8
with RF642A	5.0	5.0	3.0	3.5
with RF650A	3.0	3.0	1.4	1.8
with RF660A	5.0	5.0	2.5	3.0
with RF680A	3.0	3.0	1.4	1.8
SIMATIC RF685R with internal antenna	5.0	6.0	3.0	3.5
SIMATIC RF680R SIMATIC RF685R with RF615A	1.4	1.8	0.7	0.8
with RF620A	1.6	1.8	0.8	0.9
with RF640A	4.0	4.0	2.0	2.5
with RF642A	5.0	5.0	3.0	3.5
with RF650A	3.5	4.0	1.8	2.5
with RF660A	5.0	5.0	2.5	3.0
with RF680A	4.0	4.5	1.8	2.5

Table 4- 5 Read range of the transponders II (all ranges in meters [m])

	SIMATIC RF630L 6GT2810-2AC82	SIMATIC RF630L 6GT2810-2AE80-0AX2	SIMATIC RF630L 6GT2810-2AE81-0AX1
SIMATIC RF610R **SIMATIC RF615R** with internal antenna	0.4	1.0	0.6
SIMATIC RF615R with RF615A	0.1	0.5	0.2
with RF620A	0.2	0.5	0.2
with RF640A	1.4	2.5	1.0
with RF642A	3.0	4.0	2.5
with RF650A	1.4	2.5	1.0
with RF660A	2.5	4.0	3.5
with RF680A	1.4	2.5	1.2
SIMATIC RF650R with RF615A	0.7	1.4	0.6
with RF620A	0.8	1.4	0.6
with RF640A	2.5	4.0	1.8
with RF642A	4.5	6.0	3.5
with RF650A	2.0	3.5	1.8
with RF660A	4.0	6.0	3.0
with RF680A	2.0	3.5	1.8
SIMATIC RF685R with internal antenna	5.0	6.0	3.5
SIMATIC RF680R **SIMATIC RF685R** with RF615A	1.0	1.8	0.9
with RF620A	1.2	2.0	1.0
with RF640A	3.0	5.0	2.5
with RF642A	5.0	6.0	4.0
with RF650A	3.0	5.0	2.5
with RF660A	4.0	6.0	3.5
with RF680A	3.0	5.0	2.5

Table 4- 6 Read range of the transponders III (all ranges in meters [m])

	SIMATIC RF640L [1)]	SIMATIC RF642L [1)]	SIMATIC RF690L	SIMATIC RF610T
SIMATIC RF610R SIMATIC RF615R with internal antenna	0.5	0.8	0.2	0.8
SIMATIC RF615R with RF615A	0.2	0.2	0.1	0.3
with RF620A	0.2	0.4	0.1	0.4
with RF640A	0.5	1.2	0.1	1.2
with RF642A	2.5	2.0	0.3	3.0
with RF650A	1.0	0.8	0.1	1.2
with RF660A	2.0	1.8	0.3	3.0
with RF680A	0.5	1.0	0.1	1.4
SIMATIC RF650R with RF615A	0.1	0.4	0.2	0.9
with RF620A	0.1	0.4	0.2	0.9
with RF640A	0.8	1.2	2.5	2.5
with RF642A	3.5	2.0	2.0	4.5
with RF650A	1.6	1.2	3.0	2.0
with RF660A	2.5	1.6	1.4	3.5
with RF680A	1.6	1.2	0.9	2.0
SIMATIC RF685R with internal antenna	2.5	2.0	3.0	5.0
SIMATIC RF680R SIMATIC RF685R with RF615A	0.2	0.5	0.2	1.2
with RF620A	0.2	0.5	0.3	1.4
with RF640A	1.0	1.4	3.5	3.0
with RF642A	3.5	2.0	2.0	4.5
with RF650A	2.0	1.6	3.5	3.0
with RF660A	2.5	1.6	1.4	3.5
with RF680A	2.5	1.6	1.4	3.0

[1)] Mounting on metal. Mounting surface with a minimum diameter of 150 mm.

Table 4- 7 Read range of the transponders IV (all ranges in meters [m])

	SIMATIC RF620T [1]	SIMATIC RF625T [2]	SIMATIC RF630T [2]	SIMATIC RF640T [2]
SIMATIC RF610R **SIMATIC RF615R** with internal antenna	1.0	0.3	0.3	0.4
SIMATIC RF615R with RF615A	1.0	0.1	0.1	0.2
with RF620A	1.2	0.1	0.2	0.2
with RF640A	4.0	0.3	0.4	0.7
with RF642A	4.0	1.0	0.5	1.4
with RF650A	3.5	0.2	0.4	0.7
with RF660A	4.0	0.8	1.0	1.2
with RF680A	4.0	0.2	0.5	1.2
SIMATIC RF650R with RF615A	1.8	0.3	0.4	0.6
with RF620A	1.8	0.4	0.4	0.7
with RF640A	5.0	1.0	1.0	1.8
with RF642A	7.0	1.8	2.0	2.5
with RF650A	4.0	1.0	0.9	2.0
with RF660A	6.0	1.4	1.8	2.0
with RF680A	4.0	0.8	0.9	2.0
SIMATIC RF685R with internal antenna	7.0	2.0	2.0	3.5
SIMATIC RF680R **SIMATIC RF685R** with RF615A	2.5	0.5	0.5	0.8
with RF620A	2.5	0.5	0.5	1.0
with RF640A	6.0	1.4	1.4	2.5
with RF642A	7.0	1.8	2.0	4.0
with RF650A	5.0	1.4	1.2	2.5
with RF660A	6.0	1.4	1.8	3.0
with RF680A	6.0	1.2	1.2	3.0

[1] Mounting on a non-metallic surface. Mounting on metal is only permitted in combination with a spacer.

[2] Mounting on metal Mounting surface with a minimum diameter of 150 mm, for the RF630T 300 mm.

Table 4- 8 Read range of the transponders V (all ranges in meters [m])

	SIMATIC RF645T [1]	SIMATIC RF680T [1]	SIMATIC RF682T [1]
SIMATIC RF610R **SIMATIC RF615R** with internal antenna	1.0	1.0	1.0
SIMATIC RF615R with RF615A	0.7	0.6	0.4
with RF620A	0.9	0.7	0.4
with RF640A	1.4	2.0	1.2
with RF642A	3.0	4.0	2.5
with RF650A	1.6	1.8	1.2
with RF660A	3.5	4.0	2.0
with RF680A	1.8	2.0	1.2
SIMATIC RF650R with RF615A	1.2	1.0	0.7
with RF620A	1.4	1.2	0.8
with RF640A	4.0	3.0	2.5
with RF642A	6.0	5.0	4.5
with RF650A	3.5	3.0	2.0
with RF660A	5.0	4.5	4.0
with RF680A	3.0	3.0	2.0
with RF680A	4.5	4.5	3.0
SIMATIC RF685R with internal antenna	6.0	5.0	4.0
SIMATIC RF680R **SIMATIC RF685R** with RF615A	1.8	1.4	1.0
with RF620A	2.0	1.6	1.2
with RF640A	5.0	4.0	3.0
with RF642A	6.0	5.0	4.5
with RF650A	5.0	4.0	2.5
with RF660A	5.0	4.5	4.0
with RF680A	4.5	4.5	3.0

[1] Mounting on metal. Mounting surface with a minimum diameter of 150 mm, for the RF680T 300 mm.

Maximum write ranges

Depending on the transponder type, the reader antenna requires more power for writing than for reading data. When writing, the maximum range reduces by approximately 30 % compared with the read range.

4.4.4 Minimum distances between antennas and transponders

The antennas listed here are all far field antennas. For this reason, a minimum distance between antennas and transponders must be maintained to ensure reliable transponder data access:

Table 4- 9 Minimum distances to be maintained between antennas and transponders

RF600 antenna	Minimum distances to be maintained
RF615A	50 mm
RF620A	50 mm
RF640A	200 mm
RF642A	200 mm
RF650A	200 mm
RF660A	200 mm
RF680A	200 mm
RF685R, internal antenna	200 mm

4.4.5 Influence of electrically conductive walls on the range

NOTICE
Influence of conducting walls on the range If there are metallic (reflecting) surfaces in the immediate vicinity of the transponder, this can have a negative effect on the write/read range. Test the environmental conditions before using the transponder.

4.5 Environmental conditions for transponders

Basic rules

The transponder must not be placed directly on metal surfaces or on containers of liquid. The on-metal transponders designed specifically for use in metallic environments are an exception to this. For physical reasons, a minimum distance must be maintained between the transponder antenna and conductive material. A minimum distance of 5 cm is recommended. The transponder operates better when the distance is greater (between 5 and 20 cm).

- Transponder assembly on non-conductive material (plastic, wood) has a tendency to be less critical than assembly on poorly conductive material.
- The best results are achieved on the materials specified by the transponder manufacturer.
- For more information, refer to the section "Transponder (Page 359)" or ask the relevant transponder manufacturer.

4.6 The response of electromagnetic waves in the UHF band

4.6.1 The effect of reflections and interference

Reflections and interference

Electromagnetic waves in the UHF band behave and propagate in a similar manner to light waves, that is they are reflected from large objects such as ceilings, floors, walls and windows and interfere with each other. Due to the nature of electromagnetic waves, interference can lead to wave amplification which can produce an increased reading range. In the worst case scenario, interference can also result in waves being extinguished which causes gaps in reader coverage.

In some circumstances, reflections can also be beneficial when they cause electromagnetic waves to be routed around objects, in a sense (deflection). This can increase the reading probability.

Due to these electromagnetic characteristics, it is extremely difficult in the multiple-reflection environment that is usually found in real environments on site to determine propagation paths and field strengths for a particular location.

Reducing the effect of reflections/interference on transponder identification

- Reducing the transmit power:
  To minimize interference, we recommend that the transmit power of the reader is reduced until it is sufficient for an identification rate of 100%.
- Increasing the number of antennas:
  More antennas (3 or 4) in a suitable antenna configuration can prevent gaps in reader coverage.

4.6.2 Influence of metals

Metal can have an effect on the electromagnetic field depending on the arrangement or environment. The effect ranges from a hardly determinable influence through to total blocking of communication. The term metal in this context also includes metallized materials that are either coated with metal or shot through with metal to such an extent that UHF radiation cannot penetrate or only to a minimal extent.

The effect of metal on the electromagnetic field can be prevented as follows:

- Do not mount transponders on metal.

  The on-metal transponders designed specifically for use in metallic environments are an exception to this.
- Do not place metallic or conducting objects in the propagation field of the antenna and transponder.

Influence of metal on transponders

Normally transponders must not be mounted directly on metallic surfaces. The transponders designed specifically for use in metallic environments are an exception to this (e.g.: RF690L, RF620T, RF625T, RF630T, RF640T, RF680T).

Due to the nature of the electromagnetic field, a minimum distance must be maintained between the transponder antenna and conductive materials. For more detailed information on the special case of attaching transponders to electrically conducting materials, refer to the relevant transponder sections.

In the case of transponders that are not designed for mounting on metallic materials, the minimum permissible distance from metal is 5 cm. The larger the distance between the transponder and the metallic surface, the better the function of the transponder.

Influence of metal on antennas

Note that metal surfaces located directly in the antenna field reflect the transmitted power directly to the antenna. Due to the nature of the electromagnetic field, a minimum distance must be maintained between the antenna and conductive materials. You can find more detailed information on this in section "Specified minimum and maximum spacing of antennas (Page 46)".

If the reflected energy becomes too strong in the receive path of the reader, this activates a protective circuit that shows itself as an antenna error without there actually being an error in the configuration or a defect on the antenna.

This effect depends very much on the transmitted power, the components being used (cable, antenna) and the distance from the metallic surface to the antenna. In this case, repositioning/realigning the antenna or reducing the radiated power can remedy the situation.

4.6.3 Influence of liquids and non-metallic substances

Non-metallic substances can also affect the propagation of electromagnetic waves and thus the transponder range.

When non-metallic substances or objects that can absorb UHF radiation are located in the propagation field, these can alter the antenna field depending on their size and distance and can even extinguish the field entirely.

The RF damping effect of water, materials containing water, ice and carbon is high. Electromagnetic energy is partly reflected and absorbed.

Oil- or petroleum-based liquids have low RF damping. Electromagnetic waves penetrate these liquids and are only slightly weakened.

4.6.4 Influence of external components

The RED guideline and the relevant standards govern the electromagnetic compatibility requirements. This also concerns the third-party components of the RF600 system. Even though requirements for electromagnetic compatibility are defined, various components will still interfere with each other.

The performance of the RF600 system is highly dependent on the electromagnetic environment of the antennas.

Reflections and interference

On the one hand, antenna fields will be weakened by absorbing materials and reflected by conducting materials. When electromagnetic fields are reflected, the antenna field and reflecting fields overlap (interference).

Third-party components in the same frequency band

On the other hand, third-party components may transmit on the same frequency band as the reader, or the third-party components may transmit in different frequency bands with side bands that overlap with the frequency band of the reader. This results in a reduction of the "signal-to-noise" ratio which reduces the performance of an RF600 system.

If a DECT station that is transmitting in the 2 GHz band, for example, is located in the receiving range of an antenna of the RF600 system, the performance of the write and read access to the transponder may be reduced.

4.7 Planning and installation of UHF read points

Due to their comparatively large effective range, RFID UHF systems (frequency band 865 - 928 MHz) have different requirements in terms of planning, commissioning and operation compared with the HF systems commonly used up to now in automation (frequency band 13.56 MHz). This section describes important rules for preparation and implementation of the RFID UHF systems.

4.7.1 Technical basics

General

In contrast to inductively coupled HF systems, in UHF technology, there is full propagation of the radio waves just as in other wireless systems (radio, TV etc). There are both magnetic and electrical field components present. The following graphic shows the structure of a UHF system. One characteristic is the design of the transponder that differs greatly from the structure used in HF systems, e.g. the use of a dipole or helix antenna.

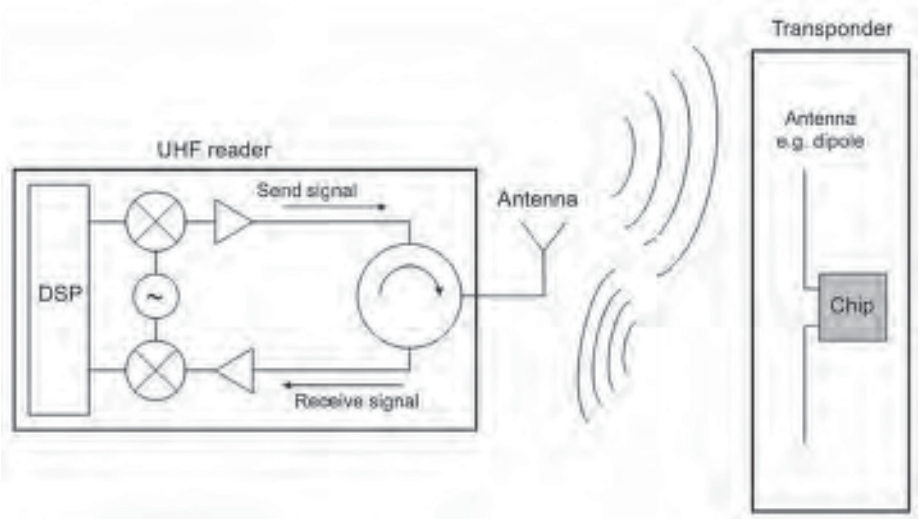

Figure 4-14 Structure of a UHF RFID system

RSSI value

The signal strength of the transponder response is known as the RSSI value (Received Signal Strength Indicator). The RSSI value is a one byte value (0 to 255), the higher the value the better the signal strength (according to the IEEE 802.11 standard).

The actual RSSI value depends on numerous parameters:

- transponder type used,
- chip used in the transponder,
- connected antenna,
- transmit power,

- distance between antenna and transponder,
- reflections,
- noise level in the channel used and in neighboring channels

The RSSI value is important for the automatic evaluation of the read point and for filtering. A simple comparison of the RSSI values of two transponders is nevertheless not possible because the values are influenced by the transponder tolerances and the non-homogeneous antenna field. This means that it is possible that a transponder positioned closer to the RFID antenna has a lower RSSI value than a transponder much further away.

Propagation of the antenna field

The waves do not propagate as a homogeneous field, there is superposition of the waves that can cause the following effects:

- Overshoots and field gaps due to obliteration of two waves

  These are caused by reflection and the resulting propagation on different paths (comparable with fading effects on the car radio, e.g. noise when the vehicle is standing)
- Generation of overshoots due to reflecting objects and surfaces

This can be illustrated by comparing it with a "hall of mirrors". The signal transmitted by the reader is reflected (several times) by metallic objects such as housings, steel supports or grilles and this can lead to unwanted effects and read errors. Is also possible that a transponder is not identified although it is located in the assumed direct identification range of the reader. It can also happen that a transponder moving outside the antenna field is read out due to overshoots.

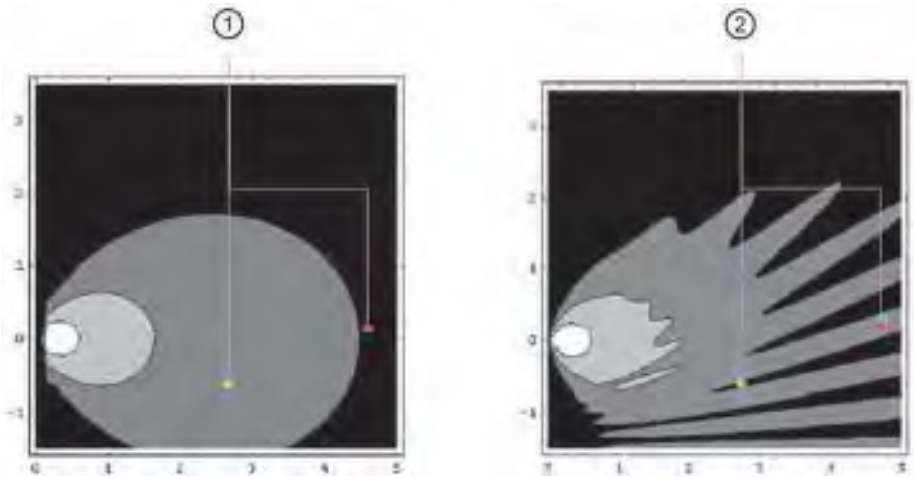

① Identification situation with two transponders in an ideal radio/antenna field

② Identification situation with two transponders in a real radio/antenna field with reflections that can lead to obliteration and overshoots

Figure 4-15 Propagation of UHF RFID antenna fields

Properties of the transmitting antenna

Depending on their design, UHF RFID antennas provide different properties. They differ in the polarization and antenna gain.

The direction of the electrical field component of an electromagnetic wave and the alignment of the antenna decide the polarization of the radiation. A distinction is made between linear and circular polarization of an antenna. With linear polarization you achieve the maximum write/read distances when the polarization axes of the antenna and transponder are parallel to each other. As the deviation increases, the received power deteriorates.

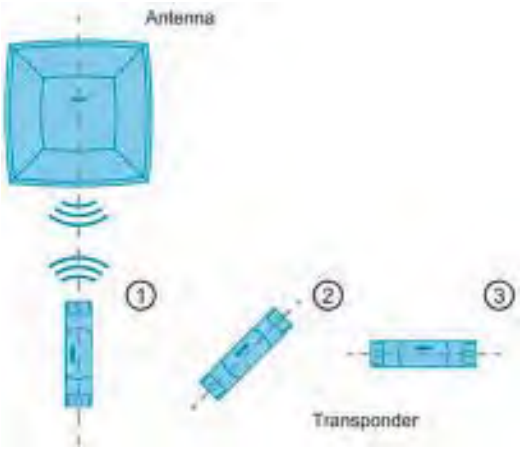

① Polarization axes parallel: approx. 100 % range
② Polarization axis turned through 45°: approx. 50% range
③ Polarization axis turned through 90°: approx. 10% range

Figure 4-16 Effect of the polarization axes on the write/read distance with linear antennas

Linear antennas can only be used if the alignment of the transponder is defined. On the other hand, one advantage of linear antennas is that they react less sensitively to reflections. This restriction does not apply with circular polarization. Circular antennas can also be used with differing alignments of the transponder and achieve constant results (e.g. RF680A or RF685R). It has been shown that with a defined transponder alignment, the linear antenna normally produces the best results.

4.7.2 Implementation of UHF RFID installations

The use of UHF RFID systems requires careful planning and preparation to avoid problems during commissioning and operation.

4.7.2.1 Preparation phase

Device selection

When selecting the suitable RFID hardware, remember the following minimum criteria:

- Integration in a control/IT environment
- Degree of protection
- Size of the identification range
- Type, number and position of the transponders in the antenna field
- Reflecting and absorbent materials in the vicinity of the antenna
- Distance between the antenna or the reader and the transponder

The following application examples illustrate the requirements for specific use cases and provide suitable solutions:

- Read point in a conveyor system in confined installation conditions:

  A container should be transported in a conveyor system. Information on the next transport section is contained in a transponder which is attached to the side of the container.

  Possible configuration: RF610R or possibly RF615R with integrated internal antenna and a compact, external antenna (e.g. RF615A, RF620A)
- RFID gate at the incoming goods / outgoing goods department:

  Several transponders are located on different packaging of products on a pallet. These need to be identified when passing through the RFID gate.

  Possible configuration: RF650R with four circular antennas (e.g. RF650A, RF660A depending on the required radiated power)
- Four read points along the production line:

  A product needs to be processed by different machines along the production line. The information for this is contained on a transponder attached to the product that must be read out at each machine.

  Possible configuration: RF680R with four antennas (e.g. RF615A, RF620A, RF680A)
- Read point on a production line with a predominantly metallic environment:

  A product needs to be processed by different machines along the production line. The information for this is contained on a transponder attached to the product that must be read out at each machine.

  Possible configuration: RF685R with integrated adaptive antenna

Dynamic identification

Dead spots cannot be excluded. To be able to compensate for dead spots, we recommend that you give preference to dynamic identification rather than static identification. Dynamic identification means that the transponders are read while they are moving (e.g. on the conveyor belt). If static identification is necessary, the antenna field can e virtually dynamized with the RF685R antenna or RF680A.

Triggering

To read out all right transponder data, you can have the readers perform permanent write/read actions or have specific write/read actions triggered. For the following reasons, we recommend that you trigger specific write/read actions:

- The RFID system only performs write/read actions when an object to be identified enters the antenna field. This reduces the number of process errors and they can be identified more quickly.
- Due to the fact that the various RFID systems only perform write/read actions when necessary, this reduces the possibility of antenna fields disrupting each other. This increases process reliability in plants, particularly when there is a high reader density.

Decoupling third-party RFID systems

If you are using different RFID systems, make sure that no two systems are active at the same time or operate separately from each other. Ideally there should be no mixed usage.

Training

Make sure that the engineers commissioning the UHF RFID systems are adequately trained.

4.7.2.2 Test phase

Metals and absorbent materials have a major influence on the functioning of UHF RFID systems. Since every environment has different conditions, we recommend that you run a test with all the objects to be identified for each read point. Include neighboring readers in these tests as well as scenarios for overshoots. Run through the tests an adequate number of times to make sure that any sporadically occurring influences on the antenna fields are also tested.

The final position of the transponder should only be decided after an adequately intensive test phase so that suitable variations can be tried out if errors occur.

4.7.2.3 Setting up read points

The read point setup described in this section is performed using the Web Based Management (WBM) and applies to the RF600 readers. You can find a detailed description of the WBM in the configuration manual "SIMATIC RF600 (https://support.industry.siemens.com/cs/ww/en/ps/15081/man)".

Adjust antennas

Follow the steps below to optimize the antenna alignment:

1. Position the object fitted with a transponder and to be identified at the required read point.
2. Align the reader or the antenna so that its front points in the direction of the object (transponder) to be identified.

   Keep to the minimum distances between antennas and transponders to avoid antenna errors.

   When using linear antennas, make sure the polarization direction is correct.
3. In the "Settings - Adjust antenna" menu item, select the connected antenna and click the "Start adjustment" button.

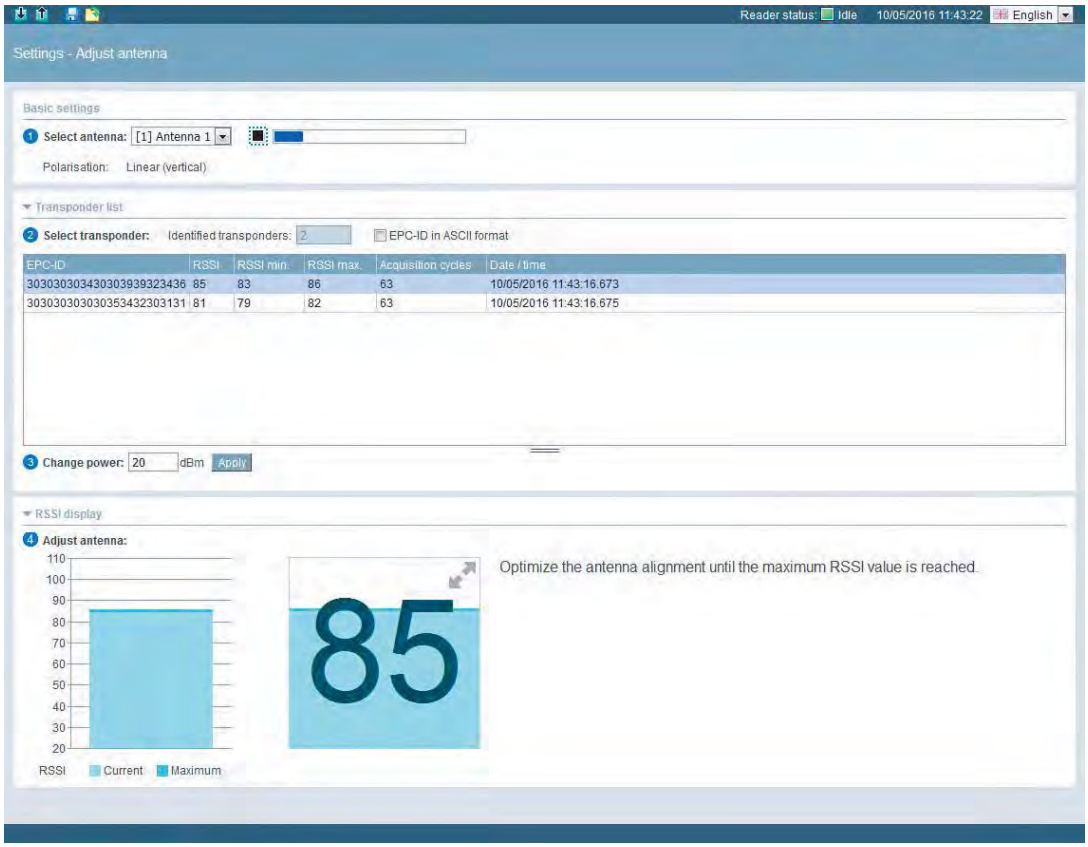

Figure 4-17 Optimizing the antenna alignment with the "Settings - Adjust antenna" menu item of the WBM

4. In the "RSSI display" area, you can see the current (light blue) and maximum reached (dark blue) RSSI values.

   Note

   Transponder is not identified

   If no transponder is identified, first increase the radiated power as described in the following section. Then repeat the antenna adjustment.

   Also check the polarization of your antenna. If the transponder always has the same alignment, the antenna polarization should be adapted accordingly. If the transponder moves or the alignment of the transponder varies, it is advisable to combine several antenna polarization types or to select a circular polarization.

5. Optimize the antenna adjustment until the maximum possible RSSI value is reached.
6. Secure the antenna.

Note that the RSSI value depends on the following components:

- transponder used,
- antenna used,
- Polarization,
- reflecting and absorbent materials in the vicinity of the antenna.

Radiated power

Using the "Settings - Read points" menu item of the WBM, you can set the radiated power. Select the radiated power so that the required transponders can be identified reliably but without overreach. In this case, the following applies: "as much as necessary, as little as possible".

In the "Settings - Activation power" menu item, you can find the optimum radiated power for reliable transponder access.

Detect activation power

Follow the steps below to detect the activation power:

1. In the "Settings - Activation power" menu item, select the connected antenna and click the "Start measurement" button.
2. In the "Min. power" column of the transponder list, you can see the required activation power. The value "Min. power" of the transponder last selected in the transponder list is automatically transferred to the "Accept power" box with 2 dB added.

Note

Optimizing the radiated power

The value entered automatically in the "Accept power" box corresponds to the minimum value with which the transponder was identified by the antenna (Min. power) plus a power reserve of 2 dB. This value serves as a guideline and you can adapt it. To be sure that the antenna reliably detects the transponders regularly, we recommend that you accept the automatically adapted default value.

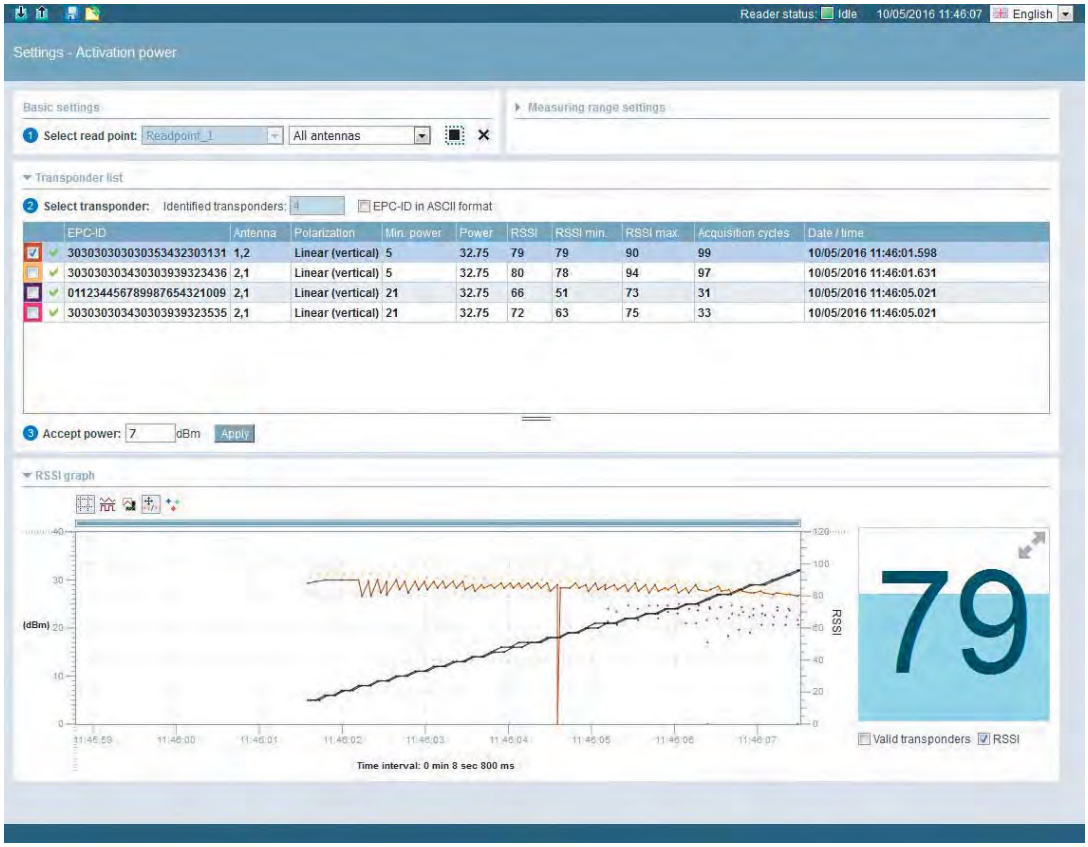

Figure 4-18 Determining the activation power using the "Settings - Activation power" menu item

3. Click the "Apply" button to transfer the value entered in the "Radiated power" input box of the "Settings - Read points" menu item.
4. Click the symbol to transfer the configuration to the reader.

4.7.3 Dealing with field disturbances

4.7.3.1 Types and approaches to solutions

The superposition of radio waves and reflection by conductive materials (in particular metal) can lead to weakening or strengthening of the antenna field at certain points in space. These effects can lead to disruptions when identifying RFID transponders that can be distinguished as follows:

- Overshoots due to increasing field strength: Transponders are detected that are actually beyond the read distance.

  Approaches to solutions:

  - Reduction of the radiated power
  - Determining the input attenuation
  - Use of UHF algorithms
  - Changing the antenna position
  - Shielding measures
  - Varying the antenna polarization
  - Use antennas with a lower gain
  - Use antennas with adjustable polarization
- Lack of separation of transponders: Transponders positioned close together are detected together although the application logic requires individual detection (for example to determine the positioning order). All transponders are within the read distance.

  Approaches to solutions:

  - Reduction of the radiated power
  - Use of UHF algorithms
  - Changing the antenna position
  - Shielding measures
  - Use antennas with a lower gain
- Field obliteration: Due to the superposition of waves, obliteration effects occur within the read distance.

  Approaches to solutions:

  - Varying the antenna polarization
  - Using additional antennas
  - Use of UHF algorithms
  - Changing the antenna position
  - Shielding measures
  - Use antennas with a lower gain

- Reader ↔ reader influence: Several readers influence or disturb each other during transponder identification.

  Approaches to solutions:

  – "Interconnect" neighboring readers so that they do not send at the same time
  – Enable intermissions ("Settings - General" menu item)
  – Channel management

- Reader ↔ transponder influence: A reader communicates with a transponder that is also in the identification area of another reader.

  Solution approaches:

  – "Interconnect" neighboring readers so that they do not send at the same time

- Other sources of disturbances that can lead to restriction of transponder identification.

  Other sources of disturbances can occur if there are devices with similar frequency bands (for example 900 MHz) in the vicinity of the reader. The diagnostics corresponds to the influence of one reader on another. Mobile phones can also disturb identification. This is the case if a reader of the type FCC or CMIIT is operated in Europe.

  Solution approaches:

  – The disturbances can be eliminated by temporarily turning off the suspected source of interference or its shielding. Interference can also occur with devices in other frequency bands if these are located in the immediate vicinity of the RFID antenna (e.g. DECT telephone directly in front of the RFID antenna). Common industrial interference mechanisms, such as the harmonics of frequency converters or static discharge (ESD) can also cause disturbances.

Note

Occurrence of disturbances

Remember that these disturbances can also occur sporadically or in certain combinations.

4.7.3.2 Measures for eliminating field disturbances

Using shields

To avoid reflections, you can fit UHF absorbent material. To do this, the absorbent material is mounted at various suspected reflection points until the field disturbance no longer occurs. Where possible, avoid the use of metal structures (for example housings) and use plastic instead.

Even with reader-to-reader influence, you can use absorbent plates or shielding sheets.

Channel management

To operate the readers, depending on the country profile, you have between four and fifty send channels available. Ideally, you should make the channel assignments manually in STEP 7 Basic / Professional (TIA Portal) or in the WBM. This allows you to reduce reader-to reader influence and if applicable field obliteration.

Table 4- 10 Example of a channel plan according to ETSI

Reader	Reader 1	Reader 2	Reader 3	Reader 4	Reader 5	...
Transmission channel	4	10	7	13	4	...
Frequency (MHz)	865.7	866.9	866.3	867.5	865.7	...

Use of multiple antennas

If you do not find the ideal antenna position to be able to identify the transponders in the various positions and alignments, you have the option of using more antennas. Multiple antennas mounted at different positions enlarge the identification range.

Enabling send pauses

If too many neighboring readers send at the same time, this causes overload of the radio channels. In this case, enable the "Intermissions" function in the "Settings - General" menu item to improve read reliability.

Varying the antenna polarization

By using linear or circular antennas, you can reduce field obliteration. This improves the reader reliability in difficult radio conditions.

The RF685R and RF680 readers also provide the option of operating the internal or external antenna both as a linear, vertical, linear horizontal and circular antenna. If more than one polarization is enabled, the polarization is changed automatically with each inventory. This increases the probability of identification in difficult radio conditions.

Changing the antenna position

In difficult radio conditions (e.g. where there is a lot of metal) it is possible that the communication between transponders and readers is impaired. You can counter this by changing the position of the antenna relative to the transponder. This also changes the multipath propagation of the radio waves and obliteration is reduced or shifted.

Use of UHF algorithms

In the "Settings - Read points" menu item of the WBM, you will find various "Tools" in the "Algorithms" area that you can use to improve the read/write reliability.

4.8 Chemical resistance of the readers and transponders

4.8.1 Readers

4.8.1.1 Overview of the readers and their housing materials

Resistance to chemicals depends on the housing materials used to manufacture the reader. The following table provides you with an overview of the housing materials that are used with the RF600 readers:

Individual part of the reader	Housing material of the reader
Top cover	Pocan CF2200; The chemical resistance of this plastic is listed in section "CF2200".
Bottom cover	• RF610R/RF615R: Pocan CF2200 • RF650R/RF680R/RF685R: Aluminum
Fiber-optic cable	Makrolon®2405
Decorative membrane [1)]	Autotex V200
Socket [1)]	Brass (copper alloy) CuZn40Pb2

[1)] Non-relevant component for resistance of complete housing

In case of questions please contact Siemens Support (section "Service & support (Page 506)").

4.8.1.2 Pocan CF2200

The following table provides an overview of the chemical resistance of the Pocan CF2200.

Table 4- 11 Resistance to chemicals - Pocan CF2200

Substance	Test conditions		Evaluation
	Concentration [%]	Temperature [°C]	
Alcohols			
Ethyl alcohol	-	-	++++
Isopropyl alcohol	-	-	++++
Phenol	-	-	○
Glycol	-	-	++++
Glycerine	-	-	++++
Alkalis			
Sodium hydroxide	10%	-	○
Ammonia solution	Diluted	-	++++
Halogens			
Bromine	-	-	○
Chlorine	-	-	○
Ketones			
Acetone	-	-	++
Methyl ethyl ketone (MEK)	-	-	++++
General silicone oils	-	-	++++
Hydrocarbons			
n-hexane	-	-	++++
Gasoline, super (aromatic contents)	-	-	++++
Heating oil	-	-	++++
Benzine (aromatic contents)	-	-	++++
Benzene	-	-	++++
Naphthalene	-	-	++++
Nitrobenzene	-	-	++++
Toluene	-	-	++++
Oils, greases			
Soya oil	-	-	++++
Olive oil	-	-	++++
Butter	-	-	++++
Motor oils HD, hydraulic oils	-	-	++++
Gearbox oils (mild-blend)	-	-	++++
Lubricating greases (roller bearing greases DIN 51825)	-	-	++++
Lubricating greases (basis: ester oils, diester oils, phosphate ester, synthetic oil)	-	-	++++

Substance	Test conditions		Evaluation
	Concentration [%]	Temperature [°C]	
Cleaning products			
Curd soap	-	-	++++
Detergent	-	-	++++
Cleaning products	-	-	++++
Salt solutions			
Sodium hypochloride	-	-	○
Sea water	-	-	++++
Acids			
Hydrochloric acid	20 %	-	++
Nitric acid	2%	-	++++
Phosphoric acid	30%	-	○
Sulfuric acid	2%	-	++++
	80%	-	○
Lactic acid	10%	-	++++
Acetic acid	10%	-	++++
Oleic acid	-	-	++++
Silicone oils			
General silicone oils	-	-	++++
Other substances			
Diethyl ether	-	-	++++
Urea	-	-	++++
Trichlorethylene	-	-	○
Nitrobenzene	-	-	++++
Hydrogen peroxide	30%	-	++++

Explanation of the rating	
++++	Resistant
+++	Practically resistant
++	Conditionally resistant
+	Less resistant
○	Not resistant
conc.	Concentrated solution
w.	Water solution
c. s.	Cold saturated

4.8.2 Transponder

4.8.2.1 Overview of the transponders and their housing materials

The following sections describe the resistance to chemicals of the various transponders. Resistance to chemicals depends on the housing materials used to manufacture the transponders.

The following table provides an overview of the housing materials of the transponders:

Table 4- 12 Overview of the housing materials of the transponders

Housing material	Transponder
Acrylonitrile/butadiene/styrene (ABS)	RF645T
Polyamide 12 (PA12)	RF640T
Polyamide 6.6 (PA 6.6)	RF625T
Polyamide 6.6 GF (PA 6.6 GF)	RF630T
Polyethylene terephthalate (PET)	RF640L RF690L
Polypropylene (PP)	RF620T
Polyphenylene sulfide (PPS)	RF680T RF682T
Polyvinyl chloride (PVC)	RF610T RF610T ATEX

Note

Chemical substances not listed

The following sections describe the chemical resistance of the various transponders to specific substances. If you require information about chemical substances that are not listed, contact Customer Support.

4.8.2.2 Acrylonitrile/butadiene/styrene (ABS)

The following table provides an overview of the chemical resistance of the transponder made of acrylonitrile/butadiene/styrene (ABS).

Table 4- 13 Resistance to chemicals - ABS

Substance	Test conditions		Evaluation
	Concentration [%]	Temperature [°C]	
Acetone	-	-	++
Alcohols	-	-	++
Gasoline	-	-	++++
Aliphatic hydrocarbons	-	-	++++

Substance	Test conditions		Evaluation
	Concentration [%]	Temperature [°C]	
Aromatic hydrocarbons	-	-	○
Weak alkaline solutions	-	-	++++
Strong alkaline solutions	-	-	++++
Weak mineral acids	-	-	++++
Strong mineral acids	-	-	○
Perchloroethylene	-	-	++
Mineral lubricants	-	-	++++
Oxidizing acids	-	-	○
Weak organic acids	-	-	++++
Strong organic acids	-	-	++
Trichloroethylene	-	-	○
UV light and weathering	-	-	++
Hot water (hydrolysis resistance)	-	-	++++

Explanation of the rating	
++++	Resistant
+++	Practically resistant
++	Conditionally resistant
+	Less resistant
○	Not resistant

4.8.2.3 Polyamide 12 (PA12)

The following table provides an overview of the chemical resistance of the transponder made of polyamide 12. The resistance of the plastic housing to chemicals used in the automobile sector (e.g.: oils, greases, diesel fuel, gasoline, etc,) is not listed extra.

Table 4- 14 Chemical resistance - Polyamide 12

Substance	Test conditions		Evaluation
	Concentration [%]	Temperature [°C]	
Battery acid	30 %	20 °C	++
Ammonia, gaseous	-	60 °C	++++
Ammonia, w.	conc.	60 °C	++++
	10 %	60 °C	++++
Benzene	-	20 °C	++++
	-	60 °C	+++
Bleach solution (12.5% effective chlorine)	-	20 °C	++
Butane, gas, liquid	-	60 °C	++++
Butyl acetate (acetic acid butyl ester)	-	60 °C	++++

Substance	Test conditions		Evaluation
	Concentration [%]	Temperature [°C]	
n(n)	-	20 °C	++++
	-	60 °C	+++
Calcium chloride, w.	-	20 °C	++++
	-	60 °C	+++
Calcium nitrate, w.	c. s.	20 °C	++++
	c. s.	60 °C	+++
Chlorine	-	20 °C	○
Chrome baths, tech.	-	20 °C	○
Iron salts, w.	c. s.	60 °C	++++
Acetic acid, w.	50 %	20 °C	○
Ethyl alcohol, w., undenaturated	95 %	20 °C	++++
	95 %	60 °C	+++
	50 %	60 °C	++++
Formaldehyde, w.	30 %	20 °C	+++
	10 %	20 °C	++++
	10 %	60 °C	+++
FORMALIN	-	20 °C	+++
Glycerine	-	60 °C	++++
Isopropanol	-	20 °C	++++
	-	60 °C	+++
Potassium hydroxide, w.	50 %	60 °C	++++
LYSOL	-	20 °C	++
Magnesium salts, w.	c. s.	60 °C	++++
Methyl alcohol, w.	50 %	60 °C	++++
Lactic acid, w.	50 %	20 °C	++
	10 %	20 °C	+++
	10 %	60 °C	++
Sodium carbonate, w. (soda)	c. s.	60 °C	++++
Sodium chloride, w.	c. s.	60 °C	++++
Sodium hydroxide	-	60 °C	++++
Nickel salts, w.	c. s.	60 °C	++++
Nitrobenzene	-	20 °C	+++
	-	60 °C	++
Phosphoric acid	10 %	20 °C	+
Propane	-	60 °C	++++
Mercury	-	60 °C	++++
Nitric acid	10 %	20 °C	+
Hydrochloric acid	10 %	20 °C	+
Sulfur dioxide	low	60 °C	++++
Sulfuric acid	25 %	20 °C	++
	10 %	20 °C	+++

Substance	Test conditions		Evaluation
	Concentration [%]	Temperature [°C]	
Hydrogen sulfide	low	60 °C	++++
Carbon tetrachloride	-	60 °C	++++
Toluene	-	20 °C	++++
	-	60 °C	+++
Detergent	high	60 °C	++++
Plasticizer	-	60 °C	++++

Explanation of the rating	
++++	Resistant
+++	Practically resistant
++	Conditionally resistant
+	Less resistant
○	Not resistant
w.	Water solution
c. s.	Cold saturated

4.8.2.4 Polyamide 6.6 (PA 6.6)

The following table provides an overview of the chemical resistance of the transponder made of polyamide 6.6 (PA 6.6). It must be emphasized that the plastic housing is extremely resistant to chemicals in automobiles (e.g.: oil, grease, diesel fuel, gasoline, ...) which are not listed separately.

Table 4- 15 Resistance to chemicals - PA 6.6

Substance	Test conditions		Evaluation
	Concentration [%]	Temperature [°C]	
Acetone	-	-	++++
Alcohols	-	-	++++
Gasoline	-	-	++++
Aliphatic hydrocarbons	-	-	++++
Aromatic hydrocarbons	-	-	++++
Weak alkaline solutions	-	-	++
Strong alkaline solutions	-	-	○
Weak mineral acids	-	-	+++
Strong mineral acids	-	-	○
Perchloroethylene	-	-	++++
Mineral lubricants	-	-	++++
Oxidizing acids	-	-	○
Weak organic acids	-	-	++
Strong organic acids	-	-	○

Substance	Test conditions		Evaluation
	Concentration [%]	Temperature [°C]	
Trichloroethylene	-	-	++++
Hot water (hydrolysis resistance)	-	-	++

Explanation of the rating	
++++	Resistant
+++	Practically resistant
++	Conditionally resistant
+	Less resistant
○	Not resistant

4.8.2.5 Polyamide 6.6 GF (PA 6.6 GF)

The following table provides an overview of the chemical resistance of the transponder made of polyamide 6.6 GF. Different values may apply to the stainless steel bolt head. It must be emphasized that the plastic housing is extremely resistant to chemicals in automobiles (e.g.: oil, grease, diesel fuel, gasoline, ...) which are not listed separately.

Table 4- 16 Resistance to chemicals - PA 6.6 GF

Substance	Test conditions		Evaluation
	Concentration [%]	Temperature [°C]	
Ammonia, w.	conc.	60 °C	++++
	20 %	60 °C	++++
Benzene	-	60 °C	++++
Bleach solution (12.5 % effective chlorine)	-	60 °C	○
Butane, gas, liquid	-	20 °C	++++ 1)
Butyl acetate (acetic acid butyl ester)	-	20 °C	++++ 1)
Calcium chloride, saturated 10 % solution	-	20 °C	++++
	-	60 °C	++
Chlorine	-	20 °C	○
Chrome baths, tech.	-	20 °C	○
Iron salts, w.	c. s.	20 °C	○
Acetic acid, w.	10 %	20 °C	++
	10 %	60 °C	○
Ethyl alcohol, w., undenaturated	40 %	20 °C	++++
Formaldehyde	30 %	20 °C	++++
FORMALIN	-	20 °C	++++
Glycerine	-	20 °C	++++
Isopropanol	-	60 °C	++++
Potassium hydroxide, w.	10 ... 15 %	20 °C	++

Substance	Test conditions		Evaluation
	Concentration [%]	Temperature [°C]	
Magnesium salts, w.	-	20 °C	++++ [1]
Methyl alcohol, w.	50 %	20 °C	++++
Lactic acid, w.	-	20 °C	++++
	-	60 °C	○
Sodium carbonate, w. (soda)	-	20 °C	++++
Sodium chloride, w.	-	20 °C	++
Sodium hydroxide	10	20 °C	++++
Nitrobenzene	-	20 °C	++ [1]
Phosphoric acid	10 %	20 °C	○
Propane	-	20 °C	++++
Nitric acid	10 %	20 °C	○
Hydrochloric acid	10 %	20 °C	○
Sulfur dioxide	low	20 °C	++
Sulfuric acid	25 %	20 °C	○
	10 %	20 °C	○
Hydrogen sulfide	dry	20 °C	++++
	dry	60 °C	○
Carbon tetrachloride	1 ... 4	20 °C	++++

[1] Nothing specified for stainless steel

Explanation of the rating	
++++	Resistant
+++	Practically resistant
++	Conditionally resistant
+	Less resistant
○	Not resistant
conc.	Concentrated solution
w.	Water solution
c. s.	Cold saturated

4.8.2.6 Polyethylene terephthalate (PET)

The following table provides an overview of the chemical resistance of the transponder made of polyethylene terephthalate.

Table 4- 17 Chemical resistance - polyethylene terephthalate

Substance	Test conditions		Evaluation
	Concentration [%]	Temperature [°C]	
Acetone	100 %	20 °C	++++
	60 %	60 °C	○
Formic acid	10 %	20 °C	++++
	10 %	60 °C	○
	95 %	20 °C	+
Ammonium hydroxide	10 %	20 °C	○
Gasoline (normal)	-	80 °C	++++
Gasoline (super)	-	60 °C	++++
Benzene	100 %	20 °C	++++
Chlorobenzene	100 %	20 °C	++++
Chloroform	10 %	20 °C	○
Citric acid	100 %	20 °C	++++
Cyclohexane	100 %	20 °C	++++
Diethyl ether	100 %	20 °C	++++
Dimethyl formamide	100 %	20 °C	++++
Dioxane	100 %	20 °C	++++
	100 %	60 °C	○
Acetic acid	conc.	20 °C	++++
	conc.	60 °C	++
	conc.	80 °C	○
	10 %	20 °C	++++
Ethanol	96 %	20 °C	++++
Hydrofluoric acid	50 %	20 °C	○
	5 %	20 °C	++++
Formaldehyde	30 %	20 °C	++++
Freon 11	-	20 °C	++++
Fruit juices	-	20 °C	++++
Glycerine	-	60 °C	++++
Heptane	100 %	20 °C	++++
Potassium dichromate	10 %	20 °C	++++
Potassium permanganate	10 %	20 °C	++++
Copper sulfate	10 %	20 °C	++++
Methanol	100 %	20 °C	++++
Methyl ethyl ketone	100 %	20 °C	++++
Milk	-	20 °C	++++

Substance	Test conditions		Evaluation
	Concentration [%]	Temperature [°C]	
Lactic acid	10 %	20 °C	++++
Sodium chloride	10 %	80 °C	++++
Antichlor	10 %	20 °C	++++
Paraffin oil	-	60 °C	++++
Perchloroethylene	100 %	20 °C	++++
Petroleum	-	80 °C	++++
Phenol	30 %	20 °C	++
Propanol	diluted	20 °C	++++
Nitric acid	40 %	20 °C	○
	36 %	20 °C	○
Hydrochloric acid	100 %	20 °C	++++
Carbon disulfide	98 %	20 °C	++++
Sulfuric acid	30 %	20 °C	○
	5 %	60 °C	++++
	diluted	80 °C	++++
Hydrogen sulfide	10 %	20 °C	++++
Silicon oil	-	80 °C	++++
Edible fat	-	80 °C	++++
Cooking oil	100 %	80 °C	++++
Carbon tetrachloride	100 %	23	++++
Toluene	-	20 °C	++++
Water	-	20 °C	++++
Hydrogen peroxide	5 %	20 °C	++++
	5 %	20 °C	++++
Xylene	10 %	20 °C	++++
Zinc chloride	-	20 °C	++++

Explanation of the rating	
++++	Resistant
+++	Practically resistant
++	Conditionally resistant
+	Less resistant
○	Not resistant
conc.	Concentrated solution

4.8.2.7 Polypropylene (PP)

The following table provides an overview of the chemical resistance of the transponder made of polyethylene terephthalate.

Table 4- 18 Chemical resistance - polypropylene

Substance	Test conditions		Evaluation
	Concentration [%]	Temperature [°C]	
Emissions alkaline/containing hydrogen fluoride /carbon dioxide	low	50 °C	++++
Emissions containing hydrochloric acid	-	50 °C	++++
Emissions containing sulfuric acid	-	20 °C	++++
	-	50 °C	○
Battery acid	38 %	50 °C	++++
Aluminum acetate, w.	-	50 °C	++++
Aluminum chloride	10 %	50 °C	++++
Aluminum nitrate, w.	-	50 °C	++++
Aluminum salts	-	50 °C	++++
Formic acid	50 %	20 °C	++++
	50 %	50 °C	○
Aminoacetic acid (glycocoll, glycine)	10 %	50 °C	++++
Ammonia, gaseous	-	50 °C	++++
Ammonia	25 %	50 °C	++++
Ammonia, w.	conc.	50 °C	++++
	10 %	50 °C	++++
Arsenic acid, w.	-	50 °C	++++
Ascorbic acid, w.	-	50 °C	++++
Gasoline	-	20 °C	○
Benzene	-	20 °C	○
Prussic acid, w.	-	50 °C	++++
Sodium hypochlorite solution	diluted / 20 %	20 °C	++++
	diluted / 20 %	50 °C	++
	50 %	50 °C	++
Borax	-	50 °C	++++
Boric acid, w.	10 %	50 °C	++++
Brake fluid	-	50 °C	++++
Bromine	-	20 °C	○
Butane, gas, liquid	technically clean	50 °C	++++
Butyl acetate (acetic acid butyl ester)	-	20 °C	++
	-	50 °C	○

Substance	Test conditions		Evaluation
	Concentration [%]	Temperature [°C]	
Calcium chloride, w./ alcoholic	-	20 °C	++++
	-	50 °C	+++
Calcium chloride,	-	50 °C	++++
Calcium nitrate, w.	-	50 °C	++++
	50 %	50 °C	++++
Chlorine	-	20 °C	○
Chloroacetic acid	-	50 °C	++++
Chloric acid	20 %	20 °C	++++
	20 %	50 °C	○
Chrome baths, tech.	-	20 °C	○
Chromium salts	-	50 °C	++++
Chromic acid	10 %	50 °C	++++
	20 / 50	50 °C	++
Chromosulfuric acid	conc.	20 °C	○
Citric acid	10 %	50 °C	++++
Diesel fuel	-	20 °C	++++
Diesel oil	100 %	20 °C	++++
Diglycole acid	30 %	50 °C	++++
Iron salts, w.	c. s.	50 °C	++++
Vinegar	-	50 °C	++++
Acetic acid	5 / 50	50 °C	++++
Ethanol	50 / 96	50 °C	++++
Ethyl alcohol	96 / 40	50 °C	++++
Fluoride	-	50 °C	++++
Formaldehyde	10 %	50 °C	++++
	40 %	50 °C	+++
Formaldehyde solution	30 %	50 °C	++++
Glycerine	any	50 °C	++++
Glycol	-	50 °C	++++
Uric acid	-	20 °C	++++
HD oil, motor oil, without aromatic compounds	-	20 °C	++++
Heating oil	-	20 °C	++++
Isopropanol	technically clean	50 °C	++++
Potassium hydroxide, w.	-	50 °C	++++
Potassium hydroxide	10 / 50	50 °C	++++
Silicic acid	any	50 °C	++++
Common salt	-	50 °C	++++
Carbonic acid	saturated	50 °C	++++
LYSOL	-	50 °C	++
Magnesium salts, w.	c. s.	50 °C	++++

Substance	Test conditions		Evaluation
	Concentration [%]	Temperature [°C]	
Magnesium salts	any	50 °C	++++
Machine oil	100 %	20 °C	++++
Sea water	-	50 °C	++++
Methanol	-	50 °C	++++
Methyl alcohol, w.	50 %	50 °C	++++
Lactic acid, w.	-	50 °C	++++
Lactic acid	3 / 85	20 °C	++++
	3 / 85	50 °C	+++
	80 %	50 °C	++++
Engine oil	-	20 °C	++++
Sodium carbonate, w. (soda)	c. s.	50 °C	++++
Sodium carbonate	-	50 °C	++++
Sodium chloride, w.	c. s.	50 °C	++++
Sodium hydroxide, w.	-	50 °C	++++
Sodium hydroxide solution, w.	-	50 °C	++++
Sodium hydroxide solution	30 / 45 / 60	50 °C	++++
Nickel salts, w.	c. s.	50 °C	++++
Nickel salts	saturated	50 °C	++++
Nitrobenzene	-	20 °C	+++
	-	50 °C	++
Oxalic acid	-	50 °C	++++
Petroleum	technically clean	20 °C	++++
Phosphoric acid	1 ... 5 / 30	50 °C	++++
	85 %	50 °C	+++
Phosphoric acid, w	20 %	50 °C	++++
Propane	liquid	20 °C	++++
Propane	gaseous	20 °C	++
Mercury	pure	50 °C	++++
Crude oil	100 %	-	++
Ammonium chloride	100 %	50 °C	++++
Ammonium chloride, w.	-	50 °C	++++
Nitric acid	-	20 °C	○
	50 %	20 °C	++
	1 ... 10 %	50 °C	++++
Hydrochloric acid	1 ... 5 / 20	50 °C	++++
	35 %	20 °C	++++
	35 %	50 °C	+++
	conc.	50 °C	++++

Substance	Test conditions		Evaluation
	Concentration [%]	Temperature [°C]	
Sulfur dioxide	low	50 °C	++++
	moist	20 °C	++++
	moist	50 °C	++
	liquid	50 °C	○
Sulfuric acid	1 ... 6 / 40 / 80	50 °C	++++
	20 %	20 °C	++++
	20 %	50 °C	+++
	60 %	20 °C	++++
	60 %	50 °C	++
	95 %	20 °C	++
	95 %	50 °C	○
	fuming	20 °C	○
Hydrogen sulfide	low / saturated	50 °C	++++
Detergent	high	50 °C	++++
Water	-	50 °C	++++
Hydrogen	technically clean	50 °C	++++
Plasticizer	-	20 °C	++++
	-	50 °C	++

Explanation of the rating	
++++	Resistant
+++	Practically resistant
++	Conditionally resistant
+	Less resistant
○	Not resistant
conc.	Concentrated solution
w.	Water solution
c. s.	Cold saturated

4.8.2.8 Polyphenylene sulfide (PPS)

The following table provides an overview of the chemical resistance of the transponder made of polyphenylene sulfide (PPS). The transponder has special chemical resistance to solutions up to a temperature of 200 °C. A reduction in the mechanical properties has been observed in aqueous solutions of hydrochloric acid (HCl) and nitric acid (HNO3) at 80 °C. The plastic housings are resistant to all types of fuel including methanol.

Table 4- 19 Chemical resistance - polyphenylene sulfide (PPS)

Substance	Test conditions		Evaluation
	Concentration [%]	Temperature [°C]	
Acetone	-	55 °C	++++
n-butanol (butyl alcohol)	-	80 °C	++++
Butanone-2 (methyl ethyl ketone)	-	60 °C	++++
n-butyl acetate	-	80 °C	++++
Brake fluid	-	80 °C	++++
Calcium chloride (saturated)	-	80 °C	++++
Diesel fuel	-	80 °C	++++
Diethyl ether	-	23 °C	++++
Frigene 113	-	23 °C	++++
Anti-freeze	-	120 °C	++++
Kerosene	-	60 °C	++++
Methanol	-	60 °C	++++
Engine oil	-	80 °C	++++
Sodium chloride (saturated)	-	80 °C	++++
Sodium hydroxide	30 %	80 °C	++++
Sodium hypochlorite (30 or 180 days)	5 %	80 °C	++
	5 %	80 °C	-
Sodium hydroxide solution	30 %	90 °C	++++
Nitric acid	10 %	23 °C	++++
Hydrochloric acid	10 %	80 °C	-
Sulfuric acid	10 %	23 °C	++++
	10 %	80 °C	++
	30 %	23 °C	++++
Tested fuels	-	80 °C	++++
FAM testing fluid acc. to DIN 51 604-A Toluene	-	80 °C	++
1, 1, 1-Trichloroethane Xylene	-	80 °C	++++
Zinc chloride (saturated)	-	80 °C	++
	-	75 °C	++++

Explanation of the rating	
++++	Resistant
+++	Practically resistant
++	Conditionally resistant
+	Less resistant
○	Not resistant

4.8.2.9 Polyvinyl chloride (PVC)

The following table provides an overview of the chemical resistance of the transponder made of polyvinyl chloride (PVC).

Table 4- 20 Chemical resistance - polyvinyl chloride (PVC)

Substance	Test conditions		Evaluation
	Concentration [%]	Temperature [°C]	
Salt water	5 %	-	++++
Sugared water	10 %	-	++++
Acetic acid, w.	5 %	-	++++
Sodium carbonate, w.	5 %	-	++++
Ethyl alcohol, w.	60 %	-	++++
Ethylene glycol	50 %	-	++++
Fuel B (acc. to ISO 1817)	-	-	++++
Human sweat	-	-	++++

Explanation of the rating	
++++	Resistant
++++	Practically resistant
++	Conditionally resistant
+	Less resistant
○	Not resistant
w.	Water solution

4.9 Regulations applicable to frequency bands

Overview of the frequency bands

The frequency ranges are standardized by EPCglobal Inc. Since these are changed regularly, we recommend that you check the current country-specific frequency bands and approvals directly on the Internet page of EPCglobal®.

You will find the current country-specific frequency bands and approvals on the following Internet page:

EPCglobal (http://www.gs1.org/docs/epcglobal/UHF_Regulations.pdf)

You will find a list of all the country-specific approvals for SIMATIC RFID systems on the following Internet page:

Wireless approvals of SIMATIC RFID systems (http://www.siemens.com/rfid-approvals)

4.10 Guidelines for electromagnetic compatibility (EMC)

4.10.1 Overview

These EMC directives answer the following questions:

- Why are EMC directives necessary?
- What types of external interference have an impact on the system?
- How can interference be prevented?
- How can interference be eliminated?
- Examples of interference-free plant design

The description is aimed at "qualified personnel":

- Configuration engineers and planners who plan system configurations with RFID modules and have to observe the necessary guidelines.
- Installation and service engineers who install the connecting cables in accordance with this description or who rectify defects in this area in the event of interference.

Note

Observe the EMC directives

Failure to observe the specifically emphasized notes can result in dangerous conditions in the plant or the destruction of individual components or the entire plant.

4.10.2 What does EMC mean?

The increasing use of electrical and electronic devices is accompanied by:

- Higher component density
- More switched power electronics
- Increasing switching rates
- Lower power consumption of components due to steeper switching edges

The higher the degree of automation, the greater the risk of interaction between devices.

Electromagnetic compatibility (EMC) is the ability of an electrical or electronic device to operate satisfactorily in an electromagnetic environment without affecting or interfering with the environment over and above certain limits.

EMC can be broken down into three different areas:

- Internal immunity to interference:

  Immunity to internal (own) electrical disturbance
- External immunity to interference:

  Immunity to external electromagnetic disturbances
- Degree of interference emission:

  Emission of interference and its effect on the electrical environment

All three areas are considered when testing an electrical device.

The RFID modules are tested for conformity with the limit values required by the CE and RED directives. Since the RFID modules are merely components of an overall system, and sources of interference can arise as a result of combining different components, certain directives have to be followed when setting up a plant.

EMC measures usually consist of a complete package of measures, all of which need to be implemented in order to ensure that the plant is immune to interference.

Note

Adherence to EMC directives

The plant manufacturer is responsible for the observance of the EMC directives; the plant operator is responsible for radio interference suppression in the overall plant.

All measures taken when setting up the plant prevent expensive retrospective modifications and interference suppression measures.

The plant operator must comply with the locally applicable laws and regulations. They are not covered in this document.

4.10.3 Basic rules

It is often sufficient to follow a few elementary rules in order to ensure electromagnetic compatiblity (EMC).

The following rules must be observed:

Shielding by enclosure

- Protect the device against external interference by installing it in a cabinet or housing. The housing or enclosure must be connected to the chassis ground.
- Use metal plates to shield against electromagnetic fields generated by inductances.
- Use metal connector housings to shield data conductors.

Wide-area ground connection

- Plan a meshed grounding concept.
- Bond all passive metal parts to chassis ground, ensuring large-area and low-HF-impedance contact.
- Establish a large-area connection between the passive metal parts and the central grounding point.
- Don't forget to include the shielding bus in the chassis ground system. That means the actual shielding busbars must be connected to ground by large-area contact.
- Aluminium parts are not suitable for ground connections.

Plan the cable installation

- Break the cabling down into cable groups and install these separately.
- Always route power cables, signal cables and HF cables through separated ducts or in separate bundles.
- Feed the cabling into the cabinet from one side only and, if possible, on one level only.
- Route the signal cables as close as possible to chassis surfaces.
- Twist the feed and return conductors of separately installed cables.
- Routing HF cables:
  avoid parallel routing of HF cables.
- Do not route cables through the antenna field.

Shielding for the cables

- Shield the data cables and connect the shield at both ends.
- Shield the analog cables and connect the shield at one end, e.g. on the drive unit.
- Always apply large-area connections between the cable shields and the shielding bus at the cabinet inlet and make the contact with clamps.

- Feed the connected shield through to the module without interruption.
- Use braided shields, not foil shields.

Line and signal filter

- Use only line filters with metal housings
- Connect the filter housing to the cabinet chassis using a large-area low-HF-impedance connection.
- Never fix the filter housing to a painted surface.
- Fix the filter at the control cabinet inlet or in the direction of the source.

4.10.4 Propagation of electromagnetic interference

Three components have to be present for interference to occur in a system:

- Interference source
- Coupling path
- Interference sink

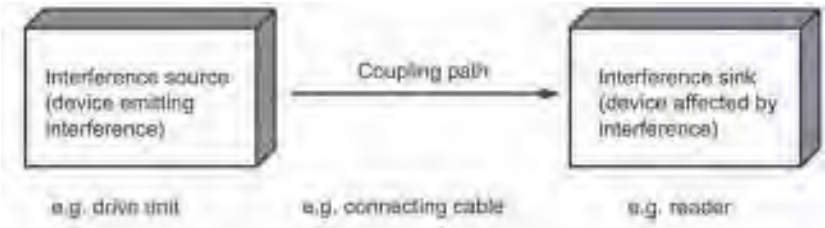

Figure 4-19 Propagation of interference

If one of the components is missing, e.g. the coupling path between the interference source and the interference sink, the interference sink is unaffected, even if the interference source is transmitting a high level of noise.

The EMC measures are applied to all three components, in order to prevent malfunctions due to interference. When setting up a plant, the manufacturer must take all possible measures in order to prevent the occurrence of interference sources:

- Only devices fulfilling limit class A of VDE 0871 may be used in a plant.
- Interference suppression measures must be introduced on all interference-emitting devices. This includes all coils and windings.
- The design of the system must be such that mutual interference between individual components is precluded or kept as small as possible.

Information and tips for plant design are given in the following sections.

Interference sources

In order to achieve a high level of electromagnetic compatibility and thus a very low level of disturbance in a plant, it is necessary to recognize the most frequent interference sources. These must then be eliminated by appropriate measures.

Table 4- 21 Interference sources: origin and effect

Interference source	Interference results from	Effect on the interference sink
Contactor, electronic valves	Contacts	System disturbances
	Coils	Magnetic field
Electrical motor	Collector	Electrical field
	Winding	Magnetic field
Electric welding device	Contacts	Electrical field
	Transformer	Magnetic field, system disturbance, transient currents
Power supply unit, switched-mode	Circuit	Electrical and magnetic field, system disturbance
High-frequency appliances	Circuit	Electromagnetic field
Transmitter (e.g. professional mobile radio)	Antenna	Electromagnetic field
Ground or reference potential difference	Voltage difference	Transient currents
Operator	Static charge	Electrical discharge currents, electrical field
Power cable	Current flow	Electrical and magnetic field, system disturbance
High-voltage cable	Voltage difference	Electrical field

What interference can affect RFID?

Table 4- 22 Interference sources: Causes and remedies

Interference source	Cause	Remedy
Switched-mode power supply	Interference emitted from the current infeed	Replace the power supply
Interference injected through the cables connected in series	Cable is inadequately shield-ed	Better cable shielding
	The reader is not connected to ground.	Ground the reader

Interference source	Cause	Remedy
HF interference over the antennas	caused by another reader	• Position the antennas further apart. • Erect suitable damping materials between the antennas. • Reduce the power of the readers. Please follow the instructions in the section *Installation guidelines/reducing the effects of metal*

4.10.5 Equipotential bonding

Potential differences between different parts of a plant can arise due to the different design of the plant components and different voltage levels. If the plant components are connected across signal cables, transient currents flow across the signal cables. These transient currents can corrupt the signals.

Proper equipotential bonding is thus essential.

- The equipotential bonding conductor must have a sufficiently large cross section (at least 10 mm^2).
- The distance between the signal cable and the associated equipotential bonding conductor must be as small as possible (antenna effect).
- A fine-strand conductor must be used (better high-frequency conductivity).
- When connecting the equipotential bonding conductors to the centralized equipotential bonding strip (EBS), the power components and non-power components must be combined.
- The equipotential bonding conductors of the separate modules must lead directly to the equipotential bonding strip.

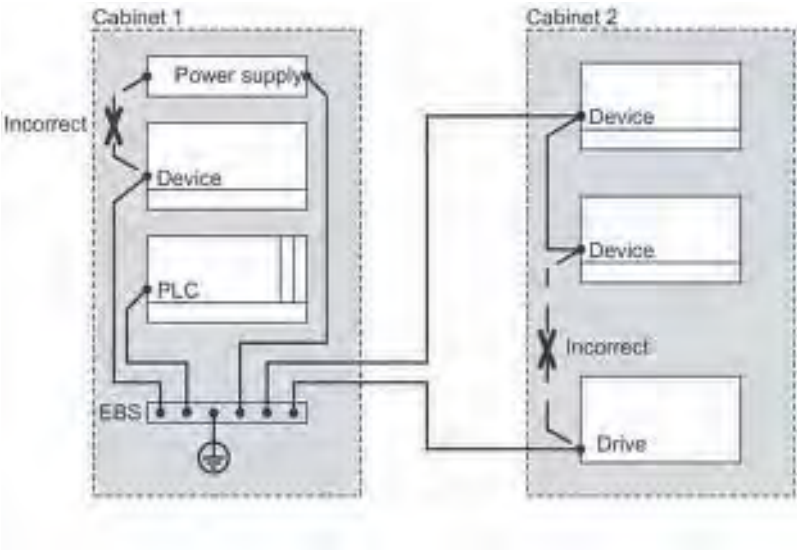

Figure 4-20 Equipotential bonding (EBS = Equipotential bonding strip)

The better the equipotential bonding in a plant, the smaller the chance of interference due to fluctuations in potential.

Equipotential bonding should not be confused with protective earthing of a plant. Protective earthing prevents the occurrence of excessive contact voltages in the event of equipment faults whereas equipotential bonding prevents the occurrence of differences in potential.

4.10.6 Cable shielding

Signal cables must be shielded in order to prevent coupling of interference.

The best shielding is achieved by installing the cables in steel tubes. However, this is only necessary if the signal cable is routed through an environment prone to particular interference. It is usually adequate to use cables with braided shields. In either case, however, correct connection is vital for effective shielding.

The following generally applies:

- For analog signal cables, the shield has to be connected at one end on the receiver side
- For digital signals, the shield has to be connected to the enclosure at both ends
- Since interference signals are frequently within the HF range (> 10 kHz), a large-area HF-proof shield contact is necessary

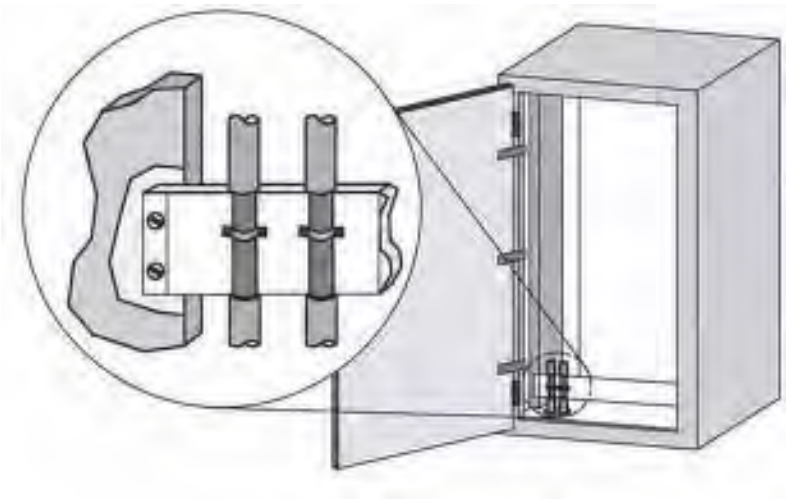

Figure 4-21 Cable shielding

The shielding bus should be connected to the control cabinet enclosure in a manner allowing good conductance (large-area contact) and must be situated as close as possible to the cable inlet. The cable insulation must be removed and the cable clamped to the shielding bus (high-frequency clamp) or secured using cable ties. Care should be taken to ensure that the connection allows good conductance.

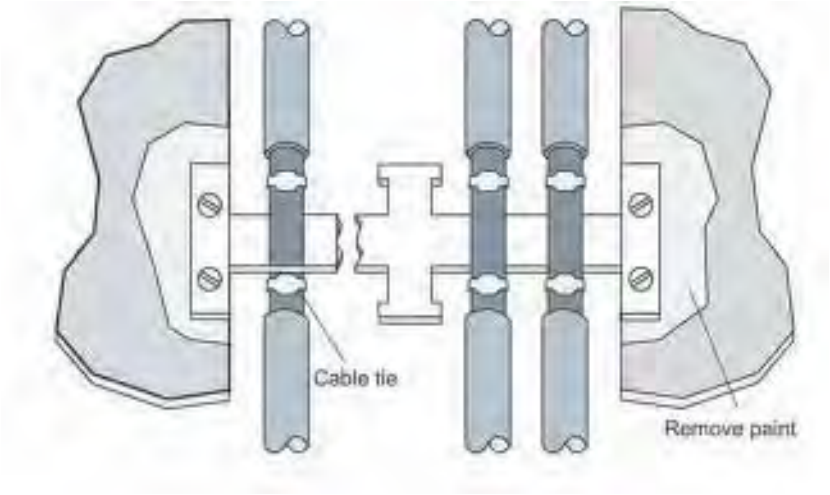

Figure 4-22 Connection of shielding bus

The shielding bus must be connected to the PE busbar.

If shielded cables have to be interrupted, the shield must be continued via the corresponding connector housing. Only suitable connectors may be used for this purpose.

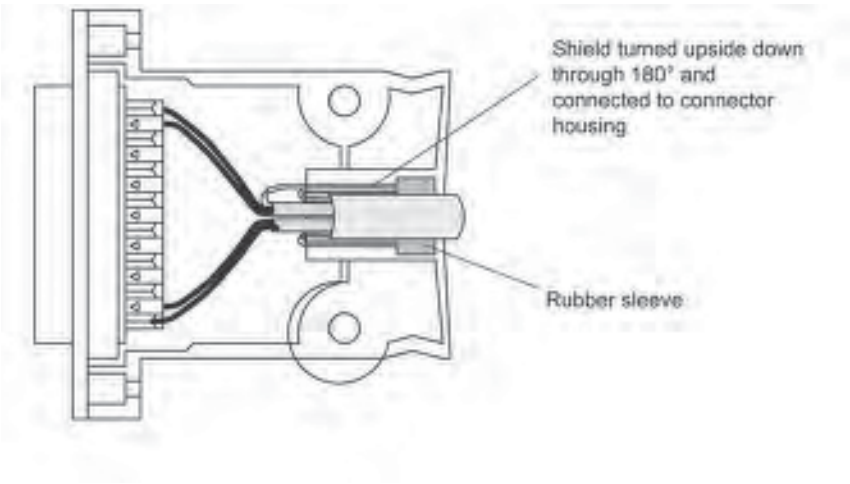

Figure 4-23 Interruption of shielded cables

If intermediate connectors, which do not have a suitable shield connection are used, the shield must be continued by fixing cable clamps at the point of interruption. This ensures a large-area, HF-conducting contact.

Readers

5

5.1 Overview

The following table shows the most important features of the stationary RF600 readers at a glance:

Table 5- 1 Characteristics of the readers

Characteristics	SIMATIC RF610R	SIMATIC RF615R	SIMATIC RF650R	SIMATIC RF680R	SIMATIC RF685R
Air interface / standards supported	ISO 18000-62 ISO 18000-63				
Radio profile variants	ETSI, FCC, CMIIT		ETSI, FCC, CMIIT, ARIB (STD-T107)	ETSI, FCC, CMIIT, ARIB (STD-T106)	
LEDs	7		6	17	
Interfaces					
Number of external antennas via RP-TNC	--	1	4		1
Available internal antennas	1		--		1
Ethernet	1 x M12 connector (4-pin)		1 x RJ45 connector (8-pin) according to IEC PAS 61076-3-117	2 x M12 connector (4-pin)	
PROFINET	✓		--	✓	
RS-422	1 x plug (M12, 8-pin) [1]		--	1 x plug (M12, 8-pin) [1]	
Digital inputs	--	1 x (M12, 5-pin) log "0": 0…7 V log "1": 15…24 V	4 x (M12, 12-pin) log "0": 0…7 V log "1": 15…24 V		
Digital outputs (short-circuit-proof)	--	1 x (M12, 5-pin)	4 x (M12, 12-pin)		
Power supply	24 V DC (M12, 8-pin) 20…30 V (0.3 A) external		24 V DC (M12, 8-pin) 20…30 V (2 A) external		

Characteristics	SIMATIC RF610R	SIMATIC RF615R	SIMATIC RF650R	SIMATIC RF680R	SIMATIC RF685R
Max. radiated power ETSI in ERP	200 mW ERP	200 mW ERP [2)] 1 W ERP	2 W ERP		2 W ERP [2)] 2 W ERP
Max. radiated power CMIIT in ERP	250 mW ERP	250 mW ERP [2)] 1 W ERP	2 W ERP		2 W ERP [2)] 2 W ERP
Max. radiated power FCC in EIRP	400 mW EIRP	400 mW EIRP [2)] 1.8 W EIRP	4 W EIRP		4 W EIRP [2)] 4 W EIRP
Max. radiated power ARIB in EIRP	--		0.5 W EIRP	4 W EIRP	
Max. transmit power ETSI and CMIIT [3)]	26 dBm 0.4 W		30 dBm 1 W	33 dBm 2 W	
Max. transmit power FCC [3)]	26 dBm 0.4 W		30 dBm 1 W	33 dBm 2 W	
Max. transmit power ARIB [3)]	--		24 dBm 0.25 W	30 dBm 1 W	
Max. transmission speed of the communications interface [4)]	100 Mbps or 115.2 kbps		100 Mbps	100 Mbps or 115.2 kbps	
Max. transmission speed reader ⇒ transponder	80 kbps				
Max transmission speed transponder ⇒ reader	400 kbps				

1) Connection of the readers to the ASM 456 communications module

2) Internal antenna

3) With a profile with a Tx transmission seed of 80 kbps (Tari = 12.5 us) the transmit power is 1 W.

4) A transmission speed of 10 Mbps is not supported.

Note

License requirement for ARIB STD-106 wireless profile

Note that the ARIB STD-106 wireless profile requires a license. When using the SIMATIC RF680R and RF685R readers in the ARIB STD-106 wireless profile, you need a valid license from the relevant authority.

5.2 SIMATIC RF610R

5.2.1 Description

5.2.1.1 Overview

The SIMATIC RF610R is a stationary reader in the UHF frequency band with an integrated antenna.

The maximum transmit power is 400 mW, the radiant power of the internal antenna is 200 or 250 mW ERP / 400 mW EIRP. The interfaces (Ethernet, power supply) are located on the lower front edge. These interfaces can be used to connect the reader to the power supply and a PC for parameter assignment.

The degree of protection is IP67.

	Pos.	Description
	①	"PRESENCE" LED (PRE)
	②	LED operating display
	③	Interface to power supply (RS422), 24 V DC [1]: X80 DC24V (M12, 8-pin)
	④	Ethernet interface, TCP/IP: X1 P1 (M12, 4-pin)

[1]) Connection of the readers to the ASM 456 communications module via the RS-422 interface.

5.2.1.2 Ordering data

Table 5- 2 RF610R ordering data

Product	Article number
RF610R (ETSI)	6GT2811-6BC10-0AA0
RF610R (FCC)	6GT2811-6BC10-1AA0
RF610R (CMIIT)	6GT2811-6BC10-2AA0

Table 5- 3 Ordering data accessories

Product			Article number
SIMATIC antenna holder for RF600 devices			6GT2890-2AB10
Connecting cable and connectors			
	• Ethernet plug on the reader FastConnect M12 (IP65)		6GK1901-0DB20-6AA0
	• Ethernet plug Standard IE FastConnect RJ45 180 (IP20)		6GK1901-1BB10-2AA0
	• Industrial Ethernet cable M12 / M12	5 m	6XV1870-8AH50
	• Industrial Ethernet connecting cable M12-180 / RJ45	2 m	6XV1871-5TH20
		3 m	6XV1871-5TH30
		5 m	6XV1871-5TH50
	• Industrial Ethernet cable by the meter, green (minimum 20 m)		6XV1840-2AH10
	• Connecting cable reader ↔ CM M12-180 / M12-180	2 m	6GT2891-4FH20
		5 m	6GT2891-4FH50
		10 m	6GT2891-4FN10
		20 m	6GT2891-4FN20
		50 m	6GT2891-4FN50
Wide-range power supply unit for SIMATIC RF systems			
	• With EU plug		6GT2898-0AC00
	• With UK plug		6GT2898-0AC10
	• With US plug		6GT2898-0AC20
24 V connecting cable reader ↔ wide-range power supply unit			
	with plug, 5 m		6GT2891-0PH50
	with open ends, 2 m		6GT2891-4EH20
	with open ends, 5 m		6GT2891-4EH50
DVD "Ident Systems Software & Documentation"			6GT2080-2AA20

5.2.1.3 Pin assignment of the power supply interface (X80 24VDC)

Table 5- 4 Pin assignment of the RS422 interface (reader end)

View of interface (M12 socket, 8-pin)	Pin	Wire colors	Assignment
	1	White	+ 24 V
	2 [1]	Brown	- Tx
	3	Green	0 V
	4 [1]	Yellow	+ Tx
	5 [1]	Gray	+ Rx
	6 [1]	Pink	- Rx
	7	--	Unassigned
	8	--	Earth (shield)

[1] These pins are not required if the reader is operated via Ethernet.

Note

Requirement for external power sources

The reader must only be supplied with power by power supply units that meet the requirements of LPS (Limited Power Source) and NEC Class 2.

Requirement for external power sources

The reader must only be supplied with power by power supply units that meet the requirementsof limited power source (LPS) and NEC Class 2.

Spécification des sources de tension externes

L'alimentation du plot de lecture/écriture doit être exclusivement assurée par des blocs d'alimentation conformes aux spécifications des sources à puissance limitée (Limited Power Sources LPS) et de NEC class 2.

Notes on connectors and cables

The cables with open cable ends (6GT2891-4EH20, 6GT2891-4EH50) have an 8-pin M12 plug at one end, while the other end of the cable is "open". There are 8 color-coded single wires there for connecting to external devices.

The product range includes additional cables of the type 6GT2891-4Fxxx (2 to 50 m) with an M12 connector at both ends. These cables can be used as extension cables. Long cables can be shortened if necessary.

NOTICE

Insulate unused single wires

Unused single wires must be insulated individually to prevent unwanted connections of signal lines.

NOTICE
For long cables: Adapt the power supply and transmission speed Note that even with long cables, the supply voltage of 24 VDC must always be guaranteed. Note also that the transmission speed on the serial interface must, if necessary, be reduced. SIMATIC standard cables (e.g. 6GT2891-4FN10) have a loop resistance of 160 mOhm / meter. This results in a voltage drop of 0.8 volts on the 24 V cable for every 10 meters of connecting cable and with a power requirement of 500 mA. If the power requirement increases through the use of the digital inputs/outputs, the voltage drop increases accordingly.

5.2.1.4 Pin assignment of the Industrial Ethernet interface (X1 P1)

Table 5- 5 Pin assignment of the Industrial Ethernet interface (reader end)

View of interface (M12 socket, 4-pin)	Pin	Pin assignment
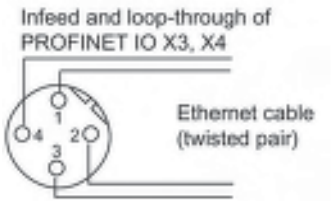	1	Data line +Tx
	2	Data line +Rx
	3	Data line -Tx
	4	Data line -Rx

5.2.1.5 Ground connection

Due to the potential-free design of the reader, no earthing measures are required.

5.2.2 Planning operation

5.2.2.1 Internal antenna

Minimum mounting clearances of two readers

RF610R has an internal circular antenna. To prevent the antenna fields from overlapping, always observe the recommended minimum distances between two readers as described in the section "Reciprocal influence of read points (Page 47)".

Dense Reader Mode (DRM)

The readers can also interfere with each other (secondary fields), if the channels (Reader TX, Transponder TX) overlap. In order to prevent a transponder channel overlapping with a reader channel, we recommend that the Dense Reader Mode (DRM) is used.

Note

Protective cap

If you only use the internal antenna of the reader, we recommend that you close the external, unused antenna connector on the reader using the protective cap.

Antenna diagram RF610R (ETSI)

The following radiation diagrams show the directional characteristics of the internal antenna of the RF610R (ETSI) reader. For the spatial presentation of the directional characteristics, the horizontal plane (azimuth section) as well as the vertical plane (elevation section) must be considered. This results in a spatial image of the directional radiation pattern of the antenna.

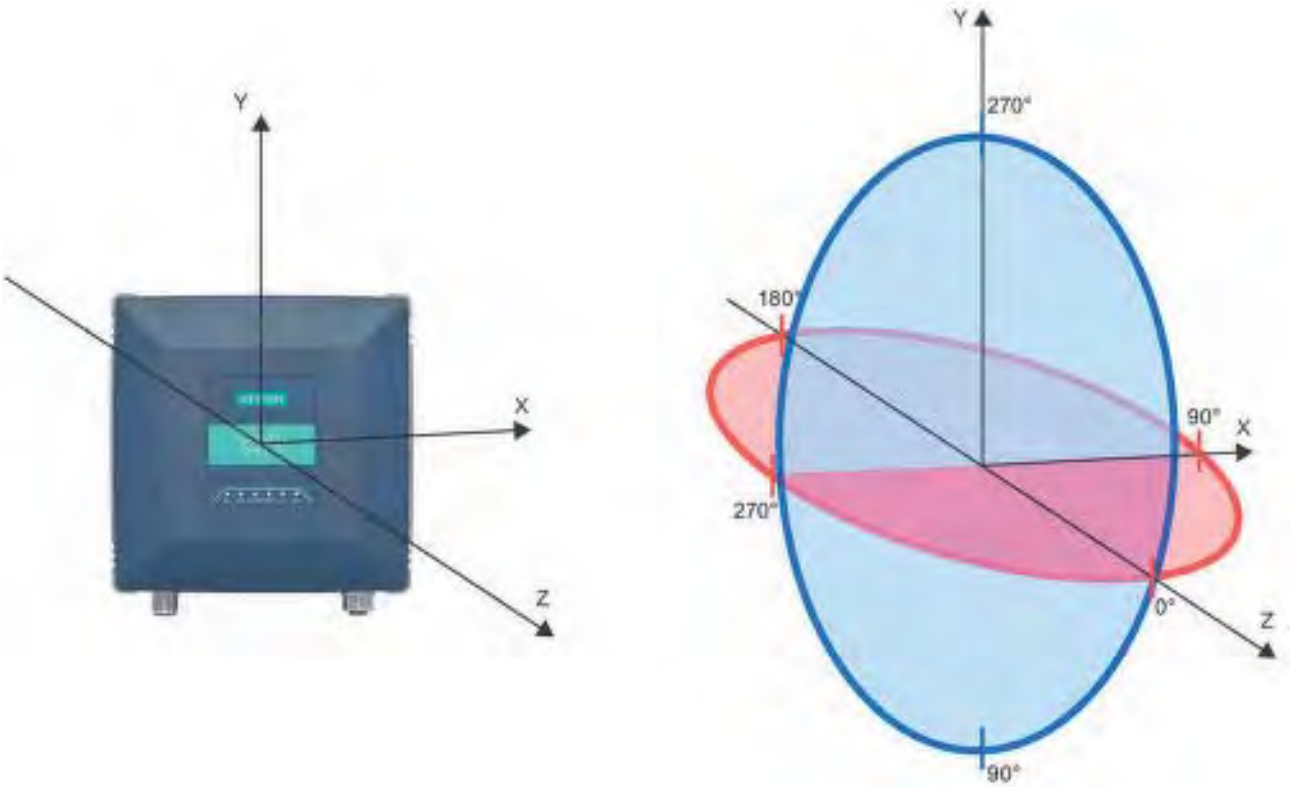

Figure 5-1 Reference system

Radiation diagram (ETSI)

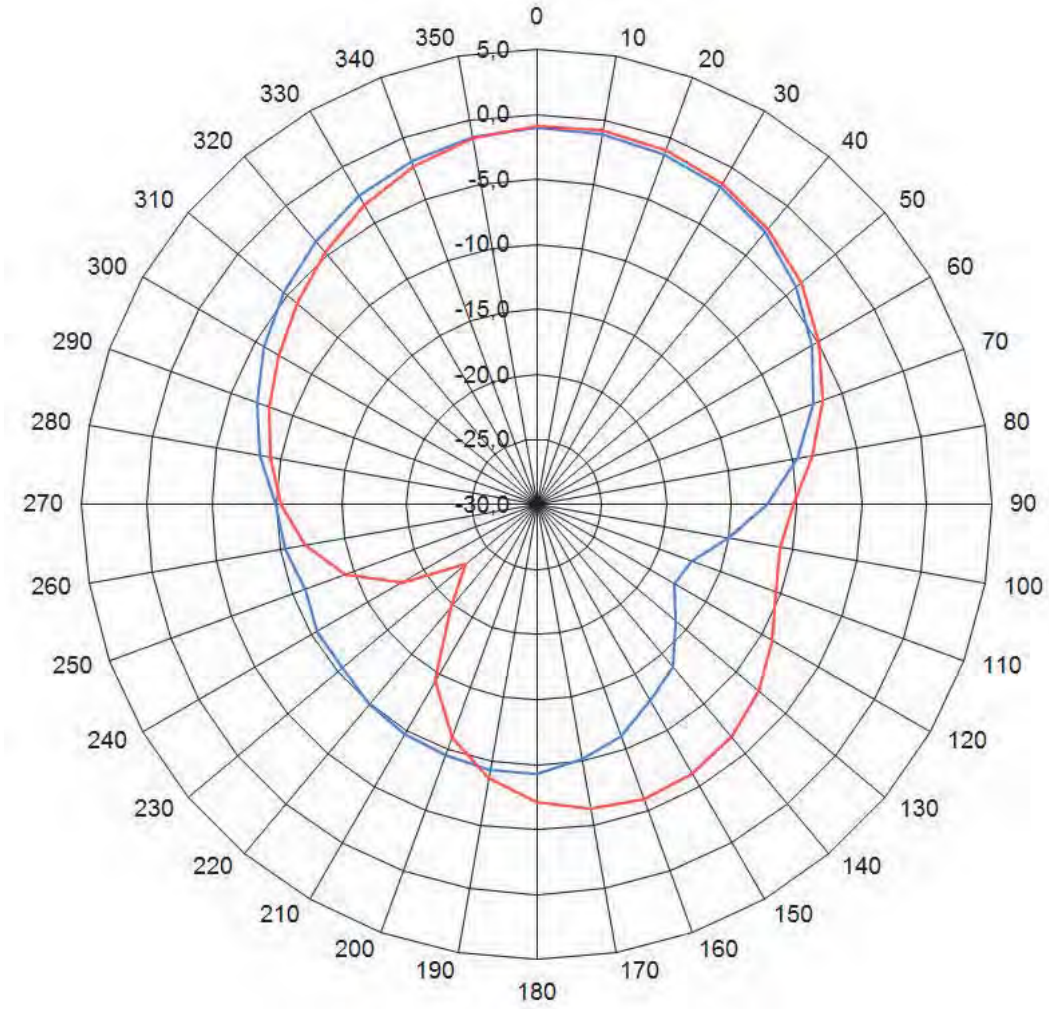

Pattern of the vertical plane of the antenna

Pattern of the horizontal plane of the antenna

Figure 5-2 Directional radiation pattern of RF610R in the ETSI frequency band

Overview of the antenna parameters

Table 5- 6 Maximum linear electrical aperture angle at 865 MHz:

	Polarization (circular)
Azimuth section	100°
Elevation section	100°
Typical antenna gain in the frequency band 865 to 868 MHz	-1 dBi
Antenna axis ratio	2 dB

You will find more information on the antennas in the section "Guidelines for selecting RFID UHF antennas (Page 51)".

Antenna diagram for RF610R (FCC)

The following radiation diagrams show the directional characteristics of the internal antenna of the RF610R (FCC) reader. For the spatial presentation of the directional characteristics, the horizontal plane (azimuth section) as well as the vertical plane (elevation section) must be considered. This results in a spatial image of the directional radiation pattern of the antenna.

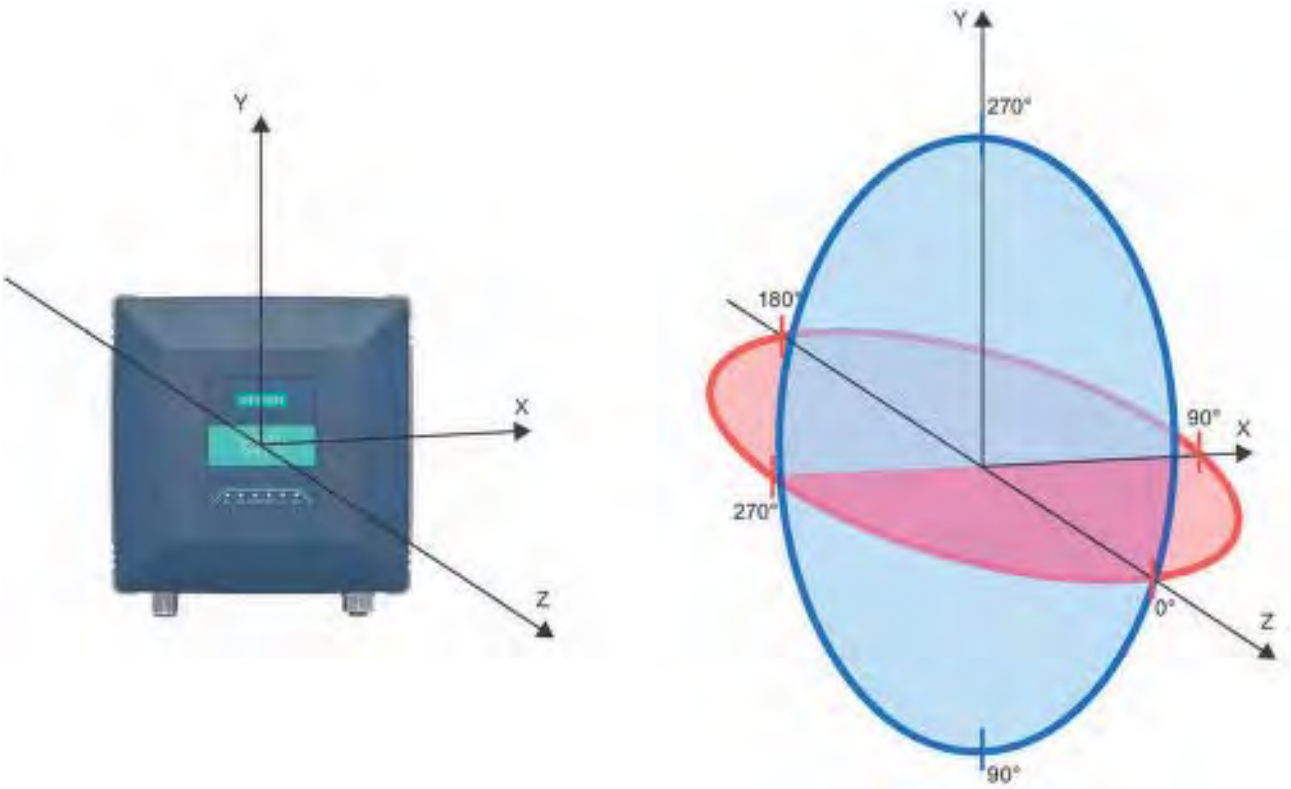

Figure 5-3 Reference system

Radiation diagram (FCC)

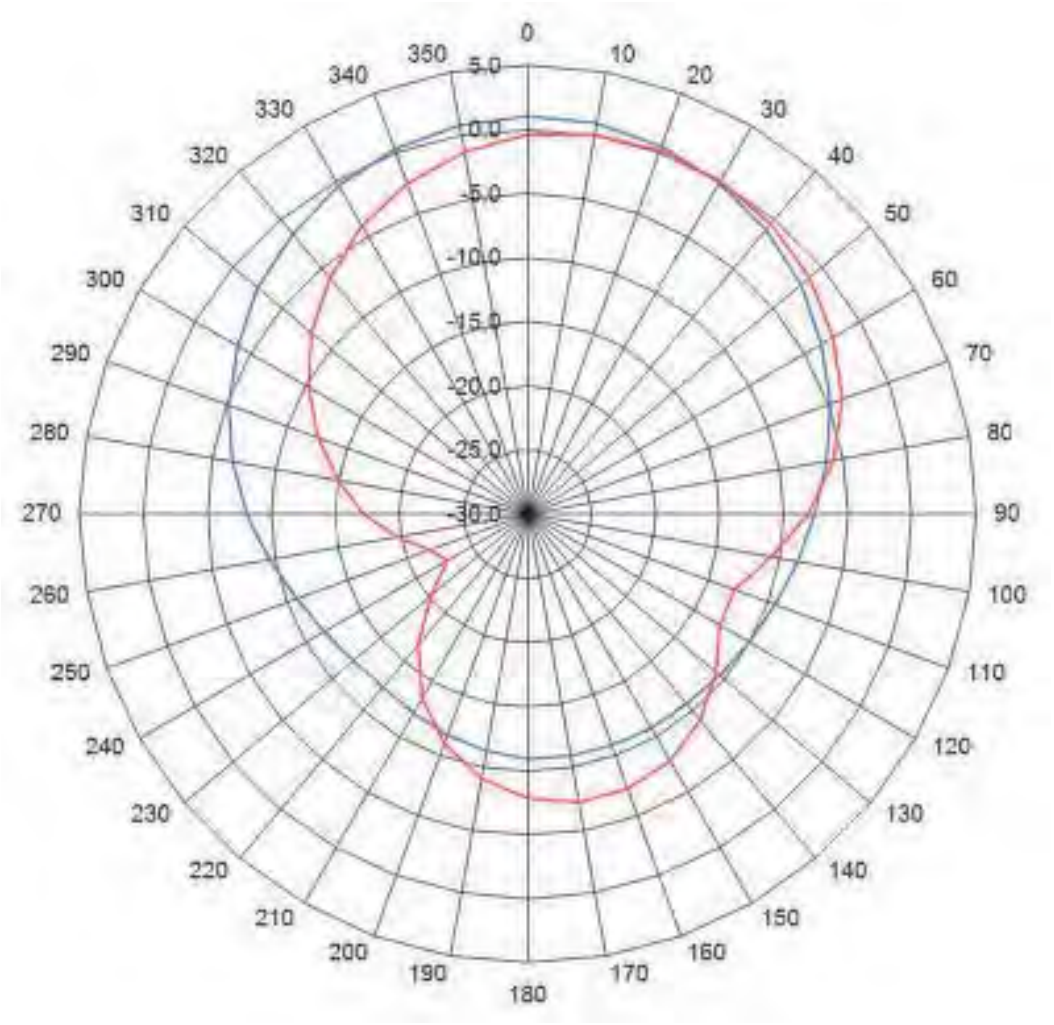

Pattern of the vertical plane of the antenna

Pattern of the horizontal plane of the antenna

Figure 5-4 Directional radiation pattern of RF610R in the FCC frequency band

Overview of the antenna parameters

Table 5- 7 Maximum linear electrical aperture angle at 915 MHz:

	Polarization (circular)
Azimuth section	100°
Elevation section	100°
Typical antenna gain in the frequency band 902 to 928 MHz	0 dBi
Antenna axis ratio	2 dB

You will find more information on the antennas in the section "Guidelines for selecting RFID UHF antennas (Page 51)".

5.2.2.2 Interpretation of radiation patterns

You can find detailed information on the interpretation in the section "Interpretation of radiation patterns (Page 215)".

5.2.3 Installation / mounting

Requirement

NOTICE
Close unused connectors Note that the readers only have the specified degree of protection when all connectors are in use or when unused connectors are closed with the protective caps.

⚠ CAUTION
Emitted radiation The transmitter complies with the requirements of Health Canada and the FCC limit values for subjecting persons to HF radiation, provided that a minimum spacing of 26 cm exists between antenna and person. When the antennas are installed, you must therefore ensure that a minimum spacing of 26 cm is maintained between personnel and antennas.

Mounting/installing the device

You can mount the reader in the following ways:

- directly on a flat surface using the VESA 100 mounting system (torque ≈ 1.5 Nm).

  The positions of the mounting holes for the device are shown in the section Dimension drawing (Page 120).

5.2.4 Configuration/integration

An Ethernet interface is available for integrating the device into system environments/networks. RF610R can be configured via the Ethernet interface and with direct connection to the PC. You can configure and program the reader using the following tools:

- STEP 7 Basic/Professional (TIA Portal)
- or via EtherNet/IP
- Web Based Management (WBM)
- OPC UA or XML based user applications

Note that configuration in parallel is not possible using different tools. Simple process controls (e.g. a traffic signal) can be implemented directly using the reader via the digital input/output.

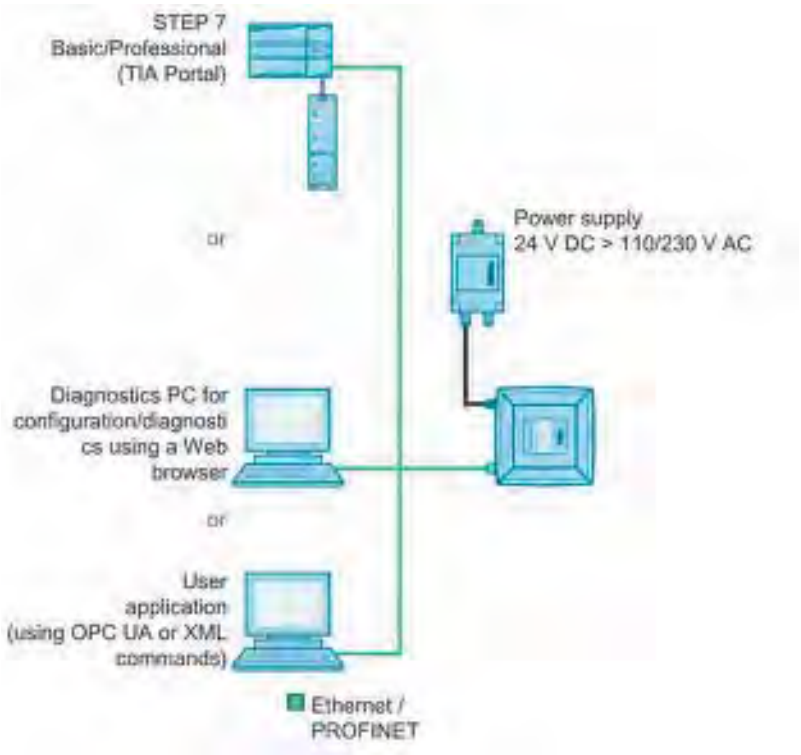

Figure 5-5 Overview: Configuration of RF610R readers

5.2.5 Technical specifications

Table 5- 8 Technical specifications of the RF610R reader

	6GT2811-6BC10-xAA0
Product type designation	SIMATIC RF610R
Radio frequencies	
Operating frequency	
• ETSI	• 865 to 868 MHz
• FCC	• 902 to 928 MHz
• CMIIT	• 920 to 925 MHz
Transmit power	
• ETSI	• 3 ... 400 mW
• FCC	• 3 ... 400 mW
• CMIIT	• 3 ... 400 mW
Maximum radiated power	
• ETSI	• 200 mW ERP
• FCC	• 400 mW EIRP
• CMIIT	• 250 mW ERP
Electrical data	
Range (internal antenna)	
• ETSI	• ≤ 1 m
• FCC	• ≤ 1 m
• CMIIT	• ≤ 1 m
Protocol	ISO 18000-62/-63
Transmission speed	≤ 300 kbps
Frequency accuracy	≤ ±10 ppm
Channel spacing	
• ETSI	• 600 kHz
• FCC	• 500 kHz
• CMIIT	• 250 kHz
Modulation methods	ASK: DSB modulation & PR-ASK modulation encoding, Manchester or Pulse Interval (PIE)
Multitag capability	Yes

	6GT2811-6BC10-xAA0
Typical transmission time per byte	
• Write access	• 2 ms
• Read access	• 0.15 ms
Supply voltage	24 VDC (20 ... 30 VDC) [1]
Maximum permitted current consumption	0.3 A
Current consumption (on standby), typical	
• 20 V input voltage on the reader	• 200 mA / 4 W
• 24 V input voltage on the reader	• 170 mA / 4.1 W
• 30 V input voltage on the reader	• 150 mA / 4.2 W
Current consumption (at 400 mW transmit power), typical	
• 20 V input voltage on the reader	• 260 mA / 5.2 W
• 24 V input voltage on the reader	• 220 mA / 5.3 W
• 30 V input voltage on the reader	• 170 mA / 5.1 W

Interfaces	
Power supply	1x M12 (8-pin)
Ethernet interface	1x M12 (4-pin), 100 Mbps

Mechanical specifications	
Material	Pocan (silicone-free)
Color	TI-Grey

Permitted ambient conditions	
Ambient temperature	
• During operation	• -25 ... +55 °C
• During transportation and storage	• -40 ... +85 °C
Conditions relating to UL approval	• for indoor use only (dry location) • Mounting height shall be equal or less than 2 m (MS1 classification according UL/IEC 62368-1). La hauteur de montage doit être égale ou inférieure à 2 m (classification MS1 selon CEI 62368-1).
Degree of protection	IP67
Shock resistant to EN 60068-2-27	25.5 g [2]
Vibration to EN 60068-2-6	3.1 g [2]

	6GT2811-6BC10-xAA0
Design, dimensions and weight	
Dimensions (W × H × D)	140.5 × 133 × 45 mm
Weight	370 g
Type of mounting	VESA 100 4x screws M4 (≈ 1.5 Nm)
Operation indicator	6 LEDs
Status display	1 LED (enclosure, all-round)
Standards, specifications, approvals	
Proof of suitability	EN 301 489-1 V2.2.0 / EN 301 489-3 V2.1.1 / EN 302 208 V3.1.1 FCC CFR 47, Part 15 section 15.247
MTBF	29 years

1) All supply and signal voltages must be safety extra low voltage (SELV/PELV according to EN 60950). All voltage sources must meet the requirements of limited power sources (LPS) and NEC Class 2.
Note that, depending on the power consumption, using extension cables > 20 m (6GT2891-4FN50) may lead to a voltage drop on the reader. This voltage drop can mean that the necessary minimum voltage on the reader is below the required 20 V.

2) The values for shock and vibration are maximum values and must not be applied continuously. These values only apply to mounting using screws.

5.2.6 Dimension drawing

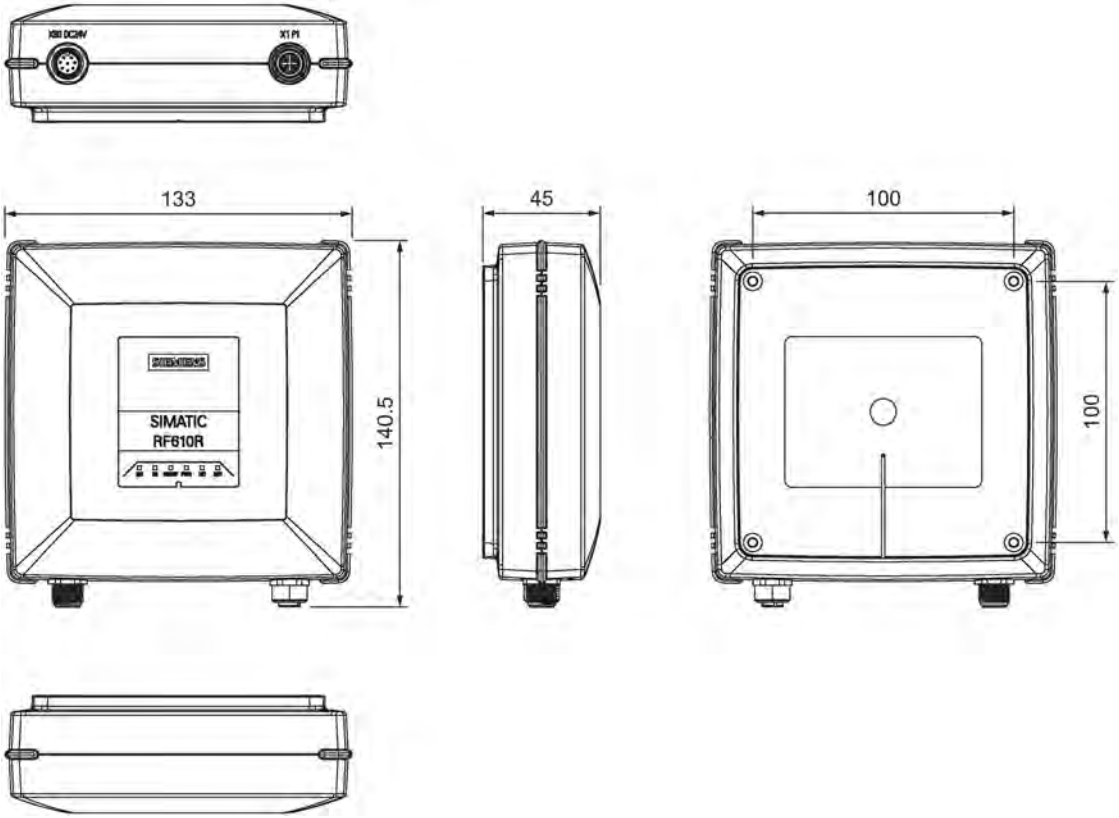

Figure 5-6 Dimension drawing RF610R

All dimensions in mm (± 0.5 mm tolerance)

5.2.7 Certificates and approvals

5.2.7.1 CE mark

Note

Marking on the readers according to specific approval

The certificates and approvals listed here apply only if the corresponding mark is found on the readers.

Table 5- 9 6GT2811-6BC10-0AA0

Labeling	Description
CE	Conformity with the RED directive 2014/53/EU Conformity with the RoHS directive 2011/65/EU

5.2.7.2 Country-specific certifications

Table 5- 10 6GT2811-6BC10-1AA0

Labeling	Description
FC Federal Communications Commission	FCC CFR 47, Part 15 section 15.247 Radio Frequency Interference Statement This equipment has been tested and found to comply with the limits for a Class B digital device, pursuant to Part 15 of the FCC Rules. FCC ID: NXW-RF610R
Industry Canada Radio Standards Specifications	RSS-247 Issue 2 IC: 267X-RF610R
UL C US	This product is UL-certified for the USA and Canada. It meets the following safety standard(s): UL/IEC 62368-1, 2nd Ed CAN/CSA C22.2 No. 62368-1-14, 2nd Ed Audio/video, information and communication technology equipment - Part 1: Safety requirements

Table 5- 11 6GT2811-6BC10-2AA0

Standard	
CMIIT Certification	China radio approval Marking on the reader: CMIIT ID: 2018DJxxxx

5.2.7.3 FCC information

Siemens SIMATIC RF610R (FCC): 6GT2811-6BC10-1AA0

FCC ID: NXW-RF610R

This device complies with part 15 of the FCC rules. Operation is subject to the following two conditions:

(1) This device may not cause harmful interference, and

(2) this device must accept any interference received, including interference that may cause undesired operation.

Caution

Any changes or modifications not expressly approved by the party responsible for compliance could void the user's authority to operate the equipment.

Note

This equipment has been tested and found to comply with the limits for a Class B digital device, pursuant to part 15 of the FCC Rules.

These limits are designed to provide reasonable protection against harmful interference when the equipment is operated in a commercial environment. This equipment generates, uses, and can radiate radio frequency energy and, if not installed and used in accordance with the instruction manual, may cause harmful interference to radio communications. Operation of this equipment in a residential area is likely to cause harmful interference in which case the user will be required to correct the interference at his own expense.

FCC Notice

To comply with FCC part 15 rules in the United States, the system must be professionally installed to ensure compliance with the Part 15 certification.

It is the responsibility of the operator and professional installer to ensure that only certified systems are deployed in the United States. The use of the system in any other combination (such as co-located antennas transmitting the same information) is expressly forbidden.

FCC Exposure Information

To comply with FCC RF exposure compliance requirements, the antennas used for this transmitter must be installed to provide a separation distance of at least 20 cm from all persons and must not be co-located or operating in conjunction with any other antenna or transmitter.

5.2.7.4 IC-FCB information

Siemens SIMATIC RF610R (FCC): 6GT2811-6BC10-1AA0

IC: 267X-RF610R

This device complies with Industry Canada licence-exempt RSS standard(s). Operation is subject to the following two conditions:

(1) This device may not cause interference, and

(2) this device must accept any interference, including interference that may cause undesired operation of the device.

Le présent appareil est conforme aux CNR d`Industrie Canada applicables aux appareils radio exempts de licence. L`exploitation est autorisée aux deux conditions suivantes :

(1) L`appareil ne doit pas produire de brouillage, et

(2) l'utilisateur de l`appareil doit accepter tout brouillage radioélectrique subi, même si le brouillage est susceptible d`en compromettre le fonctionnement.

5.2.7.5 Other certificates and approvals

ISA-S71.04-1985

RF610R reader meets the requirements according to ISA-S71.04-1985 Airborne Contaminants Class G3.

5.3 SIMATIC RF615R

5.3.1 Description

5.3.1.1 Overview

The SIMATIC RF615R is a stationary reader in the UHF frequency band with an integrated antenna. An external UHF RFID antenna can be connected via an RP-TNC connector.

The maximum transmit power is 400 mW, the radiant power of the internal antenna is 200 or 250 mW ERP / 400 mW EIRP. A radiated power of up to 1000 mW ERP / 1800 mW EIRP is achieved when the appropriate antennas and antenna cables are used. The interfaces (Ethernet, power supply, DI/DQ interface) are located on the lower front edge. These interfaces can be used to connect the reader to the power supply, to a digital input/output, and to a PC for parameter assignment.

The degree of protection is IP67.

	Pos.	Description
	①	RP-TNC interface for connection of an external antenna
	②	"PRESENCE" LED (PRE)
	③	LED operating display
	④	Interface to power supply (RS422), 24 V DC [1]: X80 DC24V (M12, 8-pin)
	⑤	DI/DQ interface: X10 DI/DQ (M12, 5-pin)
	⑥	Ethernet interface, TCP/IP: X1 P1 (M12, 4-pin)

[1]) Connection of the readers to the ASM 456 communications module via the RS-422 interface.

5.3.1.2 Ordering data

Table 5- 12 RF615R ordering data

Product	Article number
RF615R (ETSI)	6GT2811-6CC10-0AA0
RF615R (FCC)	6GT2811-6CC10-1AA0
RF615R (CMIIT)	6GT2811-6CC10-2AA0

Table 5- 13 Ordering data accessories

Product			Article number
SIMATIC antenna holder for RF600 devices			6GT2890-2AB10
Connecting cable and connectors			
	• DI/DO plug M12 for fabrication		3RK1902-4BA00-5AA0
	• Ethernet plug on the reader FastConnect M12 (IP65)		6GK1901-0DB20-6AA0
	• Ethernet plug Standard IE FastConnect RJ45 180 (IP20)		6GK1901-1BB10-2AA0
	• Industrial Ethernet cable M12 / M12	5 m	6XV1870-8AH50
	• Industrial Ethernet connecting cable M12-180 / RJ45	2 m	6XV1871-5TH20
		3 m	6XV1871-5TH30
		5 m	6XV1871-5TH50
	• Industrial Ethernet cable by the meter, green (minimum 20 m)		6XV1840-2AH10
	• Connecting cable reader ↔ CM M12-180 / M12-180	2 m	6GT2891-4FH20
		5 m	6GT2891-4FH50
		10 m	6GT2891-4FN10
		20 m	6GT2891-4FN20
		50 m	6GT2891-4FN50
Wide-range power supply unit for SIMATIC RF systems			
	• With EU plug		6GT2898-0AC00
	• With UK plug		6GT2898-0AC10
	• With US plug		6GT2898-0AC20
24 V connecting cable reader ↔ wide-range power supply unit			
	• with plug, 5 m		6GT2891-0PH50
	• with open ends, 2 m		6GT2891-4EH20
	• with open ends, 5 m		6GT2891-4EH50
DVD "Ident Systems Software & Documentation"			6GT2080-2AA20

5.3.1.3 Pin assignment of the DI/DQ interface (X10 DI/DQ)

Table 5- 14 Pin assignment of the DI/DQ interface (reader end)

View of interface (M12 socket, 5-pin)	Pin	Pin assignment
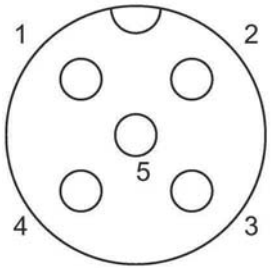	1	DI Common / Input Common
	2	DO / Output
	3	DO Common / Output Common
	4	DI / Input
	5	Not connected

Note

Requirement for external power sources

If the DI/DQ interface is supplied by means of an external power source, the power source must comply with requirements on limited power sources (LPS) and NEC Class 2.

Requirement for external power sources

If the DI/DQ interface is supplied by an external power source, the power source must comply with requirements on limited power sources (LPS) and NEC Class 2.

Spécification des sources de tension externes

En cas d'alimentation de l'interface DI/DO par une source de tension externe, la source de tension doit être conforme aux spécifications des sources à puissance limitée (Limited Power Sources LPS) et de NEC class 2.

5.3.1.4 Switching scheme for the DI/DQ interface

Connection possibilities

You can connect the reader in different ways. In general, the outputs and inputs should be connected as follows:

Output (DQ)

- The output at < 20 °C is rated for 0.5 A current (0.33 A at 55 °C) and electronically protected.
- The output is electrically isolated via optocoupler.

Input (DI)

- The input is set up with electrical isolation via optocoupler.
- Level
  - Low: 0 ... 7 V
  - High: 15 ... 24 V

The following diagrams illustrate various connection possibilities.

Note

Minimum time between changes

Note that changes on the DI/DQ interface that are not applied for at least 1.5 seconds are not detected by the reader.

Voltage infeed from external source

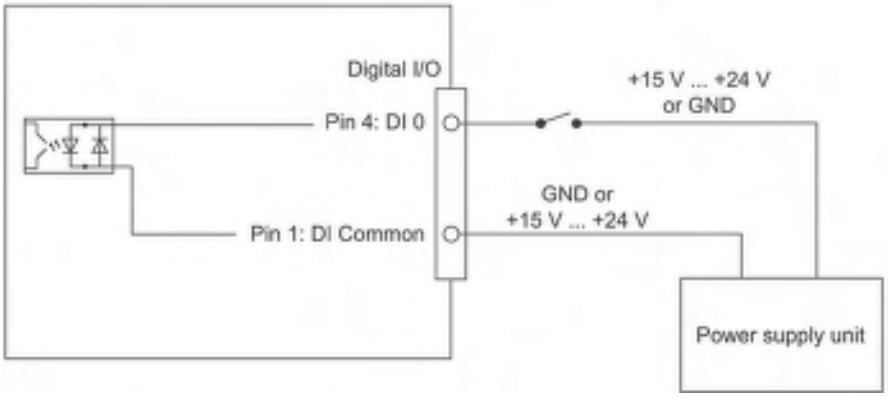

Figure 5-7 Circuit example 1: Digital input

Voltage infeed from external source

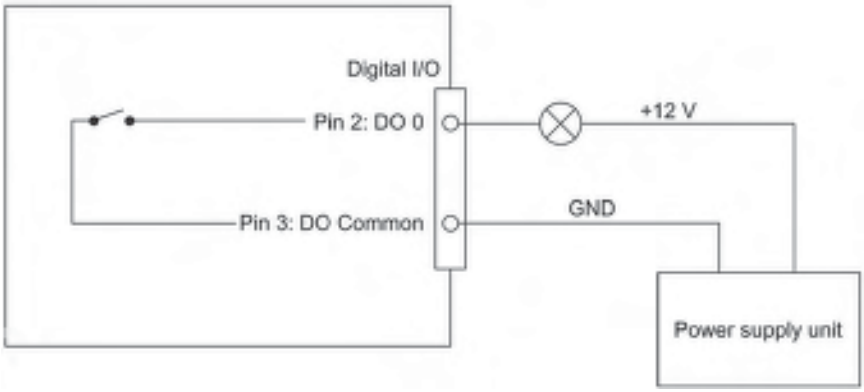

Figure 5-8 Circuit example 2: Digital output

Voltage infeed from an external source is shown here for 12 V as an example. Other voltages are also permissible.

5.3.1.5 Pin assignment of the power supply interface (X80 24VDC)

Table 5- 15 Pin assignment of the RS422 interface (reader end)

View of interface (M12 socket, 8-pin)	Pin	Wire colors	Assignment
	1	White	+ 24 V
	2 [1]	Brown	- Tx
	3	Green	0 V
	4 [1]	Yellow	+ Tx
	5 [1]	Gray	+ Rx
	6 [1]	Pink	- Rx
	7	--	Unassigned
	8	--	Earth (shield)

[1] These pins are not required if the reader is operated via Ethernet.

Note

Requirement for external power sources

The reader must only be supplied with power by power supply units that meet the requirements of LPS (Limited Power Source) and NEC Class 2.

Requirement for external power sources

The reader must only be supplied with power by power supply units that meet the requirementsof limited power source (LPS) and NEC Class 2.

Spécification des sources de tension externes

L'alimentation du plot de lecture/écriture doit être exclusivement assurée par des blocs d'alimentation conformes aux spécifications des sources à puissance limitée (Limited Power Sources LPS) et de NEC class 2.

Notes on connectors and cables

The cables with open cable ends (6GT2891-4EH20, 6GT2891-4EH50) have an 8-pin M12 plug at one end, while the other end of the cable is "open". There are 8 color-coded single wires there for connecting to external devices.

The product range includes additional cables of the type 6GT2891-4Fxxx (2 to 50 m) with an M12 connector at both ends. These cables can be used as extension cables. Long cables can be shortened if necessary.

NOTICE
Insulate unused single wires Unused single wires must be insulated individually to prevent unwanted connections of signal lines.

NOTICE
For long cables: Adapt the power supply and transmission speed Note that even with long cables, the supply voltage of 24 VDC must always be guaranteed. Note also that the transmission speed on the serial interface must, if necessary, be reduced. SIMATIC standard cables (e.g. 6GT2891-4FN10) have a loop resistance of 160 mOhm / meter. This results in a voltage drop of 0.8 volts on the 24 V cable for every 10 meters of connecting cable and with a power requirement of 500 mA. If the power requirement increases through the use of the digital inputs/outputs, the voltage drop increases accordingly.

5.3.1.6 Pin assignment of the Industrial Ethernet interface (X1 P1)

Table 5- 16 Pin assignment of the Industrial Ethernet interface (reader end)

View of interface (M12 socket, 4-pin)	Pin	Pin assignment
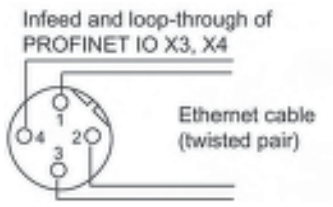	1	Data line +Tx
	2	Data line +Rx
	3	Data line -Tx
	4	Data line -Rx

5.3.1.7 Ground connection

Due to the potential-free design of the reader, no earthing measures are required.

5.3.2 Planning operation

5.3.2.1 Internal antenna

Minimum mounting clearances of two readers

RF615R has an internal circular antenna. To prevent the antenna fields from overlapping, always observe the recommended minimum distances between two readers as described in the section "Reciprocal influence of read points (Page 47)".

Dense Reader Mode (DRM)

The readers can also interfere with each other (secondary fields), if the channels (Reader TX, Transponder TX) overlap. In order to prevent a transponder channel overlapping with a reader channel, we recommend that the Dense Reader Mode (DRM) is used.

Note

Protective cap

If you only use the internal antenna of the reader, we recommend that you close the external, unused antenna connector on the reader using a protective cap.

Antenna diagram RF615R (ETSI)

The following radiation diagrams show the directional characteristics of the internal antenna of the RF615R (ETSI) reader. For the spatial presentation of the directional characteristics, the horizontal plane (azimuth section) as well as the vertical plane (elevation section) must be considered. This results in a spatial image of the directional radiation pattern of the antenna.

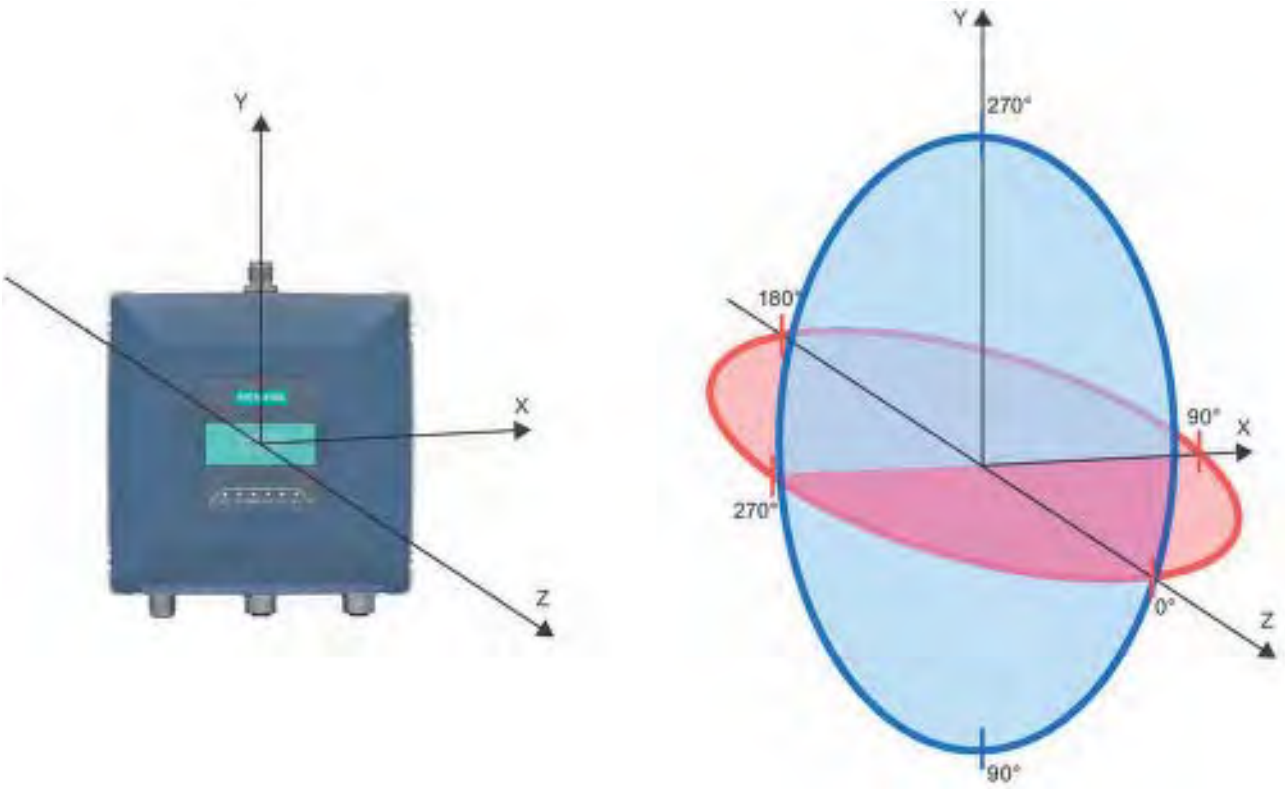

Figure 5-9 Reference system

Radiation diagram (ETSI)

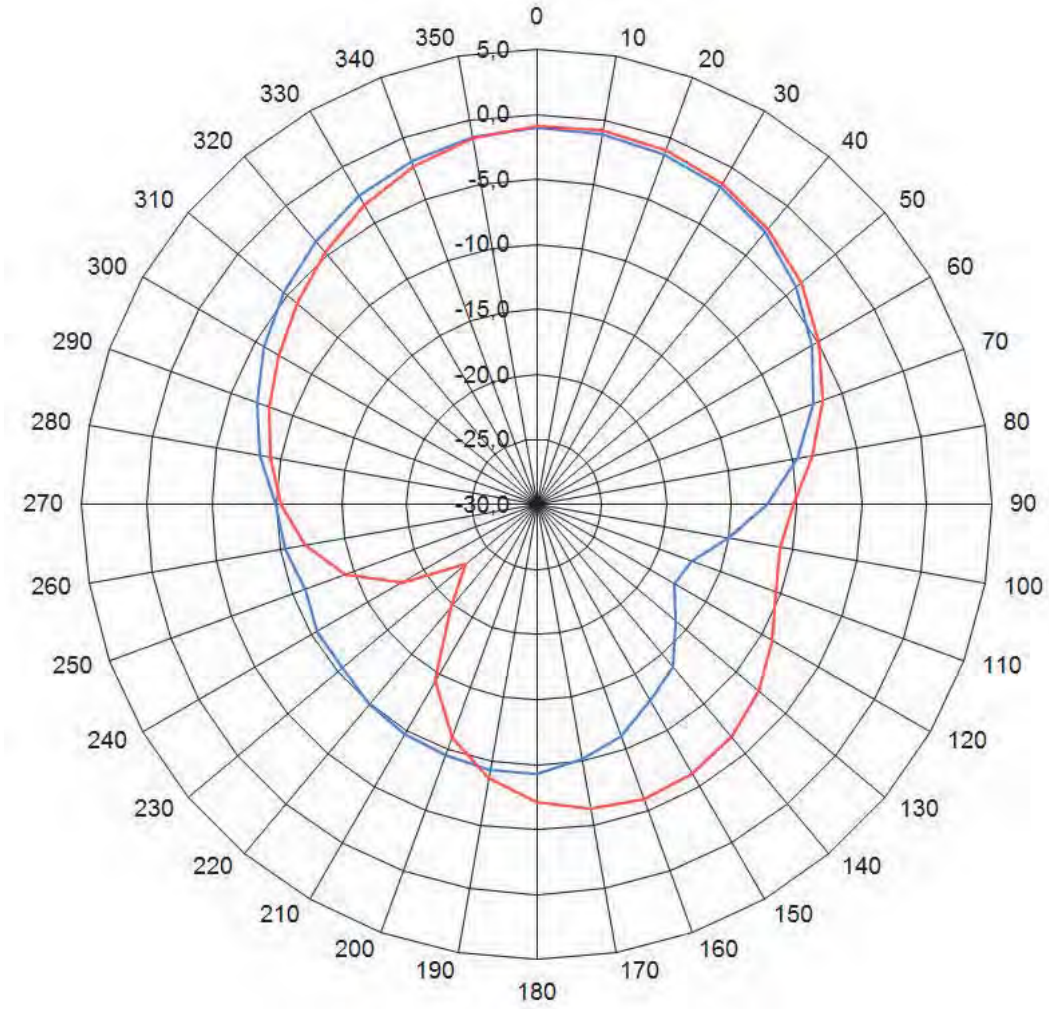

Pattern of the vertical plane of the antenna

Pattern of the horizontal plane of the antenna

Figure 5-10 Directional radiation pattern of RF615R in the ETSI frequency band

Overview of the antenna parameters

Table 5- 17 Maximum linear electrical aperture angle at 865 MHz:

	Polarization (circular)
Azimuth section	100°
Elevation section	100°
Typical antenna gain in the frequency band 865 to 868 MHz	-1 dBi
Antenna axis ratio	2 dB

You will find more information on the antennas in the section "Guidelines for selecting RFID UHF antennas (Page 51)".

Antenna diagram for RF615R (FCC)

The following radiation diagrams show the directional characteristics of the internal antenna of the RF615R (FCC) reader. For the spatial presentation of the directional characteristics, the horizontal plane (azimuth section) as well as the vertical plane (elevation section) must be considered. This results in a spatial image of the directional radiation pattern of the antenna.

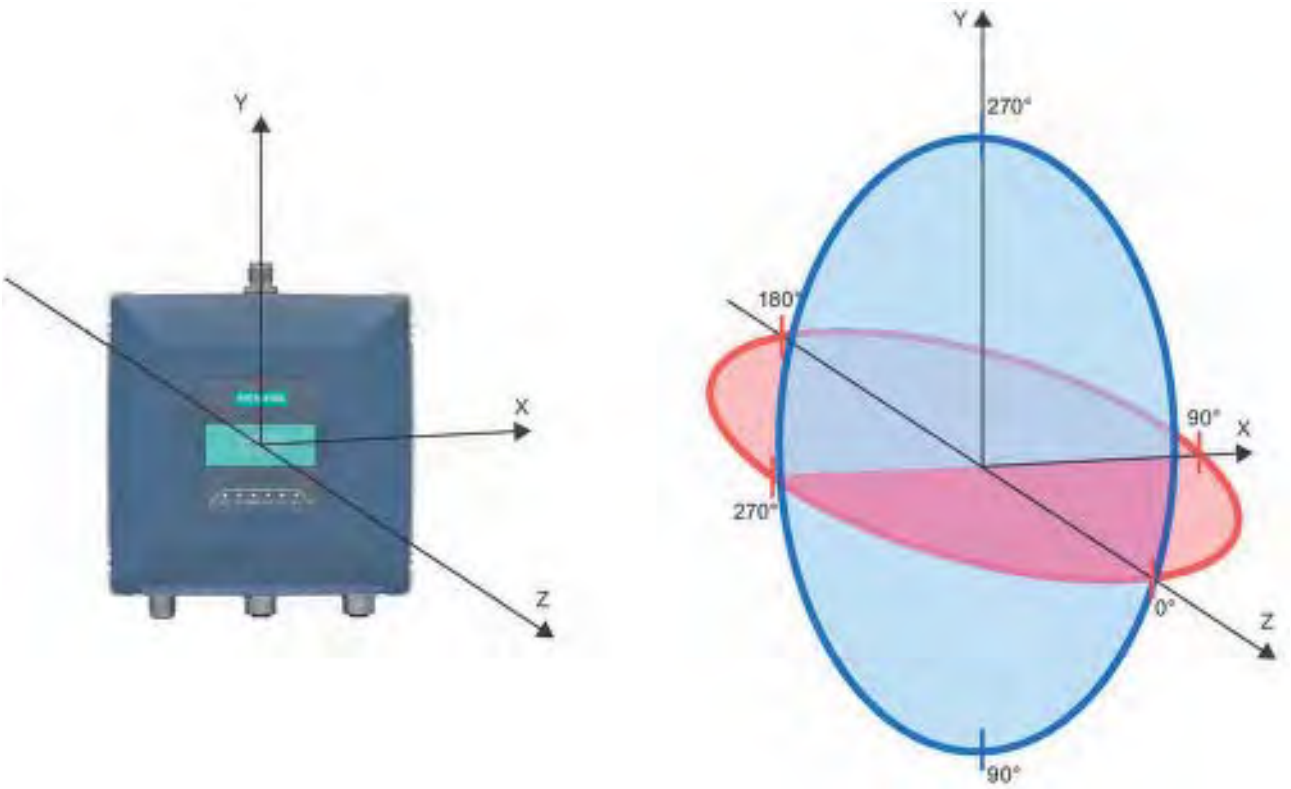

Figure 5-11 Reference system

Radiation diagram (FCC)

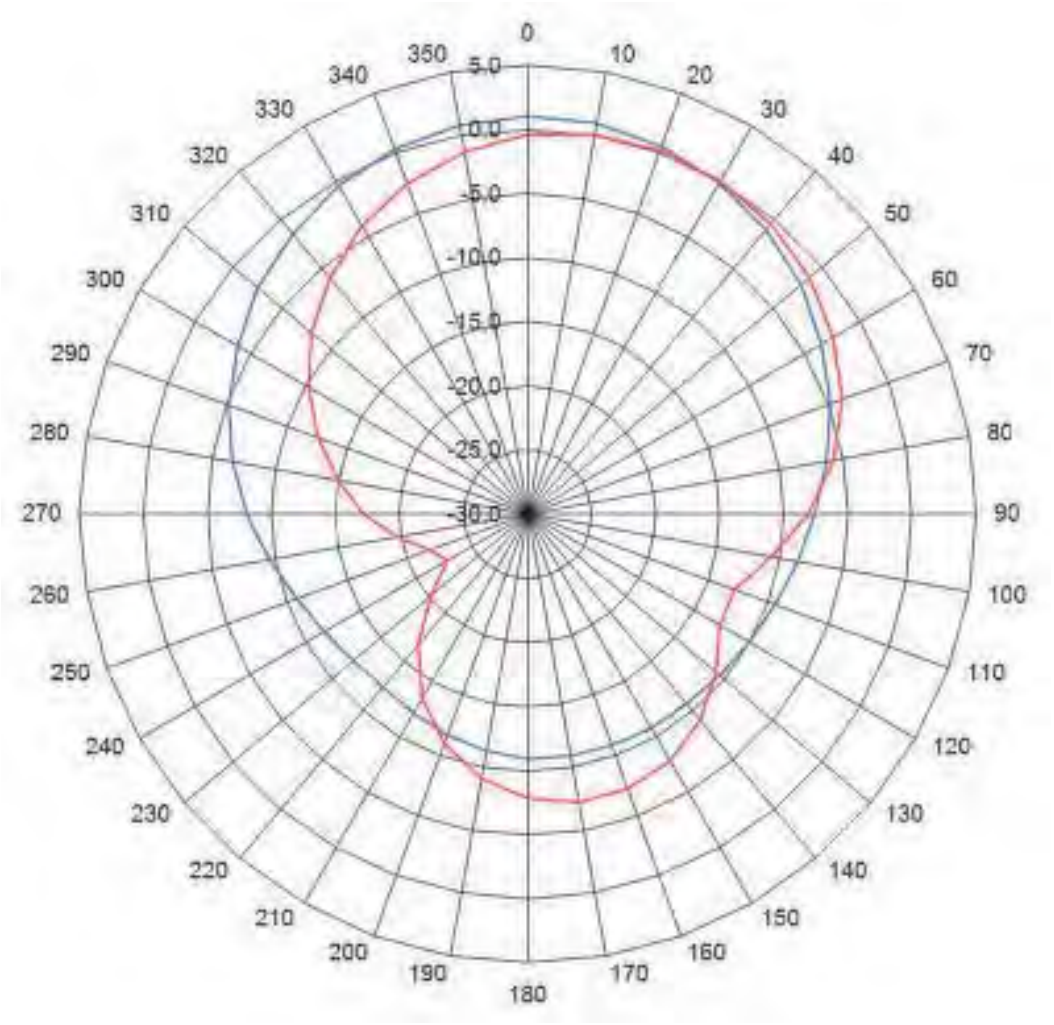

Pattern of the vertical plane of the antenna

Pattern of the horizontal plane of the antenna

Figure 5-12 Directional radiation pattern of RF615R in the FCC frequency band

Overview of the antenna parameters

Table 5- 18 Maximum linear electrical aperture angle at 915 MHz:

	Polarization (circular)
Azimuth section	100°
Elevation section	100°
Typical antenna gain in the frequency band 902 to 928 MHz	0 dBi
Antenna axis ratio	2 dB

You will find more information on the antennas in the section "Guidelines for selecting RFID UHF antennas (Page 51)".

Interpretation of radiation patterns

You can find detailed information on the interpretation in the section "Interpretation of radiation patterns (Page 215)".

5.3.2.2 External antenna

Preassembled standard cables in lengths of 1 m, 3 m, 5 m, 10 m, 15 m, 20 m and 40 m are available to connect the antenna.

The read range is limited by the cable loss. The maximum range can be achieved with the cable 6GT2815-0BH10 (length 1 m) since this has the lowest cable loss.

Examples of possible antenna reading point configurations

- A data source with an external antenna for a reading point.
- As an alternative, a data source with an internal antenna for a reading point.

5.3.3 Installing/mounting

Requirement

NOTICE
Close unused connectors Note that the readers only have the specified degree of protection when all connectors are in use or when unused connectors are closed with the protective caps.

⚠ CAUTION
Emitted radiation The transmitter complies with the requirements of Health Canada and the FCC limit values for subjecting persons to HF radiation, provided that a minimum spacing of 26 cm exists between antenna and person. When the antennas are installed, you must therefore ensure that a minimum spacing of 26 cm is maintained between personnel and antennas.

Mounting/installing the device

You can mount the reader in the following ways:

- directly on a flat surface using the VESA 100 mounting system (torque ≈ 1.5 Nm).

  The positions of the mounting holes for the device are shown in the section Dimension drawing (Page 141).

5.3.4 Configuration/integration

An Ethernet interface is available for integrating the device into system environments/networks. RF615R can be configured via the Ethernet interface and with direct connection to the PC. You can configure and program the reader using the following tools:

- STEP 7 Basic/Professional (TIA Portal)
- or via EtherNet/IP
- Web Based Management (WBM)
- OPC UA or XML based user applications

Note that configuration in parallel is not possible using different tools. Simple process controls (e.g. a traffic signal) can be implemented directly using the reader via the digital input/output.

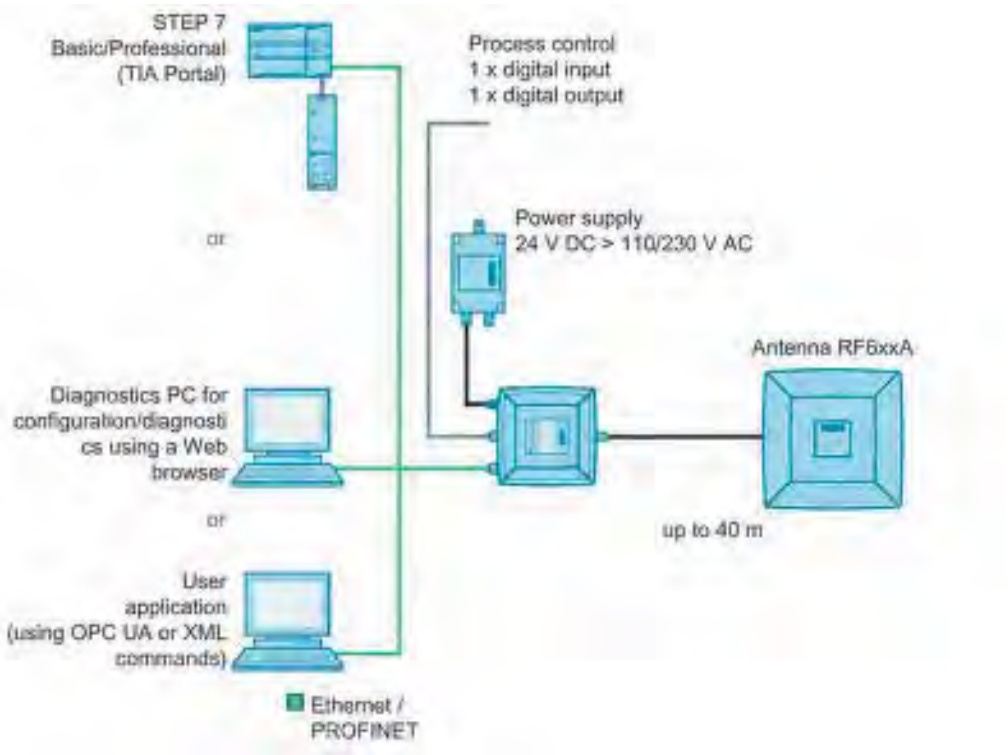

Figure 5-13 Overview: Configuration of RF615R readers

5.3.5 Technical specifications

Table 5- 19 Technical specifications of the RF615R reader

	6GT2811-6CC10-xAA0
Product type designation	SIMATIC RF615R
Radio frequencies	
Operating frequency	
• ETSI	• 865 to 868 MHz
• FCC	• 902 to 928 MHz
• CMIIT	• 920 to 925 MHz
Transmit power [1)]	
• ETSI	• 3 ... 400 mW
• FCC	• 3 ... 400 mW
• CMIIT	• 3 ... 400 mW
Maximum radiated power per antenna	
• ETSI	• 1000 mW ERP
• FCC	• 1800 mW EIRP
• CMIIT	• 1000 mW ERP
Electrical data	
Range (internal antenna)	
• ETSI	• ≤ 1 m
• FCC	• ≤ 1 m
• CMIIT	• ≤ 1 m
Protocol	ISO 18000-62/-63
Transmission speed	≤ 300 kbps
Frequency accuracy	≤ ±10 ppm
Channel spacing	
• ETSI	• 600 kHz
• FCC	• 500 kHz
• CMIIT	• 250 kHz
Modulation methods	ASK: DSB modulation & PR-ASK modulation encoding, Manchester or Pulse Interval (PIE)
Multitag capability	Yes

	6GT2811-6CC10-xAA0
Typical transmission time per byte	
• Write access	• 2 ms
• Read access	• 0.15 ms
Supply voltage	24 V DC (20 ... 30 V DC) [2)]
Maximum permitted current consumption	0.3 A
Maximum permitted current consumption via DI/DQ interface	
• < 20 °C	• 0.5 A
• ≈ 55 °C	• 0.33 A
Current consumption (on standby), typical	
• 20 V input voltage on the reader	• 200 mA / 4 W
• 24 V input voltage on the reader	• 170 mA / 4.1 W
• 30 V input voltage on the reader	• 150 mA / 4.2 W
Current consumption (at 400 mW transmit power), typical	
• 20 V input voltage on the reader	• 260 mA / 5.2 W
• 24 V input voltage on the reader	• 220 mA / 5.3 W
• 30 V input voltage on the reader	• 170 mA / 5.1 W

Interfaces	
Antenna connectors	1x RP-TNC
Power supply	1x M12 (8-pin)
DI/DQ interface	1x M12 (5-pin)
Digital inputs	1
Digital outputs	1
Ethernet interface	1x M12 (4-pin), 100 Mbps

Mechanical specifications	
Material	Pocan (silicone-free)
Color	TI-Grey

	6GT2811-6CC10-xAA0
Permitted ambient conditions	
Ambient temperature	
• During operation	• -25 ... +55 °C
• During transportation and storage	• -40 ... +85 °C
Conditions relating to UL approval	• for indoor use only (dry location) • Mounting height shall be equal or less than 2 m (MS1 classification according UL/IEC 62368-1). La hauteur de montage doit être égale ou inférieure à 2 m (classification MS1 selon CEI 62368-1).
Degree of protection	IP67
Shock resistant to EN 60068-2-27	25.5 g [3]
Vibrations according to EN 60068-2-6	3.1 g [3]
Design, dimensions and weight	
Dimensions (W × H × D)	155 × 133 × 45 mm
Weight	370 g
Type of mounting	VESA 100 4x screws M4 (≈ 1.5 Nm)
Operation indicator	6 LEDs
Status display	1 LED (enclosure, all-round)
Standards, specifications, approvals	
Proof of suitability	EN 301 489-1 V2.2.0 / EN 301 489-3 V2.1.1 / EN 302 208 V3.1.1 FCC CFR 47, Part 15 section 15.247
MTBF	29 years

[1] Measured at the output of the antenna socket.

[2] All supply and signal voltages must be safety extra low voltage (SELV/PELV according to EN 60950). All voltage sources must meet the requirements of limited power sources (LPS) and NEC Class 2.
Note that, depending on the power consumption, using extension cables > 20 m (6GT2891-4FN50) may lead to a voltage drop on the reader. This voltage drop can mean that the necessary minimum voltage on the reader is below the required 20 V.

[3] The values for shock and vibration are maximum values and must not be applied continuously. These values only apply to mounting using screws.

5.3.6 Dimension drawing

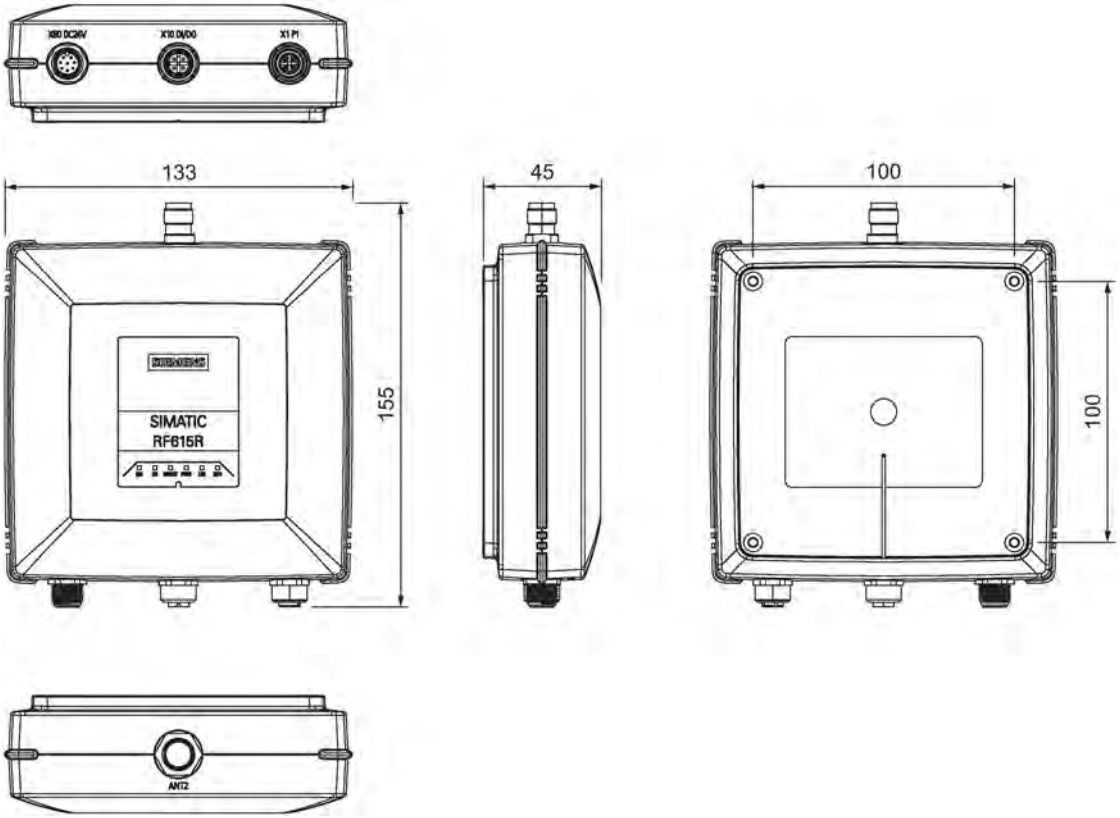

Figure 5-14 Dimension drawing RF615R

All dimensions in mm (± 0.5 mm tolerance)

5.3.7 Certificates and approvals

5.3.7.1 CE mark

Note

Marking on the readers according to specific approval

The certificates and approvals listed here apply only if the corresponding mark is found on the readers.

Table 5- 20 6GT2811-6CC10-0AA0

Labeling	Description
CE	Conformity with the RED directive 2014/53/EU Conformity with the RoHS directive 2011/65/EU

5.3.7.2 Country-specific certifications

Table 5- 21 6GT2811-6CC10-1AA0

Labeling	Description
FC Federal Communications Commission	FCC CFR 47, Part 15 section 15.247 Radio Frequency Interference Statement This equipment has been tested and found to comply with the limits for a Class B digital device, pursuant to Part 15 of the FCC Rules. FCC ID: NXW-RF615R
Industry Canada Radio Standards Specifications	RSS-247 Issue 2 IC: 267X-RF615R
UL C US	This product is UL-certified for the USA and Canada. It meets the following safety standard(s): UL/IEC 62368-1, 2nd Ed CAN/CSA C22.2 No. 62368-1-14, 2nd Ed Audio/video, information and communication technology equipment - Part 1: Safety requirements

Table 5- 22 6GT2811-6CC10-2AA0

Standard	
CMIIT Certification	China radio approval Marking on the reader: CMIIT ID: 2019DJ2356

5.3.7.3 FCC information

Siemens SIMATIC RF615R (FCC): 6GT2811-6CC10-1AA0

FCC ID: NXW-RF615R

This device complies with part 15 of the FCC rules. Operation is subject to the following two conditions:

(1) This device may not cause harmful interference, and

(2) this device must accept any interference received, including interference that may cause undesired operation.

Caution

Any changes or modifications not expressly approved by the party responsible for compliance could void the user's authority to operate the equipment.

Note

This equipment has been tested and found to comply with the limits for a Class B digital device, pursuant to part 15 of the FCC Rules.

These limits are designed to provide reasonable protection against harmful interference when the equipment is operated in a commercial environment. This equipment generates, uses, and can radiate radio frequency energy and, if not installed and used in accordance with the instruction manual, may cause harmful interference to radio communications. Operation of this equipment in a residential area is likely to cause harmful interference in which case the user will be required to correct the interference at his own expense.

FCC Notice

To comply with FCC part 15 rules in the United States, the system must be professionally installed to ensure compliance with the Part 15 certification.

It is the responsibility of the operator and professional installer to ensure that only certified systems are deployed in the United States. The use of the system in any other combination (such as co-located antennas transmitting the same information) is expressly forbidden.

FCC Exposure Information

To comply with FCC RF exposure compliance requirements, the antennas used for this transmitter must be installed to provide a separation distance of at least 20 cm from all persons and must not be co-located or operating in conjunction with any other antenna or transmitter.

5.3.7.4 IC-FCB information

Siemens SIMATIC RF615R (FCC): 6GT2811-6CC10-1AA0

IC: 267X-RF615R

This device complies with Industry Canada licence-exempt RSS standard(s). Operation is subject to the following two conditions:

(1) This device may not cause interference, and

(2) this device must accept any interference, including interference that may cause undesired operation of the device.

In order to comply with ISED RF Exposure requirements, this device must be installed to provide at least 20 cm separation from the human body at all times.

To comply with Industry Canada licence-exempt RSS standard(s), the system must be professionally installed to ensure compliance with IC certification.

Le présent appareil est conforme aux CNR d`Industrie Canada applicables aux appareils radio exempts de licence. L`exploitation est autorisée aux deux conditions suivantes :

(1) L`appareil ne doit pas produire de brouillage, et

(2) l'utilisateur de l`appareil doit accepter tout brouillage radioélectrique subi, même si le brouillage est susceptible d`en compromettre le fonctionnement.

Afin de se conformer aux exigences d'exposition RF ISED, cet appareil doit être installé pour fournir au moins 20 cm de séparation du corps humain en tout temps.

Pour se conformer aux normes RSS exemptes de licence d'Industrie Canada, le système doit être installé par un professionnel afin d'assurer la conformité avec la certification IC.

Industry Canada Notice

To reduce potential radio interference to other users, the antenna type and its gain should be so chosen that the equivalent isotropically radiated power (e.i.r.p.) is not more than that permitted for successful communication.

5.3.7.5 Other certificates and approvals

ISA-S71.04-1985

RF615R reader meets the requirements according to ISA-S71.04-1985 Airborne Contaminants Class G3.

5.4 SIMATIC RF650R

5.4.1 Description

5.4.1.1 Overview

The SIMATIC RF650R is a stationary reader in the UHF frequency band without an integrated antenna. Up to four external UHF RFID antennas can be connected via RP-TNC connectors.

The maximum transmit power is 1000 mW at the reader output. A radiated power of up to 2000 mW ERP / 4000 mW EIRP is achieved when the appropriate antennas and antenna cables are used. The interfaces (Ethernet, power supply, DI/DQ interface) are located on the lower front edge. These interfaces can be used to connect the reader to the power supply and a PC for parameter assignment.

The degree of protection is IP30.

	Pos.	Description
	①	RP-TNC interfaces for connecting up to 4 external antennas
	②	LED operating display
	③	DI/DQ interface: X10 DI/DQ (M12, 12-pin)
	④	Interface to power supply (RS422), 24 V DC [1]: X80 DC24V (M12, 8-pin)
	⑤	Ethernet interface, TCP/IP: X1 P1 (RJ45, 8-pin)

5.4.1.2 Ordering data

Table 5- 23 Ordering data RF650R

Product	Article number
RF650R (ETSI)	6GT2811-6AB20-0AA0
RF650R (FCC)	6GT2811-6AB20-1AA0
RF650R (CMIIT)	6GT2811-6AB20-2AA0
RF650R (ARIB)	6GT2811-6AB20-4AA0

Table 5- 24 Ordering data accessories

Product			Article number
Holders for securing the reader • DIN rail T35 (S7-1200) • S7-300 standard rail • S7-1500 standard rail			6GT2890-0AB00
SIMATIC antenna holder for RF600 devices			6GT2890-2AB10
Connecting cable and connectors			
	• DI/DQ cable connector open cable ends	5 m	6GT2891-0CH50
	• Ethernet plug Standard IE FastConnect RJ45 180 (IP20)		6GK1901-1BB10-2AA0
	• Industrial Ethernet cable RJ45 / RJ45	10 m	6XV1870-3QN10
	• Industrial Ethernet connecting cable M12-180 / RJ45	2 m	6XV1871-5TH20
		3 m	6XV1871-5TH30
		5 m	6XV1871-5TH50
	• Industrial Ethernet cable by the meter, green (minimum 20 m)		6XV1840-2AH10
	• Connecting cable reader ↔ CM M12-180 / M12-180	2 m	6GT2891-4FH20
		5 m	6GT2891-4FH50
		10 m	6GT2891-4FN10
		20 m	6GT2891-4FN20
		50 m	6GT2891-4FN50
Wide-range power supply unit for SIMATIC RF systems			
	• With EU plug		6GT2898-0AC00
	• With UK plug		6GT2898-0AC10
	• With US plug		6GT2898-0AC20

Product		Article number
24 V connecting cable reader ↔ wide-range power supply unit		
	• with plug, 5 m	6GT2891-0PH50
	• with open ends, 2 m	6GT2891-4EH20
	• with open ends, 5 m	6GT2891-4EH50
DVD "Ident Systems Software & Documentation"		6GT2080-2AA20

5.4.1.3 Pin assignment of the DI/DQ interface (X10 DI/DQ)

Table 5- 25 Pin assignment of the DI/DQ interface (reader end)

View of interface (M12 socket, 12-pin)	Pin	Pin assignment
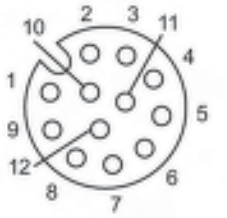	1	GND (output to supply of the digital inputs/outputs [not galvanically isolated])
	2	VCC (output to the supply of the digital inputs/outputs [not galvanically isolated])
	3	DO Common / Output Common
	4	DO 0 / Output 00
	5	DO 1 / Output 01
	6	DO 2 / Output 02
	7	DO 3 / Output 03
	8	DI 0 / Input 00
	9	DI Common / Input Common
	10	DI 1 / Input 01
	11	DI 2 / Input 02
	12	DI 3 / Input 03

Note

Requirement for external power sources

When the DI/DQ interface is supplied with power by an external power source, this source must meet the requirements for LPS (Limited Power Sources) and NEC Class 2.

Color scheme of the DI/DQ standard cable with M12 connector

The following figure shows the color scheme of the DI/DQ standard cable from Siemens (6GT2891-0CH50). You can use the color scheme to assign the wire colors to the pins.

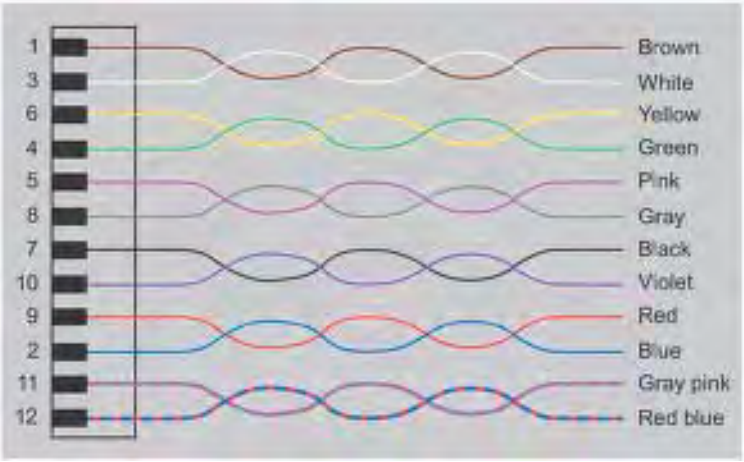

Figure 5-15 Wiring diagram: M12 connector

5.4.1.4 Switching scheme for the DI/DQ interface

Connection possibilities

You can connect the reader in different ways. In general, the outputs and inputs should be connected as follows:

Output (DO 0 ... 3)

- Each output is rated for 0.5 A current and is electronically protected.
- 4 digital outputs can be operated simultaneously each with up to 0.5 A (up to 1 A in total). With a total current > 1 A, you need to use an external power supply.
- The outputs are optically isolated through optocouplers.

input (DI 0 ... 3)

- The inputs are optically isolated through optocouplers.
- Level
  - Low: 0 ... 7 V
  - High: 15 ... 24 V

The following diagrams illustrate various connection possibilities.

Note

Minimum time between changes

Note that changes on the DI/DQ interface that are not applied for at least 1.5 seconds are not detected by the reader.

Voltage infeed from internal source (no electrical isolation)

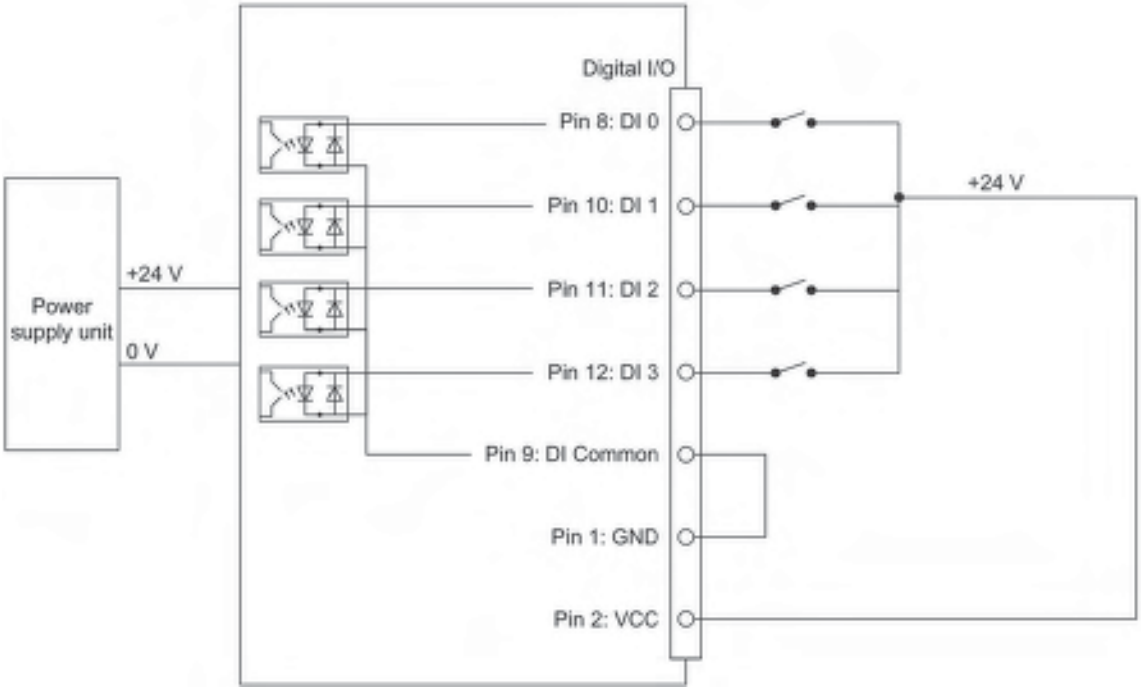

Figure 5-16 Circuit example 1: Digital inputs

Alternative connection possibilities:

- Pin 2 (VCC) to Pin 9 DI Common
- Pin 1 GND to busbar inputs

Voltage infeed from external source

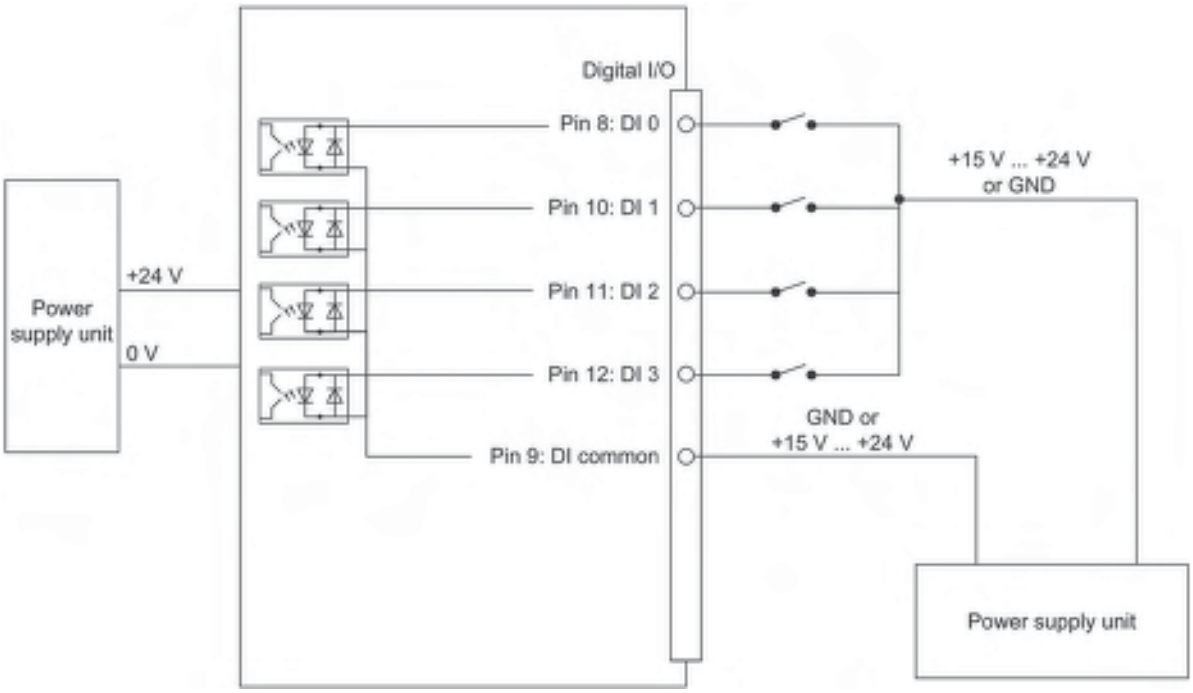

Figure 5-17 Circuit example 2: Digital inputs

Voltage infeed from external source with various voltages

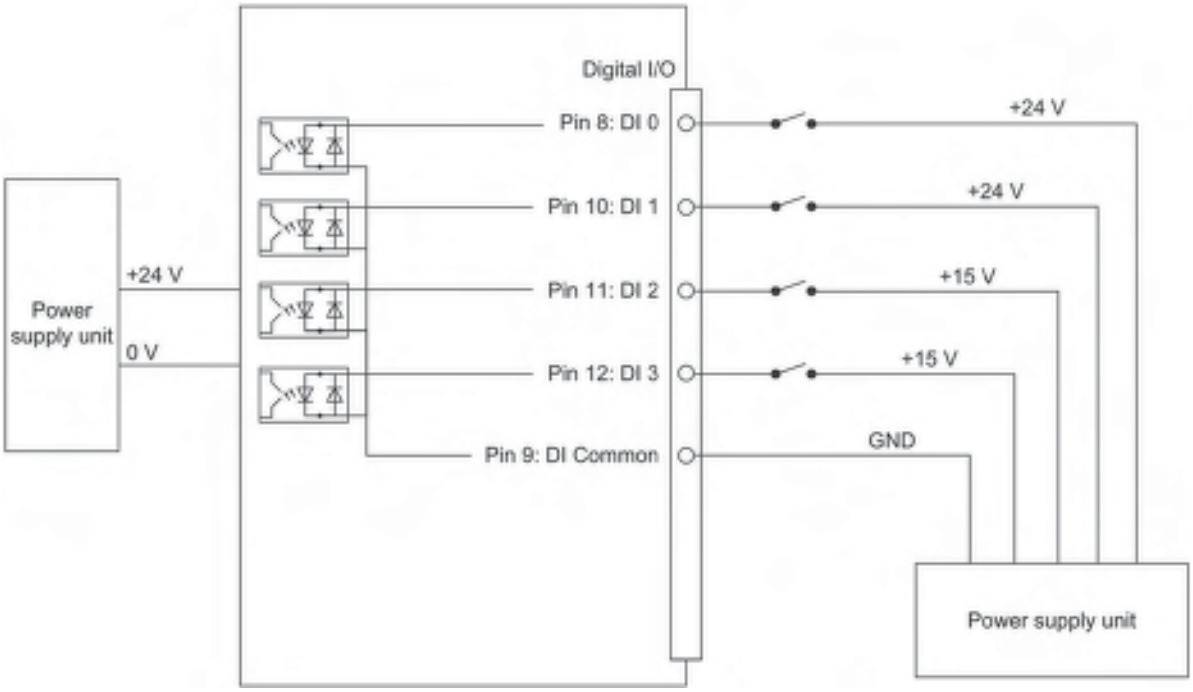

Figure 5-18 Circuit example 3: Digital inputs

Voltage infeed from internal source

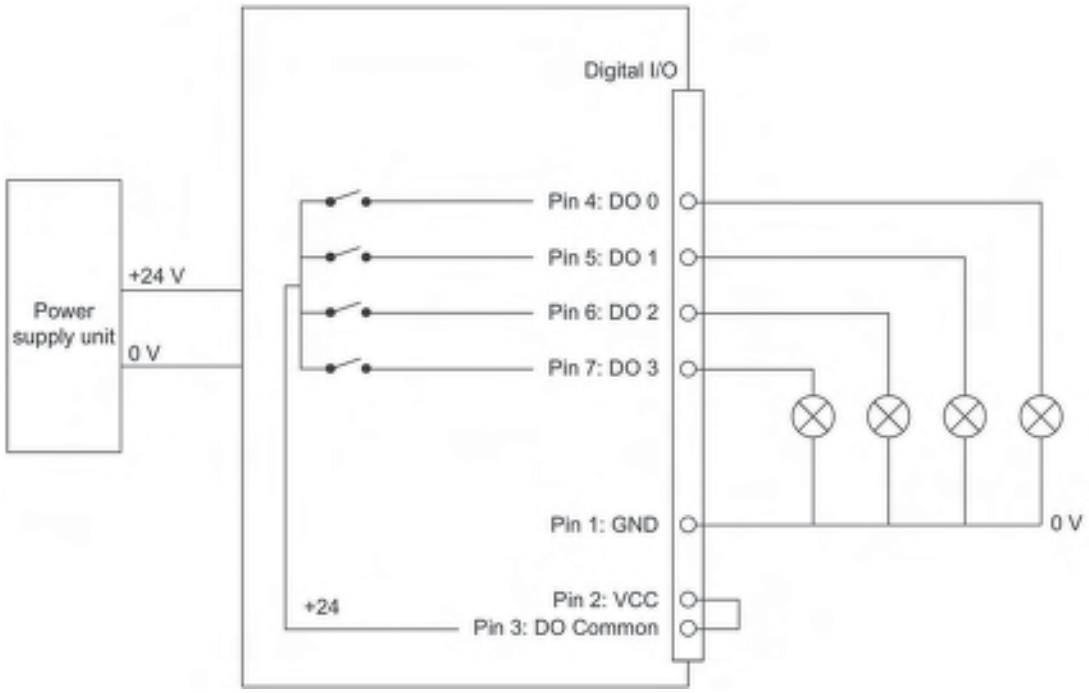

Figure 5-19 Circuit example 4: Digital outputs

Alternative connection possibilities:

- Pin 1 GND to Pin 3 DO Common
- Pin 2 (VCC) to busbar outputs

Voltage infeed from external source

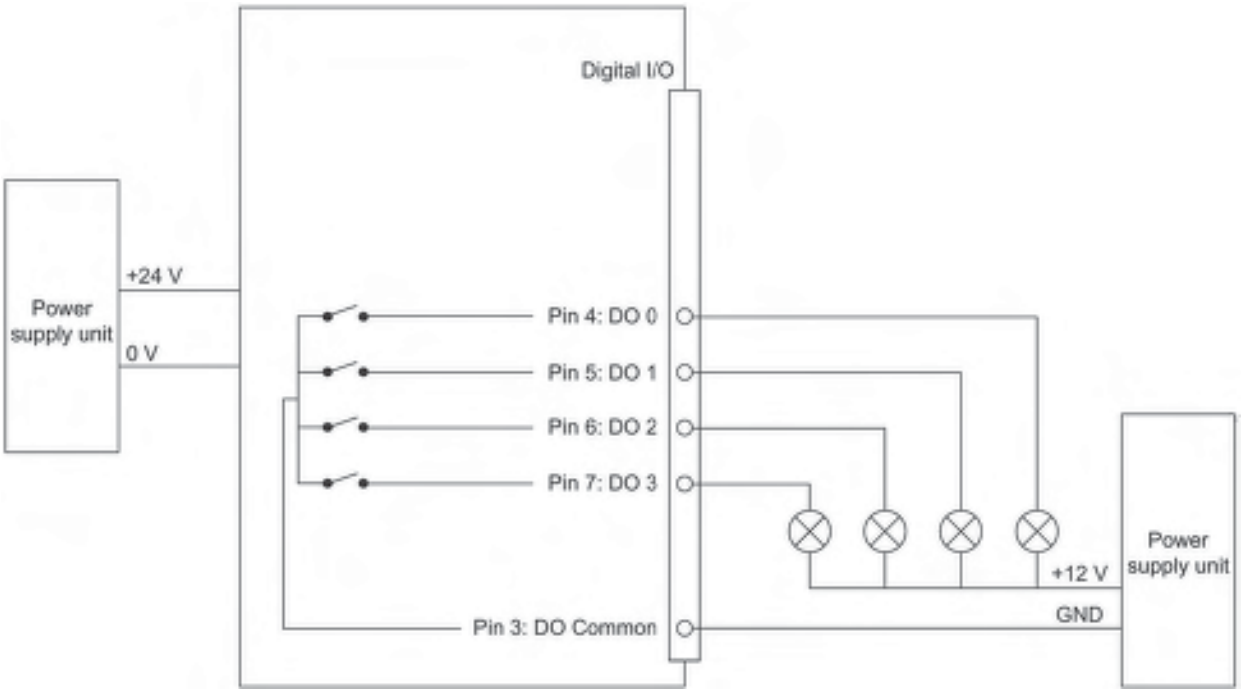

Figure 5-20 Circuit example 5: Digital outputs

Voltage infeed from an external source is shown here for 12 V as an example. Other voltages are also permissible.

Voltage infeed from external source with various voltages

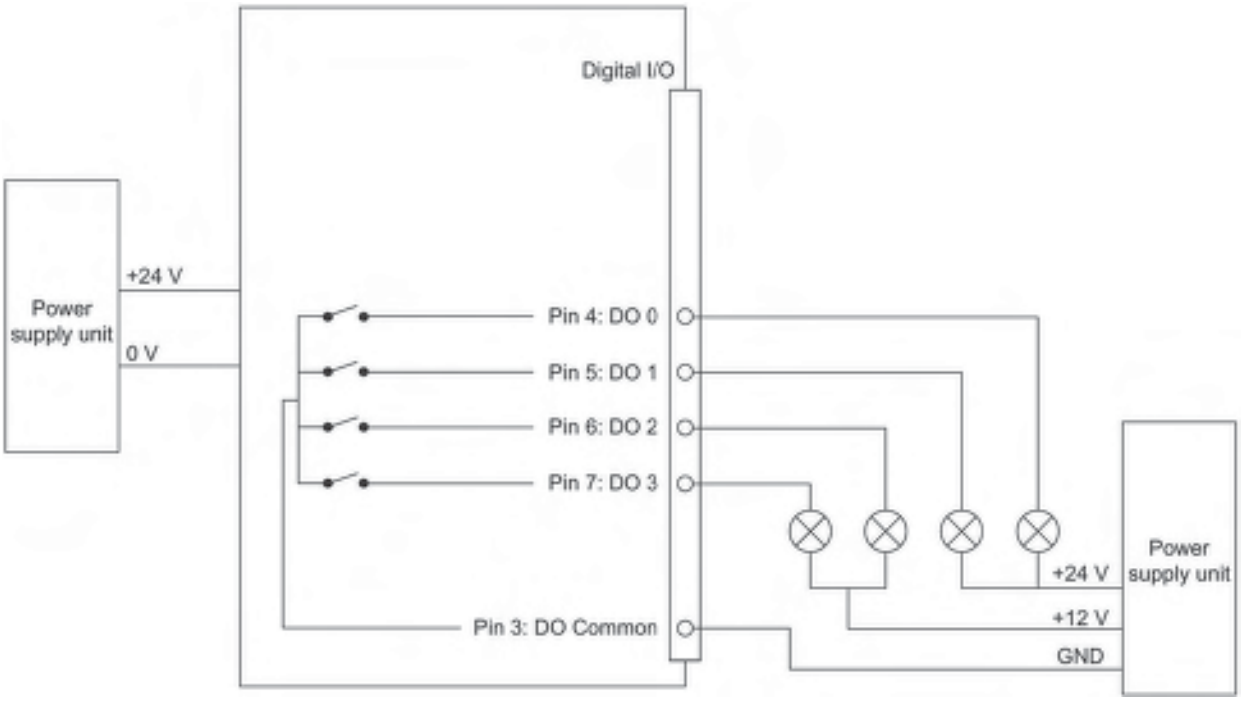

Figure 5-21 Circuit example 6: Digital outputs

5.4.1.5 Pin assignment of the power supply interface (X80 24VDC)

Table 5- 26 Pin assignment of the RS422 interface (reader end)

View of interface (M12 socket, 8-pin)	Pin	Wire colors	Assignment
	1	White	+ 24 V
	2 [1]	Brown	- Tx
	3	Green	0 V
	4 [1]	Yellow	+ Tx
	5 [1]	Gray	+ Rx
	6 [1]	Pink	- Rx
	7	--	Unassigned
	8	--	Earth (shield)

[1] These pins are not required if the reader is operated via Ethernet.

Note

Requirement for external power sources

The reader must only be supplied with power by power supply units that meet the requirements of LPS (Limited Power Source) and NEC Class 2.

Requirement for external power sources

The reader must only be supplied with power by power supply units that meet the requirementsof limited power source (LPS) and NEC Class 2.

Spécification des sources de tension externes

L'alimentation du plot de lecture/écriture doit être exclusivement assurée par des blocs d'alimentation conformes aux spécifications des sources à puissance limitée (Limited Power Sources LPS) et de NEC class 2.

Notes on connectors and cables

The cables with open cable ends (6GT2891-4EH20, 6GT2891-4EH50) have an 8-pin M12 plug at one end, while the other end of the cable is "open". There are 8 color-coded single wires there for connecting to external devices.

The product range includes additional cables of the type 6GT2891-4Fxxx (2 to 50 m) with an M12 connector at both ends. These cables can be used as extension cables. Long cables can be shortened if necessary.

NOTICE

Insulate unused single wires

Unused single wires must be insulated individually to prevent unwanted connections of signal lines.

NOTICE

For long cables: Adapt the power supply and transmission speed

Note that even with long cables, the supply voltage of 24 VDC must always be guaranteed. Note also that the transmission speed on the serial interface must, if necessary, be reduced.

SIMATIC standard cables (e.g. 6GT2891-4FN10) have a loop resistance of 160 mOhm / meter. This results in a voltage drop of 0.8 volts on the 24 V cable for every 10 meters of connecting cable and with a power requirement of 500 mA. If the power requirement increases through the use of the digital inputs/outputs, the voltage drop increases accordingly.

5.4.1.6 Pin assignment of the Industrial Ethernet interface (X1 P1)

Table 5- 27 Pin assignment of the Industrial Ethernet interface (reader end)

View of interface (RJ45 socket, 8-pin)	Pin	Pin assignment
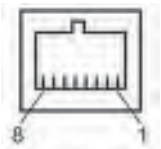	1 2 3 4 5 6 7 8	Transmit Data (+) Transmit Data (-) Receive Data (+) Terminated Terminated Receive Data (-) Terminated Terminated

Note

Use of Siemens cables

We recommend that you only use original Siemens cables and connectors (refer to the section "Ordering data (Page 146)") to connect to the Ethernet socket of the reader. If plug-in connectors from other manufacturers are used, it may be difficult or even impossible to remove the plug from the reader.

5.4.1.7 Grounding connection

On the top of the reader there is a blind drill hole (M4 x 8) for grounding. Tighten the screw with a torque of ≈ 1.5 Nm.

WARNING

Hazardous voltage due to lightning strikes

Death or serious injury may occur as a result of lightning strikes to antennas mounted outside buildings.

If the reader is operated with antennas mounted outside buildings, it is imperative that the reader is electrically connected to the ground potential.

NOTICE

Installation only in protected areas

The antenna can be installed in the protected part of a building. When implementing your lightning protection concept, make sure you adhere to the VDE 0182 or IEC 62305 standards.

Ground connection		
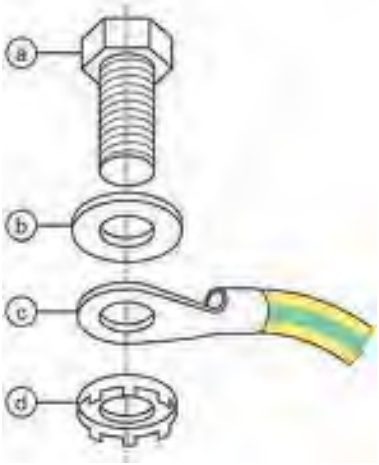	(a)	Screw (M4 x 8)
	(b)	Flat washer
	(c)	Cable lug
	(d)	Contact washer

5.4.2 Planning operation

5.4.2.1 Antenna/read point configurations

You can connect up to four external antennas to the RF650R reader. The standard setting is that an antenna is connected when the reader is started. When connecting multiple antennas, note the information in the section "Specified minimum and maximum spacing of antennas (Page 46)".

With the WBM, you can set up various different configurations of antennas and/or reading points as required. Based on the number of data sources and subsequent assignment of the antennas, many tasks can be accomplished.

Examples of possible antenna reading point configurations

- Four data sources each with one antenna for four different reading points.
- Two data sources each with two antennas for small portals.
- One data source with 4 antennas for large portals.

You will find further information in the online help of the products.

5.4.3 Installation/mounting

Requirement

NOTICE
Close unused connectors Note that the readers only have the specified degree of protection when all connectors are in use or when unused connectors are closed with the protective caps.

⚠ CAUTION
Emitted radiation The transmitter complies with the requirements of Health Canada and the FCC limit values for subjecting persons to HF radiation, provided that a minimum spacing of 26 cm exists between antenna and person. When the antennas are installed, you must therefore ensure that a minimum spacing of 26 cm is maintained between personnel and antennas.

Mounting/installing the device

You can mount the reader in the following ways:

- DIN rail T35 (S7-1200)
- S7-300 standard rail
- S7-1500 standard rail
- directly on a flat surface using the VESA 100 mounting system (torque ≈ 1.5 Nm).

  The positions of the mounting holes for the device are shown in the section Dimension drawing (Page 165).

Mounting the reader on a DIN/standard rail

Table 5- 28 DIN rail mounting

	Description	
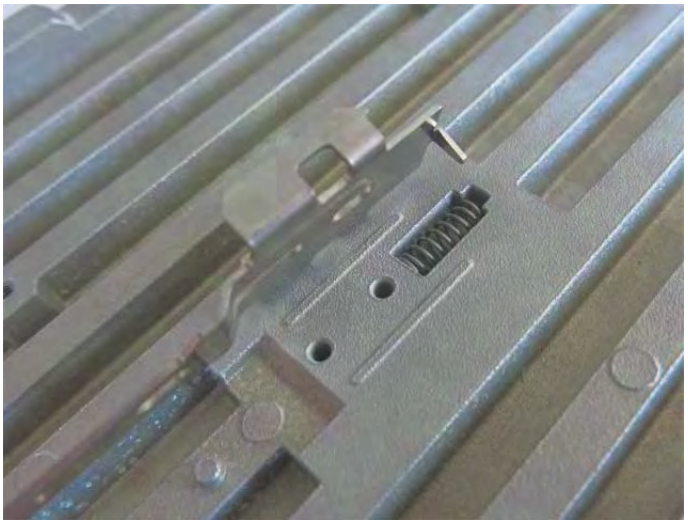	1.	Place the spring in the groove.
	2.	Mount the holder using the supplied Torx screws. When mounting the holder, make sure that the angled tip is positioned above the spring in the groove.

	Description	
	3.	Fit the lower part of the locking mechanism of the reader into the DIN rail. To be able to mount the reader on or remove it from the DIN rail, pull down the holder mounted in step 2.

Table 5- 29 Installation on a standard rail

	Description	
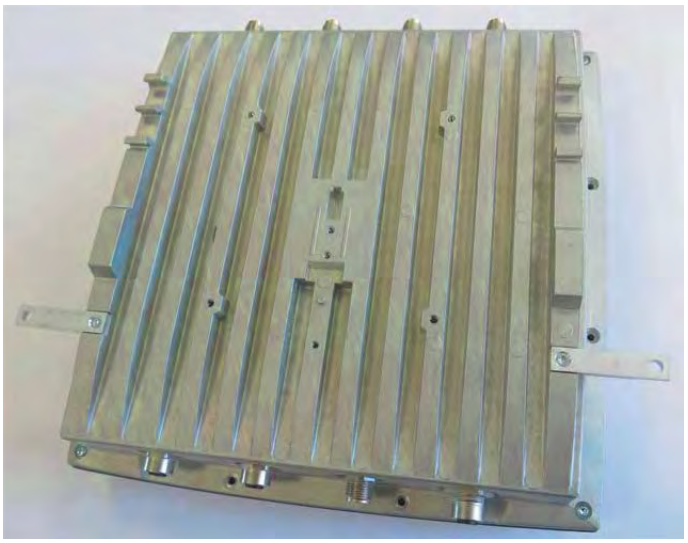	1.	Mount the two adapter pieces using the supplied Torx screws.
	2.	Fit the upper part of the locking mechanism of the reader into the standard rail.
	3.	Secure the reader using the supplied slotted-head screws.

5.4.4 Configuration/integration

An Ethernet interface is available for integrating the device into system environments/networks. The RF650R can be configured via the Ethernet interface and with direct connection to the PC. You can configure and program the reader using the following tools:

- using Web Based Management (WBM)
- OPC UA or XML based user applications

Note that configuration in parallel is not possible using different tools. Simple process controls (e.g. a traffic signal) can be implemented directly using the reader via four digital inputs/outputs.

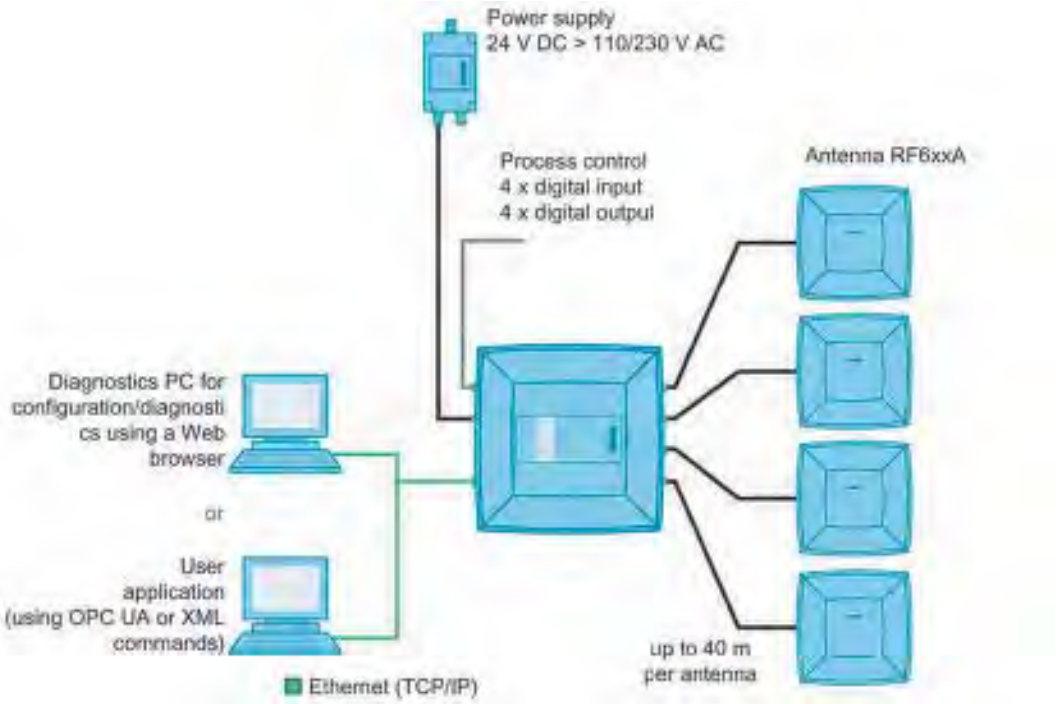

Figure 5-22 Overview: Configuration of RF650R readers

5.4.5 Technical specifications

Table 5- 30 Technical specifications of the RF650R reader

	6GT2811-6AB20-xAA0
Product type designation	SIMATIC RF650R
Radio frequencies	
Operating frequency	
• ETSI	• 865 to 868 MHz
• FCC	• 902 to 928 MHz
• CMIIT	• 920 to 925 MHz
• ARIB (STD-T107)	• 920.4 to 923.4 MHz
Transmit power [1)]	
• ETSI	• 3 to 1000 mW
• FCC	• 3 to 1000 mW
• CMIIT	• 3 to 1000 mW
• ARIB (STD-T107)	• 3 to 250 mW
Maximum radiated power per antenna	
• ETSI	• 2000 mW ERP
• FCC	• 4000 mW EIRP
• CMIIT	• 2000 mW ERP
• ARIB (STD-T107)	• 500 mW EIRP
Electrical data	
Range	
• ETSI	• ≤ 8 m
• FCC	• ≤ 8 m
• CMIIT	• ≤ 8 m
• ARIB (STD-T107)	• ≤ 4 m
Protocol	ISO 18000-62/-63
Transmission speed	≤ 300 kbps
Frequency accuracy	≤ ±10 ppm

	6GT2811-6AB20-xAA0
Channel spacing	
• ETSI	• 600 kHz
• FCC	• 500 kHz
• CMIIT	• 250 kHz
• ARIB (STD-T107)	• 200 kHz
Modulation methods	ASK: DSB modulation & PR-ASK modulation encoding, Manchester or Pulse Interval (PIE)
Multitag capability	Yes
Typical transmission time per byte	
• Write access	• 2 ms
• Read access	• 0.15 ms
Supply voltage	24 V DC (20 ... 30 V DC) [2)]
Maximum permitted current consumption	2 A
Maximum permitted current consumption via DI/DQ interface	1 A
Current consumption (on standby), typical	
• 20 V input voltage on the reader	• 220 mA / 4.4 W
• 24 V input voltage on the reader	• 190 mA / 4.5 W
• 30 V input voltage on the reader	• 150 mA / 4.5 W
Current consumption (at 1000 mW transmit power), typical	
• 20 V input voltage on the reader	• 450 mA / 9.0 W
• 24 V input voltage on the reader	• 370 mA / 8.9 W
• 30 V input voltage on the reader	• 300 mA / 9.0 W
Current consumption (at 2000 mW transmit power), typical	
• 20 V input voltage on the reader	• 610 mA / 12.2 W
• 24 V input voltage on the reader	• 500 mA / 12.0 W
• 30 V input voltage on the reader	• 410 mA / 12.3 W

Interfaces	
Antenna connectors	4x RP-TNC
Power supply	1x M12 (8-pin)
DI/DQ interface	1x M12 (12-pin)
Digital inputs	4
Digital outputs	4
Ethernet interface	1x RJ45 (8-pin), 100 Mbps

	6GT2811-6AB20-xAA0
Mechanical specifications	
Material	
• Upper part of housing	• Pocan (silicone-free)
• Lower part of housing	• Aluminum
Color	
• Upper part of housing	• TI-Grey
• Lower part of housing	• Silver
Permitted ambient conditions	
Ambient temperature	
• During operation	• -25 ... +55 °C
• During transportation and storage	• -40 ... +85 °C
Degree of protection	IP30
Shock resistant to EN 60068-2-27	25.5 g [3)]
Vibrations according to EN 60068-2-6	3.1 g [3)]
Design, dimensions and weight	
Dimensions (W × H × D)	258 × 258 × 80 mm
Weight	2.4 kg
Type of mounting	
• Mounting rail	• Hanging
• VESA 100	• 4x M4 screws (≈ 1.5 Nm)
Operation indicator	6 LEDs
Status display	-
Standards, specifications, approvals	
Proof of suitability	EN 301 489-1 V1.9.2 / EN 301 489-3 V1.6.1 / EN 302 208-1/-3 V1.4.1 FCC CFR 47, Part 15 section 15.247
MTBF	31 years

1) Measured at the output of the antenna socket.

2) All supply and signal voltages must be safety extra low voltage (SELV/PELV according to EN 60950). The voltage sources must meet the requirements of limited power sources (LPS) and NEC Class 2.

Note that, depending on the power consumption, using extension cables > 20 m (6GT2891-4FN50) may lead to a voltage drop on the reader. This voltage drop can mean that the necessary minimum voltage on the reader is below the required 20 V.

3) The values for shock and vibration are maximum values and must not be applied continuously. These values only apply to mounting using screws.

5.4.6 Dimension drawing

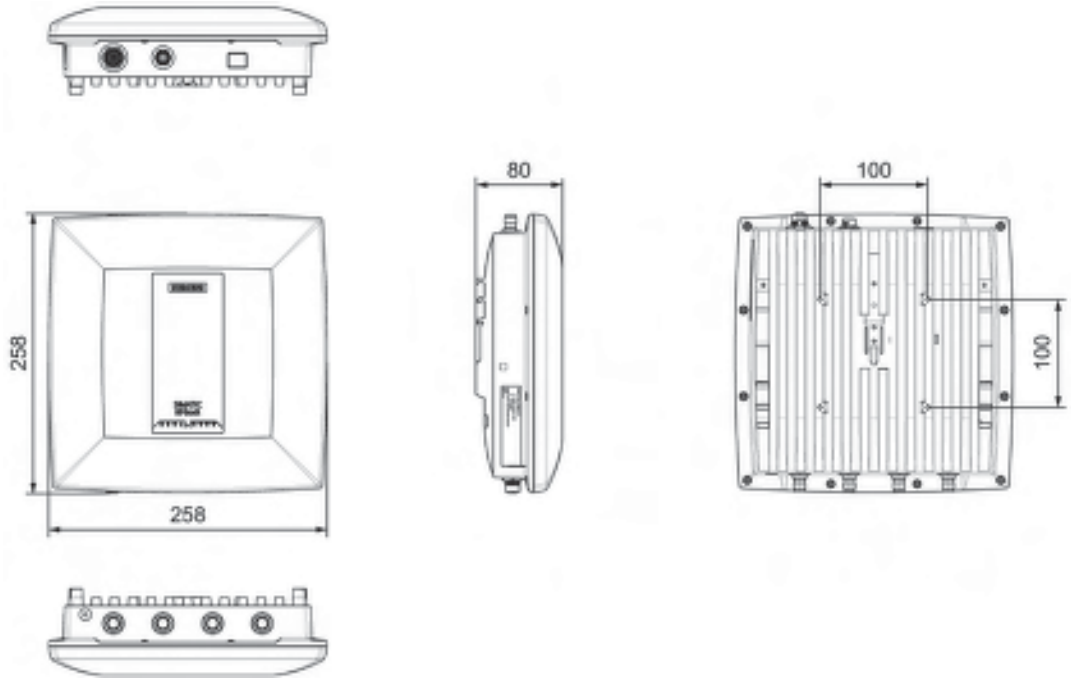

Figure 5-23 Dimension drawing RF650R

All dimensions in mm (± 0.5 mm tolerance)

5.4.7 Certificates and approvals

Note

Marking on the readers according to specific approval

The certificates and approvals listed here apply only if the corresponding mark is found on the readers.

Table 5- 31 6GT2811-6AB20-0AA0

Labeling	Description
CE	Conformity with the RED directive 2014/53/EU Conformity with the RoHS directive 2011/65/EU
ICASA	South Africa radio approval: Radio Equipment Type Approval
India	India wireless approval Marking on the reader: No. NR-ETA/1587
EAC	Radio approval for Russia, Belarus, Kazakhstan

Table 5- 32 6GT2811-6AB20-1AA0

Labeling	Description
FC Federal Communications Commission	FCC CFR 47, Part 15 section 15.247 Radio Frequency Interference Statement This equipment has been tested and found to comply with the limits for a Class B digital device, pursuant to Part 15 of the FCC Rules. FCC ID: NXW-RF600R2
Industry Canada Radio Standards Specifications	RSS-247 Issue 2 IC: 267X-RF600R2
UL C US	This product is UL-certified for the USA and Canada. It meets the following safety standard(s): UL 60950-1 - Information Technology Equipment Safety - Part 1: General Requirements CSA C22.2 No. 60950 -1 - Safety of Information Technology Equipment UL Report E 115352

Labeling	Description
	Brazil radio approval Marking on the reader (6GT2811-6AB20-1AA0): Statement about approval: Este equipamento opera em caráter secundário, isto é, não tem direito à proteção contra interferência prejudicial, mesmo de estações do mesmo tipo e não pode causar interferência a sistemas operando em caráter primário. Reader certificate: ANATEL 2892-15-4794
	KCC Certification Type of equipment: A급 기기 (업무용 방송통신기자재) Class A Equipment (Industrial Broadcasting & Communication Equipment) 이 기기는 업무용(A급) 전자파적합기기로서 판 매자 또는 사용자는 이 점을 주의하시기 바라 며, 가정외의 지역에서 사용하는 것을 목적으로 합니다. This equipment is Industrial (Class A) electromagnetic wave suitability equipment and seller or user should take notice of it, and this equipment is to be used in the places except for home. Certificate of the reader: MSIP-CMM-RF5-RF650R
C-14627	Argentina radio approval: Registro de la COMISION NACIONAL DE COMUNICACIONES
RCPSISI14-1926	Mexico radio approval: CERTIFICADO DE HOMOLOGACION, IFETEL
	Australia radio approval: This product meets the requirements of the AS/NZS 3548 Norm.

Table 5- 33 6GT2811-6AB20-2AA0

Standard	

Standard	
CMIIT Certification	China radio approval Marking on the reader: CMIIT ID: 2014DJ3987

5.4.7.1 FCC information

Siemens SIMATIC RF650R (FCC): 6GT2811-6AB20-1AA0

FCC ID: NXW-RF600R2

This device complies with part 15 of the FCC rules. Operation is subject to the following two conditions:

(1) This device may not cause harmful interference, and

(2) this device must accept any interference received, including interference that may cause undesired operation.

Caution

Any changes or modifications not expressly approved by the party responsible for compliance could void the user's authority to operate the equipment.

Note

This equipment has been tested and found to comply with the limits for a Class B digital device, pursuant to part 15 of the FCC Rules.

These limits are designed to provide reasonable protection against harmful interference when the equipment is operated in a commercial environment. This equipment generates, uses, and can radiate radio frequency energy and, if not installed and used in accordance with the instruction manual, may cause harmful interference to radio communications. Operation of this equipment in a residential area is likely to cause harmful interference in which case the user will be required to correct the interference at his own expense.

FCC Notice

To comply with FCC part 15 rules in the United States, the system must be professionally installed to ensure compliance with the Part 15 certification.

It is the responsibility of the operator and professional installer to ensure that only certified systems are deployed in the United States. The use of the system in any other combination (such as co-located antennas transmitting the same information) is expressly forbidden.

FCC Exposure Information

To comply with FCC RF exposure compliance requirements, the antennas used for this transmitter must be installed to provide a separation distance of at least 20 cm from all persons and must not be co-located or operating in conjunction with any other antenna or transmitter.

5.4.7.2 IC-FCB information

Siemens SIMATIC RF650R (FCC): 6GT2811-6AB20-1AA0

IC: 267X-RF600R2

This device complies with Industry Canada licence-exempt RSS standard(s). Operation is subject to the following two conditions:

(1) This device may not cause interference, and

(2) this device must accept any interference, including interference that may cause undesired operation of the device.

Le présent appareil est conforme aux CNR d`Industrie Canada applicables aux appareils radio exempts de licence. L`exploitation est autorisée aux deux conditions suivantes :

(1) L`appareil ne doit pas produire de brouillage, et

(2) l'utilisateur de l`appareil doit accepter tout brouillage radioélectrique subi, même si le brouillage est susceptible d`en compromettre le fonctionnement.

Industry Canada Notice

To reduce potential radio interference to other users, the antenna type and its gain should be so chosen that the equivalent isotropically radiated power (e.i.r.p.) is not more than that permitted for successful communication.

Transmitter power and antenna information for antennas with a gain less than 6 dBi:

This device has been designed to operate with the SIMATIC RF620A antenna 902-928, the SIMATIC RF640A antenna 902-928 as well as the SIMATIC RF660A antenna 902-928 listed below, and having a maximum gain of 5,5 dBi.

Arbitrary transmission power settings in combination with other antennas or antennas having a gain greater than 5,5 dBi are strictly prohibited for use with this device.

The required antenna impedance is 50 Ohms.

Transmitter power and antenna information for antennas with a gain greater 6 dBi:

This device requires professional installation. Antennas with a gain greater 6 dBi may be used provided the system does not exceed the radiation power of 4000 mW E.I.R.P. This device has been designed to operate with the SIMATIC RF642A antenna 902-928 exceeding the maximum gain of 5,5 dBi under the restriction that the RF power at the input of the antenna must be set to meet the following relation: RF power (dBm) ≤ 30 dBm – (antenna gain (dBi) – 6 dBi) Other antennas or system configurations for antennas having a gain greater than 6 dBi are strictly prohibited for use with this device. The required antenna impedance is 50 Ohms.

5.5 SIMATIC RF680R

5.5.1 Description

5.5.1.1 Overview

The SIMATIC RF680R is a stationary reader in the UHF frequency band without an integrated antenna. Up to four external UHF RFID antennas can be connected via RP-TNC connectors.

The maximum transmit power is 2000 mW at the reader output. A radiated power of up to 2000 mW ERP / 4000 mW EIRP is achieved when the appropriate antennas and antenna cables are used. The interfaces (Ethernet, power supply, DI/DQ interface) are located on the lower front edge. These interfaces can be used to connect the reader to the power supply and to a PC or a controller for parameter assignment.

The degree of protection is IP65.

	Pos.	Description
	①	RP-TNC interfaces for connecting up to 4 external antennas
	②	LED status display
	③	LED operating display
	④	DI/DQ interface: X10 DI/DQ (M12, 12-pin)
	⑤	Interface to power supply (RS422), 24 V DC [1]: X80 DC24V (M12, 8-pin)
	⑥	Ethernet interface, TCP/IP: X1 P1 (M12, 4-pin)
	⑦	Ethernet interface, TCP/IP: X1 P2 (M12, 4-pin)

[1]) Connection of the readers to the ASM 456 communications module via the RS-422 interface.

5.5.1.2 Ordering data

Table 5- 34 Ordering data RF680R

Product	Article number
RF680R (ETSI)	6GT2811-6AA10-0AA0
RF680R (FCC)	6GT2811-6AA10-1AA0
RF680R (CMIIT)	6GT2811-6AA10-2AA0
RF680R (ARIB)	6GT2811-6AA10-4AA0

Table 5- 35 Ordering data accessories

Product			Article number
Holder set for securing the reader • DIN rail T35 (S7-1200) • S7-300 standard rail • S7-1500 standard rail			6GT2890-0AB00
SIMATIC antenna holder for RF600 devices			6GT2890-2AB10
Connecting cable and connectors			
	• DI/DQ cable connector open cable ends	5 m	6GT2891-0CH50
	• Ethernet plug on the reader FastConnect M12 (IP65)		6GK1901-0DB20-6AA0
	• Ethernet plug Standard IE FastConnect RJ45 180 (IP20)		6GK1901-1BB10-2AA0
	• Industrial Ethernet cable M12 / RJ45	5 m	6XV1871-5TH50
	• Industrial Ethernet cable M12 / M12	5 m	6XV1870-8AH50
	• Industrial Ethernet connecting cable M12-180 / RJ45	2 m	6XV1871-5TH20
		3 m	6XV1871-5TH30
		5 m	6XV1871-5TH50
	• Industrial Ethernet cable by the meter, green (minimum 20 m)		6XV1840-2AH10
	• Connecting cable reader ↔ CM M12-180 / M12-180	2 m	6GT2891-4FH20
		5 m	6GT2891-4FH50
		10 m	6GT2891-4FN10
		20 m	6GT2891-4FN20
		50 m	6GT2891-4FN50

Product		Article number
Connecting cable CM ↔ reader / extension cable for 24 V connecting cable RS422, M12 connector, 8-pin socket		
	• 2 m	6GT2891-4FH20
	• 5 m	6GT2891-4FH50
	• 10 m	6GT2891-4FN10
	• 20 m	6GT2891-4FN20
	• 50 m	6GT2891-4FN50
Wide-range power supply unit for SIMATIC RF systems		
	• With EU plug	6GT2898-0AC00
	• With UK plug	6GT2898-0AC10
	• With US plug	6GT2898-0AC20
24 V connecting cable reader ↔ wide-range power supply unit		
	• with plug, 5 m	6GT2891-0PH50
	• with open ends, 2 m	6GT2891-4EH20
	• with open ends, 5 m	6GT2891-4EH50
Set of protective caps Contains 3 protective caps for antenna output, one protective cap for digital I/O interface and 2 protective caps for Ethernet/PROFINET (required for IP65 degree of protection when some connectors are unused)		6GT2898-4AA10
DVD "Ident Systems Software & Documentation"		6GT2080-2AA20

5.5.1.3 Pin assignment of the DI/DQ interface (X10 DI/DQ)

Table 5- 36 Pin assignment of the DI/DQ interface (reader end)

View of interface (M12 socket, 12-pin)	Pin	Pin assignment
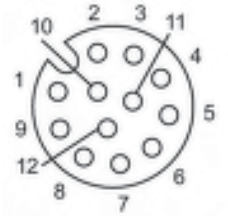	1	GND (output to supply of the digital inputs/outputs [not galvanically isolated])
	2	VCC (output to the supply of the digital inputs/outputs [not galvanically isolated])
	3	DO Common / Output Common
	4	DO 0 / Output 00
	5	DO 1 / Output 01
	6	DO 2 / Output 02
	7	DO 3 / Output 03
	8	DI 0 / Input 00
	9	DI Common / Input Common
	10	DI 1 / Input 01
	11	DI 2 / Input 02
	12	DI 3 / Input 03

Note

Requirement for external power sources

When the DI/DQ interface is supplied with power by an external power source, this source must meet the requirements for LPS (Limited Power Sources) and NEC Class 2.

Color scheme of the DI/DQ standard cable with M12 connector

The following figure shows the color scheme of the DI/DQ standard cable from Siemens (6GT2891-0CH50). You can use the color scheme to assign the wire colors to the pins.

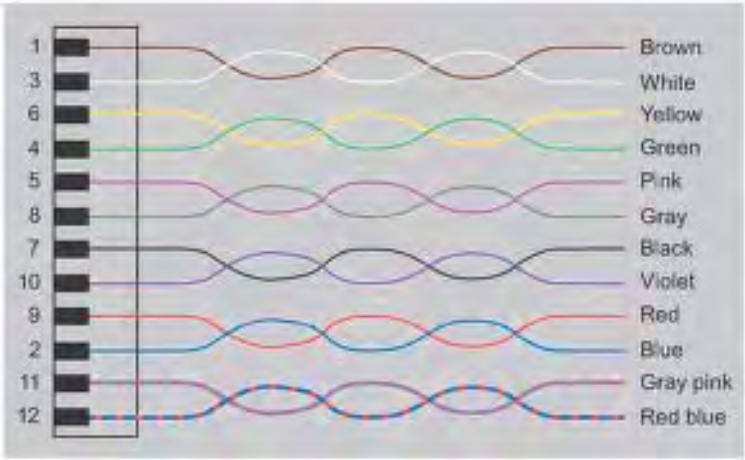

Figure 5-24 Wiring diagram: M12 connector

5.5.1.4 Switching scheme for the DI/DQ interface

Connection possibilities

You can connect the reader in different ways. In general, the outputs and inputs should be connected as follows:

Output (DO 0 ... 3)

- Each output is rated for 0.5 A current and is electronically protected.
- 4 digital outputs can be operated simultaneously each with up to 0.5 A (up to 1 A in total). With a total current > 1 A, you need to use an external power supply.
- The outputs are optically isolated through optocouplers.

input (DI 0 ... 3)

- The inputs are optically isolated through optocouplers.
- Level
  - Low: 0 ... 7 V
  - High: 15 ... 24 V

The following diagrams illustrate various connection possibilities.

Note

Minimum time between changes

Note that changes on the DI/DQ interface that are not applied for at least 1.5 seconds are not detected by the reader.

Voltage infeed from internal source (no electrical isolation)

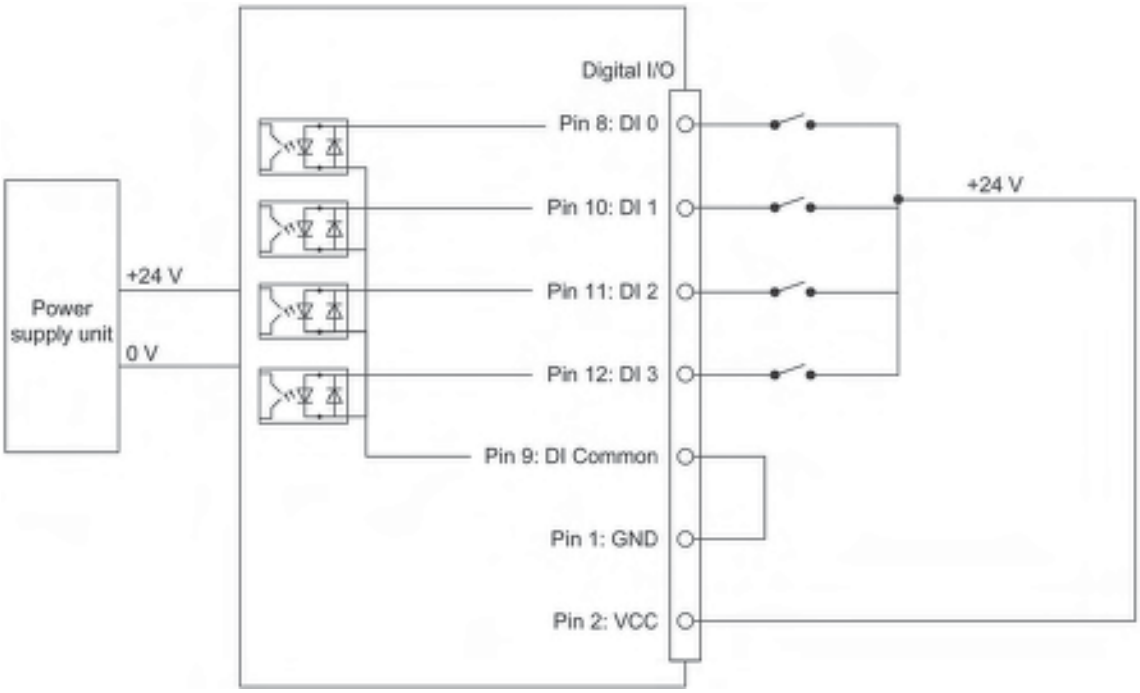

Figure 5-25 Circuit example 1: Digital inputs

Alternative connection possibilities:

- Pin 2 (VCC) to Pin 9 DI Common
- Pin 1 GND to busbar inputs

Voltage infeed from external source

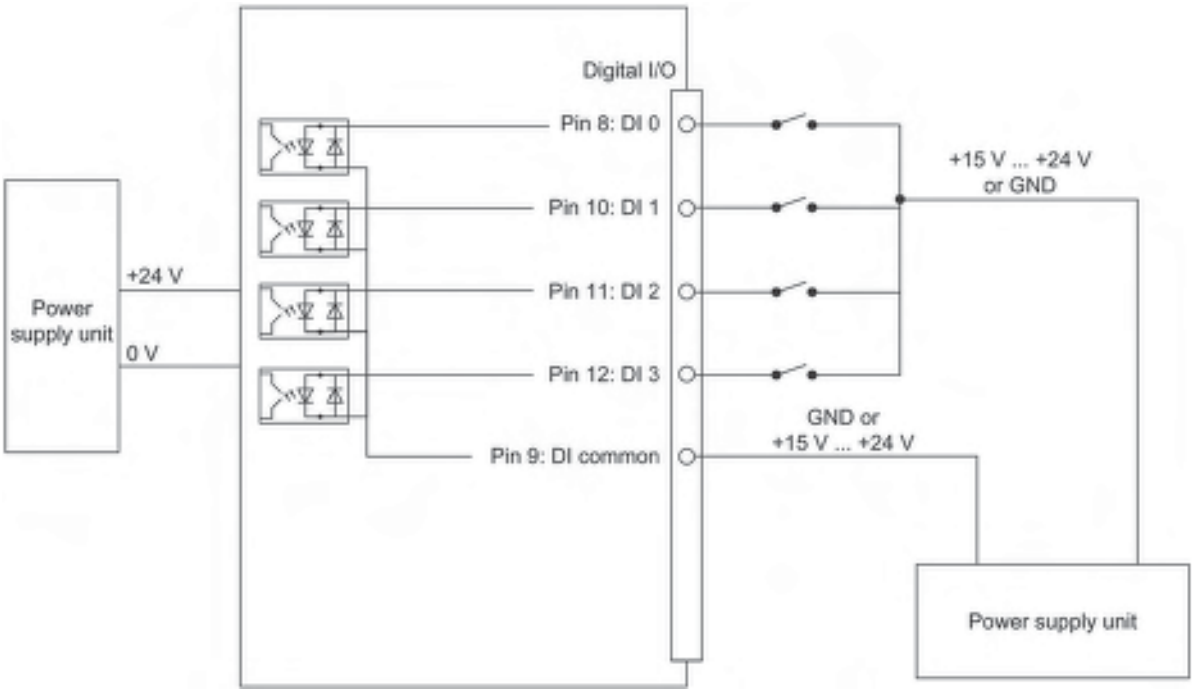

Figure 5-26 Circuit example 2: Digital inputs

Voltage infeed from external source with various voltages

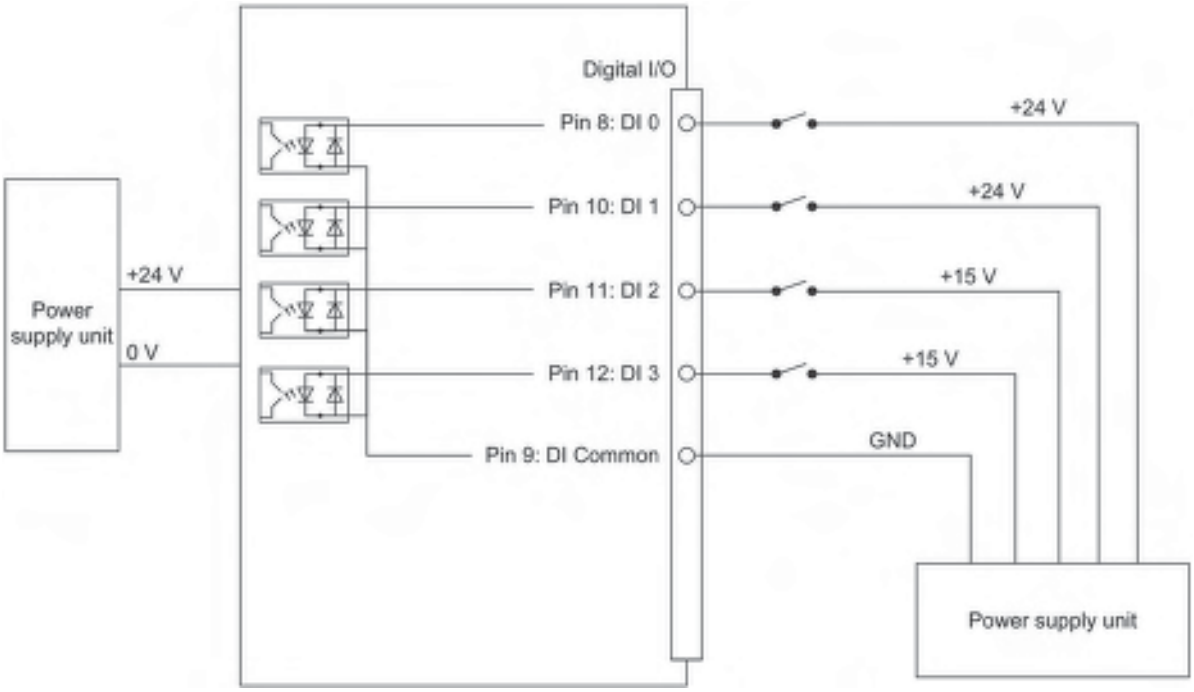

Figure 5-27 Circuit example 3: Digital inputs

Voltage infeed from internal source

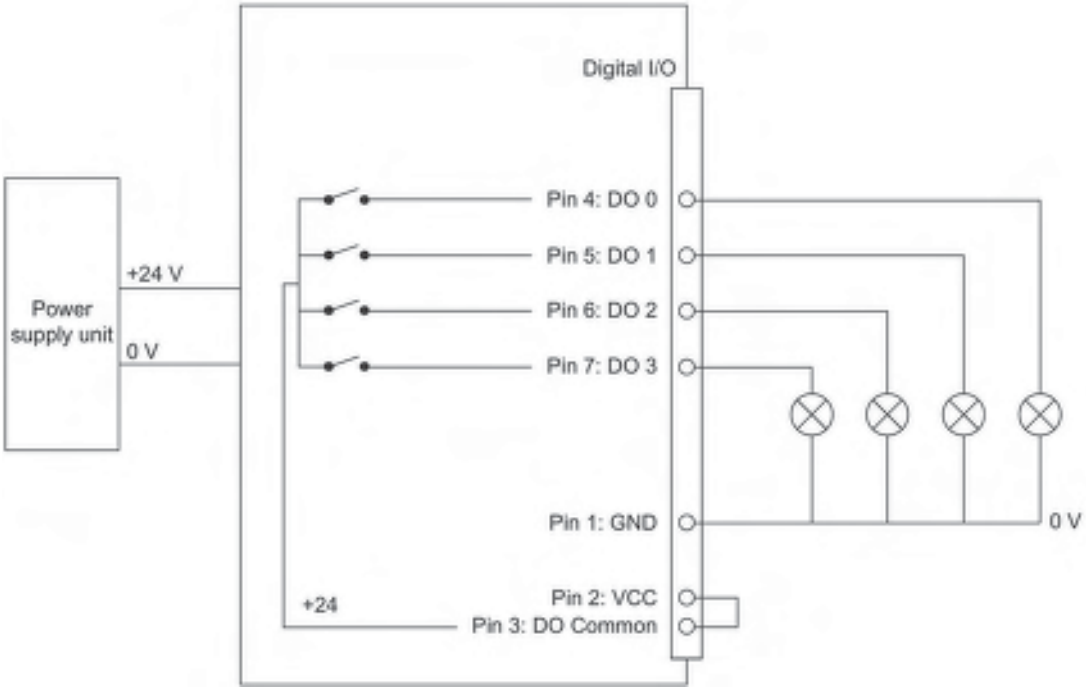

Figure 5-28 Circuit example 4: Digital outputs

Alternative connection possibilities:

- Pin 1 GND to Pin 3 DO Common
- Pin 2 (VCC) to busbar outputs

Voltage infeed from external source

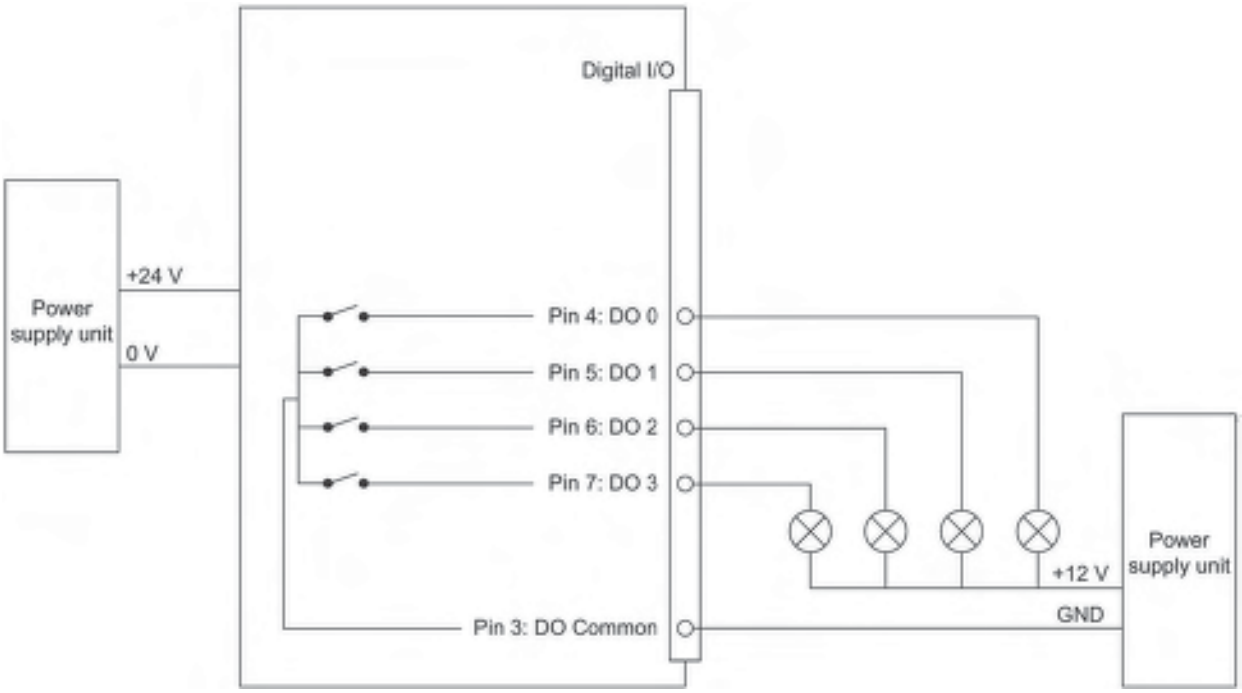

Figure 5-29 Circuit example 5: Digital outputs

Voltage infeed from an external source is shown here for 12 V as an example. Other voltages are also permissible.

Voltage infeed from external source with various voltages

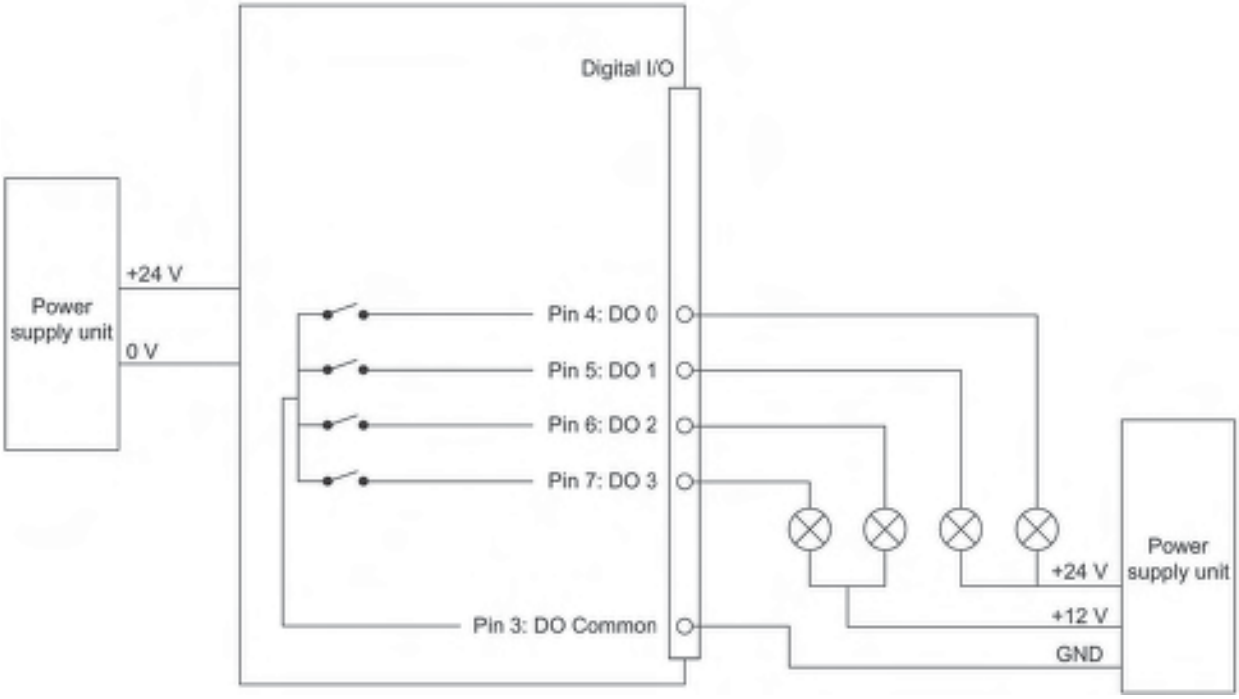

Figure 5-30 Circuit example 6: Digital outputs

5.5.1.5 Pin assignment of the power supply interface (X80 24VDC)

Table 5- 37 Pin assignment of the RS422 interface (reader end)

View of interface (M12 socket, 8-pin)	Pin	Wire colors	Assignment
	1	White	+ 24 V
	2 [1]	Brown	- Tx
	3	Green	0 V
	4 [1]	Yellow	+ Tx
	5 [1]	Gray	+ Rx
	6 [1]	Pink	- Rx
	7	--	Unassigned
	8	--	Earth (shield)

[1] These pins are not required if the reader is operated via Ethernet.

Note

Requirement for external power sources

The reader must only be supplied with power by power supply units that meet the requirements of LPS (Limited Power Source) and NEC Class 2.

Requirement for external power sources

The reader must only be supplied with power by power supply units that meet the requirementsof limited power source (LPS) and NEC Class 2.

Spécification des sources de tension externes

L'alimentation du plot de lecture/écriture doit être exclusivement assurée par des blocs d'alimentation conformes aux spécifications des sources à puissance limitée (Limited Power Sources LPS) et de NEC class 2.

Notes on connectors and cables

The cables with open cable ends (6GT2891-4EH20, 6GT2891-4EH50) have an 8-pin M12 plug at one end, while the other end of the cable is "open". There are 8 color-coded single wires there for connecting to external devices.

The product range includes additional cables of the type 6GT2891-4Fxxx (2 to 50 m) with an M12 connector at both ends. These cables can be used as extension cables. Long cables can be shortened if necessary.

NOTICE

Insulate unused single wires

Unused single wires must be insulated individually to prevent unwanted connections of signal lines.

NOTICE

For long cables: Adapt the power supply and transmission speed

Note that even with long cables, the supply voltage of 24 VDC must always be guaranteed. Note also that the transmission speed on the serial interface must, if necessary, be reduced.

SIMATIC standard cables (e.g. 6GT2891-4FN10) have a loop resistance of 160 mOhm / meter. This results in a voltage drop of 0.8 volts on the 24 V cable for every 10 meters of connecting cable and with a power requirement of 500 mA. If the power requirement increases through the use of the digital inputs/outputs, the voltage drop increases accordingly.

5.5.1.6 Pin assignment of the Industrial Ethernet interface (X1 P1; X1 P2)

Table 5- 38 Pin assignment of the Industrial Ethernet interface (reader end)

View of interface (M12 socket, 4-pin)	Pin	Pin assignment
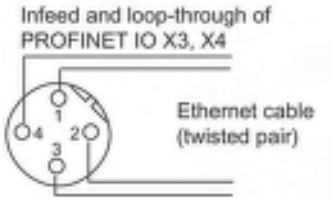	1	Data line +Tx
	2	Data line +Rx
	3	Data line -Tx
	4	Data line -Rx

5.5.1.7 Grounding connection

On the top of the reader there is a blind drill hole (M4 x 8) for grounding. Tighten the screw with a torque of ≈ 1.5 Nm.

WARNING

Hazardous voltage due to lightning strikes

Death or serious injury may occur as a result of lightning strikes to antennas mounted outside buildings.

If the reader is operated with antennas mounted outside buildings, it is imperative that the reader is electrically connected to the ground potential.

NOTICE

Installation only in protected areas

The antenna can be installed in the protected part of a building. When implementing your lightning protection concept, make sure you adhere to the VDE 0182 or IEC 62305 standards.

Ground connection		
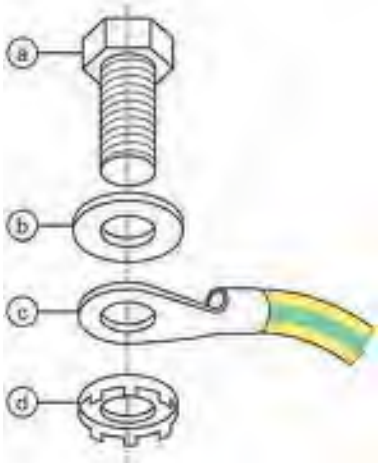	(a)	Screw (M4 x 8)
	(b)	Flat washer
	(c)	Cable lug
	(d)	Contact washer

5.5.2 Planning operation

5.5.2.1 Antenna/read point configurations

You can connect up to four external antennas to the RF680R reader. The standard setting is that an antenna is connected when the reader is started. When connecting multiple antennas, note the information in the section "Specified minimum and maximum spacing of antennas (Page 46)".

With the WBM, you can set up various different configurations of antennas and/or reading points as required. Based on the number of data sources and subsequent assignment of the antennas, many tasks can be accomplished.

Examples of possible antenna reading point configurations

- Four data sources each with one antenna for four different reading points.
- Two data sources each with two antennas for small portals.
- One data source with 4 antennas for large portals.

You will find further information in the online help of the products.

5.5.3 Installation/mounting

Requirement

NOTICE
Close unused connectors Note that the readers only have the specified degree of protection when all connectors are in use or when unused connectors are closed with the protective caps. Close any connectors on the reader that you are not using with protective caps. You can order the protective cap set using the article number specified in the section "Ordering data".

CAUTION
Emitted radiation The transmitter complies with the requirements of Health Canada and the FCC limit values for subjecting persons to HF radiation, provided that a minimum spacing of 26 cm exists between antenna and person. When the antennas are installed, you must therefore ensure that a minimum spacing of 26 cm is maintained between personnel and antennas.

5.5.3.1 Mounting/Installation

Mounting/installing the device

You can mount the reader in the following ways:

- DIN rail T35 (S7-1200)
- S7-300 standard rail
- S7-1500 standard rail
- directly on a flat surface using the VESA 100 mounting system (torque ≈ 1.5 Nm).

  The positions of the mounting holes for the device are shown in the section Dimension drawing (Page 190).

Mounting the reader on a DIN/standard rail

Table 5- 39 DIN rail mounting

	Description	
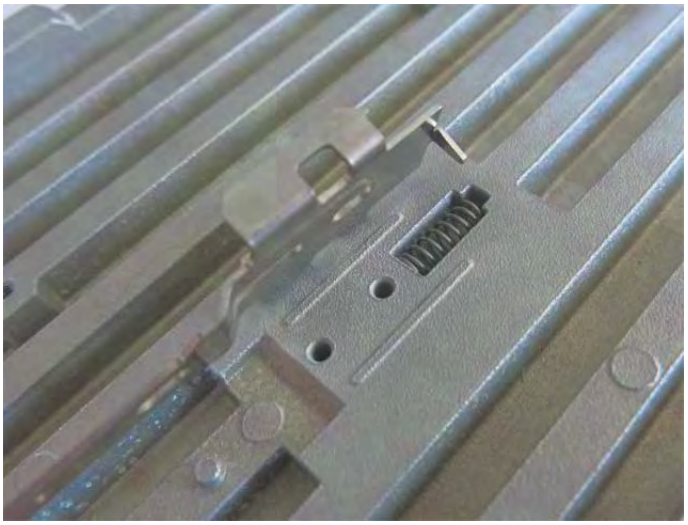	1.	Place the spring in the groove.

	Description	
	2.	Mount the holder using the supplied Torx screws. When mounting the holder, make sure that the angled tip is positioned above the spring in the groove.
	3.	Fit the lower part of the locking mechanism of the reader into the DIN rail. To be able to mount the reader on or remove it from the DIN rail, pull down the holder mounted in step 2.

Table 5- 40 Installation on a standard rail

	Description	
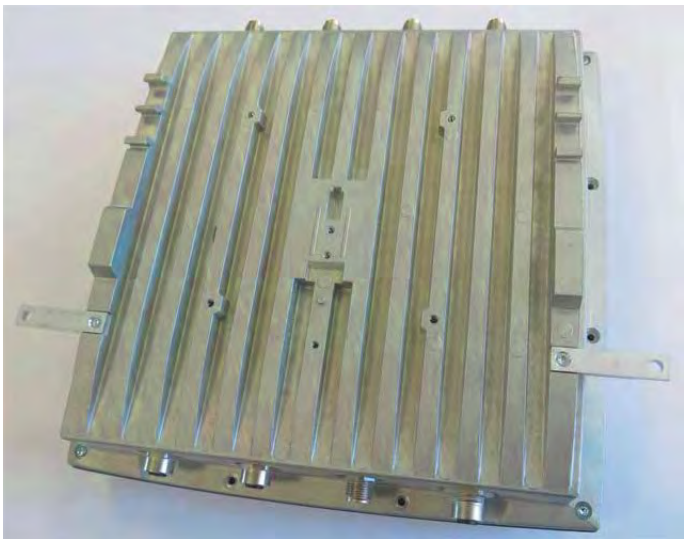	1.	Mount the two adapter pieces using the supplied Torx screws.
	2.	Fit the upper part of the locking mechanism of the reader into the standard rail.
	3.	Secure the reader using the supplied slotted-head screws.

5.5.4 Configuration/integration

An Ethernet interface is available for integrating the device into system environments/networks. The RF680R can be configured via the Ethernet interface and with direct connection to the PC. You can configure and program the reader using the following tools:

- STEP 7 Basic/Professional (TIA Portal)
- or via EtherNet/IP
- Web Based Management (WBM)
- OPC UA or XML based user applications

Note that configuration in parallel is not possible using different tools. Simple process controls (e.g. a traffic signal) can be implemented directly using the reader via four digital inputs/outputs.

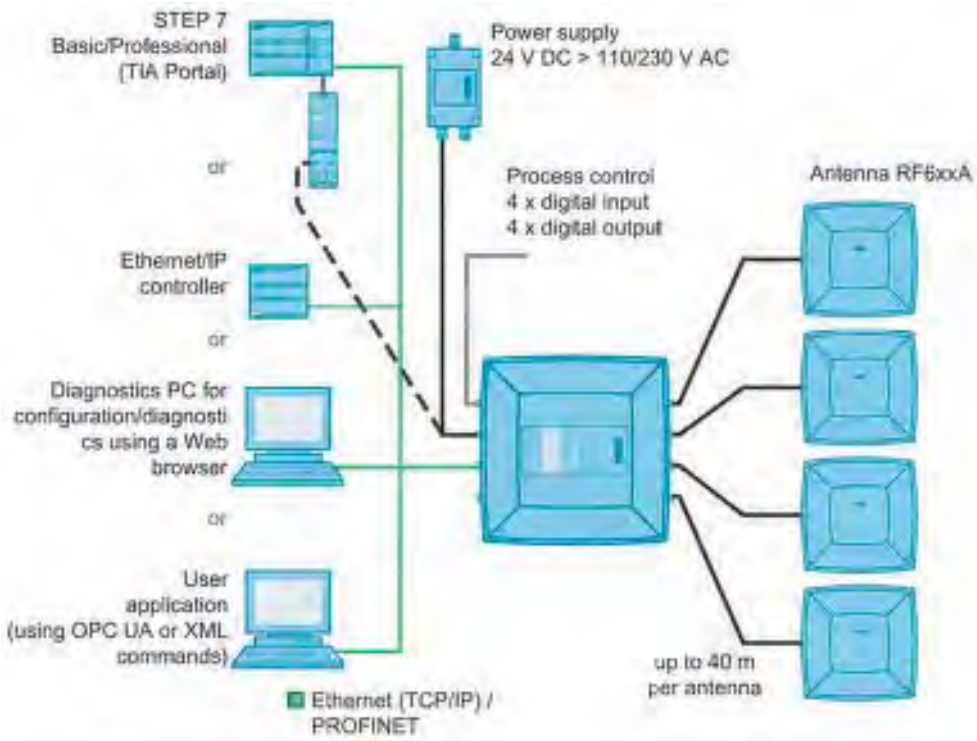

Figure 5-31 Overview: Configuration of RF680R readers

5.5.5 Technical specifications

Table 5- 41 Technical specifications of the RF680R reader

	6GT2811-6AA10-xAA0
Product type designation	SIMATIC RF680R
Radio frequencies	
Operating frequency	
• ETSI	• 865 to 868 MHz
• FCC	• 902 to 928 MHz
• CMIIT	• 920 to 925 MHz
• ARIB (STD-T106)	• 916.8 MHz to 920.4 MHz
Transmit power [1)]	
• ETSI	• 3 to 2000 mW
• FCC	• 3 to 2000 mW
• CMIIT	• 3 to 2000 mW
• ARIB (STD-T106)	• 3 to 1000 mW
Maximum radiated power per antenna	
• ETSI	• 2000 mW ERP
• FCC	• 4000 mW EIRP
• CMIIT	• 2000 mW ERP
• ARIB (STD-T106)	• 4000 mW EIRP
Electrical data	
Range	
• ETSI	• ≤ 8 m
• FCC	• ≤ 8 m
• CMIIT	• ≤ 8 m
• ARIB (STD-T106)	• ≤ 8 m
Protocol	ISO 18000-62/-63
Transmission speed	≤ 300 kbps
Frequency accuracy	≤ ±10 ppm

	6GT2811-6AA10-xAA0
Channel spacing	
• ETSI	• 600 kHz
• FCC	• 500 kHz
• CMIIT	• 250 kHz
• ARIB (STD-T106)	• 1200 kHz
Modulation methods	ASK: DSB modulation & PR-ASK modulation encoding, Manchester or Pulse Interval (PIE)
Multitag capability	Yes
Typical transmission time per byte	
• Write access	• 2 ms
• Read access	• 0.15 ms
Supply voltage	24 V DC (20 ... 30 V DC) [2)]
Maximum permitted current consumption	2 A
Maximum permitted current consumption via DI/DQ interface	1 A [3)]
Current consumption (on standby), typical	
• 20 V input voltage on the reader	• 220 mA / 4.4 W
• 24 V input voltage on the reader	• 190 mA / 4.5 W
• 30 V input voltage on the reader	• 150 mA / 4.5 W
Current consumption (at 1000 mW transmit power), typical	
• 20 V input voltage on the reader	• 450 mA / 9.0 W
• 24 V input voltage on the reader	• 380 mA / 9.1 W
• 30 V input voltage on the reader	• 300 mA / 9.6 W
Current consumption (at 2000 mW transmit power), typical	
• 20 V input voltage on the reader	• 610 mA / 12.2 W
• 24 V input voltage on the reader	• 500 mA / 12.0 W
• 30 V input voltage on the reader	• 410 mA / 12.3 W

Interfaces	
Antenna connectors	4x RP-TNC
Power supply	1x M12 (8-pin)
DI/DQ interface	1x M12 (12-pin)
Digital inputs	4
Digital outputs	4
Ethernet interface	2x M12 (4-pin), 100 Mbps

	6GT2811-6AA10-xAA0
Mechanical specifications	
Material	
• Upper part of housing	• Pocan (silicone-free)
• Lower part of housing	• Aluminum
Color	
• Upper part of housing	• TI-Grey
• Lower part of housing	• Silver
Permitted ambient conditions	
Ambient temperature	
• During operation	• -25 ... +55 °C
• During transportation and storage	• -40 ... +85 °C
Degree of protection	IP65
Shock resistant to EN 60068-2-27	25.5 g [4)]
Vibrations according to EN 60068-2-6	3.1 g [4)]
Design, dimensions and weight	
Dimensions (W × H × D)	258 × 258 × 80 mm
Weight	2.4 kg
Type of mounting	
• Mounting rail	• Hanging
• VESA 100	• 4x M4 screws (≈ 1.5 Nm)
Operation indicator	8 LEDs
Status display	9 LEDs

	6GT2811-6AA10-xAA0
Standards, specifications, approvals	
Proof of suitability	EN 301 489-1 V1.9.2 / EN 301 489-3 V1.6.1 / EN 302 208-1/-3 V1.4.1 FCC CFR 47, Part 15 section 15.247
MTBF	28 years

1) Measured at the output of the antenna socket.

2) All supply and signal voltages must be safety extra low voltage (SELV/PELV according to EN 60950). The voltage sources must meet the requirements of limited power sources (LPS) and NEC Class 2.

Note that, depending on the power consumption, using extension cables > 20 m (6GT2891-4FN50) may lead to a voltage drop on the reader. This voltage drop can mean that the necessary minimum voltage on the reader is below the required 20 V.

3) Keep to the switching schemes of the DI/DQ interface.

4) The values for shock and vibration are maximum values and must not be applied continuously. These values only apply to mounting using screws.

5.5.6 Dimension drawing

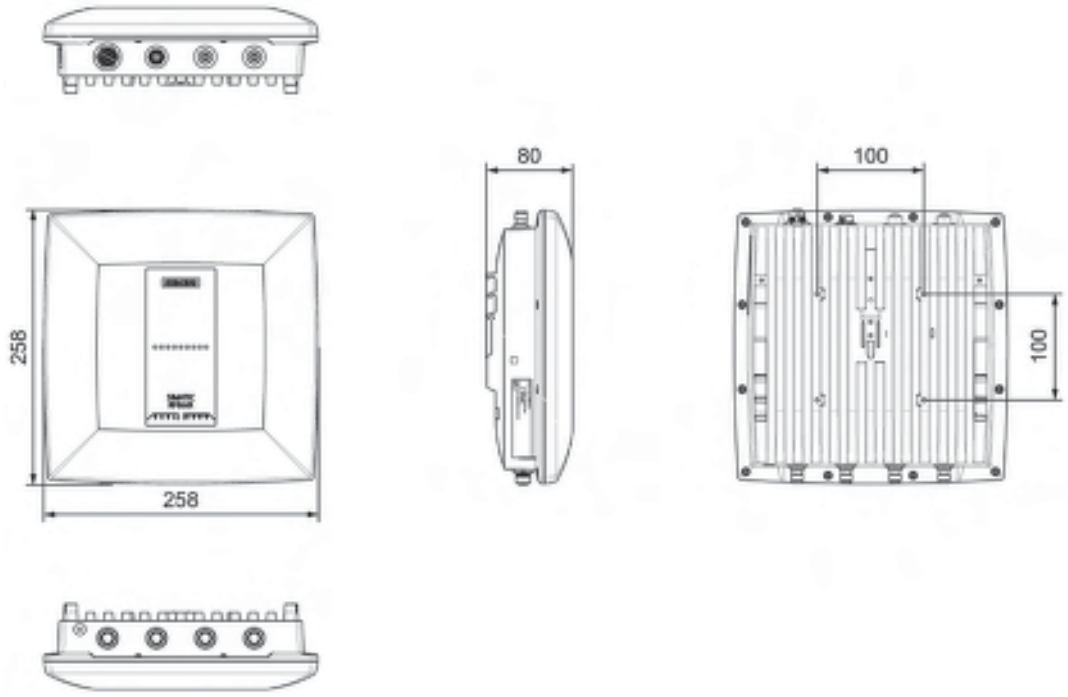

Figure 5-32 Dimension drawing RF680R

All dimensions in mm (± 0.5 mm tolerance)

5.5.7 Certificates and approvals

Note

Marking on the readers according to specific approval

The certificates and approvals listed here apply only if the corresponding mark is found on the readers.

Table 5- 42 6GT2811-6AA10-0AA0

Labeling	Description
CE	Conformity with the RED directive 2014/53/EU Conformity with the RoHS directive 2011/65/EU
ICASA	South Africa radio approval: Radio Equipment Type Approval
India	India wireless approval Marking on the reader: No. NR-ETA/1588
EAC	Radio approval for Russia, Belarus, Kazakhstan

Table 5- 43 6GT2811-6AA10-1AA0

Labeling	Description
FC Federal Communications Commission	FCC CFR 47, Part 15 section 15.247 Radio Frequency Interference Statement This equipment has been tested and found to comply with the limits for a Class B digital device, pursuant to Part 15 of the FCC Rules. FCC ID: NXW-RF600R2
Industry Canada Radio Standards Specifications	RSS-210 Issue 7, June 2007, Section 2.2, A8 IC: 267X-RF600R2, Model: RF680R
UL C US	This product is UL-certified for the USA and Canada. It meets the following safety standard(s): UL 60950-1 - Information Technology Equipment Safety - Part 1: General Requirements CSA C22.2 No. 60950 -1 - Safety of Information Technology Equipment UL Report E 115352

Labeling	Description
	Brazil radio approval Marking on the reader (6GT2811-6AA10-1AA0): Statement about approval: Este equipamento opera em caráter secundário, isto é, não tem direito à proteção contra interferência prejudicial, mesmo de estações do mesmo tipo e não pode causar interferência a sistemas operando em caráter primário. Reader certificate: ANATEL 2892-15-4794
	KCC Certification Type of equipment: A급 기기 (업무용 방송통신기자재) Class A Equipment (Industrial Broadcasting & Communication Equipment) 이 기기는 업무용(A급) 전자파적합기기로서 판 매자 또는 사용자는 이 점을 주의하시기 바라 며, 가정외의 지역에서 사용하는 것을 목적으로 합니다. This equipment is Industrial (Class A) electromagnetic wave suitability equipment and seller or user should take notice of it, and this equipment is to be used in the places except for home. Certificate of the reader: MSIP-CMM-RF5-RF680R
C-141618	Argentina radio approval: Registro de la COMISION NACIONAL DE COMUNICACIONES
RCPSISI14-1926-A1	Mexico radio approval: CERTIFICADO DE HOMOLOGACION, IFETEL
	Australia radio approval: This product meets the requirements of the AS/NZS 3548 Norm.

Table 5- 44 6GT2811-6AA10-2AA0

Standard	
CMIIT Certification	China radio approval Marking on the reader: CMIIT ID: 2014DJ3988

5.5.7.1 FCC information

Siemens SIMATIC RF680R (FCC): 6GT2811-6AA10-1AA0

FCC ID: NXW-RF600R2

This device complies with part 15 of the FCC rules. Operation is subject to the following two conditions:

(1) This device may not cause harmful interference, and

(2) this device must accept any interference received, including interference that may cause undesired operation.

Caution

Any changes or modifications not expressly approved by the party responsible for compliance could void the user's authority to operate the equipment.

Note

This equipment has been tested and found to comply with the limits for a Class B digital device, pursuant to part 15 of the FCC Rules.

These limits are designed to provide reasonable protection against harmful interference when the equipment is operated in a commercial environment. This equipment generates, uses, and can radiate radio frequency energy and, if not installed and used in accordance with the instruction manual, may cause harmful interference to radio communications. Operation of this equipment in a residential area is likely to cause harmful interference in which case the user will be required to correct the interference at his own expense.

FCC Notice

To comply with FCC part 15 rules in the United States, the system must be professionally installed to ensure compliance with the Part 15 certification.

It is the responsibility of the operator and professional installer to ensure that only certified systems are deployed in the United States. The use of the system in any other combination (such as co-located antennas transmitting the same information) is expressly forbidden.

FCC Exposure Information

To comply with FCC RF exposure compliance requirements, the antennas used for this transmitter must be installed to provide a separation distance of at least 20 cm from all persons and must not be co-located or operating in conjunction with any other antenna or transmitter.

5.5.7.2 IC-FCB information

Siemens SIMATIC RF680R (FCC): 6GT2811-6AA10-1AA0

IC: 267X-RF600R2

This device complies with Industry Canada licence-exempt RSS standard(s). Operation is subject to the following two conditions:

(1) This device may not cause interference, and

(2) this device must accept any interference, including interference that may cause undesired operation of the device.

Le présent appareil est conforme aux CNR d`Industrie Canada applicables aux appareils radio exempts de licence. L`exploitation est autorisée aux deux conditions suivantes :

(1) L`appareil ne doit pas produire de brouillage, et

(2) l'utilisateur de l`appareil doit accepter tout brouillage radioélectrique subi, même si le brouillage est susceptible d`en compromettre le fonctionnement.

Industry Canada Notice

To reduce potential radio interference to other users, the antenna type and its gain should be so chosen that the equivalent isotropically radiated power (e.i.r.p.) is not more than that permitted for successful communication.

Transmitter power and antenna information for antennas with a gain less than 6 dBi:

This device has been designed to operate with the SIMATIC RF620A antenna 902-928, the SIMATIC RF640A antenna 902-928 as well as the SIMATIC RF660A antenna 902-928 listed below, and having a maximum gain of 5,5 dBi.

Arbitrary transmission power settings in combination with other antennas or antennas having a gain greater than 5,5 dBi are strictly prohibited for use with this device.

The required antenna impedance is 50 Ohms.

Transmitter power and antenna information for antennas with a gain greater 6 dBi:

This device requires professional installation. Antennas with a gain greater 6 dBi may be used provided the system does not exceed the radiation power of 4000 mW E.I.R.P. This device has been designed to operate with the SIMATIC RF642A antenna 902-928 exceeding the maximum gain of 5,5 dBi under the restriction that the RF power at the input of the antenna must be set to meet the following relation: RF power (dBm) ≤ 30 dBm – (antenna gain (dBi) – 6 dBi) Other antennas or system configurations for antennas having a gain greater than 6 dBi are strictly prohibited for use with this device. The required antenna impedance is 50 Ohms.

5.6 SIMATIC RF685R

5.6.1 Description

5.6.1.1 Overview

The SIMATIC RF685R is a stationary reader in the UHF frequency band with an integrated antenna. An additional external UHF RFID antenna can be connected via an RP-TNC connector.

The maximum transmit power is 2000 mW at the external reader output, die radiant power of the internal antenna is also 2000 mW ERP/EIRP. A radiated power of up to 2000 mW ERP / 4000 mW EIRP is achieved when the appropriate antennas and antenna cables are used. The interfaces (Ethernet, power supply, DI/DQ interface) are located on the lower front edge. These interfaces can be used to connect the reader to the power supply and to a PC or a controller for parameter assignment.

The degree of protection is IP65.

	Pos.	Description
	①	RP-TNC interface for connection of an external antenna
	②	LED status display
	③	LED operating display
	④	DI/DQ interface: X10 DI/DQ (M12, 12-pin)
	⑤	Interface to power supply (RS422), 24 V DC [1]: X80 DC24V (M12, 8-pin)
	⑥	Ethernet interface, TCP/IP: X1 P1 (M12, 4-pin)
	⑦	Ethernet interface, TCP/IP: X1 P2 (M12, 4-pin)

[1]) Connection of the readers to the ASM 456 communications module via the RS-422 interface.

5.6.1.2 Ordering data

Table 5- 45 Ordering data RF685R

Product	Article number
RF685R (ETSI)	6GT2811-6CA10-0AA0
RF685R (FCC)	6GT2811-6CA10-1AA0
RF685R (CMIIT)	6GT2811-6CA10-2AA0
RF685R (ARIB)	6GT2811-6CA10-4AA0

Table 5- 46 Ordering data accessories

Product			Article number
Holder set for securing the reader • DIN rail T35 (S7-1200) • S7-300 standard rail • S7-1500 standard rail			6GT2890-0AB00
SIMATIC antenna holder for RF600 devices			6GT2890-2AB10
Connecting cable and connectors			
	• DI/DQ cable connector open cable ends	5 m	6GT2891-0CH50
	• Ethernet plug on the reader FastConnect M12 (IP65)		6GK1901-0DB20-6AA0
	• Ethernet plug Standard IE FastConnect RJ45 180 (IP20)		6GK1901-1BB10-2AA0
	• Industrial Ethernet cable M12 / RJ45	5 m	6XV1871-5TH50
	• Industrial Ethernet cable M12 / M12	5 m	6XV1870-8AH50
	• Industrial Ethernet connecting cable M12-180 / RJ45	2 m	6XV1871-5TH20
		3 m	6XV1871-5TH30
		5 m	6XV1871-5TH50
	• Industrial Ethernet cable by the meter, green (minimum 20 m)		6XV1840-2AH10
	• Connecting cable reader ↔ CM M12-180 / M12-180	2 m	6GT2891-4FH20
		5 m	6GT2891-4FH50
		10 m	6GT2891-4FN10
		20 m	6GT2891-4FN20
		50 m	6GT2891-4FN50

Product		Article number
Connecting cable CM ↔ reader / extension cable for 24 V connecting cable RS422, M12 connector, 8-pin socket		
	• 2 m	6GT2891-4FH20
	• 5 m	6GT2891-4FH50
	• 10 m	6GT2891-4FN10
	• 20 m	6GT2891-4FN20
	• 50 m	6GT2891-4FN50
Wide-range power supply unit for SIMATIC RF systems		
	• With EU plug	6GT2898-0AC00
	• With UK plug	6GT2898-0AC10
	• With US plug	6GT2898-0AC20
24 V connecting cable reader ↔ wide-range power supply unit		
	• with plug, 5 m	6GT2891-0PH50
	• with open ends, 2 m	6GT2891-4EH20
	• with open ends, 5 m	6GT2891-4EH50
Set of protective caps Contains 3 protective caps for antenna output, one protective cap for digital I/O interface and 2 protective caps for Ethernet/PROFINET (required for IP65 degree of protection when some connectors are unused)		6GT2898-4AA10
DVD "Ident Systems Software & Documentation"		6GT2080-2AA20

5.6.1.3 Pin assignment of the DI/DQ interface (X10 DI/DQ)

Table 5- 47 Pin assignment of the DI/DQ interface (reader end)

View of interface (M12 socket, 12-pin)	Pin	Pin assignment
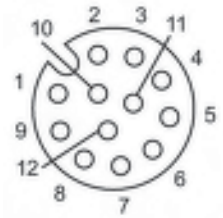	1	GND (output to supply of the digital inputs/outputs [not galvanically isolated])
	2	VCC (output to the supply of the digital inputs/outputs [not galvanically isolated])
	3	DO Common / Output Common
	4	DO 0 / Output 00
	5	DO 1 / Output 01
	6	DO 2 / Output 02
	7	DO 3 / Output 03
	8	DI 0 / Input 00
	9	DI Common / Input Common
	10	DI 1 / Input 01
	11	DI 2 / Input 02
	12	DI 3 / Input 03

Note

Requirement for external power sources

When the DI/DQ interface is supplied with power by an external power source, this source must meet the requirements for LPS (Limited Power Sources) and NEC Class 2.

Color scheme of the DI/DQ standard cable with M12 connector

The following figure shows the color scheme of the DI/DQ standard cable from Siemens (6GT2891-0CH50). You can use the color scheme to assign the wire colors to the pins.

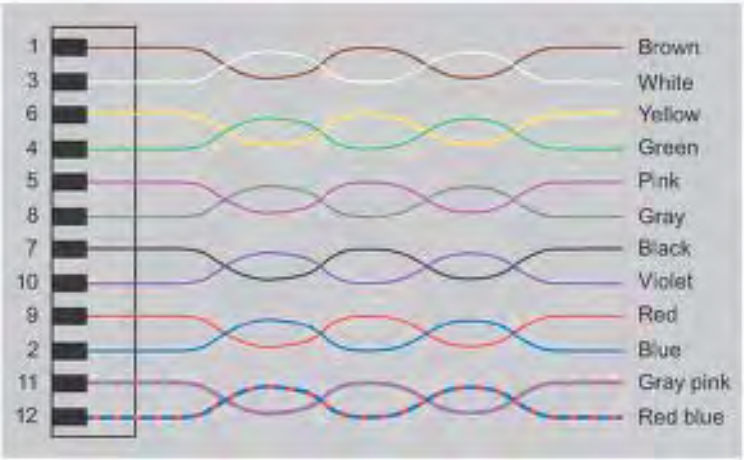

Figure 5-33 Wiring diagram: M12 connector

5.6.1.4 Switching scheme for the DI/DQ interface

Connection possibilities

You can connect the reader in different ways. In general, the outputs and inputs should be connected as follows:

Output (DO 0 ... 3)

- Each output is rated for 0.5 A current and is electronically protected.
- 4 digital outputs can be operated simultaneously each with up to 0.5 A (up to 1 A in total). With a total current > 1 A, you need to use an external power supply.
- The outputs are optically isolated through optocouplers.

input (DI 0 ... 3)

- The inputs are optically isolated through optocouplers.
- Level
  - Low: 0 ... 7 V
  - High: 15 ... 24 V

The following diagrams illustrate various connection possibilities.

Note

Minimum time between changes

Note that changes on the DI/DQ interface that are not applied for at least 1.5 seconds are not detected by the reader.

Voltage infeed from internal source (no electrical isolation)

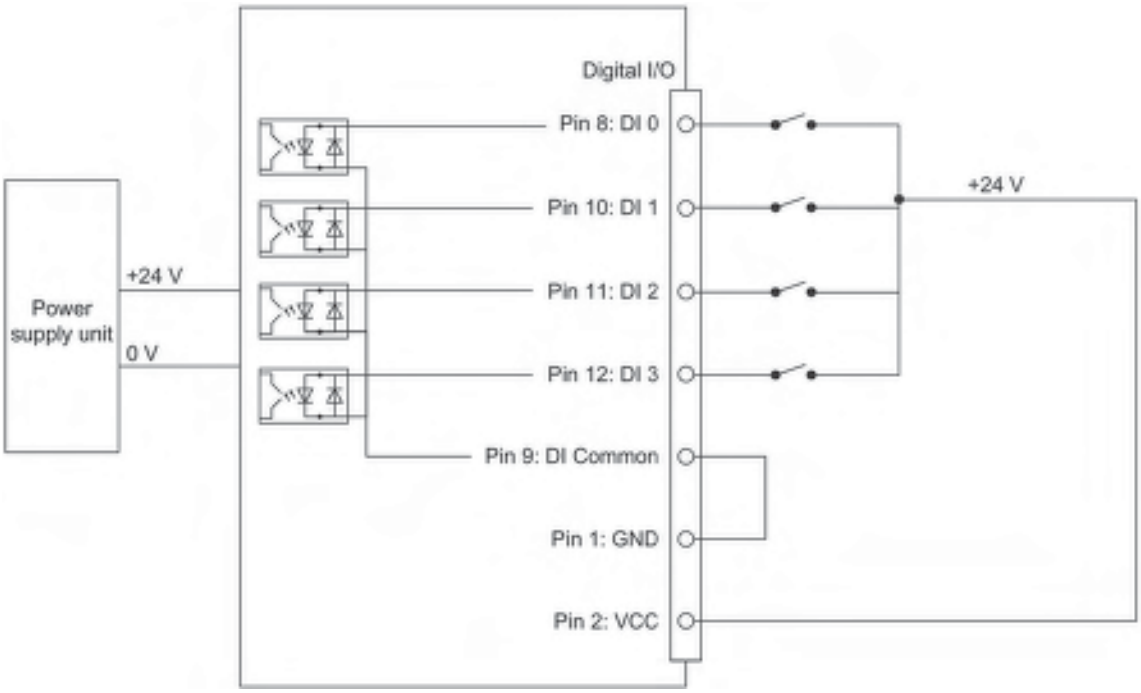

Figure 5-34 Circuit example 1: Digital inputs

Alternative connection possibilities:

- Pin 2 (VCC) to Pin 9 DI Common
- Pin 1 GND to busbar inputs

Voltage infeed from external source

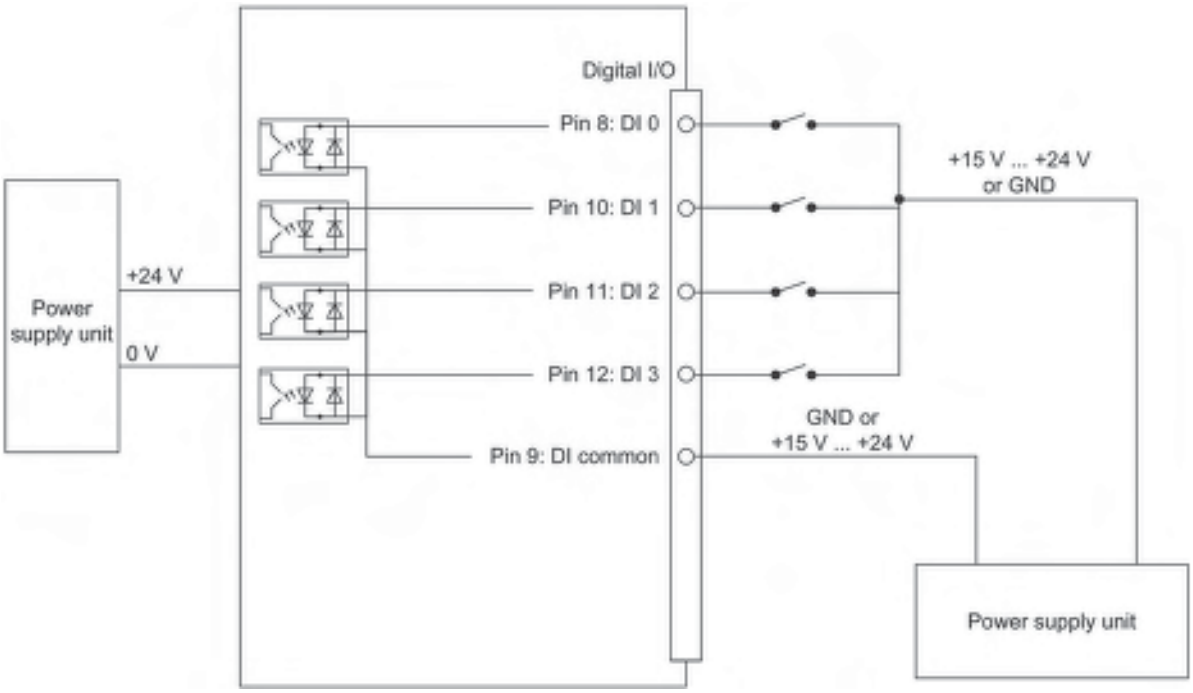

Figure 5-35 Circuit example 2: Digital inputs

Voltage infeed from external source with various voltages

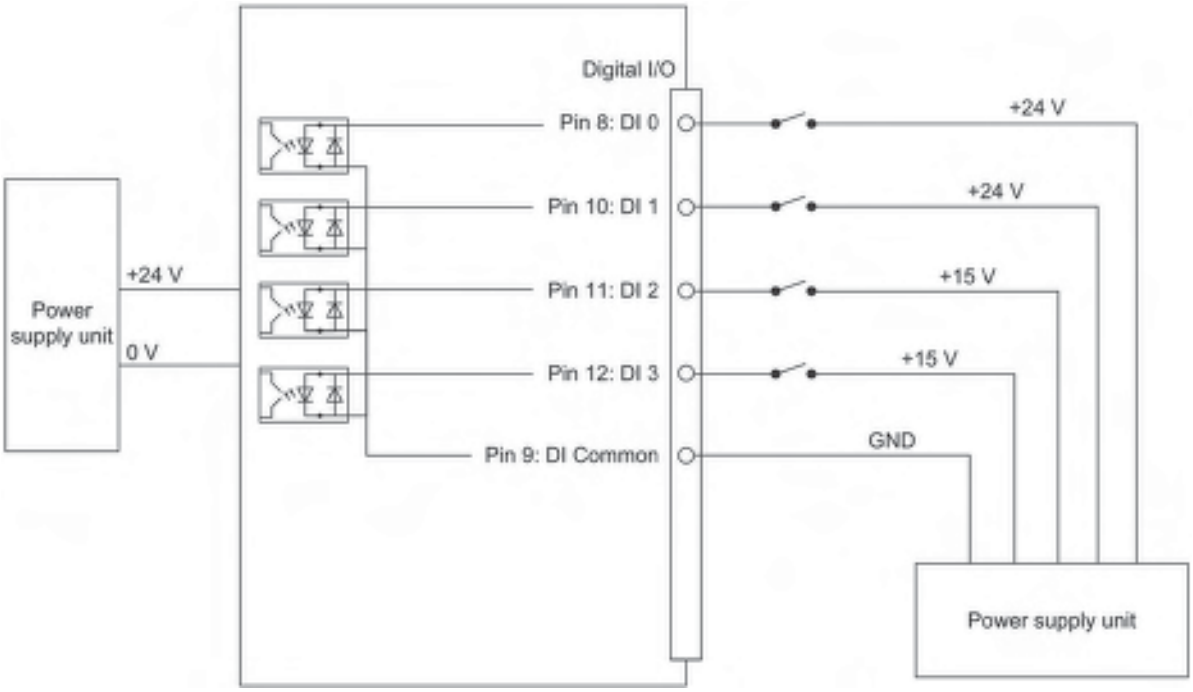

Figure 5-36 Circuit example 3: Digital inputs

Voltage infeed from internal source

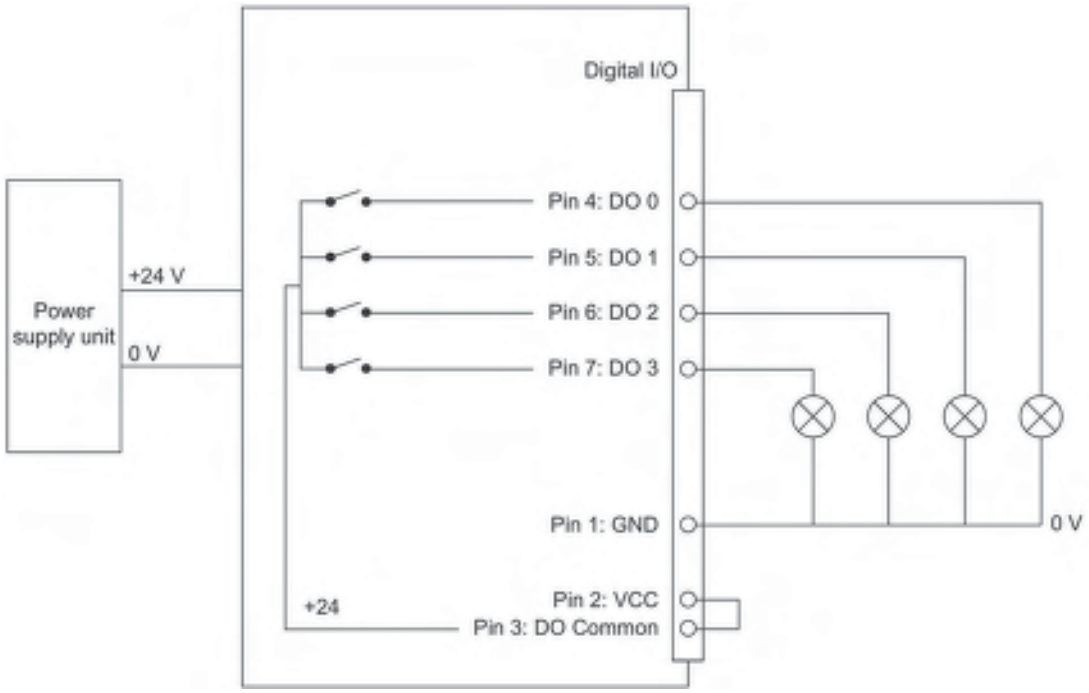

Figure 5-37 Circuit example 4: Digital outputs

Alternative connection possibilities:

- Pin 1 GND to Pin 3 DO Common
- Pin 2 (VCC) to busbar outputs

Voltage infeed from external source

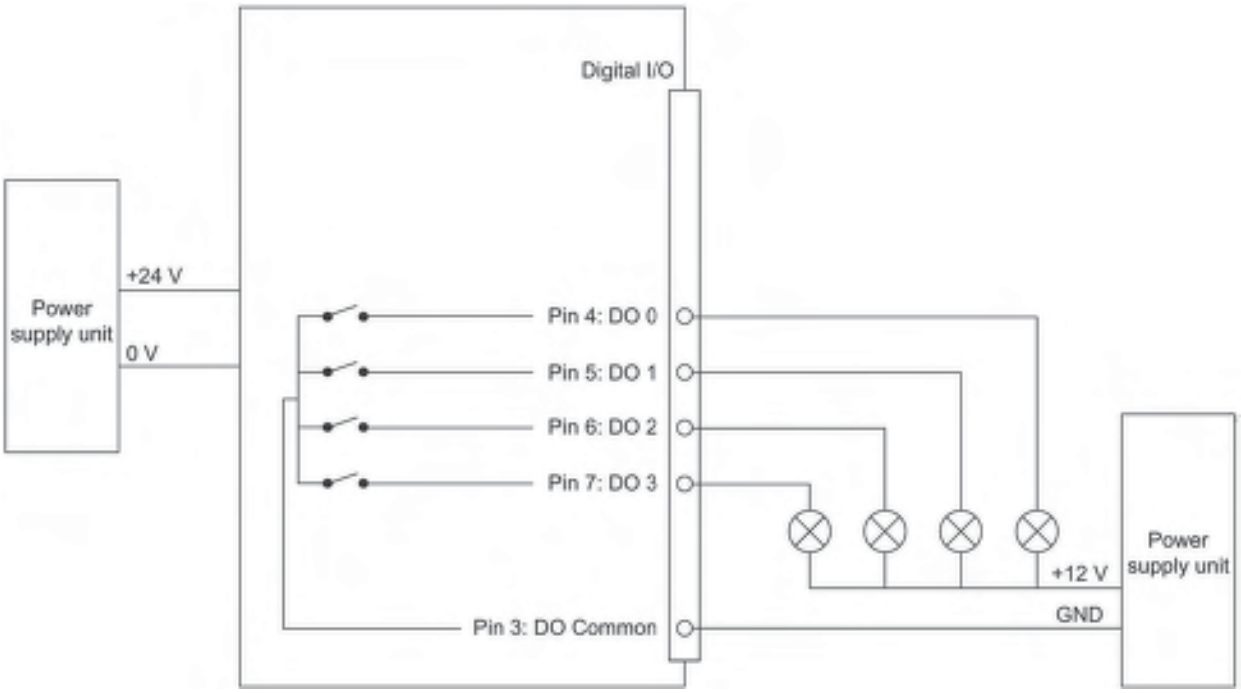

Figure 5-38 Circuit example 5: Digital outputs

Voltage infeed from an external source is shown here for 12 V as an example. Other voltages are also permissible.

Voltage infeed from external source with various voltages

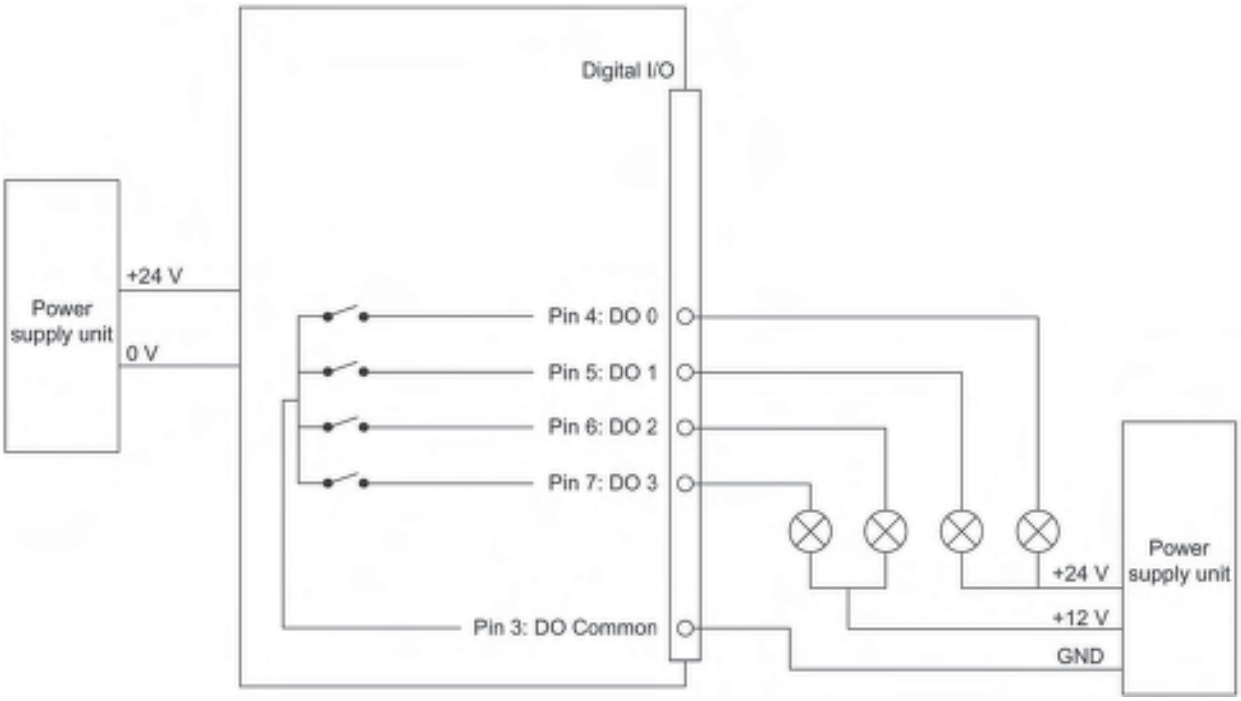

Figure 5-39 Circuit example 6: Digital outputs

5.6.1.5 Pin assignment of the power supply interface (X80 24VDC)

Table 5- 48 Pin assignment of the RS422 interface (reader end)

View of interface (M12 socket, 8-pin)	Pin	Wire colors	Assignment
	1	White	+ 24 V
	2 [1]	Brown	- Tx
	3	Green	0 V
	4 [1]	Yellow	+ Tx
	5 [1]	Gray	+ Rx
	6 [1]	Pink	- Rx
	7	--	Unassigned
	8	--	Earth (shield)

[1] These pins are not required if the reader is operated via Ethernet.

Note

Requirement for external power sources

The reader must only be supplied with power by power supply units that meet the requirements of LPS (Limited Power Source) and NEC Class 2.

Requirement for external power sources

The reader must only be supplied with power by power supply units that meet the requirementsof limited power source (LPS) and NEC Class 2.

Spécification des sources de tension externes

L'alimentation du plot de lecture/écriture doit être exclusivement assurée par des blocs d'alimentation conformes aux spécifications des sources à puissance limitée (Limited Power Sources LPS) et de NEC class 2.

Notes on connectors and cables

The cables with open cable ends (6GT2891-4EH20, 6GT2891-4EH50) have an 8-pin M12 plug at one end, while the other end of the cable is "open". There are 8 color-coded single wires there for connecting to external devices.

The product range includes additional cables of the type 6GT2891-4Fxxx (2 to 50 m) with an M12 connector at both ends. These cables can be used as extension cables. Long cables can be shortened if necessary.

NOTICE

Insulate unused single wires

Unused single wires must be insulated individually to prevent unwanted connections of signal lines.

NOTICE

For long cables: Adapt the power supply and transmission speed

Note that even with long cables, the supply voltage of 24 VDC must always be guaranteed. Note also that the transmission speed on the serial interface must, if necessary, be reduced.

SIMATIC standard cables (e.g. 6GT2891-4FN10) have a loop resistance of 160 mOhm / meter. This results in a voltage drop of 0.8 volts on the 24 V cable for every 10 meters of connecting cable and with a power requirement of 500 mA. If the power requirement increases through the use of the digital inputs/outputs, the voltage drop increases accordingly.

5.6.1.6 Pin assignment of the Industrial Ethernet interface (X1 P1; X1 P2)

Table 5- 49 Pin assignment of the Industrial Ethernet interface (reader end)

View of interface (M12 socket, 4-pin)	Pin	Pin assignment
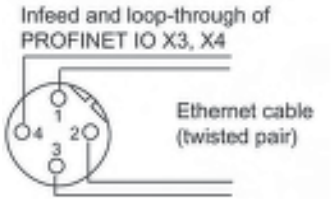	1	Data line +Tx
	2	Data line +Rx
	3	Data line -Tx
	4	Data line -Rx

5.6.1.7 Grounding connection

On the top of the reader there is a blind drill hole (M4 x 8) for grounding. Tighten the screw with a torque of ≈ 1.5 Nm.

WARNING

Hazardous voltage due to lightning strikes

Death or serious injury may occur as a result of lightning strikes to antennas mounted outside buildings.

If the reader is operated with antennas mounted outside buildings, it is imperative that the reader is electrically connected to the ground potential.

NOTICE

Installation only in protected areas

The antenna can be installed in the protected part of a building. When implementing your lightning protection concept, make sure you adhere to the VDE 0182 or IEC 62305 standards.

Ground connection		
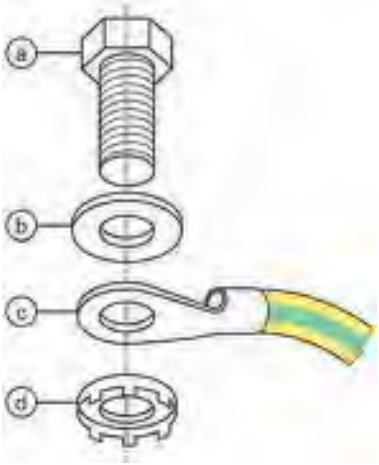	(a)	Screw (M4 x 8)
	(b)	Flat washer
	(c)	Cable lug
	(d)	Contact washer

5.6.2 Planning operation

5.6.2.1 Internal antenna

Minimum mounting clearances of two readers

RF685R has an adjustable internal antenna (linear horizontal or linear vertical). This means that you can set the antenna polarization to be either horizontal, vertical or circular. With the internal antenna active and at 2000 mW ERP radiated power, due to the aperture angle of the antennas, their fields can overlap considerably. This means it is no longer possible to be sure in which of the antenna fields the data of a transponder will be accessed.

To avoid these cases, always observe the recommended minimum distances between two readers as described in the section "Reciprocal influence of read points (Page 47)".

Dense Reader Mode (DRM)

The readers can also interfere with each other (secondary fields), if the channels (Reader TX, Transponder TX) overlap. In order to prevent a transponder channel overlapping with a reader channel, we recommend that the Dense Reader Mode (DRM) is used.

Note

Protective cap

If you only use the internal antenna of the reader, we recommend that you close the external, unused antenna connector on the reader using a protective cap.

Antenna diagram for RF685R (ETSI)

The following radiation diagrams show the directional characteristics of the internal antenna of the RF685R (ETSI) reader. For the spatial presentation of the directional characteristics, the horizontal plane (azimuth section) as well as the vertical plane (elevation section) must be considered. This results in a spatial image of the directional radiation pattern of the antenna.

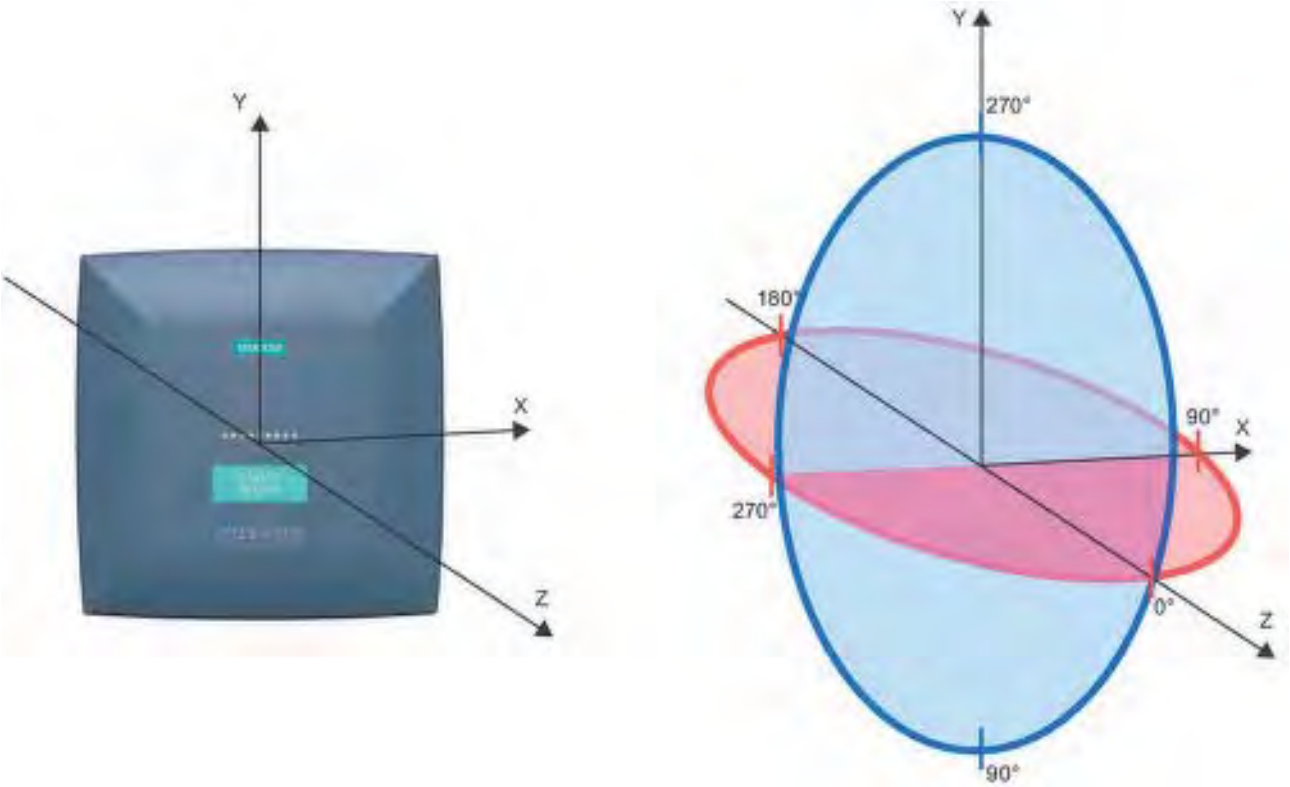

Figure 5-40 Reference system

Radiation diagram (Azimuth section)

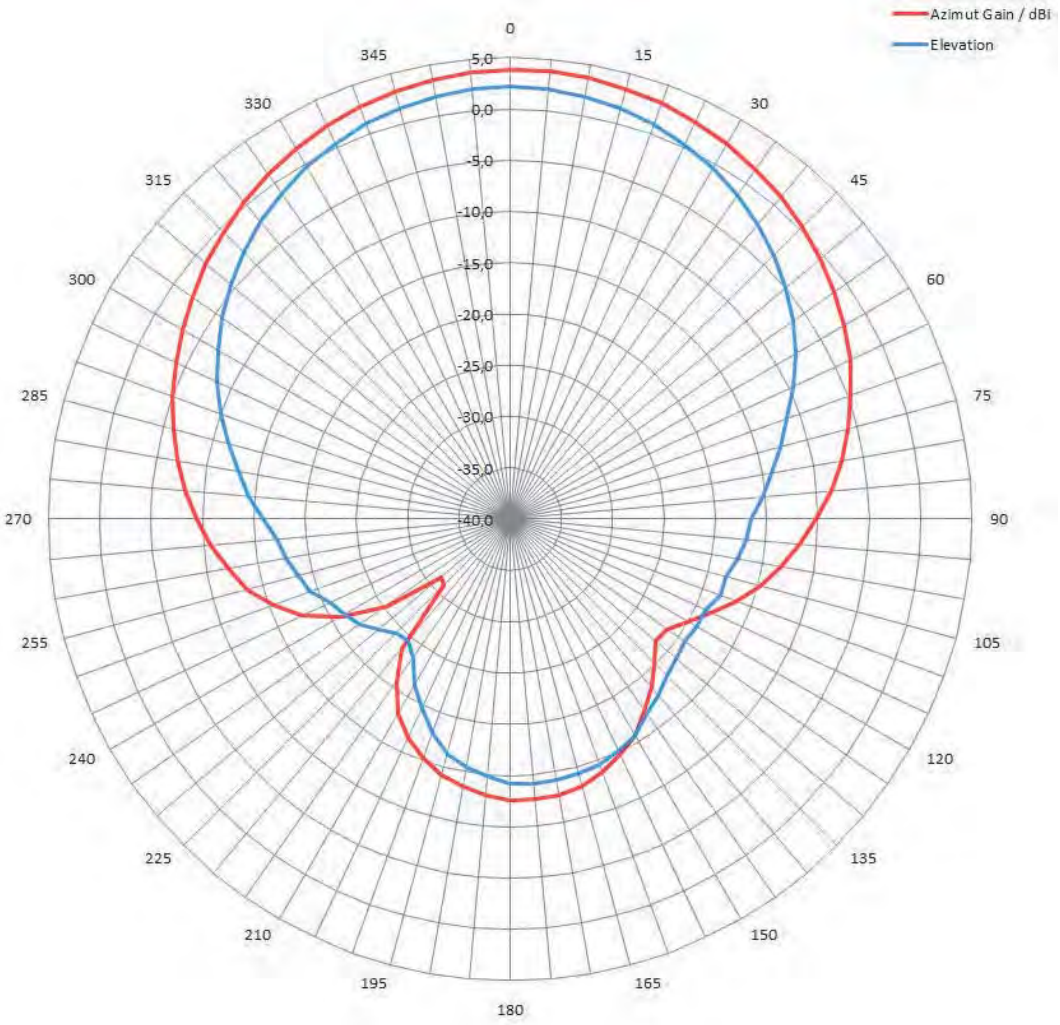

Figure 5-41 Azimuth section

Radiation diagram (elevation section)

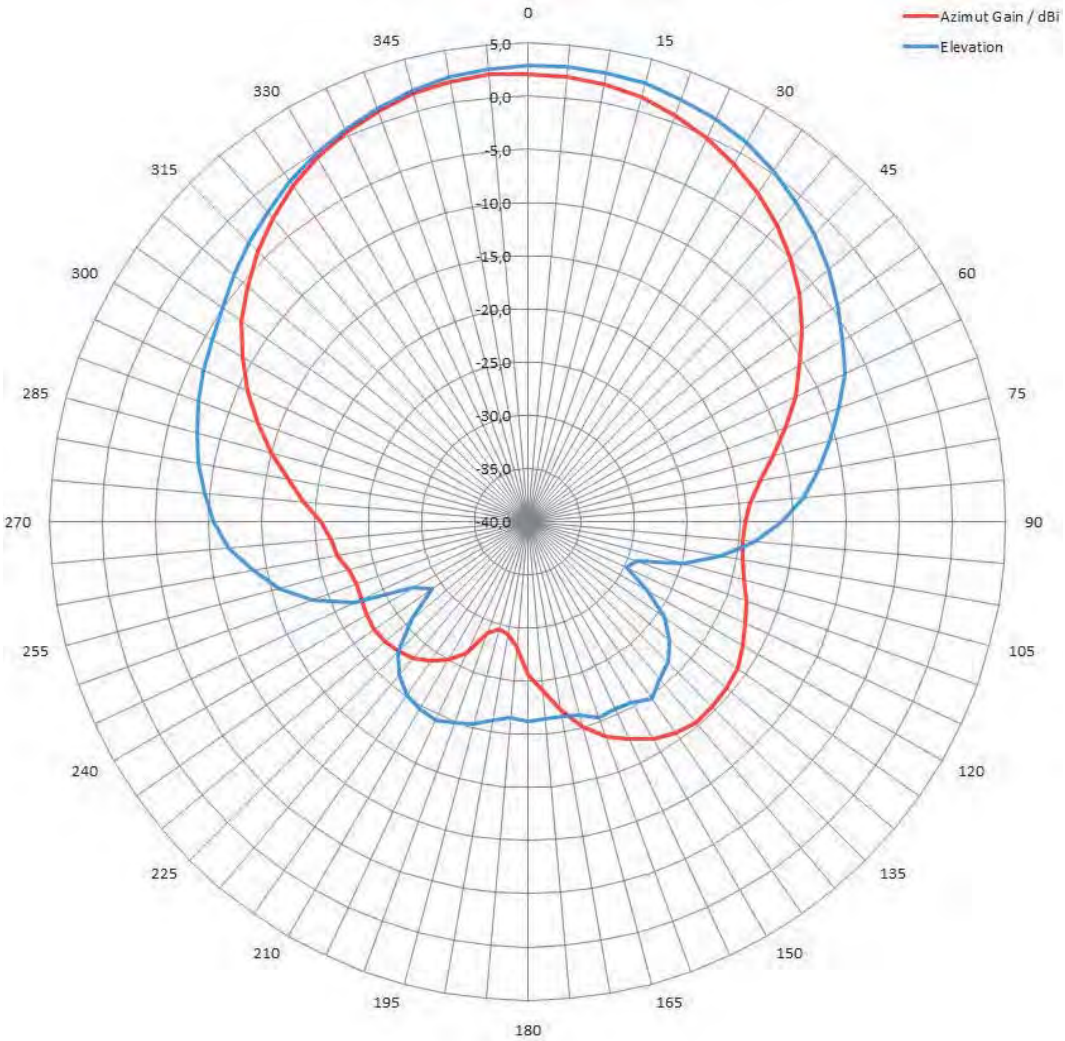

Figure 5-42 Elevation section

Radiation diagram circular

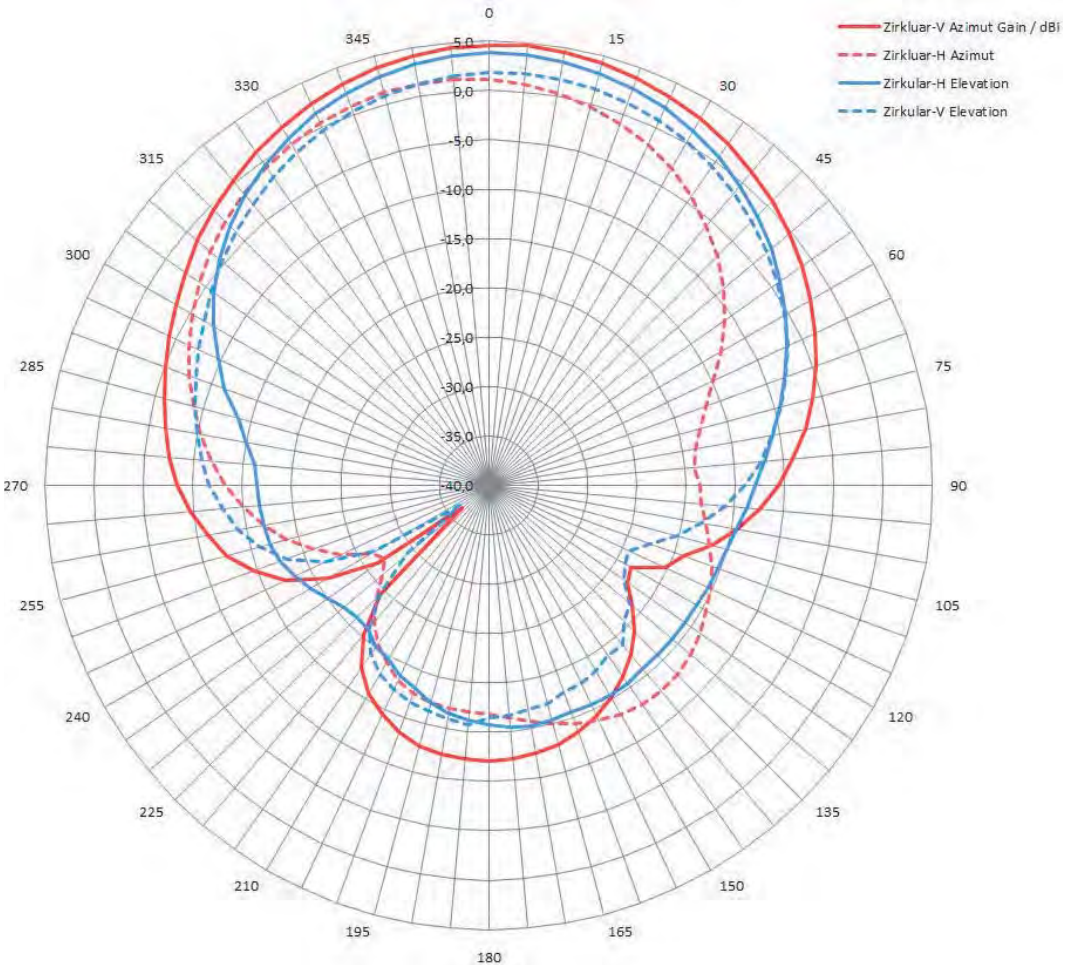

Figure 5-43 Circular section

Overview of the antenna parameters

Table 5- 50 Maximum linear electrical aperture angle at 865 MHz:

	Polarization		Circular polarization
	Linear vertical	Linear horizontal	
Azimuth section	64°	61°	65°
Elevation section	64°	66°	63°
Typical antenna gain in the frequency band 865 to 868 MHz	5 dBi	3 dBi	5 dBi
Antenna axis ratio	--	--	2 dB

You will find more information on the antennas in the section "Guidelines for selecting RFID UHF antennas (Page 51)".

Antenna diagram for RF685R (FCC)

The following radiation diagrams show the directional characteristics of the internal antenna of the RF685R (FCC) reader. For the spatial presentation of the directional characteristics, the horizontal plane (azimuth section) as well as the vertical plane (elevation section) must be considered. This results in a spatial image of the directional radiation pattern of the antenna.

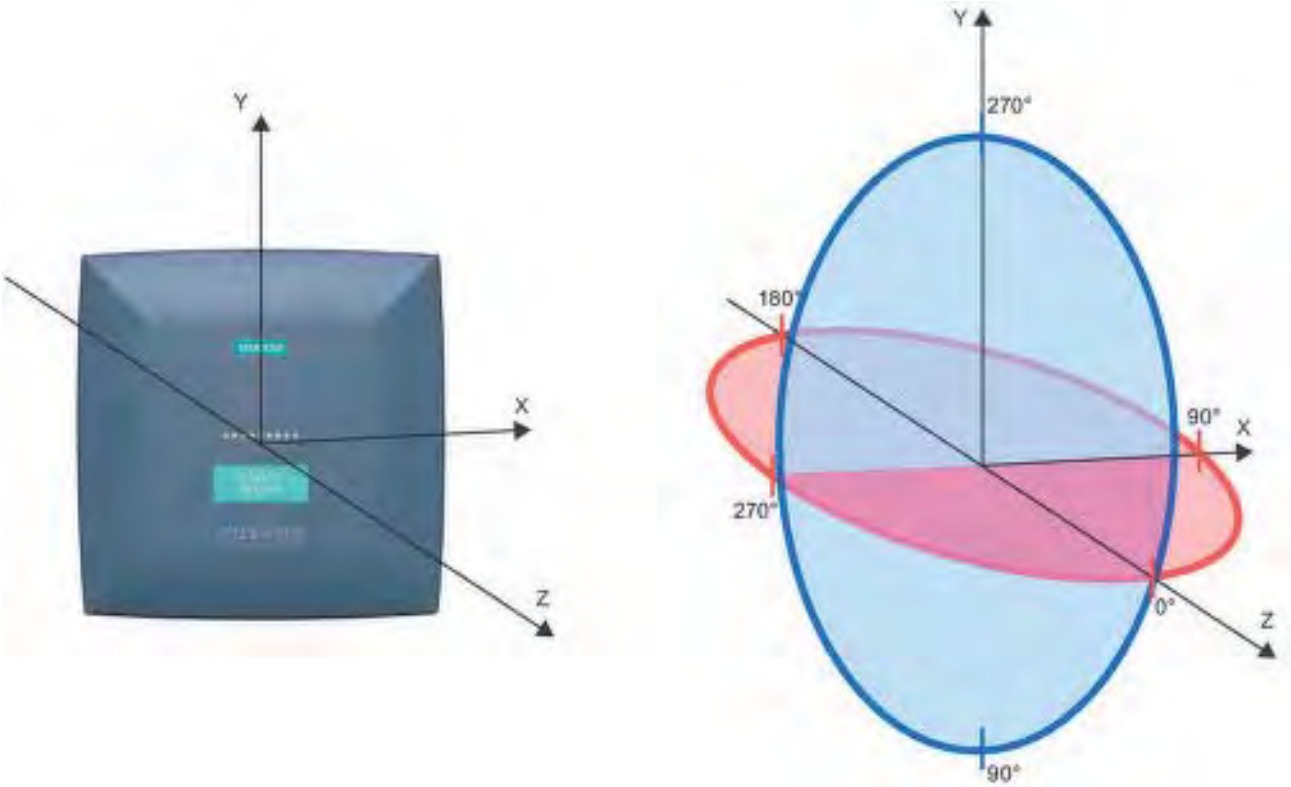

Figure 5-44 Reference system

Radiation diagram (Azimuth section)

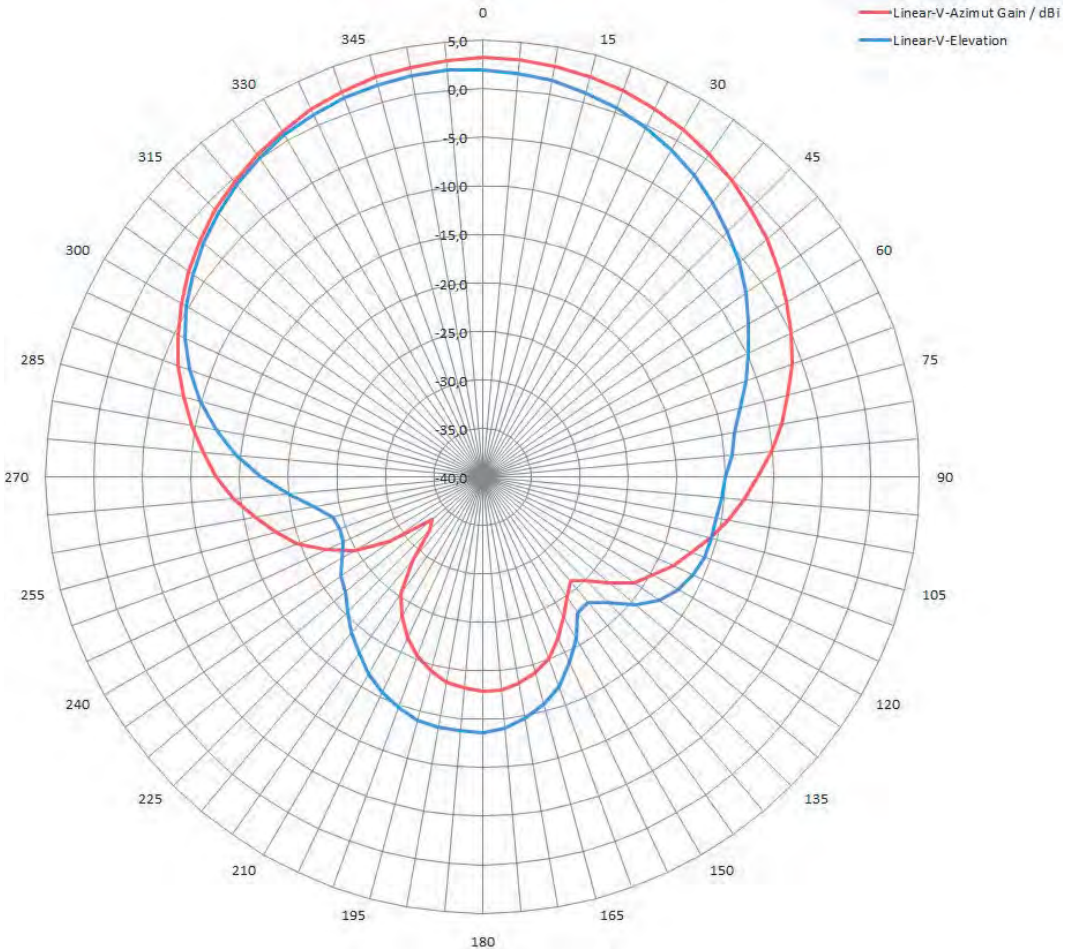

Figure 5-45 Azimuth section

Radiation diagram (elevation section)

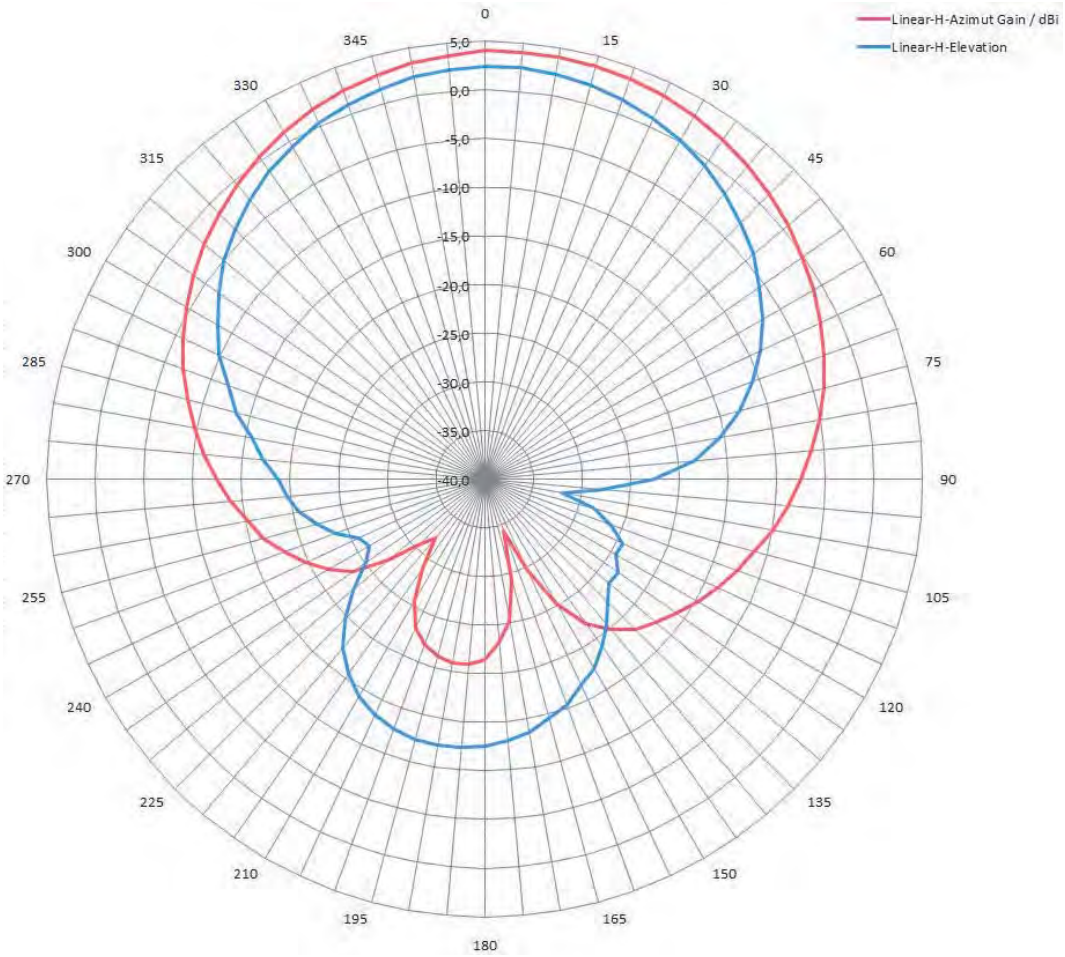

Figure 5-46 Elevation section

Radiation diagram (circular)

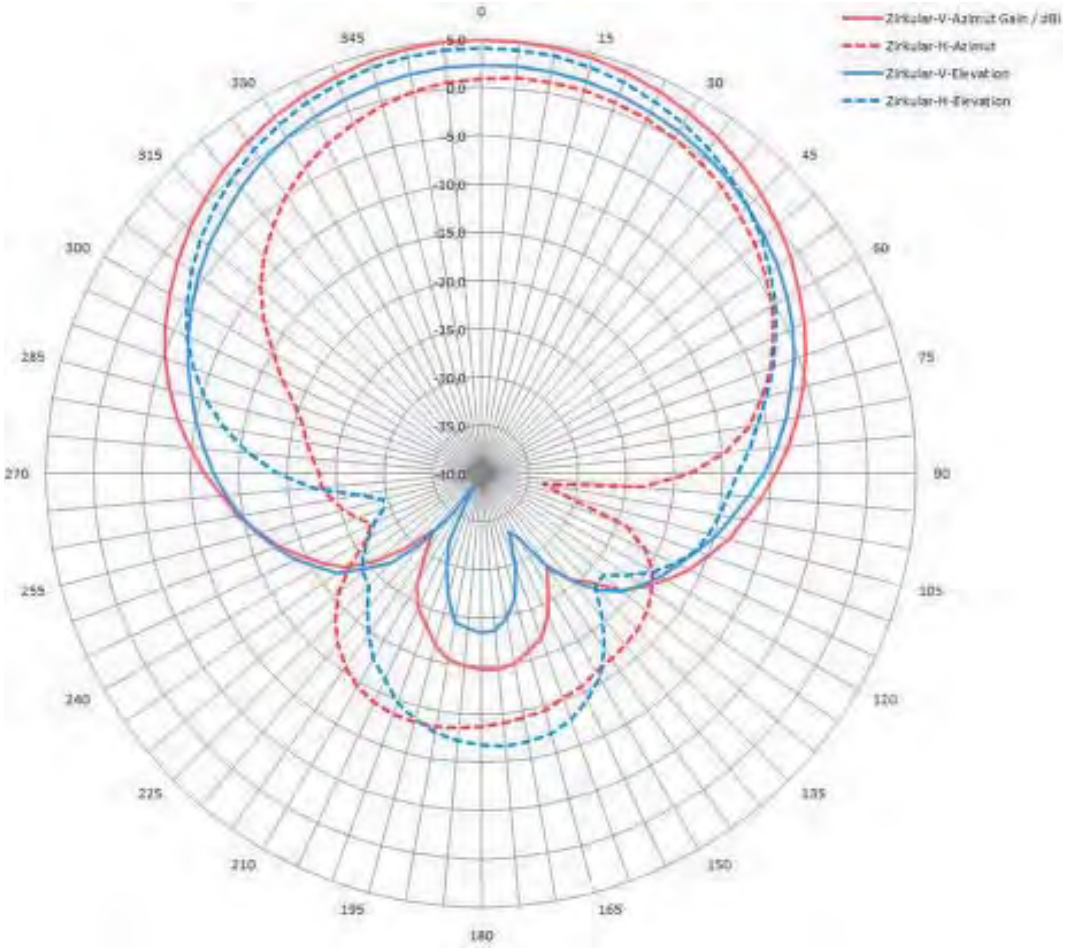

Figure 5-47 Circular section

Overview of the antenna parameters

Table 5- 51 Maximum linear electrical aperture angle at 915 MHz:

	Polarization		Circular polarization
	Linear vertical	Linear horizontal	
Azimuth section	74°	64°	73°
Elevation section	70°	78°	68°
Typical antenna gain in the frequency band 902 to 928 MHz	5 dBi	3 dBi	5 dBi
Antenna axis ratio	--	--	2 dB

You will find more information on the antennas in the section "Guidelines for selecting RFID UHF antennas (Page 51)".

Interpretation of radiation patterns

The following overview table will help you with the interpretation of radiation patterns.

The table shows which dBi values correspond to which read/write ranges (in %): You can read the radiated power depending on the reference angle from the radiation patterns, and thus obtain information on the read/write range with this reference angle with regard to a transponder.

The dBr values correspond to the difference between the maximum dBi value and a second dBi value.

Table 5- 52 Range of antenna depending on antenna gain

Deviation from maximum antenna gain [dBr]	Read/write range [%]
0	100
-3	70
-6	50
-9	35
-12	25
-15	18
-18	13

Example

As can be seen in the section Antenna diagram for RF685R (ETSI) (Page 207), the maximum antenna gain 0 dB is standardized. In the Azimuth diagram, the antenna gain falls by 3°dB at approximately ± 39°. This means that the dBr value is -3. The antenna range is only 70 % of the maximum range at ± 39° from the Z axis within the horizontal plane.

5.6.2.2 External antenna

Preassembled standard cables in lengths of 1 m, 3 m, 5 m, 10 m, 15 m, 20 m and 40 m are available to connect the antenna.

The read range is limited by the cable loss. The maximum range can be achieved with the cable 6GT2815-0BH10 (length 1 m) since this has the lowest cable loss.

Examples of possible antenna reading point configurations

- A data source with an external antenna for a reading point.
- As an alternative, a data source with an internal antenna for a reading point.

5.6.3 Installation/mounting

Requirement

NOTICE
Close unused connectors Note that the readers only have the specified degree of protection when all connectors are in use or when unused connectors are closed with the protective caps. Close any connectors on the reader that you are not using with protective caps. You can order the protective cap set using the article number specified in the section "Ordering data".

CAUTION
Emitted radiation The transmitter complies with the requirements of Health Canada and the FCC limit values for subjecting persons to HF radiation, provided that a minimum spacing of 26 cm exists between antenna and person. When the antennas are installed, you must therefore ensure that a minimum spacing of 26 cm is maintained between personnel and antennas.

Mounting/installing the device

You can mount the reader in the following ways:

- Using a standardized VESA 100 mounting system and the Antenna Mounting Kit (refer to the section AUTOHOTSPOT).

  Tighten the M4 screws on the rear of the reader using a torque of ≤ 1.5 Nm.
- DIN rail T35 (S7-1200)
- S7-300 standard rail
- S7-1500 standard rail
- directly on a flat surface using the VESA 100 mounting system (torque ≈ 1.5 Nm).

  The positions of the mounting holes for the device are shown in the section Dimension drawing (Page 224).

Mounting the reader on a DIN/standard rail

Table 5- 53 DIN rail mounting

	Description	
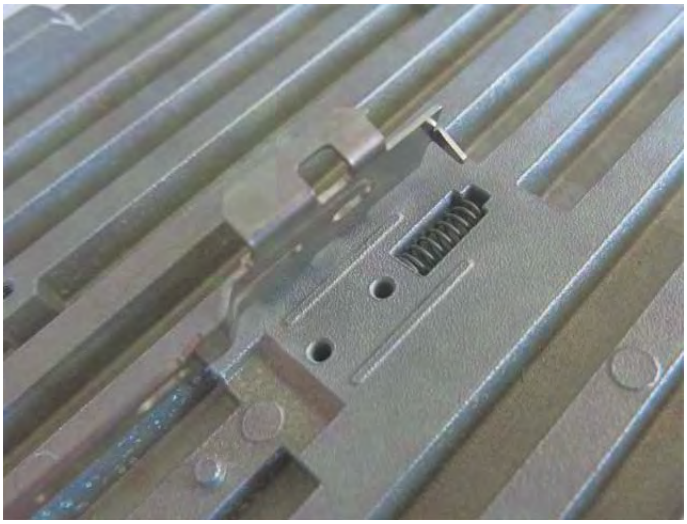	1.	Place the spring in the groove.
	2.	Mount the holder using the supplied Torx screws. When mounting the holder, make sure that the angled tip is positioned above the spring in the groove.

	Description
	3. Fit the lower part of the locking mechanism of the reader into the DIN rail. To be able to mount the reader on or remove it from the DIN rail, pull down the holder mounted in step 2.

Table 5- 54 Installation on a standard rail

	Description	
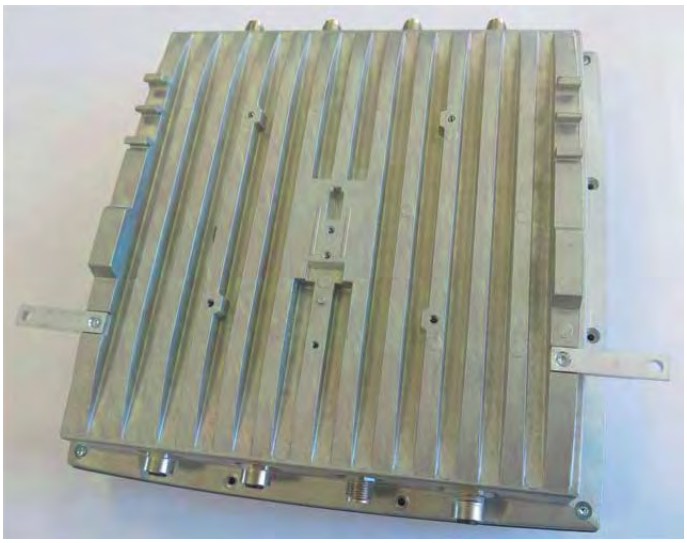	1.	Mount the two adapter pieces using the supplied Torx screws.
	2.	Fit the upper part of the locking mechanism of the reader into the standard rail.
	3.	Secure the reader using the supplied slotted-head screws.

5.6.4 Configuration/integration

An Ethernet interface is available for integrating the device into system environments/networks. The RF685R can be configured via the Ethernet interface and with direct connection to the PC. You can configure and program the reader using the following tools:

- STEP 7 Basic/Professional (TIA Portal)
- or via EtherNet/IP
- Web Based Management (WBM)
- OPC UA or XML based user applications

Note that configuration in parallel is not possible using different tools. Simple process controls (e.g. a traffic signal) can be implemented directly using the reader via four digital inputs/outputs.

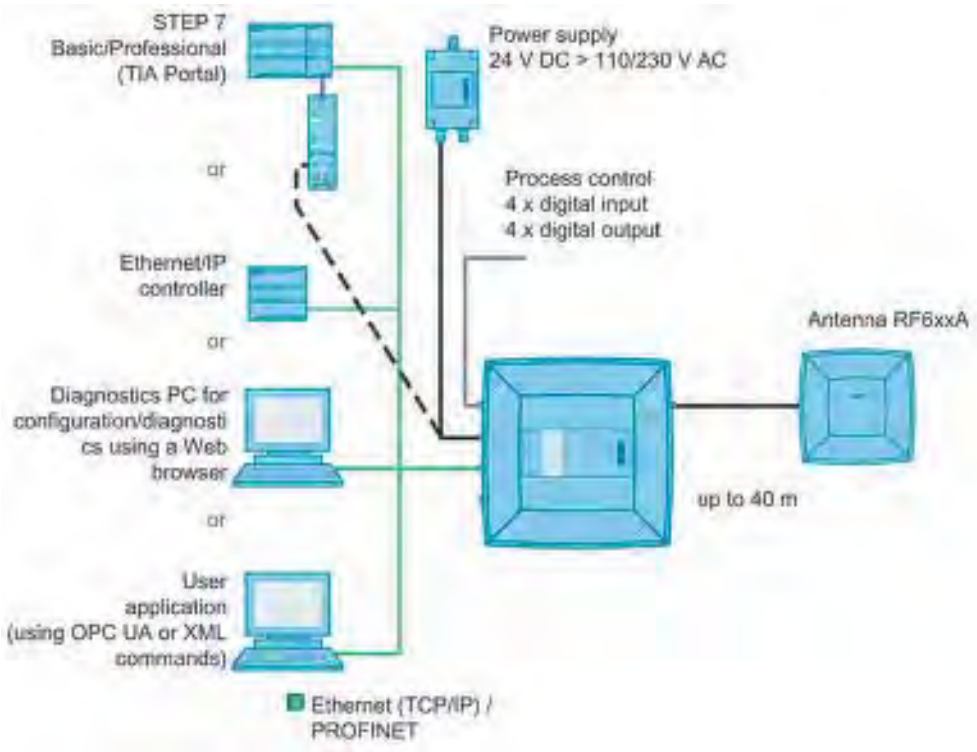

Figure 5-48 Overview: Configuration of RF685R readers

5.6.5 Technical specifications

Table 5- 55 Technical specifications of the RF685R reader

	6GT2811-6CA10-xAA0
Product type designation	SIMATIC RF685R
Radio frequencies	
Operating frequency	
• ETSI	• 865 to 868 MHz
• FCC	• 902 to 928 MHz
• CMIIT	• 920 to 925 MHz
• ARIB (STD-T106)	• 916.8 MHz to 920.4 MHz
Transmit power [1)]	
• ETSI	• 3 to 2000 mW
• FCC	• 3 to 2000 mW
• CMIIT	• 3 to 2000 mW
• ARIB (STD-T106)	• 3 to 1000 mW
Maximum radiated power per antenna	
• ETSI	• 2000 mW ERP
• FCC	• 4000 mW EIRP
• CMIIT	• 2000 mW ERP
• ARIB (STD-T106)	• 4000 mW EIRP
Electrical data	
Range (internal antenna)	
• ETSI	• ≤ 8 m
• FCC	• ≤ 8 m
• CMIIT	• ≤ 8 m
• ARIB (STD-T106)	• ≤ 8 m
Protocol	ISO 18000-62/-63
Transmission speed	≤ 300 kbps
Frequency accuracy	≤ ±10 ppm

	6GT2811-6CA10-xAA0
Channel spacing	
• ETSI	• 600 kHz
• FCC	• 500 kHz
• CMIIT	• 250 kHz
• ARIB (STD-T106)	• 1200 kHz
Modulation methods	ASK: DSB modulation & PR-ASK modulation encoding, Manchester or Pulse Interval (PIE)
Multitag capability	Yes
Typical transmission time per byte	
• Write access	• 2 ms
• Read access	• 0.15 ms
Supply voltage	24 V DC (20 ... 30 V DC) [2)]
Maximum permitted current consumption	2 A
Maximum permitted current consumption via DI/DQ interface	1 A [3)]
Current consumption (on standby), typical	
• 20 V input voltage on the reader	• 220 mA / 4.4 W
• 24 V input voltage on the reader	• 190 mA / 4.5 W
• 30 V input voltage on the reader	• 150 mA / 4.5 W
Current consumption (at 1000 mW transmit power), typical	
• 20 V input voltage on the reader	• 450 mA / 9.0 W
• 24 V input voltage on the reader	• 380 mA / 9.1 W
• 30 V input voltage on the reader	• 300 mA / 9.6 W
Current consumption (at 2000 mW transmit power), typical	
• 20 V input voltage on the reader	• 610 mA / 12.2 W
• 24 V input voltage on the reader	• 500 mA / 12.0 W
• 30 V input voltage on the reader	• 410 mA / 12.3 W

Interfaces	
Antenna connectors	1x RP-TNC
Power supply	1x M12 (8-pin)
DI/DQ interface	1x M12 (12-pin)
Digital inputs	4
Digital outputs	4
Ethernet interface	2x M12 (4-pin), 100 Mbps

	6GT2811-6CA10-xAA0
Mechanical specifications	
Material	
• Upper part of housing	• Pocan (silicone-free)
• Lower part of housing	• Aluminum
Color	
• Upper part of housing	• TI-Grey
• Lower part of housing	• Silver
Permitted ambient conditions	
Ambient temperature	
• During operation	• -25 ... +55 °C
• During transportation and storage	• -40 ... +85 °C
Degree of protection	IP65
Shock resistant to EN 60068-2-27	25.5 g [4)]
Vibrations according to EN 60068-2-6	3.1 g [4)]
Design, dimensions and weight	
Dimensions (W × H × D)	258 × 258 × 80 mm
Weight	2.47 kg
Type of mounting	
• Mounting rail	• Hanging
• VESA 100	• 4x M4 screws (≈ 1.5 Nm)
Operation indicator	8 LEDs
Status display	9 LEDs

	6GT2811-6CA10-xAA0
Standards, specifications, approvals	
Proof of suitability	EN 301 489-1 V1.9.2 / EN 301 489-3 V1.6.1 / EN 302 208-1/-3 V1.4.1 FCC CFR 47, Part 15 section 15.247
MTBF	29 years

1) Measured at the output of the antenna socket.

2) All supply and signal voltages must be safety extra low voltage (SELV/PELV according to EN 60950). The voltage sources must meet the requirements of limited power sources (LPS) and NEC Class 2.

Note that, depending on the power consumption, using extension cables > 20 m (6GT2891-4FN50) may lead to a voltage drop on the reader. This voltage drop can mean that the necessary minimum voltage on the reader is below the required 20 V.

3) Keep to the switching schemes of the DI/DQ interface.

4) The values for shock and vibration are maximum values and must not be applied continuously. These values only apply to mounting using screws.

5.6.6 Dimension drawing

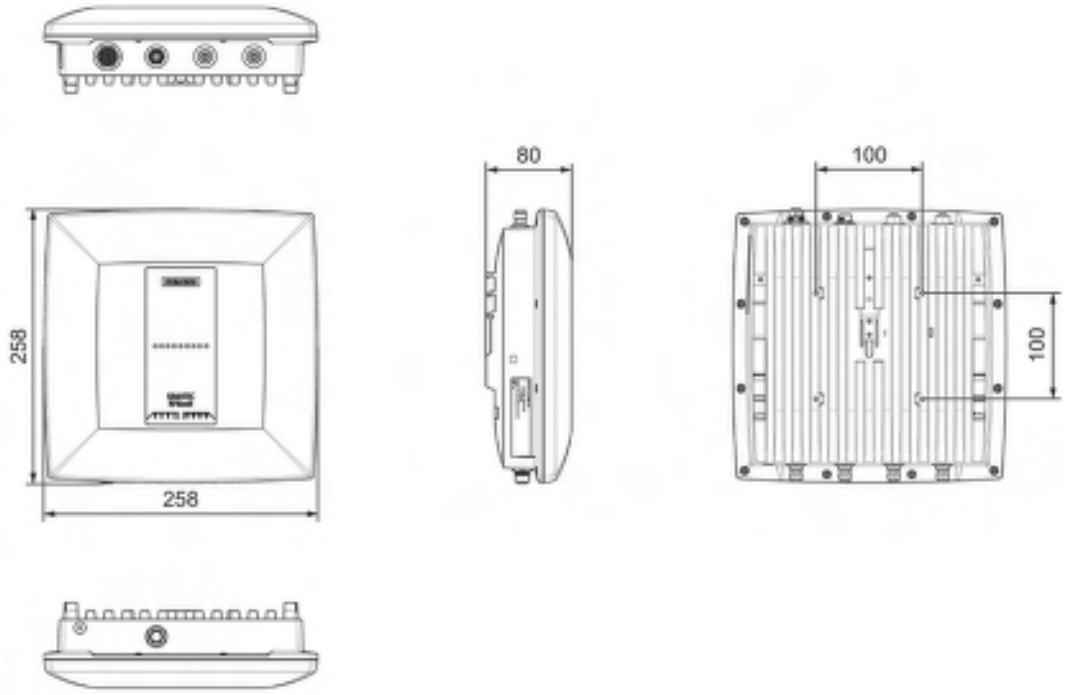

Figure 5-49 Dimension drawing RF685R

All dimensions in mm (± 0.5 mm tolerance)

5.6.7 Certificates and approvals

Note

Marking on the readers according to specific approval

The certificates and approvals listed here apply only if the corresponding mark is found on the readers.

Table 5- 56 6GT2811-6CA10-0AA0

Labeling	Description
CE	Conformity with the RED directive 2014/53/EU Conformity with the RoHS directive 2011/65/EU
ICASA	South Africa radio approval: Radio Equipment Type Approval
India	India wireless approval Marking on the reader: No. NR-ETA/1589
EAC	Radio approval for Russia, Belarus, Kazakhstan

Table 5- 57 6GT2811-6CA10-1AA0

Labeling	Description
FC Federal Communications Commission	FCC CFR 47, Part 15 section 15.247 Radio Frequency Interference Statement This equipment has been tested and found to comply with the limits for a Class A digital device, pursuant to Part 15 of the FCC Rules. FCC ID: NXW-RF600R2
Industry Canada Radio Standards Specifications	RSS-210 Issue 6, Section 2.2, A8 IC: 267X-RF600R2, Model: RF685R
UL C US	This product is UL-certified for the USA and Canada. It meets the following safety standard(s): UL 60950-1 - Information Technology Equipment Safety - Part 1: General Requirements CSA C22.2 No. 60950 -1 - Safety of Information Technology Equipment UL Report E 115352

Labeling	Description
	Brazil radio approval Marking on the reader (6GT2811-6CA10-1AA0): Statement about approval: Este equipamento opera em caráter secundário, isto é, não tem direito à proteção contra interferência prejudicial, mesmo de estações do mesmo tipo e não pode causar interferência a sistemas operando em caráter primário. Reader certificate: ANATEL 2892-15-4794
	KCC Certification Type of equipment: A급 기기 (업무용 방송통신기자재) Class A Equipment (Industrial Broadcasting & Communication Equipment) 이 기기는 업무용(A급) 전자파적합기기로서 판 매자 또는 사용자는 이 점을 주의하시기 바라 며, 가정외의 지역에서 사용하는 것을 목적으로 합니다. This equipment is Industrial (Class A) electromagnetic wave suitability equipment and seller or user should take notice of it, and this equipment is to be used in the places except for home. Certificate of the reader: MSIP-CMM-RF5-RF685R
HC-141617	Argentina radio approval: Registro de la COMISION NACIONAL DE COMUNICACIONES
RCPSISI14-1926-A2	Mexico radio approval: CERTIFICADO DE HOMOLOGACION, IFETEL
	Australia radio approval: This product meets the requirements of the AS/NZS 3548 Norm.

Table 5- 58 6GT2811-6CA10-2AA0

Standard	
CMIIT Certification	China radio approval Marking on the reader: CMIIT ID: 2014DJ3989

5.6.7.1 FCC information

Siemens SIMATIC RF685R (FCC): 6GT2811-6CA10-1AA0

FCC ID: NXW-RF600R2

This device complies with part 15 of the FCC rules. Operation is subject to the following two conditions:

(1) This device may not cause harmful interference, and

(2) this device must accept any interference received, including interference that may cause undesired operation.

Caution

Any changes or modifications not expressly approved by the party responsible for compliance could void the user's authority to operate the equipment.

Note

This equipment has been tested and found to comply with the limits for a Class B digital device, pursuant to part 15 of the FCC Rules.

These limits are designed to provide reasonable protection against harmful interference when the equipment is operated in a commercial environment. This equipment generates, uses, and can radiate radio frequency energy and, if not installed and used in accordance with the instruction manual, may cause harmful interference to radio communications. Operation of this equipment in a residential area is likely to cause harmful interference in which case the user will be required to correct the interference at his own expense.

FCC Notice

To comply with FCC part 15 rules in the United States, the system must be professionally installed to ensure compliance with the Part 15 certification.

It is the responsibility of the operator and professional installer to ensure that only certified systems are deployed in the United States. The use of the system in any other combination (such as co-located antennas transmitting the same information) is expressly forbidden.

FCC Exposure Information

To comply with FCC RF exposure compliance requirements, the antennas used for this transmitter must be installed to provide a separation distance of at least 20 cm from all persons and must not be co-located or operating in conjunction with any other antenna or transmitter.

5.6.7.2 IC-FCB information

Siemens SIMATIC RF685R (FCC): 6GT2811-6CA10-1AA0

IC: 267X-RF600R2

This device complies with Industry Canada licence-exempt RSS standard(s). Operation is subject to the following two conditions:

(1) This device may not cause interference, and

(2) this device must accept any interference, including interference that may cause undesired operation of the device.

Le présent appareil est conforme aux CNR d`Industrie Canada applicables aux appareils radio exempts de licence. L`exploitation est autorisée aux deux conditions suivantes :

(1) L`appareil ne doit pas produire de brouillage, et

(2) l'utilisateur de l`appareil doit accepter tout brouillage radioélectrique subi, même si le brouillage est susceptible d`en compromettre le fonctionnement.

Industry Canada Notice

To reduce potential radio interference to other users, the antenna type and its gain should be so chosen that the equivalent isotropically radiated power (e.i.r.p.) is not more than that permitted for successful communication.

Transmitter power and antenna information for antennas with a gain less than 6 dBi:

This device has been designed to operate with the SIMATIC RF620A antenna 902-928, the SIMATIC RF640A antenna 902-928 as well as the SIMATIC RF660A antenna 902-928 listed below, and having a maximum gain of 5,5 dBi. Arbitrary transmission power settings in combination with other antennas or antennas having a gain greater than 5,5 dBi are strictly prohibited for use with this device. The required antenna impedance is 50 Ohms.

Transmitter power and antenna information for antennas with a gain greater 6 dBi:

This device requires professional installation. Antennas with a gain greater 6 dBi may be used provided the system does not exceed the radiation power of 4000 mW E.I.R.P. This device has been designed to operate with the SIMATIC RF642A antenna 902-928 exceeding the maximum gain of 5,5 dBi under the restriction that the RF power at the input of the antenna must be set to meet the following relation: RF power (dBm) ≤ 30 dBm – (antenna gain (dBi) – 6 dBi) Other antennas or system configurations for antennas having a gain greater than 6 dBi are strictly prohibited for use with this device. The required antenna impedance is 50 Ohms.

5.7 SIMATIC RF650M

5.7.1 Description

SIMATIC RF650M expands the RF600 identification system with a powerful mobile reader for applications in the areas of logistics, production and service. In addition, it is an indispensable aid for startup and testing.

5.7.2 Field of application and features

Device variants for different frequency ranges

The SIMATIC RF650M device is available in two variants:

- for the frequency range ETSI (6GT2813-0CA00)
- for the frequency range FCC (6GT2813-0CA10)

Implementation environment, field of application and features

- **Field of application**

  Due to its protection class IP65 the handheld terminal SIMATIC RF650M is also suitable for use in a harsh environment. The device is extremely rugged and protected against spray water. The backlit display is easy to read even under unfavorable lighting conditions.

- **RFID system**

  The device can be used to process all RF600 transponders and transponders compatible with them.

- **Radio transmission protocols**

  The following radio transmission protocols are supported:

  – ISO 18000-63

- **API software interface**

  The SIMATIC RF650M Mobile handheld terminal is supplied with an API software interface that can be used by customized user programs.

You can perform the following functions with the SIMATIC RF650M handheld terminal:

Functions

- Reading the EPC-ID
- Writing the EPC-ID to a transponder
- Reading data from the transponder
- Writing the data to the transponder
- Reading and displaying the ID number of the transponder (identify transponder)
- Localizing transponders
- Representing and editing the data in hexadecimal and ASCII format
- Password protection for all write functions that can be enabled or disabled (Write, Lock, Kill)
- Menu guidance in English and German (switchable)
- Easy creation of your own RFID applications with the software "Application Interface" (API)

You will find further information on the RF650M handheld terminal in the operating instructions "SIMATIC RF650M mobile handheld terminal (https://support.industry.siemens.com/cs/ww/en/view/109475735)".

Antennas

6

6.1 Overview

The following table shows the most important features of the RF600 antennas at a glance:

Table 6- 1 Characteristics of the RF615A, RF620A and RF660A antennas

Characteristics	RF615A		RF620A		RF660A	
Material	PA 6, silicone-free		PA 12, silicone-free			
Frequency range	865-868 MHz	902-928 MHz	865-868 MHz	902-928 MHz	865-868 MHz	902-928 MHz
Impedance	50 ohms nominal					
Antenna gain	-13 ... -5 dBi [1]		-10 ... -5 dBi [1]		7 dBi	6 dBi
VSWR (standing wave ratio)	2:1 max.					
Polarization	Linear				RH circular	
Radiating/receiving angle	Depending on the mounting surface				55° - 60°	60° - 75°
Connector	RP-TNC coupling					
Mounting type	2 x M4 screws		2 x M5 screws		4x screws M4 (VESA 100 fastening system)	
Degree of protection	IP67 (IP rating is not investigated by UL)		IP67			
Permissible ambient temperature	-20 °C ... +70 °C				-25 °C ... +75 °C	

[1] Lowest values apply when mounted on non-metallic surfaces; the higher values apply when mounted on metallic surfaces.

Table 6- 2 Characteristics of the RF640A and RF642A antennas

Characteristics	RF640A		RF642A	
Material	PA 12, silicone-free			
Frequency range	865-868 MHz	902-928 MHz	865-868 MHz	902-928 MHz
Impedance	50 ohms nominal			
Antenna gain	4 dBi (7 dBic)	4.3 dBi (7.3 dBic)	6 dBi	7 dBi
VSWR (standing wave ratio)	Max. 1.25	Max. 1.6	Max. 1.4	
Polarization	RH circular		Linear	
Radiating/receiving angle	Horiz. plane: 80°	Horiz. plane: 75°	Horiz. plane: 75°	Horiz. plane: 80°
	Vertic. plane: 75°	Vertic. plane: 85°	Vertic. plane: 70°	Vertic. plane: 70°
Connector	RP-TNC coupling			
Mounting type	4x screws M4 (VESA 100 fastening system)			
Degree of protection	IP65			
Permissible ambient temperature	-25 °C ... +75 °C			

Table 6- 3 Characteristics of the RF650A and RF680A antennas

Characteristics	RF650A		RF680A	
Material	Pocan DPCF2200, silicone free			
Frequency range	865-868 MHz	902-928 MHz	865-868 MHz	902-928 MHz
Impedance	50 ohms nominal			
Antenna gain	4 dBi (7 dBic)	3.5 dBi (6.5 dBic)	3.5 dBi (6.5 dBic)	3.5 dBi (6.5 dBic)
VSWR (standing wave ratio)	Max. 1.45		Max. 1.45	
Polarization	RH circular		RH circular / linear	
Radiating/receiving angle	Horiz. plane: 83°	Horiz. plane: 90°	Horiz. plane: 85°	Horiz. plane: 90°
	Vertic. plane: 70°	Vertic. plane: 76°	Vertic. plane: 80°	Vertic. plane: 77°
Connector	RP-TNC coupling			
Mounting type	4x screws M4 (VESA 100 fastening system)			
Degree of protection	IP65			
Permissible ambient temperature	-25 °C ... +75 °C			

6.2 SIMATIC RF615A

6.2.1 Characteristics

SIMATIC RF615A	Characteristics	
	Area of application	The SIMATIC RF615A is a universal UHF antenna in a compact size for industrial applications, e.g. for installation directly on the robot arm.
	Frequency range	• 865 to 868 MHz (RF615A ETSI) • 902 to 928 MHz (RF615A FCC)
	Read range	Max. 2 m
	Polarization	Linear
	Degree of protection	IP67 (IP rating is not investigated by UL)
	Mounting	2 x M4
	Connection	30 cm connecting cable (connected permanently to the antenna) and RP-TNC coupling An antenna cable is required for connection to the reader (e.g. 6GT2815-0BH30).

Frequency ranges

The antenna is a narrowband antenna and is available in the following two frequency range variants.

- RF615A ETSI: 865 to 868 MHz
- RF615A FCC: 902 to 928 MHz

Function

The SIMATIC RF615A is used for transmitting and receiving data in the UHF range. The antennas are connected to the SIMATIC RF600 readers via antenna cables that are available in different lengths.

6.2.2 Ordering data

Table 6- 4 RF615A ordering data

Product	Article number
SIMATIC RF615A (ETSI)	6GT2812-0EA00
SIMATIC RF615A (FCC)	6GT2812-0EA01

Table 6- 5 Ordering data accessories

Product		Article number
Connecting cable between reader and antenna	1 m (cable loss 0.5 dB)	6GT2815-0BH10
	3 m (cable loss 1.0 dB)	6GT2815-0BH30
	5 m, suitable for drag chains (cable loss 1.5 dB)	6GT2815-2BH50
	10 m (cable loss 2.0 dB)	6GT2815-1BN10
	10 m (cable loss 4.0 dB)	6GT2815-0BN10
	15 m, suitable for drag chains (cable loss 4.0 dB)	6GT2815-2BN15
	20 m (cable loss 4.0 dB)	6GT2815-0BN20
	40 m (cable loss 5.0 dB)	6GT2815-0BN40

6.2.3 Mounting

Two holes for M4 screws are provided for mounting the antenna. The antenna is suitable for mounting on metallic and non-metallic surfaces.

Note

Maximum read/write range

The maximum read/write ranges are only reached when the antenna is mounted on a metallic surface with a minimum size of 150 x 150 mm.

Note

Antenna gain depends on the mounting surface

Note that the antenna gain depends on the material of the mounting surface. If the antenna is mounted on a metallic surface, the antenna gain is -5 dBi. If the antenna is mounted on a non-metallic surface, the antenna gain is -13 dBi.

6.2.4 Connecting the antenna

The SIMATIC RF615A antenna must be connected to the reader using an antenna cable.

Preassembled standard cables in lengths of 1 m, 3 m, 5 m, 10 m, 15 m, 20 m and 40 m are available to connect the antenna.

The range of the antenna is limited by the cable loss. The maximum range can be achieved with the cable 6GT2815-0BH10 (length 1 m), since this cable has the lowest cable loss.

Requirement

Note

Use of Siemens antenna cable

To ensure optimum functioning of the antenna, it is recommended that a Siemens antenna cable is used in accordance with the list of accessories.

Strain relief

To protect the antenna connecting cable from strain, you can attach strain relief, e.g. in the form of a strain relief clamp. The following graphic shows the optimum mounting point for attaching strain relief.

① RF615A antenna connecting cable
② RF600 antenna cable
③ Mounting point for strain relief

Figure 6-1 Strain relief

The following listed bending radii are minimum values, which may not be fallen below and are based on repeated bending.

Table 6- 6 Bending radii of the antenna cable

Cable designa-tion	Article number	Length [m]	Cable loss [dB]	Bending radius [mm]
Antenna cable	6GT2815-0BH10	1	0.5	51
Antenna cable	6GT2815-0BH30	3	1	51
Antenna cable (suitable for drag chains)	6GT2815-2BH50	5	1.5	45 1) 2)
Antenna cable	6GT2815-1BN10	10	2	77
Antenna cable	6GT2815-0BN10	10	4	51

Cable designa-tion	Article number	Length [m]	Cable loss [dB]	Bending radius [mm]
Antenna cable (suitable for drag chains)	6GT2815-2BN15	15	4	45 [1] [2]
Antenna cable	6GT2815-0BN20	20	4	77
Antenna cable	6GT2815-0BN40	40	5	77

[1] Permissible minimum bending radius with one-time bending. 28 mm

[2] With cables capable of being used in drag chains, 100,000 bending cycles at a bending radius of 100 mm and a bend of ± 180° or 3 million torsion cycles with a bend of ± 180° on a cable length of 1 m are permitted.

6.2.5 Antenna parameter assignment

Depending on the country or region in which the antenna is being operated, it is subject to regional limitations with respect to the radiated power.

Limitations in the EU, EFTA, or Turkey

Note

Limitation of the radiated power according to EN 302 208 V1.4.1 (ETSI)

RF600 systems that are put into operation in the EU, EFTA or Turkey must not exceed the following radiated power with an RF615A antenna:

- 500 mW ERP (or 27 dBm ERP)

  Converted into EIRP: 820 mW EIRP (or 29 dBm EIRP)

Make the following settings to ensure that the maximum permitted radiated power of the antenna is not exceeded:

- Antenna gain: -5 dBi
- Radiated power: ≤ 340 mW ERP (or 25.35 dBm ERP)

  Converted into EIRP: ≤ 560 mW EIRP (or 27.5 dBm EIRP)
- Use of cable loss associated with the antenna cable.

Limitations in the USA and Canada

Note

Limitation of the radiated power (FCC)

RF600 systems that are put into operation in the USA and Canada must not exceed the following radiated power with an RF615A antenna:

- 4000 mW EIRP (or 36 dBm EIRP)

Make the following settings to ensure that the maximum permitted radiated power of the antenna is not exceeded:

- Conducted power P (dBm) of the RF600 reader: < 30 dBm
- Antenna gain G_i (dBi) in the FCC frequency band: ≤ -5 dBi
- Cable loss a_k (dB): ≥ 1 dB

$P\ (dBm) \leq 30\ dBm - (G_i - 6\ dBi) + a_k$

Limitations in China

Note

Limitation of the radiated power (CMIIT)

RF600 systems that are put into operation in China must not exceed the following radiated power with an RF615A antenna:

- 2000 mW ERP (or 33 dBm ERP)
  Converted into EIRP: 3250 mW EIRP (or 35 dBm EIRP)

Make the following settings to ensure that the maximum permitted radiated power of the antenna is not exceeded:

- Radiated power: ≤ 2000 mW ERP (or 33 dBm ERP)

  Converted into EIRP: ≤ 3250 mW EIRP (or 35 dBm EIRP)
- Use of cable loss associated with the antenna cable.

Limitations in Japan

Note

Limitation of the radiated power (ARIB)

RF600 systems that are put into operation in Japan must not exceed the following radiated power with an RF615A antenna:

- 500 mW EIRP (or 27 dBm EIRP) for operation with RF650R (ARIB STD-T107)
- 4000 mW EIRP (or 36 dBm EIRP) for operation with RF680R/RF685R (ARIB STD-T106)

The maximum permissible radiated power of the antenna cannot be reached or exceeded due to the negative antenna gain.

6.2.6 Antenna patterns

6.2.6.1 Alignment of transponders to the antenna

Polarization axis

Since the RF615A antenna has linear polarization, it is necessary to consider the alignment of the transponders with regard to the polarization axis of the antenna.

The polarization axes of antenna and transponder must always be parallel. The symbol on the antenna indicates the polarization axis.

Figure 6-2 Polarization axis

Alignment

The following diagram shows the optimum alignment of the RF600 transponders to the RF615A antenna.

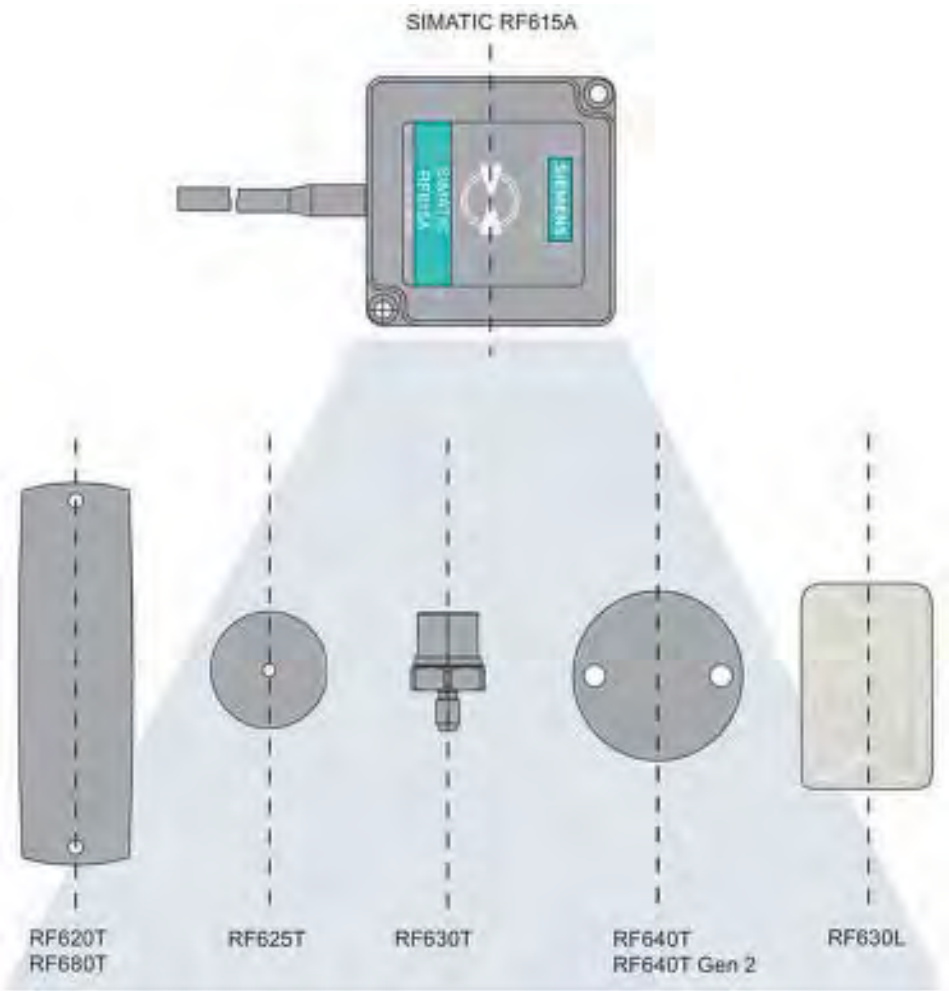

Figure 6-3 Optimum alignment of transponders to the antenna

Angle deviation diagram for alignment

The following diagram shows the dependence of the following factors:

- Alignment angle of transponder to antenna
- Maximum range of antenna

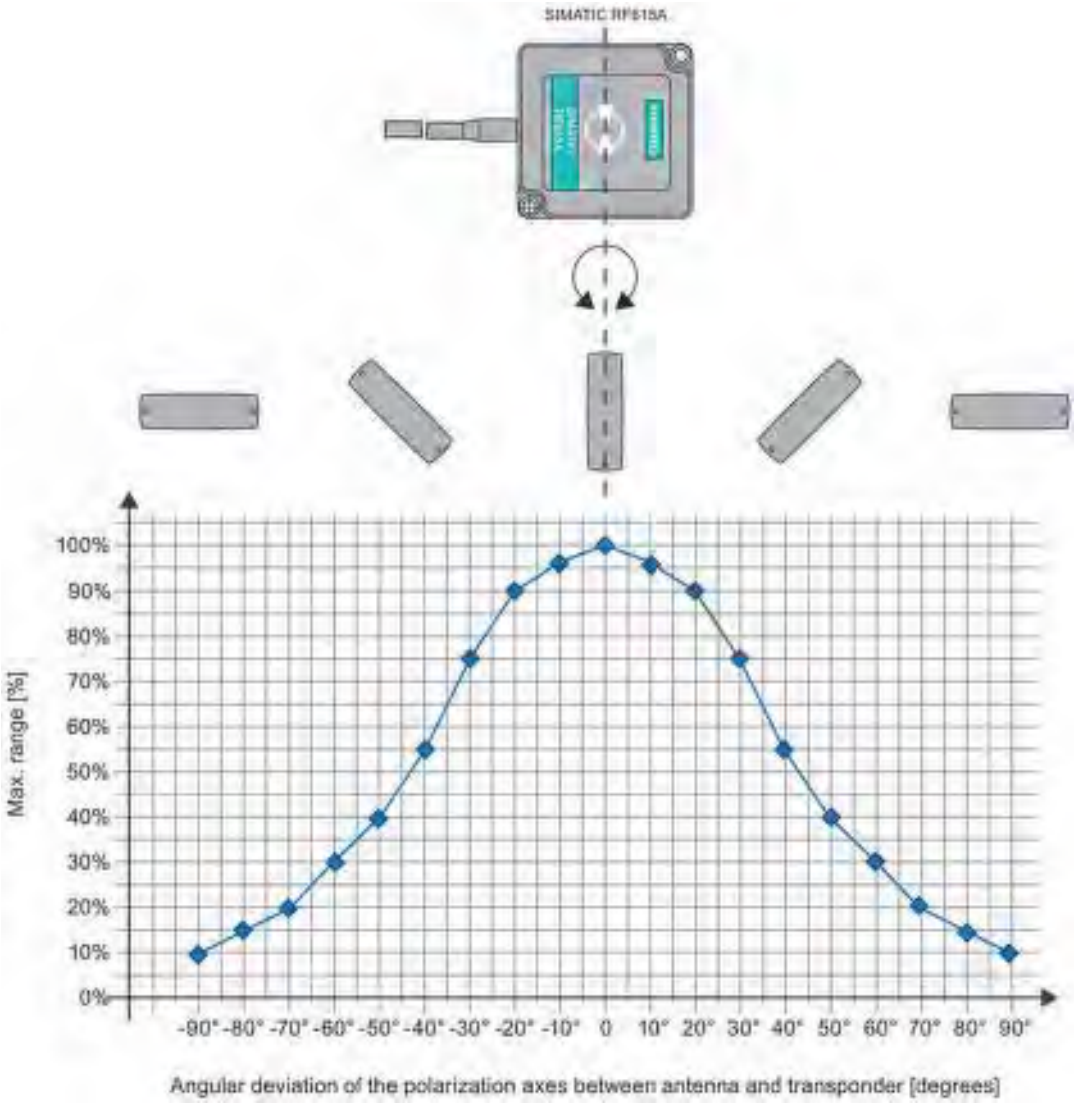

Figure 6-4 Effect on the read/write range depending on the antenna alignment

6.2.6.2 Antenna pattern ETSI

Directional radiation pattern ETSI

The directional radiation pattern is shown for nominal alignment and a center frequency of 866.3 MHz. The nominal antenna alignment is given when the antenna elevation is provided as shown in the following figure.

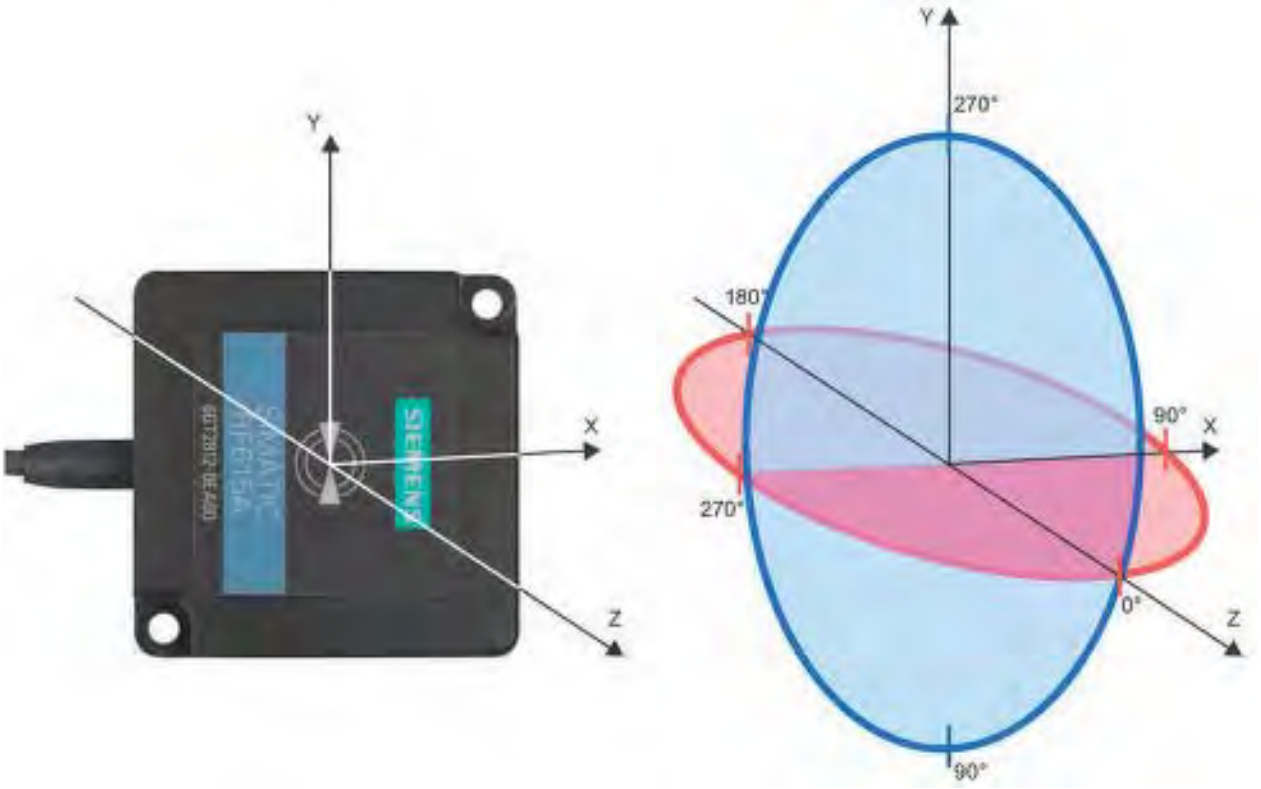

Figure 6-5 Reference system

The half-power beam width of the antenna is defined by the angle between the two -3 dB points. The range (in %) corresponding to the dB values in the patterns can be obtained from this table .

Note that the measurements presented graphically below were carried out in a low-reflection environment. Deviations can therefore occur in a normally reflecting environment.

Directional radiation pattern ETSI on metallic mounting surface (15 cm x 15 cm)

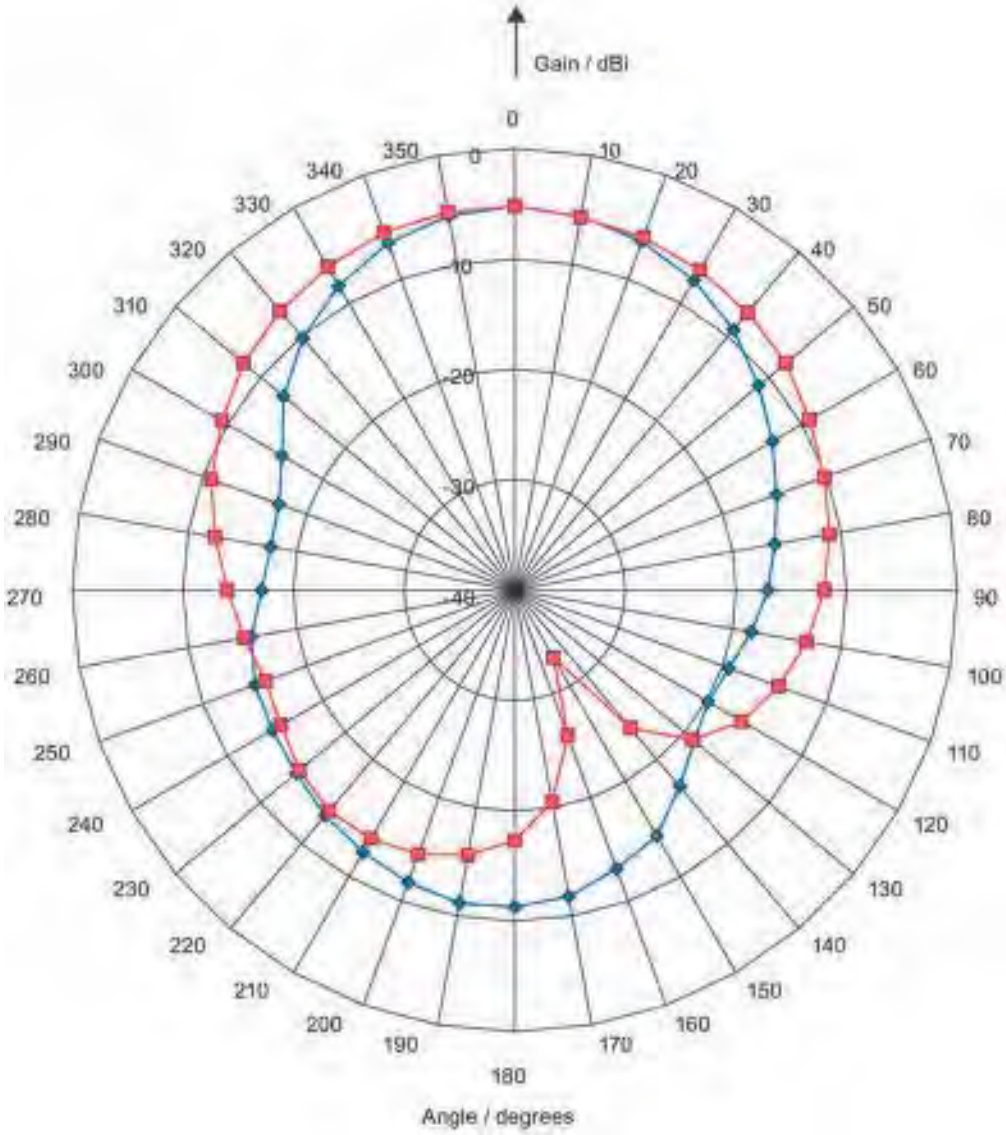

Pattern of the vertical plane of the antenna

Pattern of the horizontal plane of the antenna

Figure 6-6 Directional radiation pattern RF615A ETSI on metallic mounting surface

Directional radiation pattern ETSI on non-metallic mounting surface

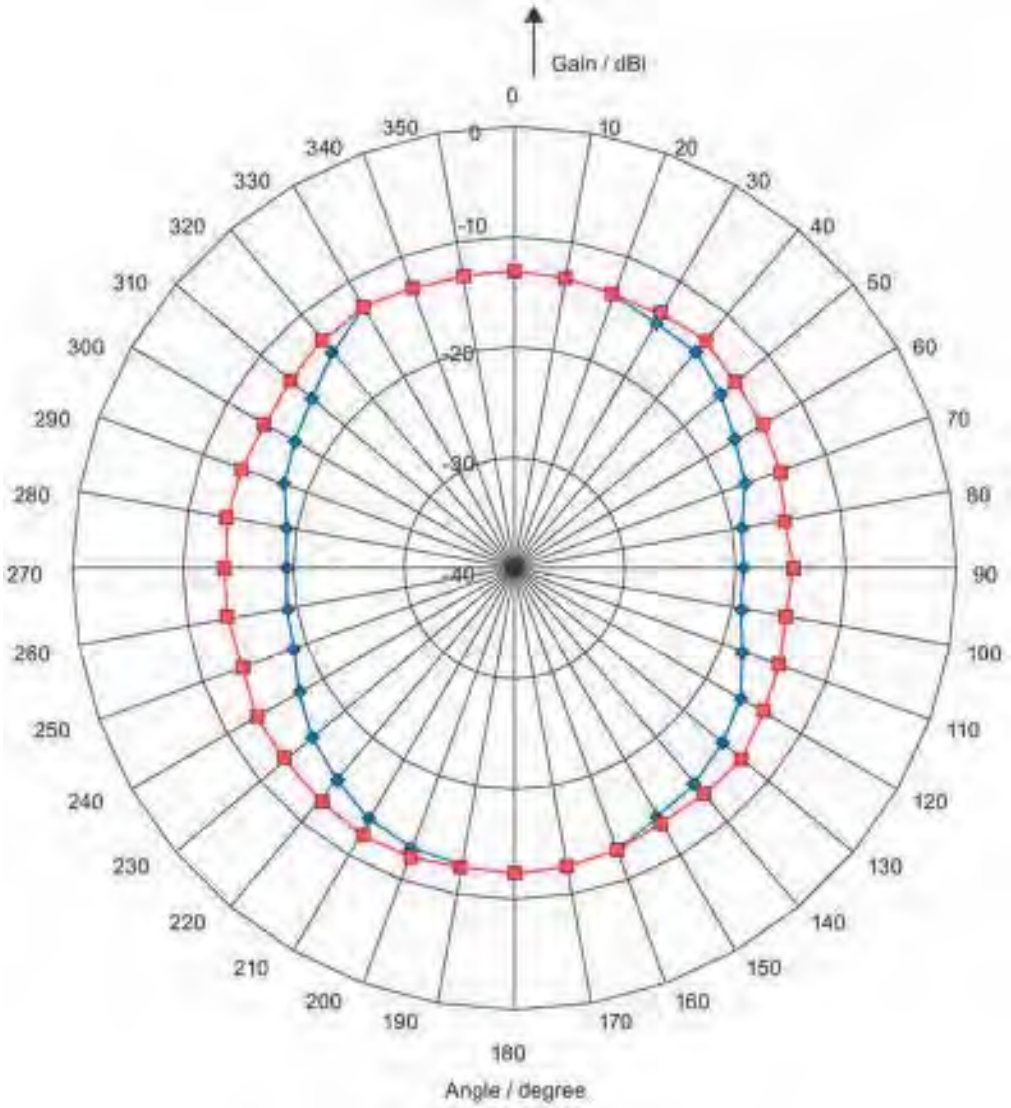

Pattern of the vertical plane of the antenna

Pattern of the horizontal plane of the antenna

Figure 6-7 Directional radiation pattern RF615A ETSI on non-metallic mounting surface

6.2.6.3 Antenna pattern FCC

Directional radiation pattern FCC

The directional radiation pattern is shown for nominal alignment and a center frequency of 915 MHz.

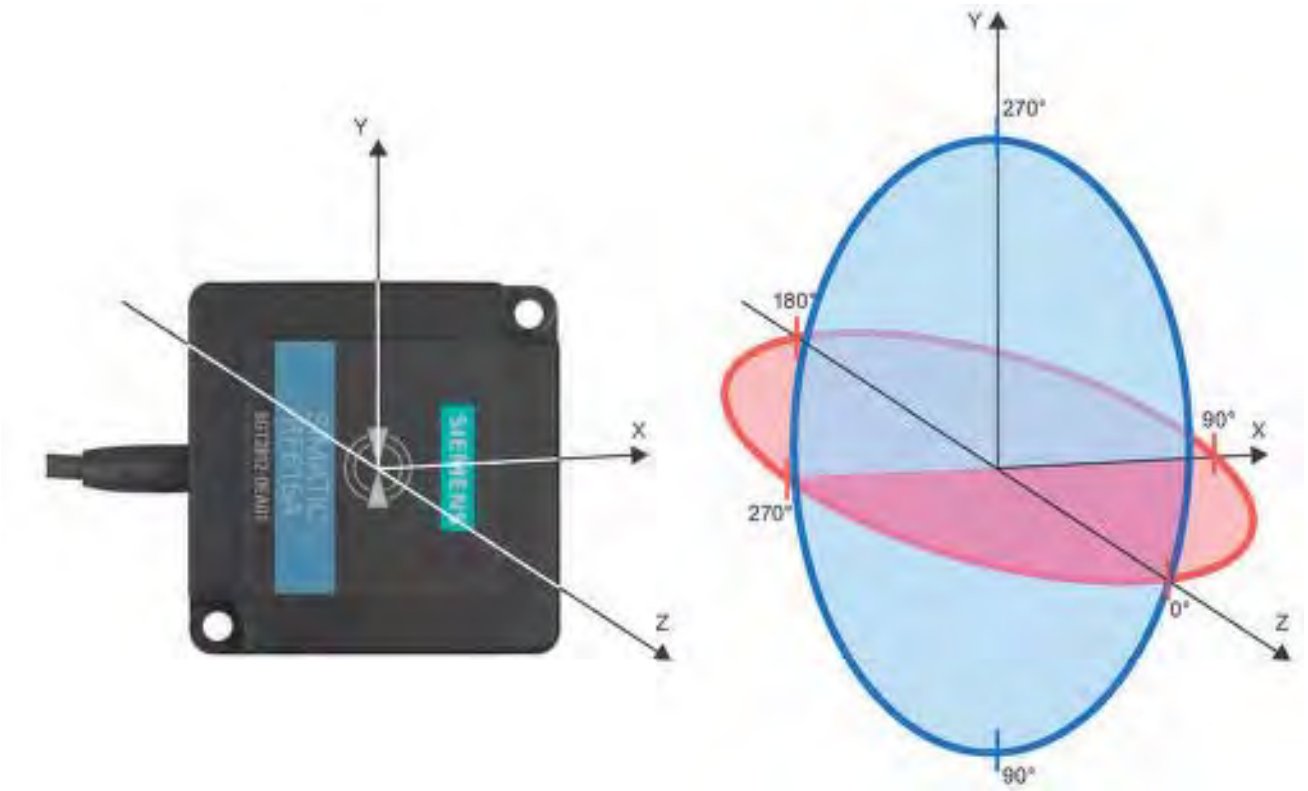

Figure 6-8 Reference system

The half-power beam width of the antenna is defined by the angle between the two -3 dB points (corresponding to half the power in relation to the maximum power). Which range (in %) corresponds to the dB values in the patterns can be obtained from this table .

Note that the measurements presented graphically below were carried out in a low-reflection environment. Low deviations can therefore occur in a normally reflecting environment.

Directional radiation pattern of the RF615A (FCC) on metallic mounting surface (15 cm x 15 cm)

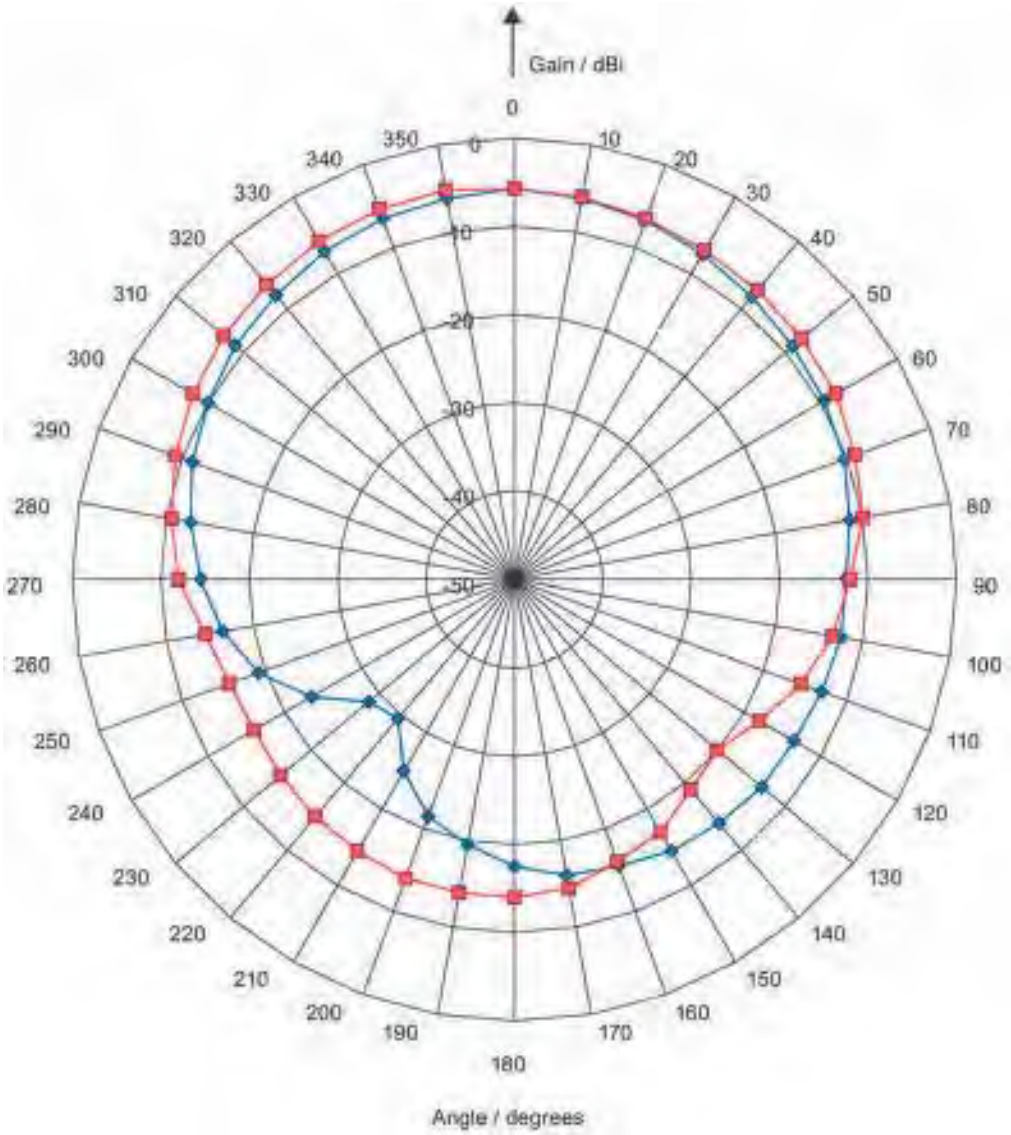

Pattern of the vertical plane of the antenna

Pattern of the horizontal plane of the antenna

Figure 6-9 Directional radiation pattern of the RF615A (FCC) on metallic mounting surface

Directional radiation pattern of the RF615A (FCC) on non-metallic mounting surface

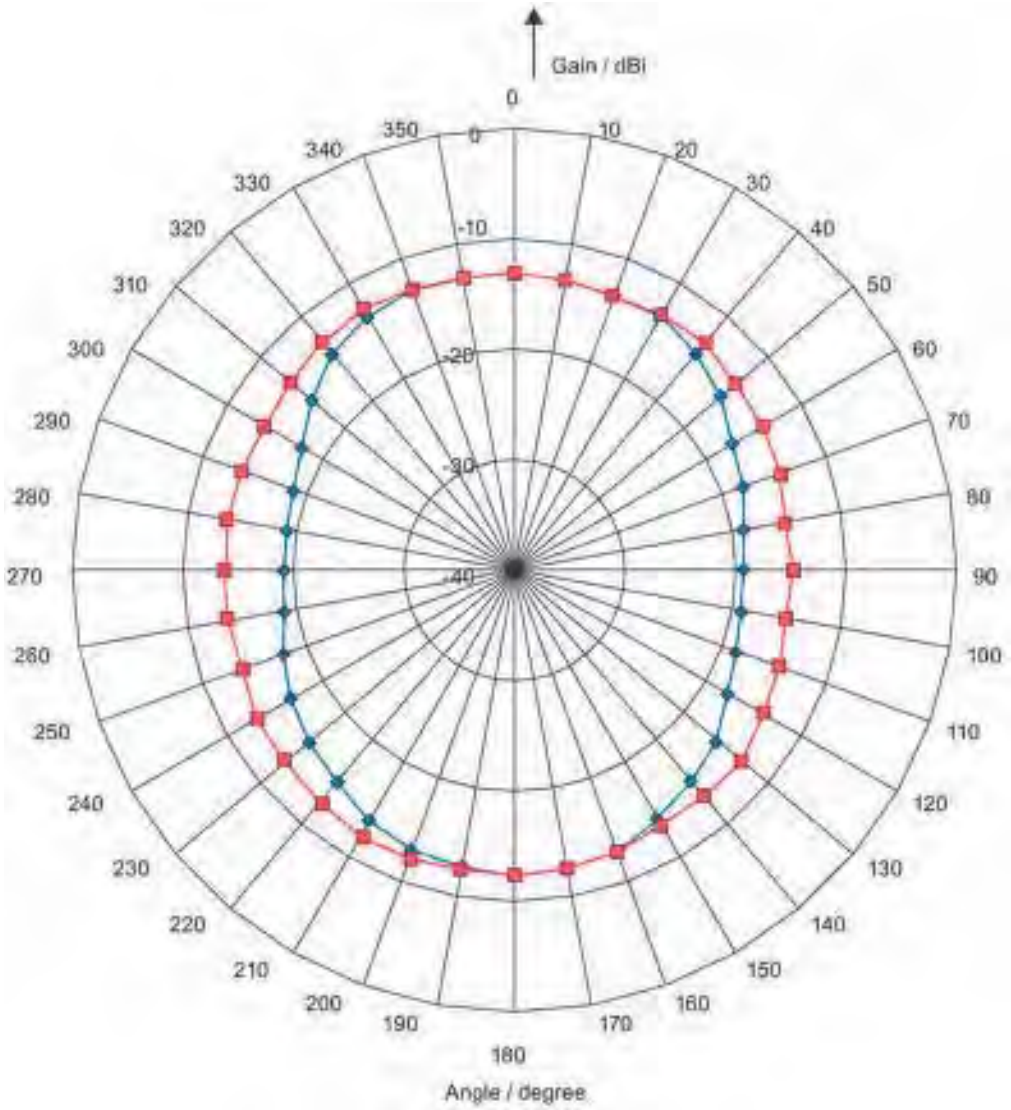

Pattern of the vertical plane of the antenna

Pattern of the horizontal plane of the antenna

Figure 6-10 Directional radiation pattern of the RF615A (FCC) on non-metallic mounting surface

6.2.6.4 Interpretation of directional radiation patterns

The following overview table will help you with the interpretation of directional radiation patterns.

The table shows which dBi values correspond to which read/write ranges (in %): You can read the radiated power depending on the reference angle from the directional radiation patterns, and thus obtain information on the read/write range with this reference angle with regard to a transponder.

The dBr values correspond to the difference between the maximum dBi value and a second dBi value.

Deviation from maximum antenna gain [dBr]	Read/write range [%]
0	100
-3	70
-6	50
-9	35
-12	25
-15	18
-18	13

Example

As can be seen from the Antenna pattern ETSI (Page 241), the maximum antenna gain is -5 dBi. In the vertical plane, the antenna gain has dropped to approx. -11 dBi at +50°. This means that the dBr value is -6. The antenna range is only 50% of the maximum range at + 50° from the Z axis within the vertical plane (see line shown in blue in the directional radiation pattern: Characteristic of the vertical plane of the antenna and the associated representation of the reference system).

6.2.7 Technical data

Table 6- 7 Technical specifications for the RF615A antenna

	6GT2812-0EA0x
Product type designation	SIMATIC RF615A
Radio frequencies	
Operating frequency	
• ETSI	• 865 to 868 MHz
• FCC	• 902 to 928 MHz
Maximum radiated power	
• ETSI	• ≤ 340 mW ERP
• FCC	• ≤ 560 mW EIRP
• CMIIT	• ≤ 340 mW ERP
• ARIB	• STD-T107: RF650R: ≤ 500 mW EIRP • STD-T106: RF680R/RF685R: < 560 mW EIRP
Antenna gain	-13 dBi ... -5 dBi
• ETSI	• Depends on background, refer to the section "Antenna pattern ETSI (Page 241)"
• FCC	• Depends on background, refer to the section "Antenna pattern FCC (Page 244)"
Opening angle for sending/receiving when mounted on a metal surface of 15 cm x 15 cm [1)]	
• ETSI	• Horizontal plane: 100° Vertical plane: 75° see section "Antenna pattern ETSI (Page 241)"
• FCC	• Horizontal plane: 130 Vertical plane: 105° see section "Antenna pattern FCC (Page 244)"

	6GT2812-0EA0x
Electrical data	
Range	See section "Maximum read/write ranges of transponders (Page 59)"
Impedance	50 Ω
Polarization	Linear
VSWR (standing wave ratio)	≤ 2:1
Power	
• ETSI	• ≤ 2 W
• FCC	• ≤ 1 W
Interfaces	
Plug connection	30 cm coaxial cable with RP-TNC coupling (for connection of the antenna cable)
Mechanical specifications	
Material	PA6 V0, silicone-free
Color	Black
Tightening torque (at room temperature)	≤ 1.5 Nm (when mounted on a flat surface)
Permitted ambient conditions	
Ambient temperature	
• During operation	• -20 ... +70 °C
• During transportation and storage	• -40 ... +85 °C
Conditions relating to UL approval	• for indoor use only (dry location) • mounted on height below 2 m • Coaxial connectors and cables shall comply with NFPA70 art. 820 part V
Degree of protection	IP67 (IP rating is not investigated by UL)
Shock resistant to EN 60068-2-27	50 g [2)]
Vibration to EN 60068-2-6	20 g [2)]
Design, dimensions and weight	
Dimensions (H x W x D)	52 x 52 x 16 mm
Weight	60 g

	6GT2812-0EA0x
Standards, specifications, approvals	
Proof of suitability	FCC: cULus
MTBF	1190 years

1) The values differ for different dimensions/materials of the mounting surface.

2) The values for shock and vibration are maximum values and must not be applied continuously.

6.2.8 Dimension drawing

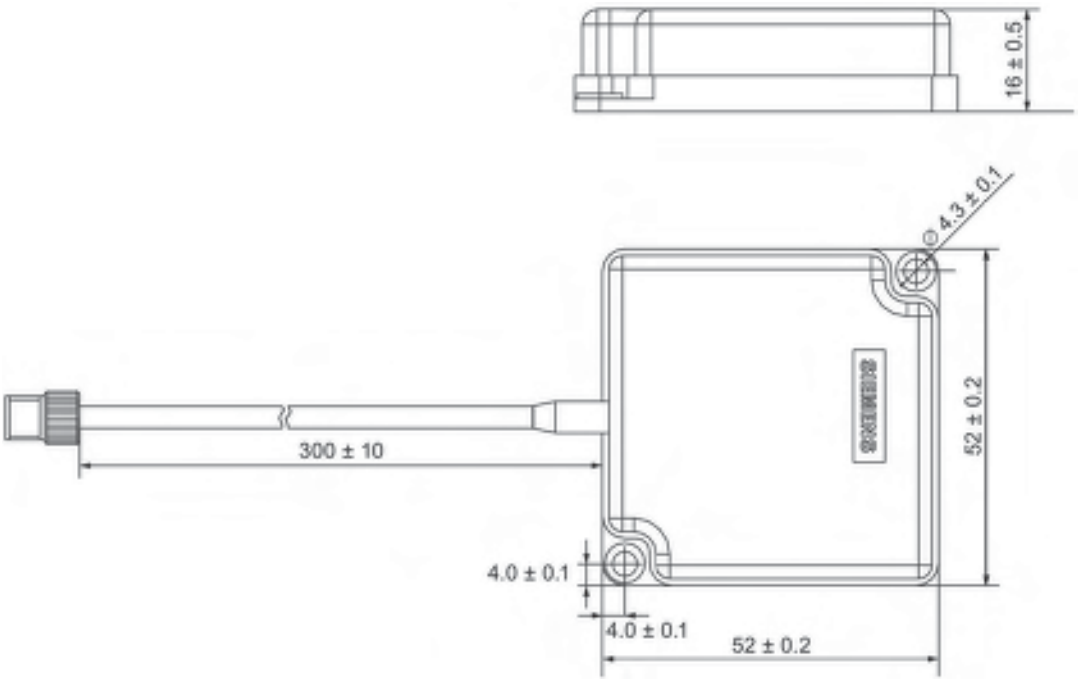

Figure 6-11 Dimension drawing RF615A

All dimensions in mm

6.2.9 Certificates & approvals

Table 6- 8 6GT2812-0EA00

Labeling	Description
CE	Conformity with the RED directive 2014/53/EU Conformity with the RoHS directive 2011/65/EU

Table 6- 9 6GT2812-0EA01

Labeling	Description
FC Federal Communications Commission	FCC CFR 47, Part 15 sections 15.247 Radio Frequency Interference Statement This equipment has been tested and found to comply with the limits for a Class B digital device, pursuant to Part 15 of the FCC Rules. The FCC approval is granted in association with the FCC approval of the following RF600 readers: • FCC ID: NXW-RF600R2 (for RF650R: 6GT2811-6AB20-1AA0, RF680R: 6GT2811-6AA10-1AA0, RF685R: 6GT2811-6CA10-1AA0)
Industry Canada Radio Standards Specifications	RSS-210 Issue 7, June 2007, Sections 2.2, A8 The approval for Industry Canada is granted in association with the Industry Canada approval of the following RF600 readers: • IC: 267X-RF600R2, Model RF650R (for 6GT2811-6AB20-1AA0) • IC: 267X-RF600R2, Model RF680R (for 6GT2811-6AA10-1AA0) • IC: 267X-RF600R2, Model RF685R (for 6GT2811-6CA10-1AA0)
UL C US	This product is UL-certified for the USA and Canada. It meets the following safety standard(s): • UL Report E115352 • UL 62368-1 - AVICT Equipment - Part 1: Safety Requirements • CSA C22.2 No. 62368-1-14 AVICT Equipment - Part 1: Saftey Requirements

6.3 SIMATIC RF620A

6.3.1 Characteristics

SIMATIC RF620A	Characteristics	
	Area of application	The SIMATIC RF620A is a universal UHF antenna in a compact size for industrial applications in limited installation spaces.
	Frequency range	• 865 to 868 MHz (RF620A ETSI) • 902 to 928 MHz (RF620A FCC)
	Read range	Max. 2 m
	Polarization	Linear
	Degree of protection	IP67
	Mounting	2x M5
	Connector	30 cm connecting cable (connected permanently to the antenna) and RP-TNC coupling An antenna cable is required for connection to the reader (e.g. 6GT2815-0BH30).

Frequency ranges

The antenna is a narrowband antenna and is available in the following two frequency range variants.

- RF620A ETSI: 865 to 868 MHz
- RF620A FCC: 902 to 928 MHz

Function

The SIMATIC RF620A is used for transmitting and receiving data in the UHF range. The antennas are connected to the SIMATIC RF600 readers via antenna cables that are available in different lengths.

6.3.2 Ordering data

Table 6- 10 Ordering data RF620A

Product	Article number
SIMATIC RF620A (ETSI)	6GT2812-1EA00
SIMATIC RF620A (FCC)	6GT2812-1EA01

Table 6- 11 Ordering data accessories

Product		Article number
Connecting cable between reader and antenna	1 m (cable loss 0.5 dB)	6GT2815-0BH10
	3 m (cable loss 1.0 dB)	6GT2815-0BH30
	5 m, suitable for drag chains (cable loss 1.5 dB)	6GT2815-2BH50
	10 m (cable loss 2.0 dB)	6GT2815-1BN10
	10 m (cable loss 4.0 dB)	6GT2815-0BN10
	15 m, suitable for drag chains (cable loss 4.0 dB)	6GT2815-2BN15
	20 m (cable loss 4.0 dB)	6GT2815-0BN20
	40 m (cable loss 5.0 dB)	6GT2815-0BN40

6.3.3 Installation

Two holes for M5 screws are provided for mounting the antenna. The antenna is suitable for mounting on metallic and non-metallic surfaces.

Note

Achieving optimum wave propagation

To achieve optimum wave propagation, the antenna should not be surrounded by conducting objects. The area between antenna and transponder should also allow wave propagation without interference.

Note

Antenna gain depends on the mounting surface

Note that the antenna gain depends on the material of the mounting surface. If the antenna is mounted on a metallic surface, the antenna gain is -5 dBi. If the antenna is mounted on a non-metallic surface, the antenna gain is -10 dBi.

6.3.4 Connecting the antenna

The SIMATIC RF620A antenna must be connected to the reader using an antenna cable.

Preassembled standard cables in lengths of 1 m, 3 m, 5 m, 10 m, 15 m, 20 m and 40 m are available to connect the antenna.

The range of the antenna is limited by the cable loss. The maximum range can be achieved with the cable 6GT2815-0BH10 (length 1 m), since this cable has the lowest cable loss.

Requirement

Note

Use of Siemens antenna cable

To ensure optimum functioning of the antenna, it is recommended that a Siemens antenna cable is used in accordance with the list of accessories.

Strain relief

To protect the antenna connecting cable from strain, you can attach strain relief, e.g. in the form of a strain relief clamp. The following graphic shows the optimum mounting point for attaching strain relief.

① RF620A antenna connecting cable
② RF600 antenna cable
③ Mounting point for strain relief

Figure 6-12 Strain relief

6.3.4.1 Bending radii and bending cycles of the cable

The following listed bending radii are minimum values, which may not be fallen below and are based on repeated bending.

Table 6- 12 Bending radii of the antenna cable

Cable designa-tion	Article number	Length [m]	Cable loss [dB]	Bending radius [mm]
Antenna cable	6GT2815-0BH10	1	0.5	51
Antenna cable	6GT2815-0BH30	3	1	51
Antenna cable (suitable for drag chains)	6GT2815-2BH50	5	1.5	45 [1) 2)]

Cable designa-tion	Article number	Length [m]	Cable loss [dB]	Bending radius [mm]
Antenna cable	6GT2815-1BN10	10	2	77
Antenna cable	6GT2815-0BN10	10	4	51
Antenna cable (suitable for drag chains)	6GT2815-2BN15	15	4	45 [1) 2)]
Antenna cable	6GT2815-0BN20	20	4	77
Antenna cable	6GT2815-0BN40	40	5	77

1) Permissible minimum bending radius with one-time bending. 28 mm

2) With cables capable of being used in drag chains, 100,000 bending cycles at a bending radius of 100 mm and a bend of ± 180° or 3 million torsion cycles with a bend of ± 180° on a cable length of 1 m are permitted.

6.3.5 Antenna parameter assignment

Depending on the country or region in which the antenna is being operated, it is subject to regional limitations with respect to the radiated power.

Limitations in the EU, EFTA, or Turkey

Note

Limitation of the radiated power according to EN 302 208 V1.4.1 (ETSI)

RF600 systems that are put into operation in the EU, EFTA or Turkey must not exceed the following radiated power with an RF620A antenna:

- 500 mW ERP (or 27 dBm ERP)

  Converted into EIRP: 820 mW EIRP (or 29 dBm EIRP)

Make the following settings to ensure that the maximum permitted radiated power of the antenna is not exceeded:

- Antenna gain: -5 dBi
- Radiated power: ≤ 340 mW ERP (or 25.35 dBm ERP)

  Converted into EIRP: ≤ 560 mW EIRP (or 27.5 dBm EIRP)
- Use of cable loss associated with the antenna cable.

Limitations in the USA and Canada

Note

Limitation of the radiated power (FCC)

RF600 systems that are put into operation in the USA and Canada must not exceed the following radiated power with an RF620A antenna:

- 4000 mW EIRP (or 36 dBm EIRP)

Make the following settings to ensure that the maximum permitted radiated power of the antenna is not exceeded:

- Conducted power P (dBm) of the RF600 reader: < 30 dBm
- Antenna gain G_i (dBi) in the FCC frequency band: ≤ -5 dBi
- Cable loss a_k (dB): ≥ 1 dB

P (dBm) ≤ 30 dBm - (G_i - 6 dBi) + a_k

Limitations in China

Note

Limitation of the radiated power (CMIIT)

RF600 systems that are put into operation in China must not exceed the following radiated power with an RF620A antenna:

- 2000 mW ERP (or 33 dBm ERP)
  Converted into EIRP: 3250 mW EIRP (or 35 dBm EIRP)

Make the following settings to ensure that the maximum permitted radiated power of the antenna is not exceeded:

- Radiated power: ≤ 2000 mW ERP (or 33 dBm ERP)

  Converted into EIRP: ≤ 3250 mW EIRP (or 35 dBm EIRP)
- Use of cable loss associated with the antenna cable.

Limitations in Japan

Note

Limitation of the radiated power (ARIB)

RF600 systems that are put into operation in Japan must not exceed the following radiated power with an RF620A antenna:

- 500 mW EIRP (or 27 dBm EIRP) for operation with RF650R (ARIB STD-T107)
- 4000 mW EIRP (or 36 dBm EIRP) for operation with RF680R/RF685R (ARIB STD-T106)

The maximum permissible radiated power of the antenna cannot be reached or exceeded due to the negative antenna gain.

6.3.6 Antenna patterns

6.3.6.1 Alignment of transponders to the antenna

Polarization axis

Since the RF620A antenna has linear polarization, it is necessary to consider the alignment of the transponders with regard to the polarization axis of the antenna.

The polarization axes of antenna and transponder must always be parallel. The symbol on the antenna indicates the polarization axis.

Figure 6-13 Polarization axis

Alignment

The following diagram shows the optimum alignment of the RF600 transponders to the RF620A antenna.

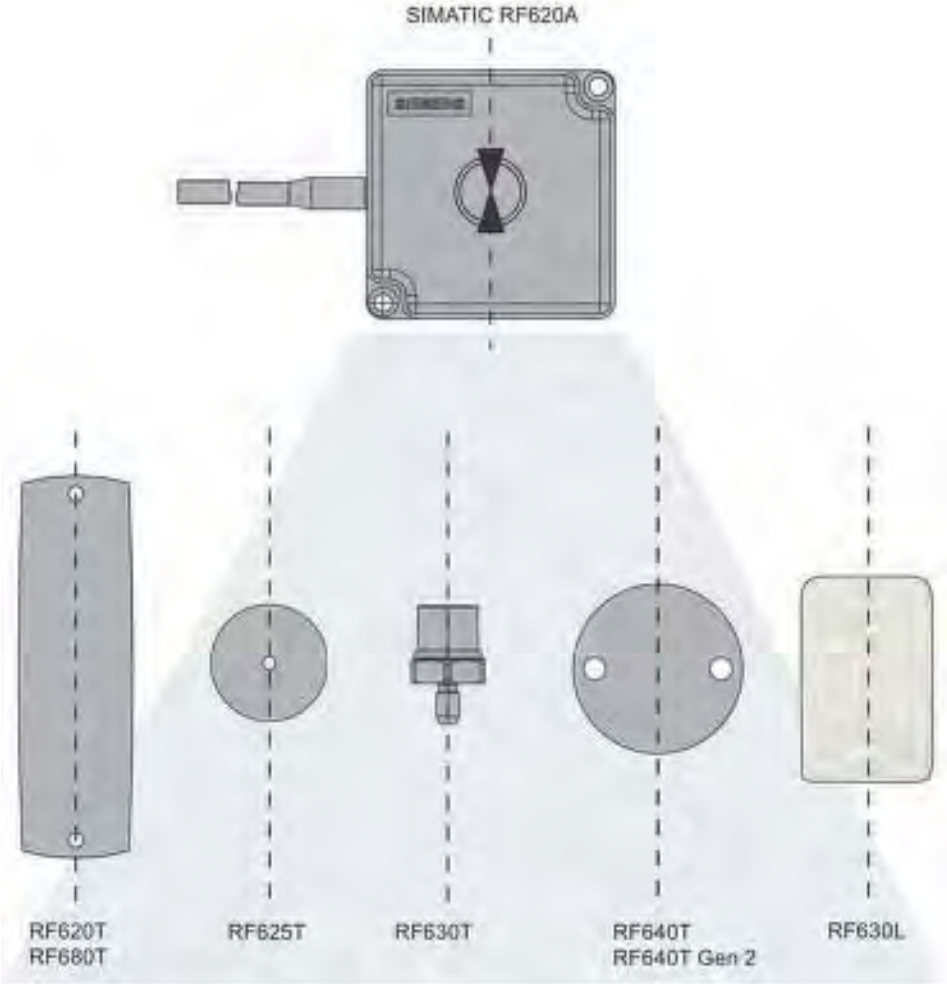

Figure 6-14 Antenna/transponder alignment

Angle deviation diagram for alignment

The following diagram shows the dependence of the following factors:

- Alignment angle of transponder to antenna
- Maximum range of antenna

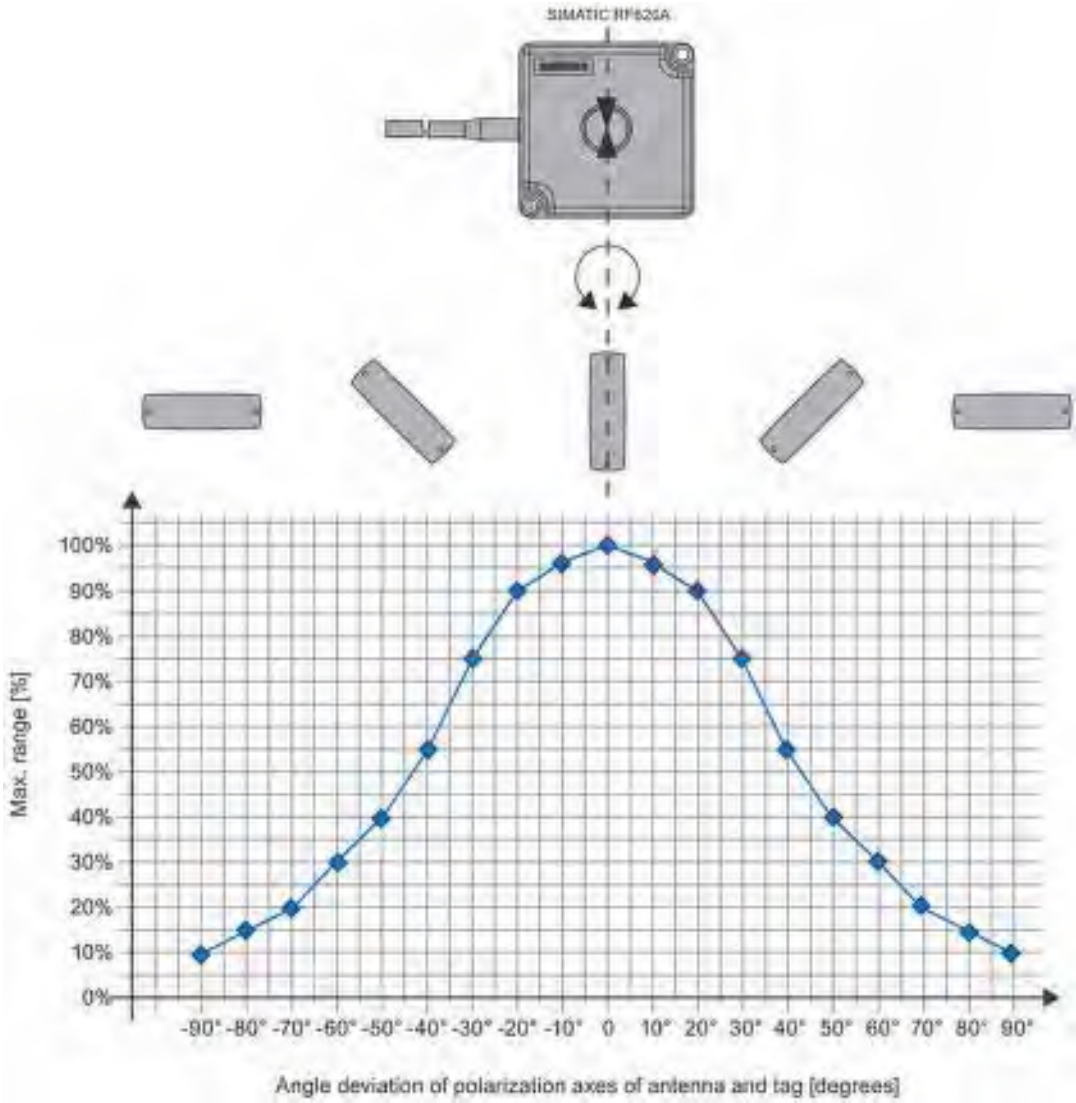

Figure 6-15 Angle deviation diagram for alignment

6.3.6.2 Antenna pattern ETSI

Directional radiation pattern ETSI

The directional radiation pattern is shown for nominal alignment and a center frequency of 866.3 MHz. The nominal antenna alignment is given when the antenna elevation is provided as shown in the following figure.

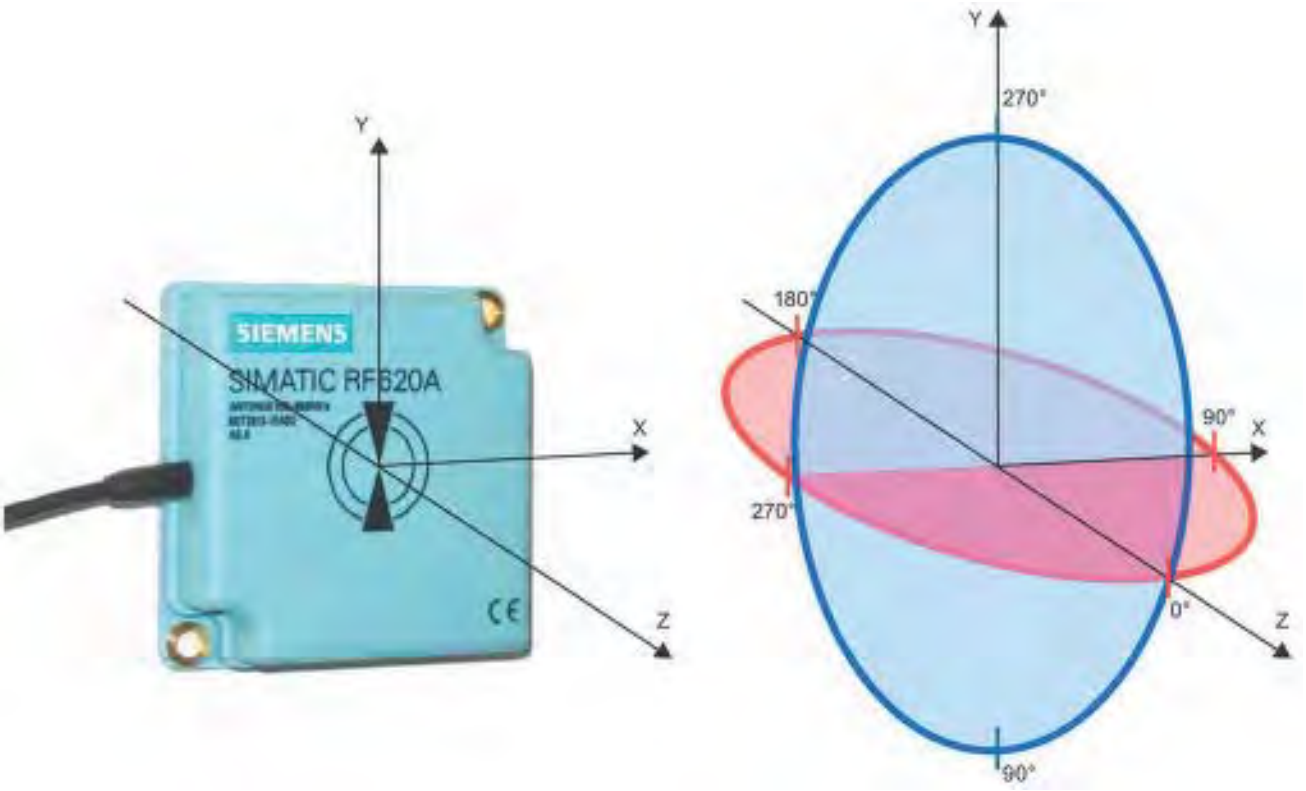

Figure 6-16 Reference system

The half-power beam width of the antenna is defined by the angle between the two -3 dB points. Which range (in %) corresponds to the dB values in the patterns can be obtained from this table .

Note that the measurements presented graphically below were carried out in a low-reflection environment. Deviations can therefore occur in a normally reflecting environment.

Directional radiation pattern ETSI on metallic mounting surface (15 cm x 15 cm)

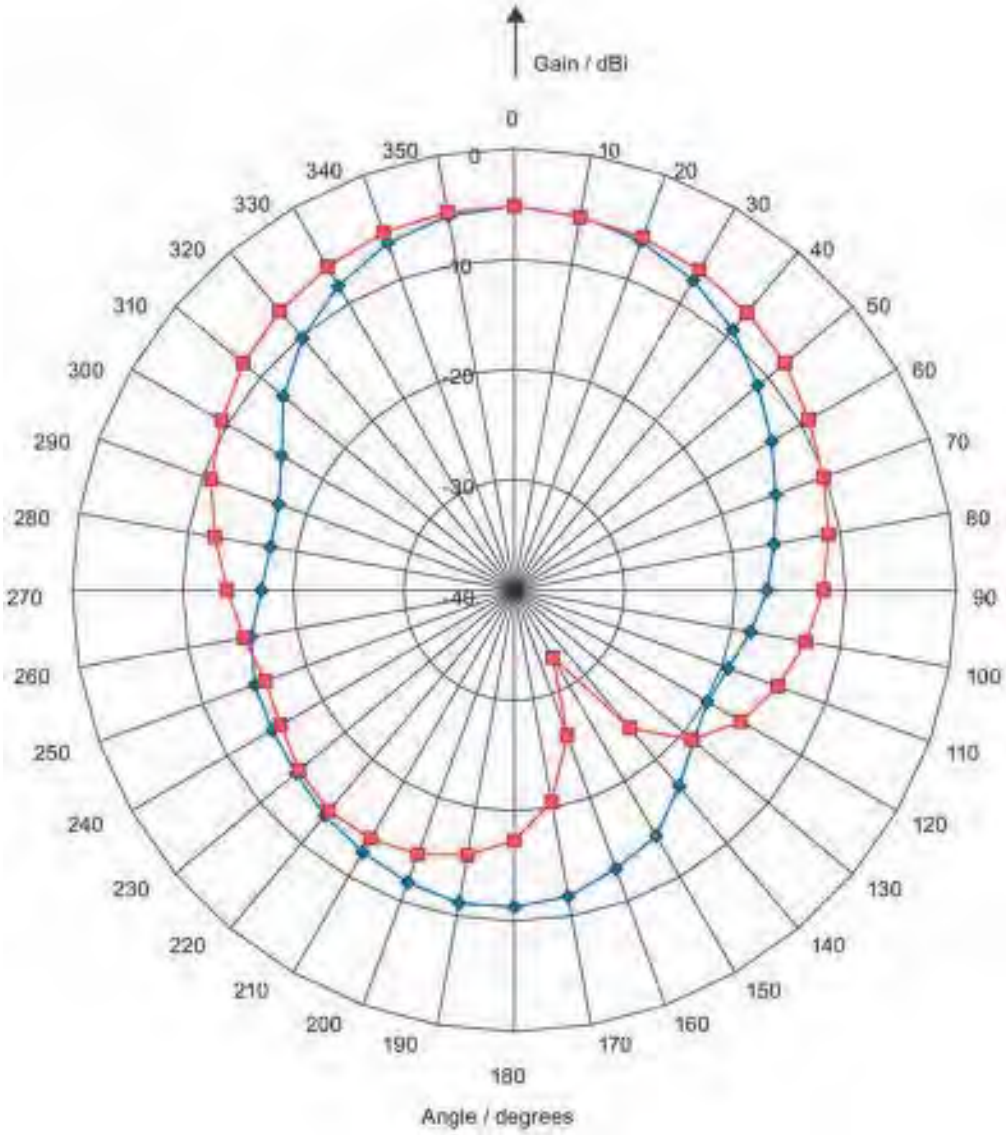

Pattern of the vertical plane of the antenna

Pattern of the horizontal plane of the antenna

Figure 6-17 Directional radiation pattern RF620A ETSI on metallic mounting surface

Directional radiation pattern ETSI on non-metallic mounting surface

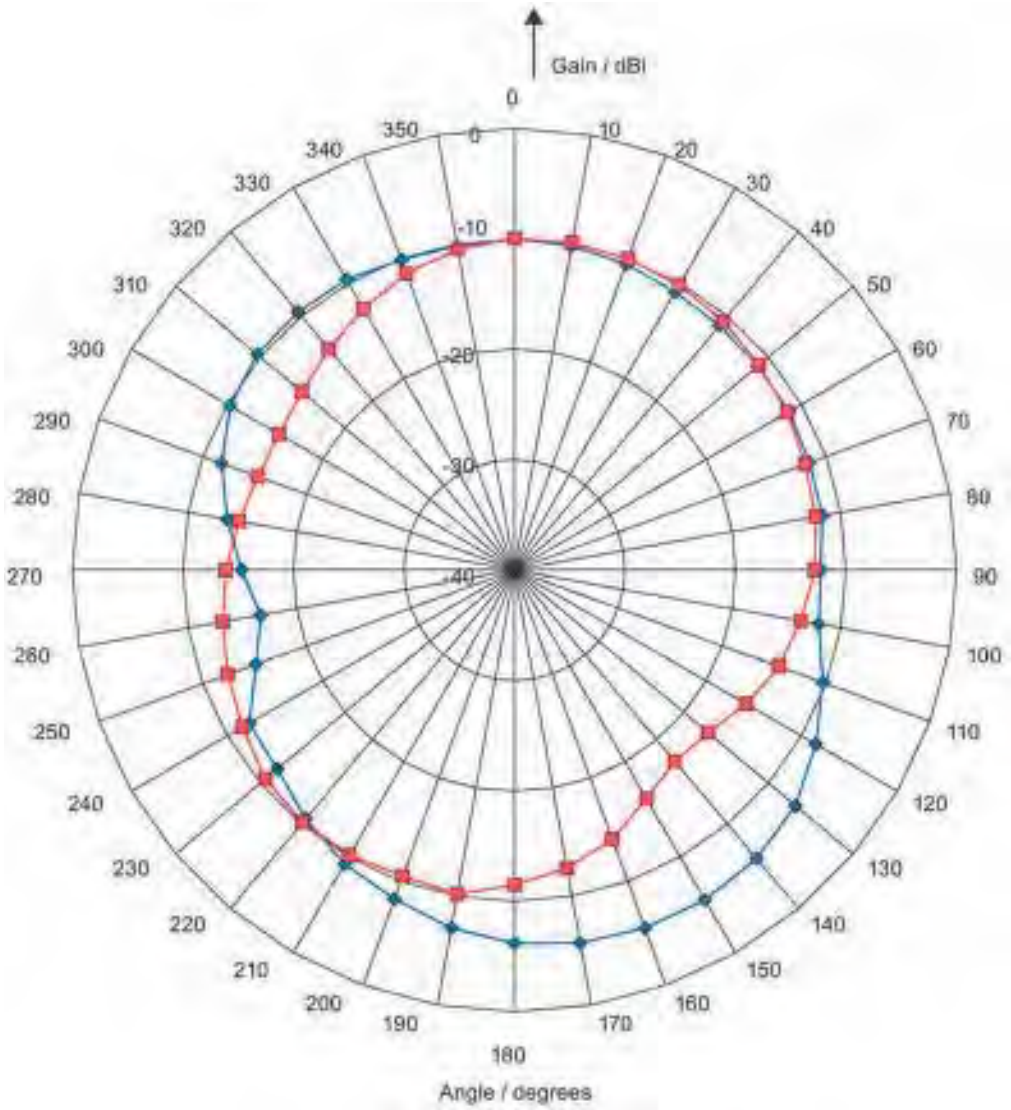

Pattern of the vertical plane of the antenna

Pattern of the horizontal plane of the antenna

Figure 6-18 Directional radiation pattern RF620A ETSI on non-metallic mounting surface

6.3.6.3 Antenna pattern FCC

Directional radiation pattern FCC

The directional radiation pattern is shown for nominal alignment and a center frequency of 915 MHz.

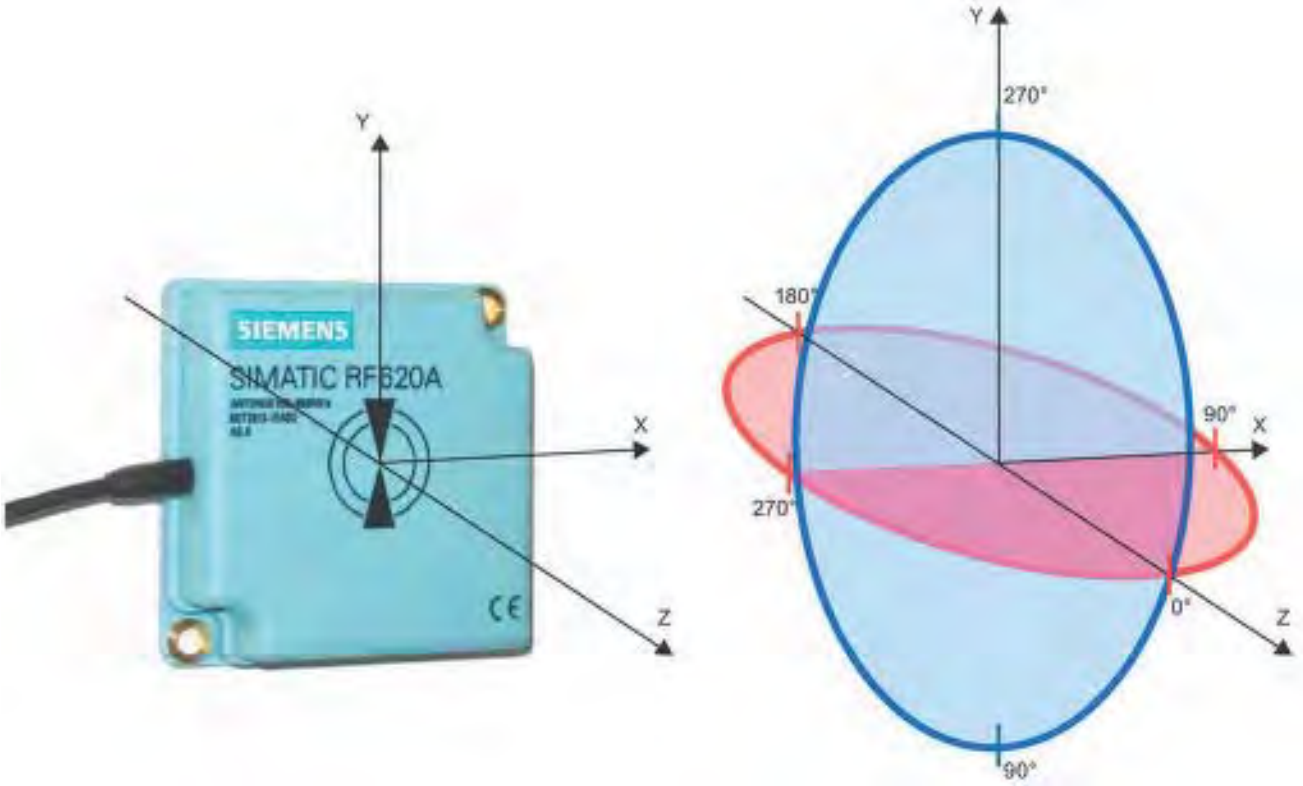

Figure 6-19 Reference system

The half-power beam width of the antenna is defined by the angle between the two -3 dB points (corresponding to half the power in relation to the maximum power). Which range (in %) corresponds to the dB values in the patterns can be obtained from this table .

Note that the measurements presented graphically below were carried out in a low-reflection environment. Low deviations can therefore occur in a normally reflecting environment.

Directional radiation pattern of the RF620A (FCC) on metallic mounting surface (15 cm x 15 cm)

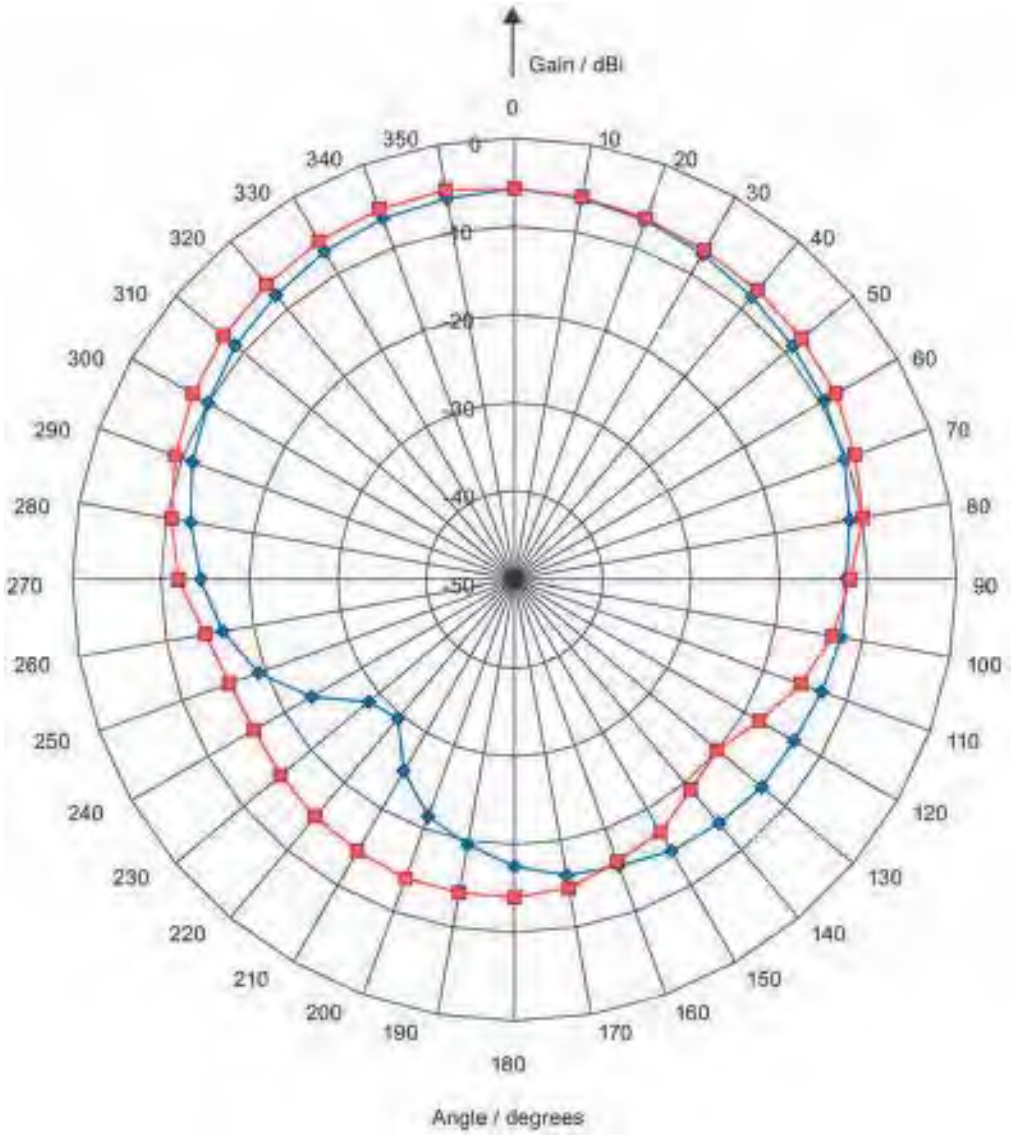

Pattern of the vertical plane of the antenna

Pattern of the horizontal plane of the antenna

Figure 6-20 Directional radiation pattern of the RF620A (FCC) on metallic mounting surface

Directional radiation pattern of the RF620A (FCC) on non-metallic mounting surface

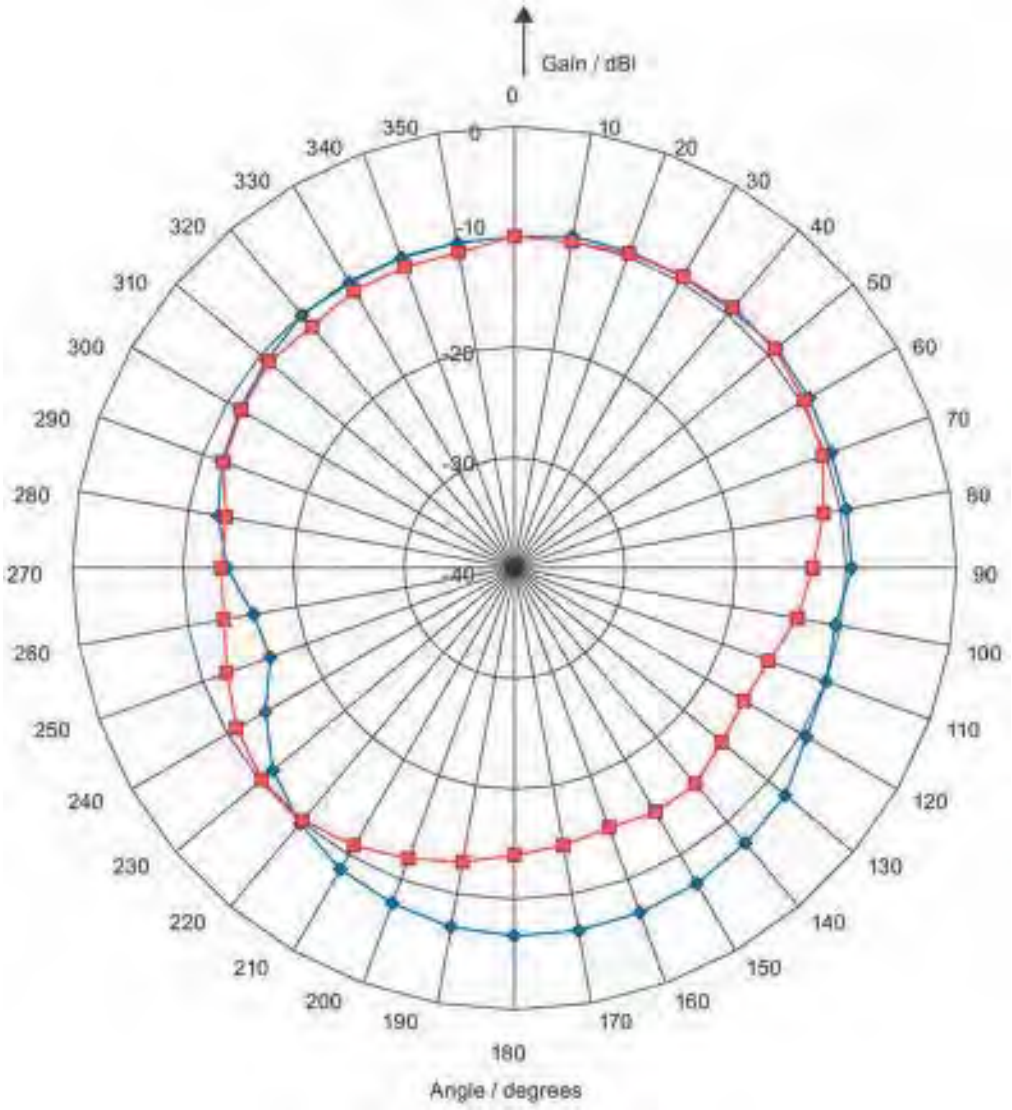

Pattern of the vertical plane of the antenna

Pattern of the horizontal plane of the antenna

Figure 6-21 Directional radiation pattern of the RF620A (FCC) on non-metallic mounting surface

6.3.6.4 Interpretation of directional radiation patterns

The following overview table will help you with the interpretation of directional radiation patterns.

The table shows which dBi values correspond to which read/write ranges (in %): You can read the radiated power depending on the reference angle from the directional radiation patterns, and thus obtain information on the read/write range with this reference angle with regard to a transponder.

The dBr values correspond to the difference between the maximum dBi value and a second dBi value.

Deviation from maximum antenna gain [dBr]	Read/write range [%]
0	100
-3	70
-6	50
-9	35
-12	25
-15	18
-18	13

Example

As can be seen from the Antenna pattern ETSI (Page 260), the maximum antenna gain is -5 dBi. In the vertical plane, the antenna gain has dropped to approx. -11 dBi at +40° and 320°. This means that the dBr value is -6. The antenna range is only 50% of the maximum range at ± 40° from the Z axis within the vertical plane (see line shown in blue in the directional radiation pattern: Characteristic of the vertical plane of the antenna and the associated representation of the reference system).

6.3.7 Technical data

Table 6- 13 Technical specifications for the RF620A antenna

	6GT2812-1EA0x
Product type designation	SIMATIC RF620A
Radio frequencies	
Operating frequency	
• ETSI	• 865 to 868 MHz
• FCC	• 902 to 928 MHz
Maximum radiated power	
• ETSI	• ≤ 340 mW ERP
• FCC	• ≤ 560 mW EIRP
• CMIIT	• ≤ 2000 mW ERP
• ARIB	• STD-T107: RF650R: ≤ 500 mW EIRP • STD-T106: RF680R/RF685R: < 4000 mW EIRP
Antenna gain	-10 dBi ... -5 dBi
• ETSI	• Depends on background, refer to the section "Antenna pattern ETSI (Page 260)"
• FCC	• Depends on background, refer to the section "Antenna pattern FCC (Page 263)"
Opening angle for sending/receiving when mounted on a metal surface of 15 cm x 15 cm [1)]	
• ETSI	• Horizontal plane: 100° Vertical plane: 75° see section "Antenna pattern ETSI (Page 260)"
• FCC	• Horizontal plane: 130 Vertical plane: 105° see section "Antenna pattern FCC (Page 263)"

	6GT2812-1EA0x
Electrical data	
Range	See section "Maximum read/write ranges of transponders (Page 59)"
Impedance	50 Ω
Polarization	Linear
VSWR (standing wave ratio)	≤ 2:1
Power	
• ETSI	• ≤ 2 W
• FCC	• ≤ 1 W
Interfaces	
Plug connection	30 cm coaxial cable with RP-TNC coupling (for connection of the antenna cable)
Mechanical specifications	
Material	PA 12
Color	Pastel turquoise
Tightening torque (at room temperature)	≤ 2 Nm
Permitted ambient conditions	
Ambient temperature	
• During operation	• -20 ... +70 °C
• During transportation and storage	• -40 ... +85 °C
Degree of protection	IP67
Shock resistant to EN 60068-2-27	50 g [2]
Vibrations according to EN 60068-2-6	20 g [2]
Design, dimensions and weight	
Dimensions (H x W x D)	75 x 75 x 20 mm
Weight	100 g
Standards, specifications, approvals	
Proof of suitability	
• ETSI	• CE (ETSI EN 302208)
• FCC	• FCC (Title 47, Part 15.247), cULus
MTBF	1190 years

[1] The values differ for different dimensions/materials of the mounting surface.

[2] The values for shock and vibration are maximum values and must not be applied continuously.

6.3.8 Dimension drawing

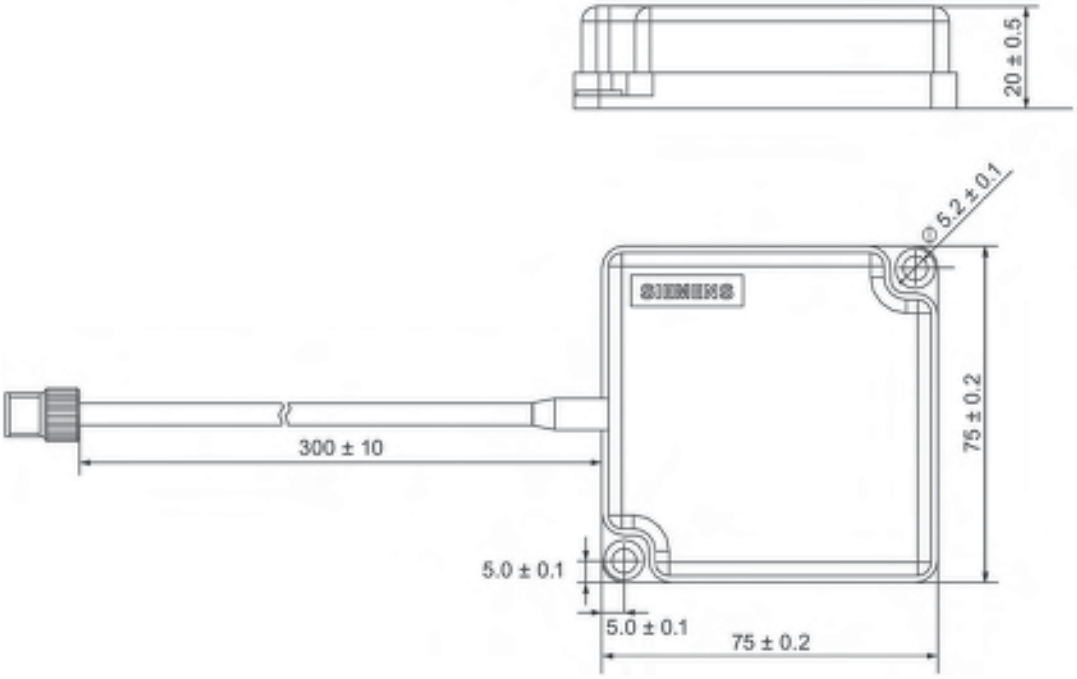

Figure 6-22 Dimension drawing RF620A

All dimensions in mm

6.3.9 Approvals & certificates

Table 6- 14 6GT2812-1EA00

Labeling	Designation
CE	Conformity with the RED directive 2014/53/EU Conformity with the RoHS directive 2011/65/EU

Table 6- 15 6GT2812-1EA01

Labeling	Description
FC Federal Communications Commission	FCC CFR 47, Part 15 sections 15.247 Radio Frequency Interference Statement This equipment has been tested and found to comply with the limits for a Class B digital device, pursuant to Part 15 of the FCC Rules. The FCC approval is granted in association with the FCC approval of the following RF600 readers: • FCC ID: NXW-RF600R2 (for RF650R: 6GT2811-6AB20-1AA0, RF680R: 6GT2811-6AA10-1AA0, RF685R: 6GT2811-6CA10-1AA0)
Industry Canada Radio Standards Specifications	RSS-210 Issue 7, June 2007, Sections 2.2, A8 The approval for Industry Canada is granted in association with the Industry Canada approval of the following RF600 readers: • IC: 267X-RF600R2, Model RF650R (for 6GT2811-6AB20-1AA0) • IC: 267X-RF600R2, Model RF680R (for 6GT2811-6AA10-1AA0) • IC: 267X-RF600R2, Model RF685R (for 6GT2811-6CA10-1AA0)
UL C US	This product is UL-certified for the USA and Canada. It meets the following safety standard(s): • UL Report E205089 • UL 60950-1 - Information Technology Equipment Safety - Part 1: General Requirements • CSA C22.2 No. 60950-1 - Safety of Information Technology Equipment

6.4 SIMATIC RF640A

6.4.1 Characteristics

SIMATIC RF640A	Characteristics	
	Area of application	The SIMATIC RF640A is a universal UHF antenna in a medium size with medium range for industrial applications in production and logistics.
	Frequency range	865 to 928 MHz
	Read range	Max. 6 m
	Polarization	Circular
	Degree of protection	IP65
	Mounting	4 x M4 (VESA 100 fixing system)
	Connector	30 cm connecting cable (connected permanently to the antenna) and RP-TNC coupling An antenna cable is required for connection to the reader (e.g. 6GT2815-0BH30).

Frequency ranges

The antenna is a broadband antenna and covers the frequency ranges from 865 to 928 MHz.

Function

The SIMATIC RF640A is used for transmitting and receiving data in the UHF range. The antennas are connected to the SIMATIC RF600 readers via antenna cables that are available in different lengths.

6.4.2 Ordering data

Table 6- 16 Ordering data RF640A

Product	Article number
SIMATIC RF640A	6GT2812-0GA08

Table 6- 17 Ordering data accessories

Product		Article number
Connecting cable between reader and antenna	1 m (cable loss 0.5 dB)	6GT2815-0BH10
	3 m (cable loss 1.0 dB)	6GT2815-0BH30
	5 m, suitable for drag chains (cable loss 1.5 dB)	6GT2815-2BH50
	10 m (cable loss 2.0 dB)	6GT2815-1BN10
	10 m (cable loss 4.0 dB)	6GT2815-0BN10
	15 m, suitable for drag chains (cable loss 4.0 dB)	6GT2815-2BN15
	20 m (cable loss 4.0 dB)	6GT2815-0BN20
	40 m (cable loss 5.0 dB)	6GT2815-0BN40
SIMATIC antenna holder for RF600 devices		6GT2890-2AB10
Antenna mounting kit		6GT2890-0AA00

6.4.3 Installation

Mounting system

A standardized VESA 100 mounting system is provided to mount the antenna. The mounting system consists of four fixing holes for M4 screws at intervals of 100 mm. The antenna is suitable for mounting on metallic and non-metallic surfaces.

Note

Achieving optimum wave propagation

To achieve optimum wave propagation, the antenna should not be surrounded by conducting objects. The area between antenna and transponder should also allow wave propagation without interference.

Antenna holders

The Siemens antenna holders allow for fine adjustment of the antenna field by setting the solid angle.

6.4.4 Connecting the antenna

The SIMATIC RF640A antenna must be connected to the reader using an antenna cable.

Preassembled standard cables in lengths of 1 m, 3 m, 5 m, 10 m, 15 m, 20 m and 40 m are available to connect the antenna.

The range of the antenna is limited by the cable loss. The maximum range can be achieved with the cable 6GT2815-0BH10 (length 1 m), since this cable has the lowest cable loss.

Requirement

Note

Use of Siemens antenna cable

To ensure optimum functioning of the antenna, it is recommended that a Siemens antenna cable is used in accordance with the list of accessories.

Strain relief

To protect the antenna connecting cable from strain, you can attach strain relief, e.g. in the form of a strain relief clamp. The following graphic shows the optimum mounting point for attaching strain relief.

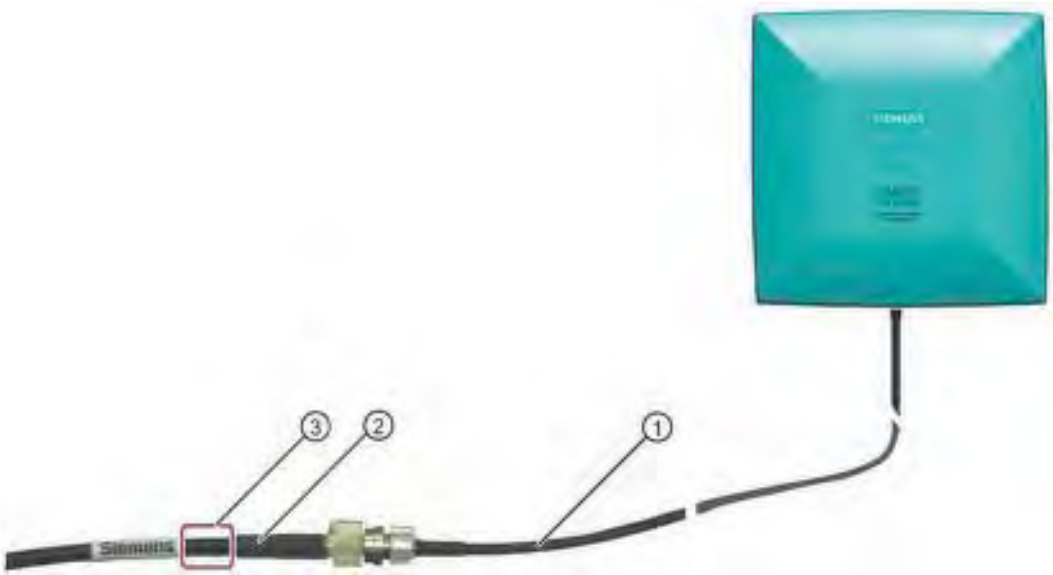

① RF640A antenna connecting cable
② RF600 antenna cable
③ Mounting point for strain relief

Figure 6-23 Strain relief

6.4.4.1 Bending radii and bending cycles of the cable

The following listed bending radii are minimum values, which may not be fallen below and are based on repeated bending.

Table 6- 18 Bending radii of the antenna cable

Cable designa-tion	Article number	Length [m]	Cable loss [dB]	Bending radius [mm]
Antenna cable	6GT2815-0BH10	1	0.5	51
Antenna cable	6GT2815-0BH30	3	1	51
Antenna cable (suitable for drag chains)	6GT2815-2BH50	5	1.5	45 [1) 2)]
Antenna cable	6GT2815-1BN10	10	2	77
Antenna cable	6GT2815-0BN10	10	4	51
Antenna cable (suitable for drag chains)	6GT2815-2BN15	15	4	45 [1) 2)]
Antenna cable	6GT2815-0BN20	20	4	77
Antenna cable	6GT2815-0BN40	40	5	77

1) Permissible minimum bending radius with one-time bending. 28 mm

2) With cables capable of being used in drag chains, 100,000 bending cycles at a bending radius of 100 mm and a bend of ± 180° or 3 million torsion cycles with a bend of ± 180° on a cable length of 1 m are permitted.

6.4.5 Antenna parameter assignment

6.4.5.1 Setting RF640A parameters for RF650R

Depending on the country or region in which the antenna is being operated, it is subject to regional limitations with respect to the radiated power.

Limitations in the EU, EFTA, or Turkey

Note

Limitation of the radiated power according to EN 302 208 V1.4.1 (ETSI)

RF600 systems that are put into operation in the EU, EFTA or Turkey must not exceed the following radiated power with an RF640A antenna:

- 2000 mW ERP (or 33 dBm ERP)
  Converted into EIRP: 3250 mW EIRP (or 35 dBm EIRP)

Make the following settings to ensure that the maximum permitted radiated power of the antenna is not exceeded:

- Antenna gain: 4 dBi (or 7 dBiC)
- Radiated power: ≤ 1360 mW ERP (or 31.35 dBm ERP)

  Converted into EIRP: ≤ 2240 mW EIRP (or 33.5 dBm EIRP)
- Use of cable loss associated with the antenna cable.

Limitations in the USA and Canada

Note

Limitation of the radiated power (FCC)

RF600 systems that are put into operation in the USA and Canada must not exceed the following radiated power with an RF640A antenna:

- 4000 mW EIRP (or 36 dBm EIRP)

Make the following settings to ensure that the maximum permitted radiated power of the antenna is not exceeded:

- Conducted power P (dBm) of the RF600 reader: < 30 dBm
- Antenna gain G_i (dBi) in the FCC frequency band: ≤ 4.3 dBi
- Cable loss a_k (dB): ≥ 1 dB

$P\ (dBm) \leq 30\ dBm - (G_i - 6\ dBi) + a_k$

Limitations in China

Note

Limitation of the radiated power (CMIIT)

RF600 systems that are put into operation in China must not exceed the following radiated power with an RF640A antenna:

- 1460 mW ERP (or 31.35 dBm ERP)

  Converted into EIRP: 2400 mW EIRP (or 33.8 dBm EIRP)

Make the following settings to ensure that the maximum permitted radiated power of the antenna is not exceeded:

- Antenna gain: 4.3 dBi (or 7.3 dBiC)
- Radiated power: ≤ 2000 mW ERP (or 33 dBm ERP)

  Converted into EIRP: ≤ 3250 mW EIRP (or 35 dBm EIRP)
- Use of cable loss associated with the antenna cable.

Limitations in Japan

Note

Limitation of the radiated power (ARIB STD-T107)

RF600 systems that are put into operation in Japan must not exceed the following radiated power with an RF640A antenna:

- 500 mW EIRP (or 27 dBm EIRP)

6.4.5.2 Setting RF640A parameters for RF680R/RF685R

Depending on the country or region in which the antenna is being operated, it is subject to regional limitations with respect to the radiated power.

Limitations in the EU, EFTA, or Turkey

Note

Limitation of the radiated power according to EN 302 208 V1.4.1 (ETSI)

RF600 systems that are put into operation in the EU, EFTA or Turkey must not exceed the following radiated power with an RF640A antenna:

- 2000 mW ERP (or 33 dBm ERP)

  Converted into EIRP: 3250 mW EIRP (or 35 dBm EIRP)

Make the following settings to ensure that the maximum permitted radiated power of the antenna is not exceeded:

- Antenna gain: 4 dBi (or 7 dBiC)
- Radiated power: ≤ 2000 mW ERP (or 33 dBm ERP)

  Converted into EIRP: ≤ 3250 mW EIRP (or 35 dBm EIRP)
- Use of cable loss associated with the antenna cable.

Limitations in the USA and Canada

Note

Limitation of the radiated power (FCC)

RF600 systems that are put into operation in the USA and Canada must not exceed the following radiated power with an RF640A antenna:

- 4000 mW EIRP (or 36 dBm EIRP)

Make the following settings to ensure that the maximum permitted radiated power of the antenna is not exceeded:

- Conducted power P (dBm) of the RF600 reader: < 30 dBm
- Antenna gain G_i (dBi) in the FCC frequency band: ≤ 4.3 dBi
- Cable loss a_k (dB): ≥ 1 dB

$P\ (dBm) \leq 30\ dBm - (G_i - 6\ dBi) + a_k$

Limitations in China

Note

Limitation of the radiated power (CMIIT)

RF600 systems that are put into operation in China must not exceed the following radiated power with an RF640A antenna:

- 2000 mW ERP (or 33 dBm ERP)

  Converted into EIRP: 3250 mW EIRP (or 35 dBm EIRP)

Make the following settings to ensure that the maximum permitted radiated power of the antenna is not exceeded:

- Antenna gain: 4.3 dBi (or 7.3 dBiC)
- Radiated power: ≤ 2000 mW ERP (or 33 dBm ERP)

  Converted into EIRP: ≤ 3250 mW EIRP (or 35 dBm EIRP)
- Use of cable loss associated with the antenna cable.

Limitations in Japan

Note

Limitation of the radiated power (ARIB STD-T106)

RF600 systems that are put into operation in Japan must not exceed the following radiated power with an RF640A antenna:

- 4000 mW EIRP (or 36 dBm EIRP)

6.4.6 Antenna patterns

6.4.6.1 Antenna radiation patterns in the ETSI frequency band

Directional radiation pattern ETSI

The directional radiation pattern is shown for nominal alignment and a center frequency of 866.3 MHz. The nominal antenna alignment is given when the antenna elevation is provided as shown in the following figure.

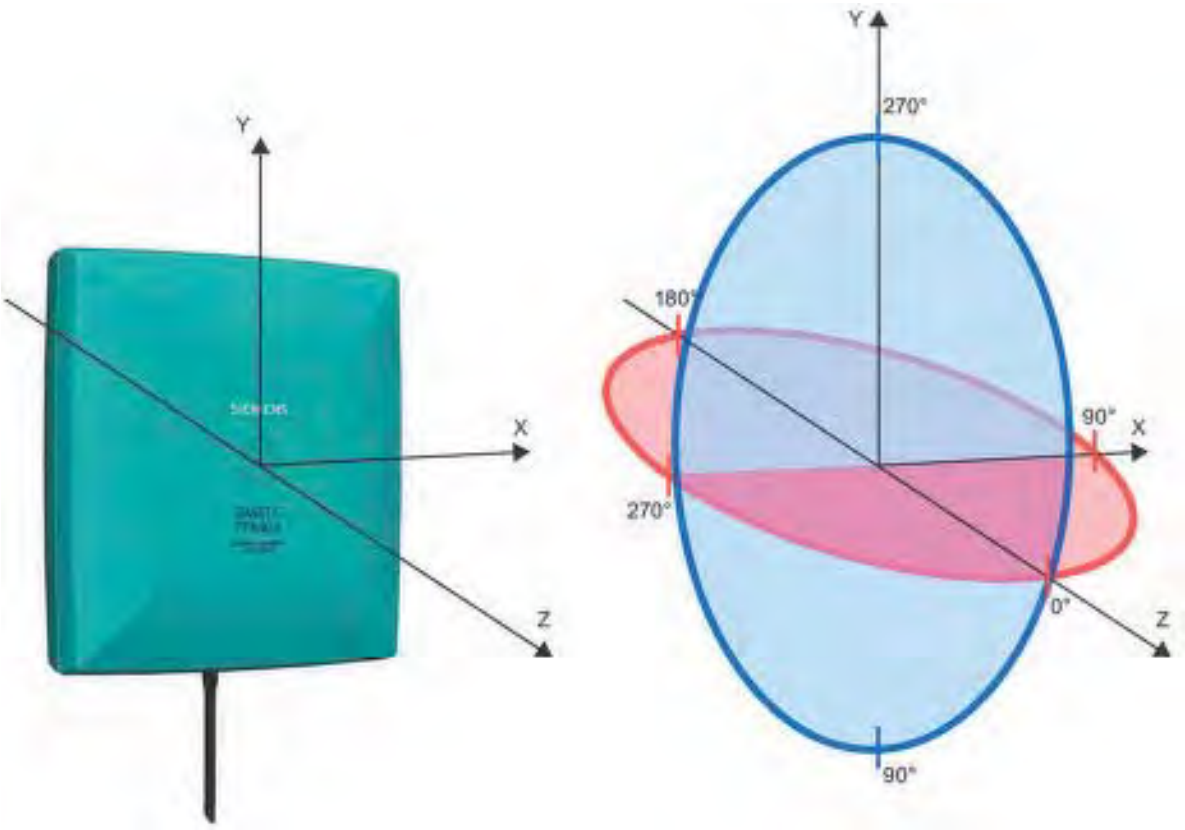

Figure 6-24 Reference system

The half-power beam width of the antenna is defined by the angle between the two -3 dB points. The range (in %) corresponding to the dB values in the patterns can be obtained from this table (Page 288).

Note that the measurements presented graphically below were carried out in a low-reflection environment. Deviations can therefore occur in a normally reflecting environment.

Directional radiation patterns in the ETSI frequency band

Polarization axis and axis of symmetry are parallel

In a configuration based on the following directional radiation pattern of the antenna, the axis of symmetry of the antenna and the polarization axis of the transponder are parallel.

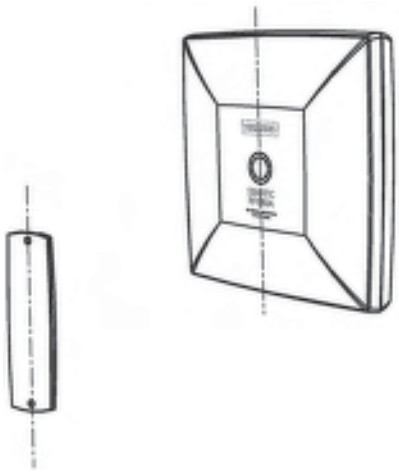

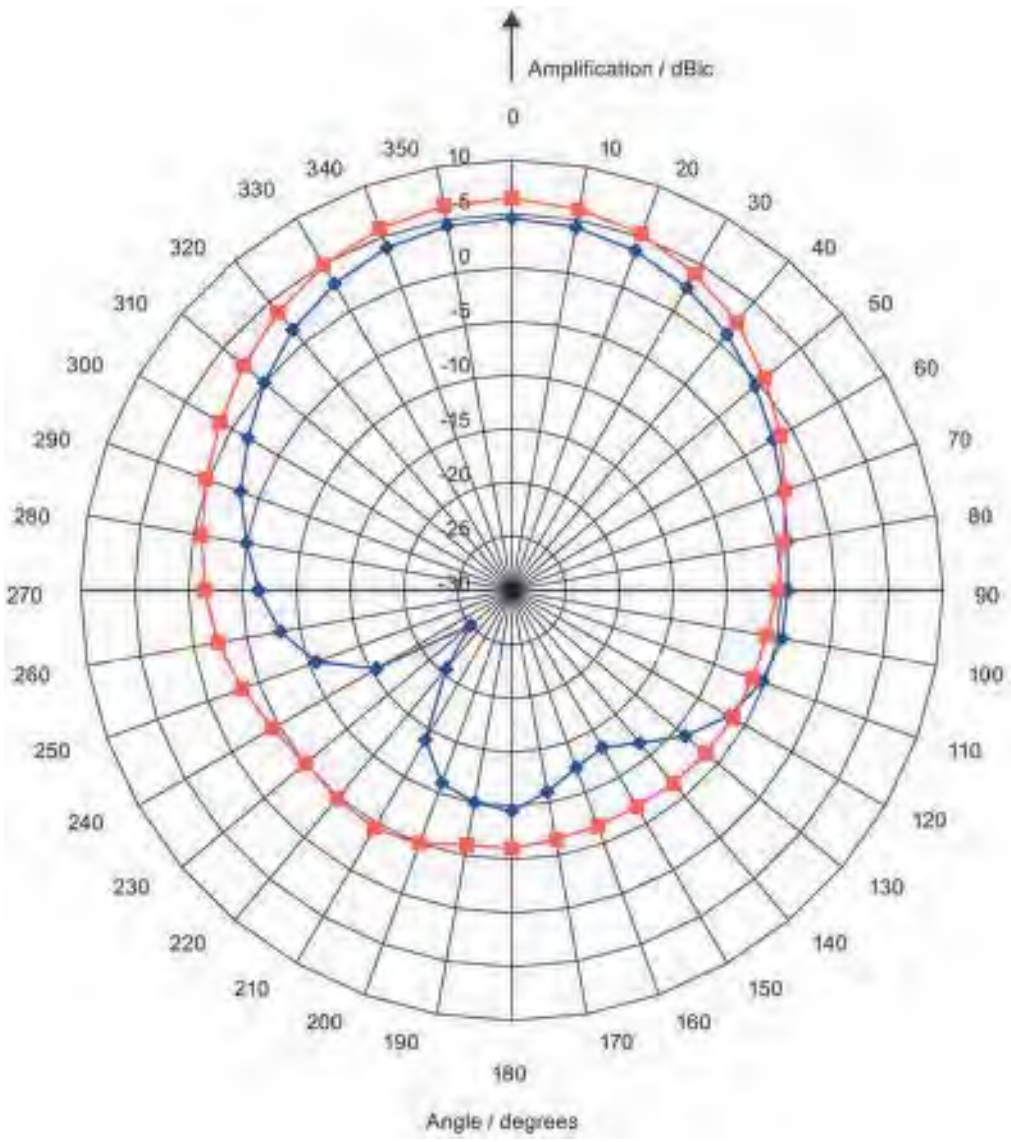

Pattern of the vertical plane of the antenna

Pattern of the horizontal plane of the antenna

Figure 6-25 The RF640A directional radiation pattern in the ETSI frequency band, polarization axis of the transponder, and axis of symmetry of the antenna are parallel to each other.

Polarization axis and axis of symmetry are orthogonal to each other

In a configuration based on the following directional radiation pattern of the antenna, the axis of symmetry of the antenna and the polarization axis of the transponder are orthogonal to each other.

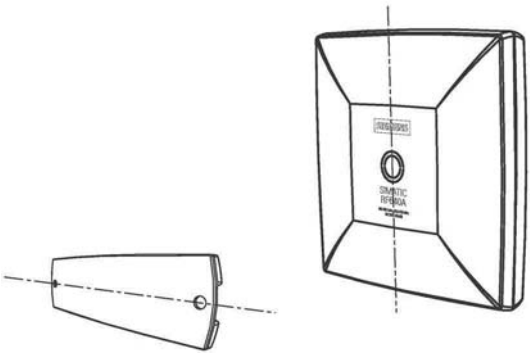

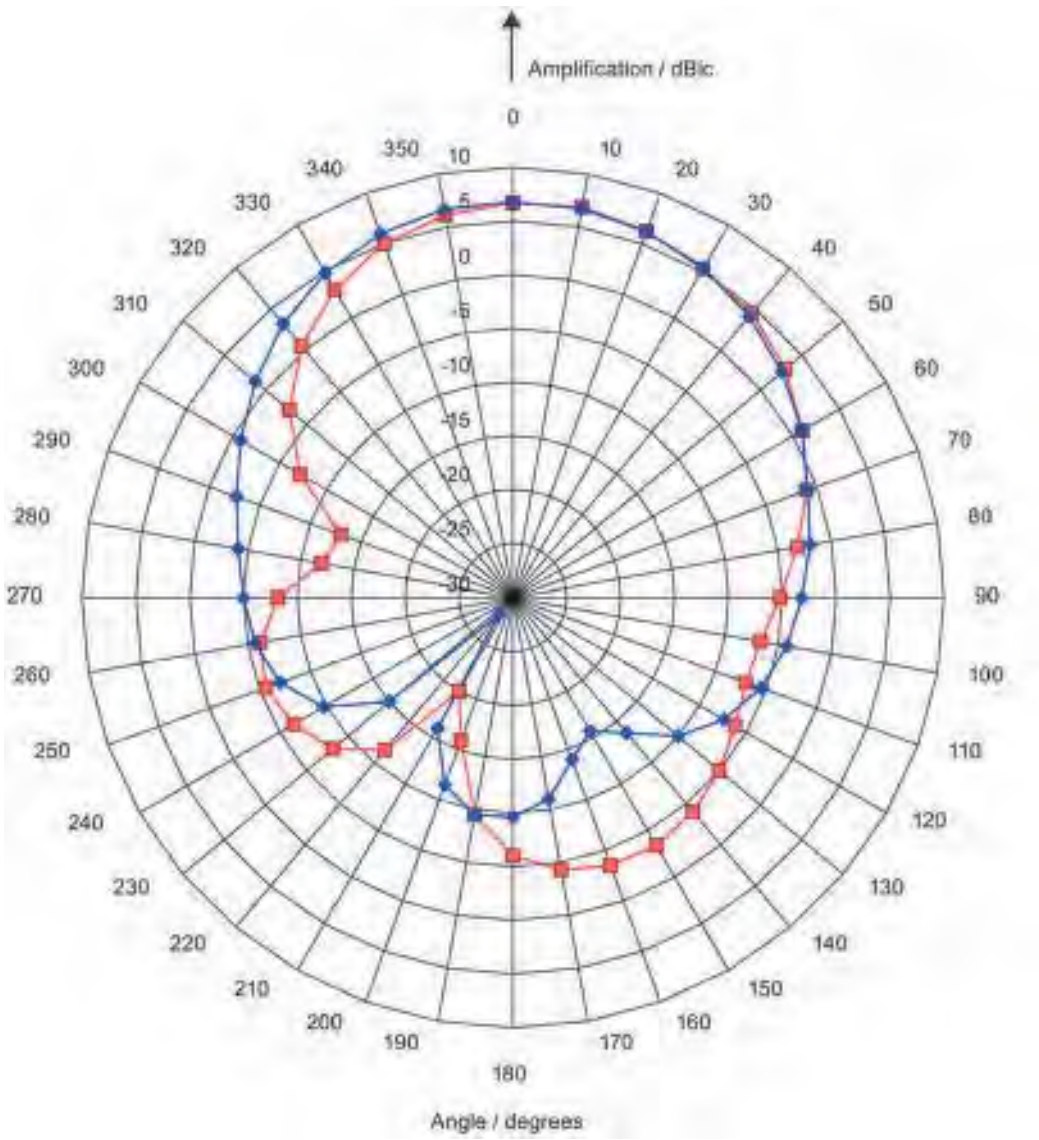

Pattern of the vertical plane of the antenna

Pattern of the horizontal plane of the antenna

Figure 6-26 The RF640A directional radiation pattern in the ETSI frequency band, axis of symmetry of the antenna, and polarization axis of the transponder are orthogonal to each other

6.4.6.2 Antenna radiation patterns in the FCC frequency band

Directional radiation pattern USA (FCC)

The directional radiation pattern is shown for nominal alignment and a center frequency of 915 MHz.

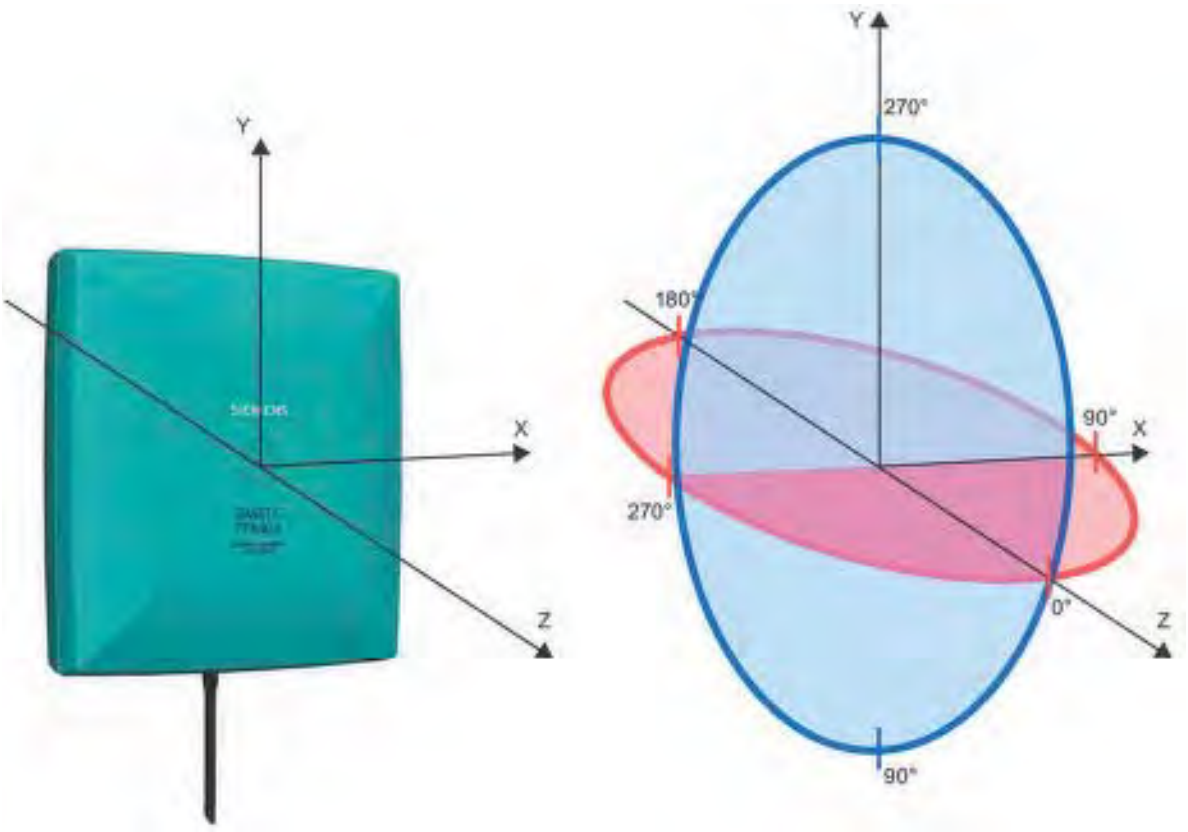

Figure 6-27 Reference system

The half-power beam width of the antenna is defined by the angle between the two -3 dB points (corresponding to half the power referred to the maximum power). Which range (in %) corresponds to the dB values in the patterns can be obtained from this table (Page 288).

Note that the measurements presented graphically below were carried out in a low-reflection environment. Deviations can therefore occur in a normally reflecting environment.

Directional radiation pattern in the FCC frequency band

Polarization axis and axis of symmetry are parallel

In the following directional radiation pattern of the antenna, the axis of symmetry of the antenna and the polarization axis of the transponder are parallel.

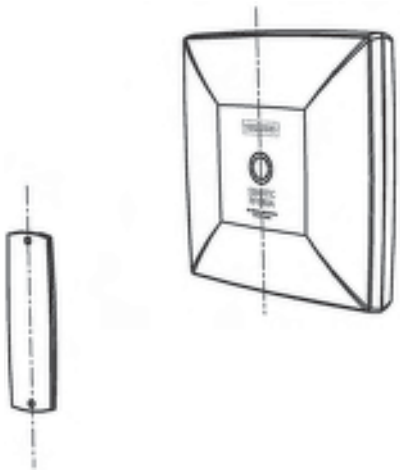

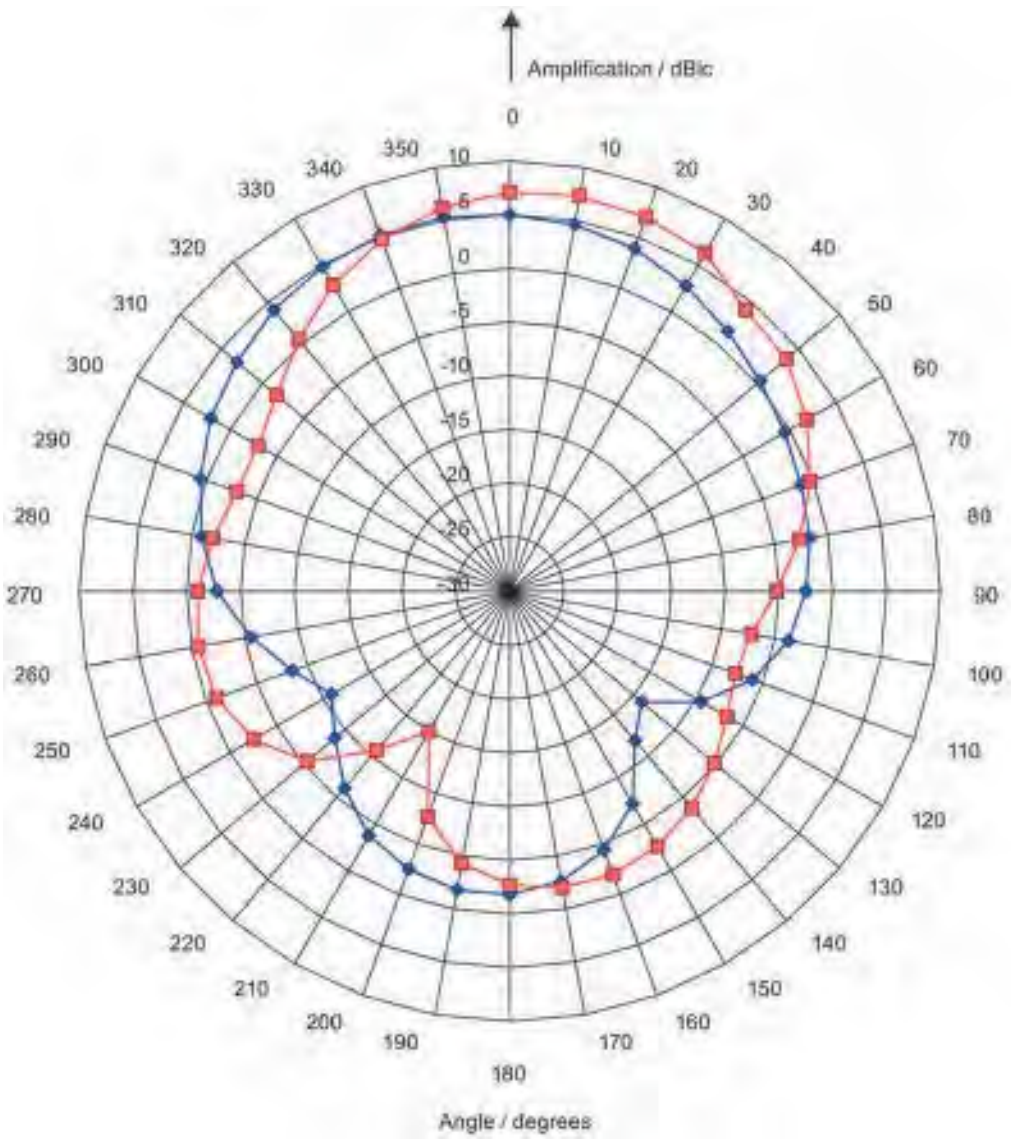

Pattern of the vertical plane of the antenna

Pattern of the horizontal plane of the antenna

Figure 6-28 The RF640A directional radiation pattern in the FCC frequency band, polarization axis of the transponder, and axis of symmetry of the antenna are parallel to each other

Polarization axis and axis of symmetry are orthogonal to each other

In the following directional radiation pattern of the antenna, the axis of symmetry of the antenna and the polarization axis of the transponder are orthogonal to each other.

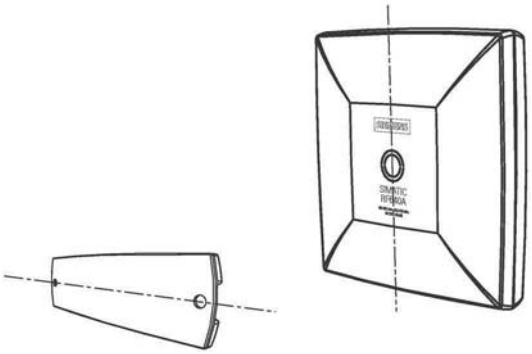

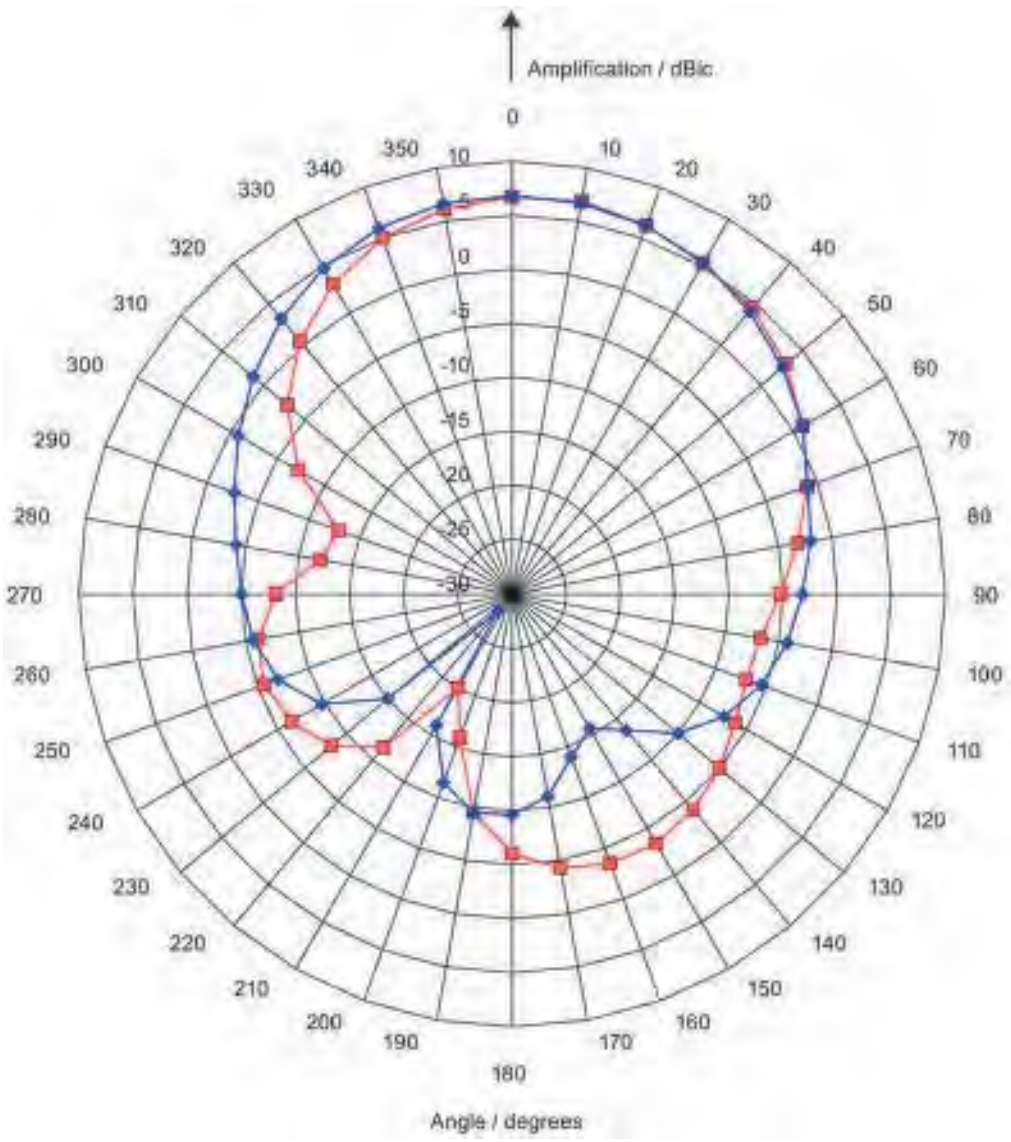

Pattern of the vertical plane of the antenna

Pattern of the horizontal plane of the antenna

Figure 6-29 The RF640A directional radiation pattern in the FCC frequency band, axis of symmetry of the antenna, and polarization axis of the transponder are orthogonal to each other

6.4.6.3 Interpretation of directional radiation patterns

The following overview table will help you with the interpretation of directional radiation patterns.

The table shows which dBi values correspond to which read/write ranges (in %): You can read the radiated power depending on the reference angle from the directional radiation patterns, and thus obtain information on the read/write range with this reference angle with regard to a transponder.

The dBr values correspond to the difference between the maximum dBi/dBic value and a second dBi/dBic value.

Deviation from maximum antenna gain [dBr]	Read/write range [%]
0	100
-3	70
-6	50
-9	35
-12	25
-15	18
-18	13

Example

As can be seen in Directional radiation patterns in the ETSI frequency band (Page 279), the maximum antenna gain in the vertical plane is 3.45 dBi (6.45 dBic). In this plane, and with the polarization axis of the transponder parallel to the axis of symmetry of the antenna, the antenna gain drops to about 0.5 dBic at +50° or 310°. Therefore the dBr value is -6. The antenna range is only 50% of the maximum range at + 50° or 310° from the Z axis within the vertical plane (see values shown in blue in the directional radiation pattern: Characteristic of the vertical plane of the antenna (Page 279) and the associated representation of the reference system (Page 278)).

6.4.7 Technical data

Table 6- 19 Technical specifications for the RF640A antenna

	6GT2812-0GA08
Product type designation	SIMATIC RF640A
Radio frequencies	
Operating frequency	865 to 928 MHz
Maximum radiated power	
• ETSI	• RF650R: ≤ 1360 mW ERP RF680R/RF685R: ≤ 2000 mW ERP
• FCC	• RF650R: ≤ 2400 mW EIRP RF680R/RF685R: ≤ 4000 mW EIRP
• CMIIT	• RF650R: ≤ 1300 mW ERP RF680R/RF685R: ≤ 2000 mW ERP
• ARIB	• STD-T107: RF650R: ≤ 500 mW EIRP • STD-T106: RF680R/RF685R: < 4000 mW EIRP
Antenna gain	
• ETSI	• 4 dBi (7 dBic)
• FCC	• 4.3 dBi (7.3 dBic)
Opening angle for sending/receiving when mounted on a metal surface of 15 cm x 15 cm [1)]	
• ETSI	• Horizontal plane: 80° Vertical plane: 75° see section "Directional radiation patterns in the ETSI frequency band (Page 279)"
• FCC	• Horizontal plane: 75° Vertical plane: 85° see section "Directional radiation pattern in the FCC frequency band (Page 284)"
Front-to-back ratio	
• ETSI	• 14 dB ± 2.4 dB (depends on orientation of the transponder)
• FCC	• 9 dB ± 2.7 dB (depends on orientation of the transponder)

	6GT2812-0GA08
Electrical data	
Range	See section "Maximum read/write ranges of transponders (Page 59)"
Impedance	50 Ω
Polarization	Circular
VSWR (standing wave ratio)	
• ETSI	• ≤ 1.25
• FCC	• ≤ 1.6
Power	2 W
Interfaces	
Plug connection	30 cm coaxial cable with RP-TNC coupling (for connection of the antenna cable)
Mechanical specifications	
Material	PA 12
Color	Pastel turquoise
Tightening torque (at room temperature)	≤ 2 Nm
Permitted ambient conditions	
Ambient temperature	
• During operation	-25 ... +75 °C
• During transportation and storage	-40 ... +85 °C
Degree of protection	IP65
Shock resistant to EN 60068-2-27	25.5 g [2]
Vibrations according to EN 60068-2-6	1g [2]
Design, dimensions and weight	
Dimensions (H x W x D)	185 x 185 x 45 mm
Weight	600 g
Standards, specifications, approvals	
Proof of suitability	CE (according to RED), FCC (Title 47, Part 15.247), cULus
MTBF	445 years

[1] The values differ for different dimensions/materials of the mounting surface.

[2] The values for shock and vibration are maximum values and must not be applied continuously.

6.4.8 Dimension drawing

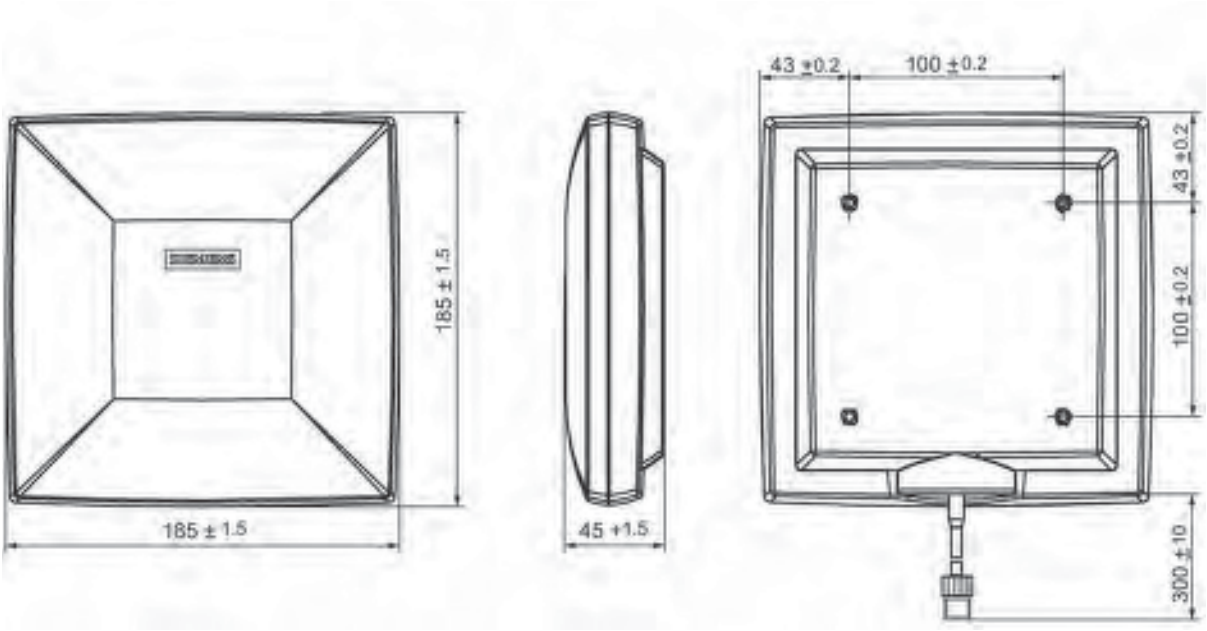

Figure 6-30 Dimension drawing RF640A

All dimensions in mm

6.4.9 Approvals & certificates

Table 6- 20 6GT2812-0GA08

Labeling	Description
CE	Conformity with the RED directive 2014/53/EU Conformity with the RoHS directive 2011/65/EU

Table 6- 21 6GT2812-0GA08

Labeling	Description
FC Federal Communications Commission	FCC CFR 47, Part 15 sections 15.247 Radio Frequency Interference Statement This equipment has been tested and found to comply with the limits for a Class B digital device, pursuant to Part 15 of the FCC Rules. The FCC approval is granted in association with the FCC approval of the following RF600 readers: • FCC ID: NXW-RF600R2 (for RF650R: 6GT2811-6AB20-1AA0, RF680R: 6GT2811-6AA10-1AA0, RF685R: 6GT2811-6CA10-1AA0)
Industry Canada Radio Standards Specifications	RSS-210 Issue 7, June 2007, Sections 2.2, A8 The approval for Industry Canada is granted in association with the Industry Canada approval of the following RF600 readers: • IC: 267X-RF600R2, Model RF650R (for 6GT2811-6AB20-1AA0) • IC: 267X-RF600R2, Model RF680R (for 6GT2811-6AA10-1AA0) • IC: 267X-RF600R2, Model RF685R (for 6GT2811-6CA10-1AA0)
UL C US	This product is UL-certified for the USA and Canada. It meets the following safety standard(s): • UL 60950-1 - Information Technology Equipment Safety - Part 1: General Requirements • CSA C22.2 No. 60950 -1 - Safety of Information Technology Equipment • UL Report E 205089

6.5 SIMATIC RF642A

6.5.1 Characteristics

SIMATIC RF642A	Characteristics	
	Area of application	The SIMATIC RF642A is a universal UHF antenna in a medium size with high range for industrial applications in production and logistics.
	Frequency range	865 to 928 MHz
	Read range	Max. 8 m
	Polarization	Linear
	Degree of protection	IP65
	Mounting	4 x M4 (VESA 100 fixing system)
	Connector	30 cm connecting cable (connected permanently to the antenna) and RP-TNC coupling An antenna cable is required for connection to the reader (e.g. 6GT2815-0BH30).

Frequency ranges

The antenna is a broadband antenna and covers the frequency ranges from 865 to 928 MHz.

Function

The SIMATIC RF642A is used for transmitting and receiving data in the UHF range. The antennas are connected to the SIMATIC RF600 readers via antenna cables that are available in different lengths.

6.5.2 Ordering data

Table 6- 22 Ordering data RF642A

Product	Article number
SIMATIC RF642A	6GT2812-1GA08

Table 6- 23 Ordering data accessories

Product		Article number
Connecting cable between reader and antenna	1 m (cable loss 0.5 dB)	6GT2815-0BH10
	3 m (cable loss 1.0 dB)	6GT2815-0BH30
	5 m, suitable for drag chains (cable loss 1.5 dB)	6GT2815-2BH50
	10 m (cable loss 2.0 dB)	6GT2815-1BN10
	10 m (cable loss 4.0 dB)	6GT2815-0BN10
	15 m, suitable for drag chains (cable loss 4.0 dB)	6GT2815-2BN15
	20 m (cable loss 4.0 dB)	6GT2815-0BN20
	40 m (cable loss 5.0 dB)	6GT2815-0BN40
SIMATIC antenna holder for RF600 devices		6GT2890-2AB10
Antenna mounting kit		6GT2890-0AA00

6.5.3 Installation

Mounting system

A standardized VESA 100 mounting system is provided to mount the antenna. The mounting system consists of four fixing holes for M4 screws at intervals of 100 mm. The antenna is suitable for mounting on metallic and non-metallic surfaces.

Note

Achieving optimum wave propagation

To achieve optimum wave propagation, the antenna should not be surrounded by conducting objects. The area between antenna and transponder should also allow wave propagation without interference.

Antenna holders

The Siemens antenna holders allow for fine adjustment of the antenna field by setting the solid angle.

6.5.4 Connecting the antenna

The SIMATIC RF642A antenna must be connected to the reader using an antenna cable.

Preassembled standard cables in lengths of 1 m, 3 m, 5 m, 10 m, 15 m, 20 m and 40 m are available to connect the antenna.

The range of the antenna is limited by the cable loss. The maximum range can be achieved with the cable 6GT2815-0BH10 (length 1 m), since this cable has the lowest cable loss.

Requirement

Note

Use of Siemens antenna cable

To ensure optimum functioning of the antenna, it is recommended that a Siemens antenna cable is used in accordance with the list of accessories.

Strain relief

To protect the antenna connecting cable from strain, you can attach strain relief, e.g. in the form of a strain relief clamp. The following graphic shows the optimum mounting point for attaching strain relief.

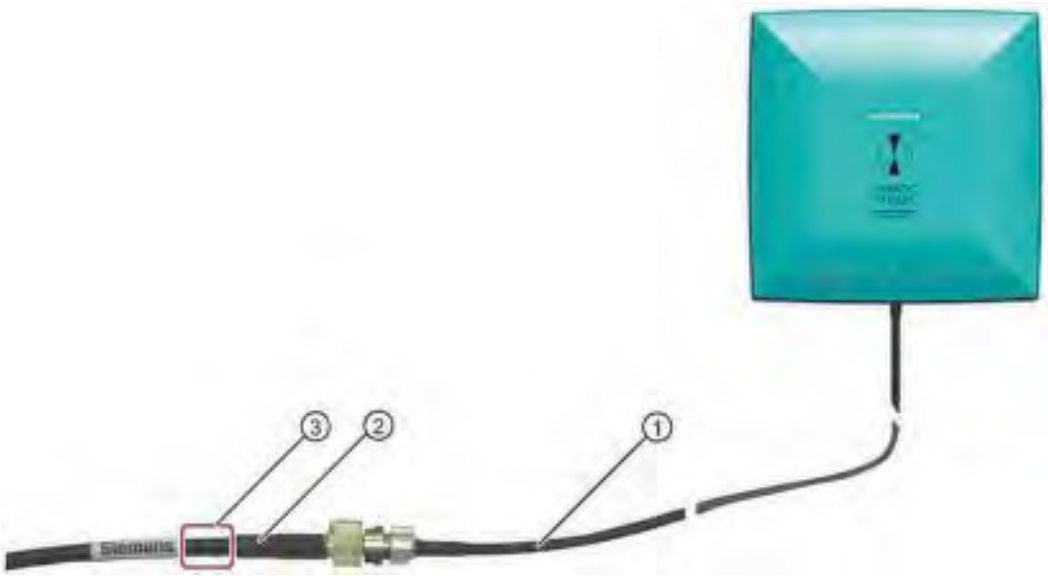

① RF642A antenna connecting cable
② RF600 antenna cable
③ Mounting point for strain relief

Figure 6-31 Strain relief

6.5.4.1 Bending radii and bending cycles of the cable

The following listed bending radii are minimum values, which may not be fallen below and are based on repeated bending.

Table 6- 24 Bending radii of the antenna cable

Cable designa-tion	Article number	Length [m]	Cable loss [dB]	Bending radius [mm]
Antenna cable	6GT2815-0BH10	1	0.5	51
Antenna cable	6GT2815-0BH30	3	1	51
Antenna cable (suitable for drag chains)	6GT2815-2BH50	5	1.5	45 [1) 2)]
Antenna cable	6GT2815-1BN10	10	2	77
Antenna cable	6GT2815-0BN10	10	4	51
Antenna cable (suitable for drag chains)	6GT2815-2BN15	15	4	45 [1) 2)]
Antenna cable	6GT2815-0BN20	20	4	77
Antenna cable	6GT2815-0BN40	40	5	77

1) Permissible minimum bending radius with one-time bending. 28 mm

2) With cables capable of being used in drag chains, 100,000 bending cycles at a bending radius of 100 mm and a bend of ± 180° or 3 million torsion cycles with a bend of ± 180° on a cable length of 1 m are permitted.

6.5.5 Antenna parameter assignment

6.5.5.1 Alignment of transponders to the antenna

Polarization axis

Since the RF642A antenna has linear polarization, it is necessary to consider the alignment of the transponders with regard to the polarization axis of the antenna.

The polarization axes of antenna and transponder must always be parallel. The symbol on the antenna indicates the polarization axis.

Figure 6-32 Polarization axis

Alignment

The following diagram shows the optimum alignment of the RF600 transponders to the RF642A antenna.

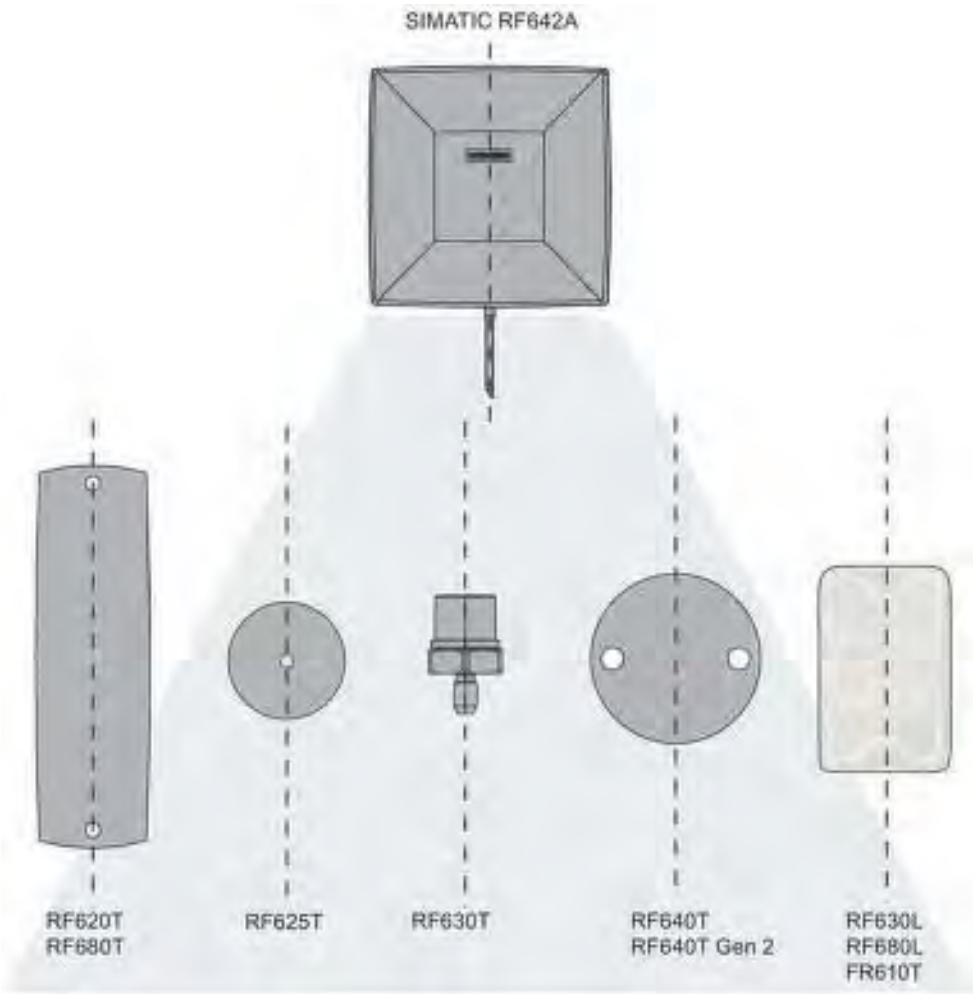

Figure 6-33 Antenna/transponder alignment

Angle deviation diagram for alignment

The following diagram shows the dependence of the following factors.

- Alignment angle of transponder to antenna
- Maximum range of antenna

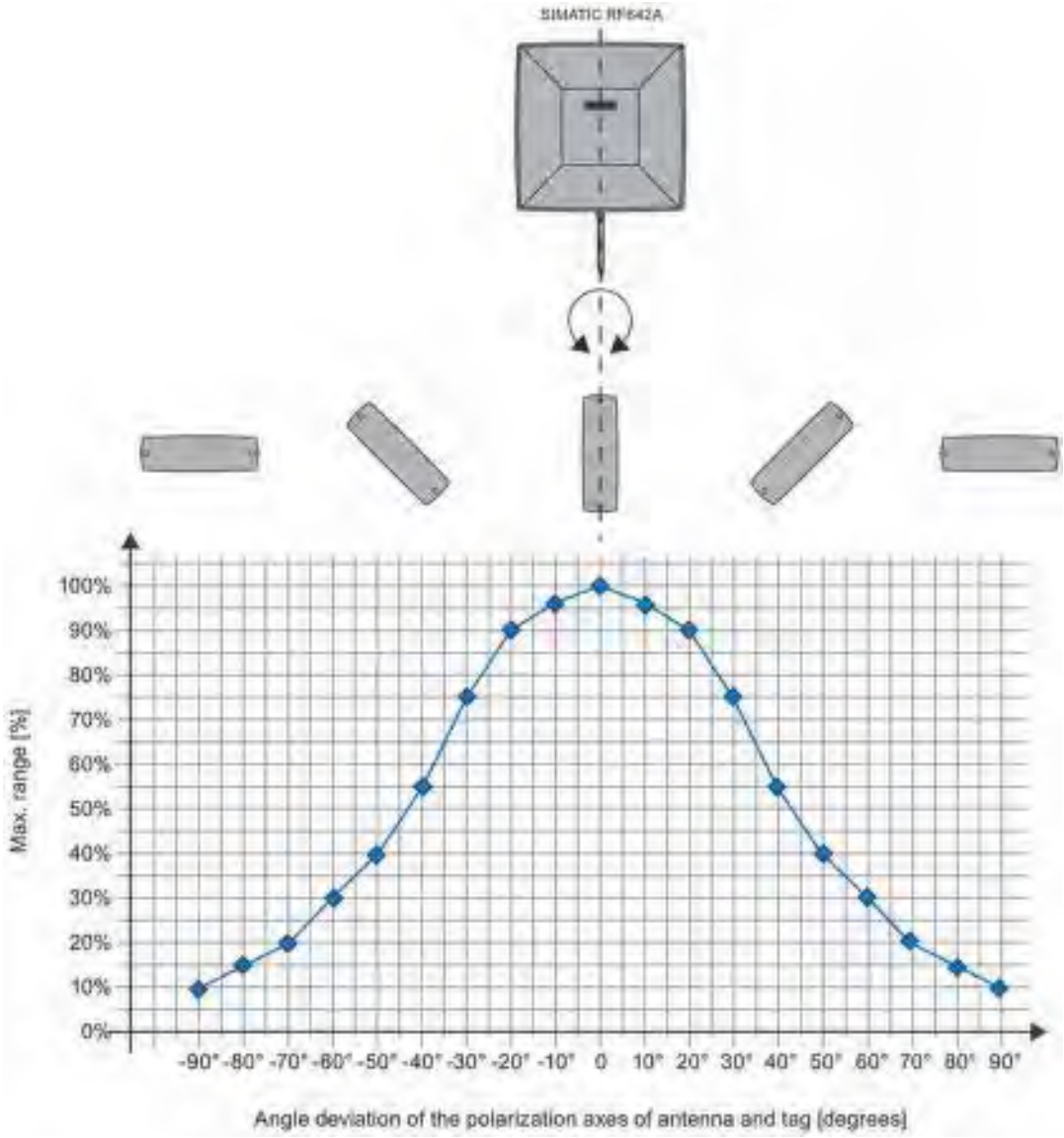

Figure 6-34 Angle deviation diagram for alignment

6.5.5.2 RF642A parameter assignment

Depending on the country or region in which the antenna is being operated, it is subject to regional limitations with respect to the radiated power.

Limitations in the EU, EFTA, or Turkey

Note

Limitation of the radiated power according to EN 302 208 V1.4.1 (ETSI)

RF600 systems that are put into operation in the EU, EFTA or Turkey must not exceed the following radiated power with an RF642A antenna:

- 2000 mW ERP (or 33 dBm ERP)
  Converted into EIRP: 3250 mW EIRP (or 35 dBm EIRP)

Make the following settings to ensure that the maximum permitted radiated power of the antenna is not exceeded:

- Antenna gain: 6 dBi
- Radiated power: ≤ 2000 mW ERP (or 33 dBm ERP)
  Converted into EIRP: ≤ 3250 mW EIRP (or 35 dBm EIRP)
- Use of cable loss associated with the antenna cable.

Limitations in the USA and Canada

Note

Limitation of the radiated power (FCC)

RF600 systems that are put into operation in the USA and Canada must not exceed the following radiated power with an RF642A antenna:

- 4000 mW EIRP (or 36 dBm EIRP)

Make the following settings to ensure that the maximum permitted radiated power of the antenna is not exceeded:

- Conducted power P (dBm) of the RF600 reader: < 30 dBm
- Antenna gain G_i (dBi) in the FCC frequency band: ≤ 7 dBi
- Cable loss a_k (dB): ≥ 1 dB

$P\ (dBm) \leq 30\ dBm - (G_i - 6\ dBi) + a_k$

Limitations in China

Note

Limitation of the radiated power (CMIIT)

RF600 systems that are put into operation in China must not exceed the following radiated power with an RF642A antenna:

- 2000 mW ERP (or 33 dBm ERP)

  Converted into EIRP: 3250 mW EIRP (or 35 dBm EIRP)

Make the following settings to ensure that the maximum permitted radiated power of the antenna is not exceeded:

- Antenna gain: 7 dBi (or 10 dBiC)
- Radiated power: ≤ 2000 mW ERP (or 33 dBm ERP)

  Converted into EIRP: ≤ 3250 mW EIRP (or 35 dBm EIRP)
- Use of cable loss associated with the antenna cable.

Limitations in Japan

Note

Limitation of the radiated power (ARIB STD-T106)

RF600 systems that are put into operation in Japan must not exceed the following radiated power with an RF642A antenna:

- 500 mW EIRP (or 27 dBm EIRP) for operation with RF650R (ARIB STD-T107)

6.5.6 Antenna patterns

6.5.6.1 Antenna radiation patterns in the ETSI frequency band

Directional radiation pattern ETSI

The directional radiation pattern is shown for nominal alignment and a center frequency of 866.3 MHz. The nominal antenna alignment is given when the antenna elevation is provided as shown in the following figure.

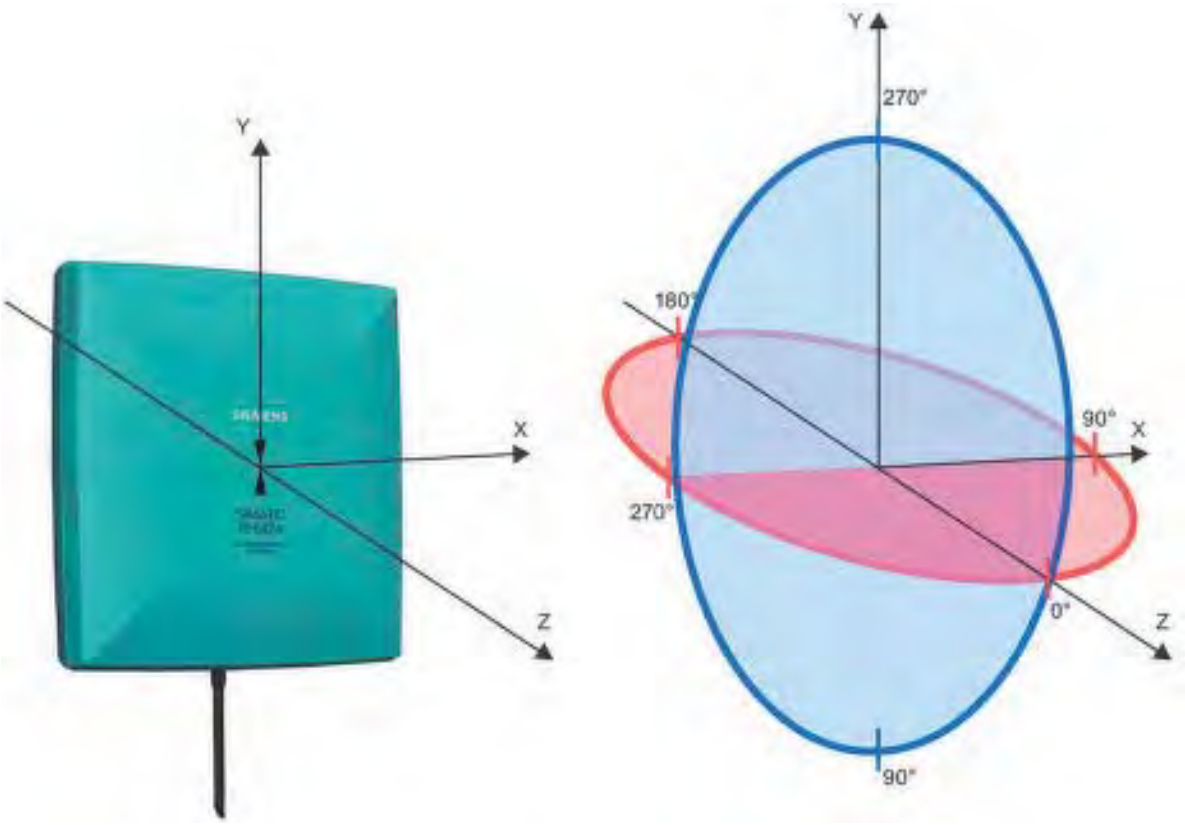

Figure 6-35 Reference system

The half-power beam width of the antenna is defined by the angle between the two -3 dB points. The range (in %) corresponding to the dB values in the patterns can be obtained from this table (Page 306).

Note that the measurements presented graphically below were carried out in a low-reflection environment. Deviations can therefore occur in a normally reflecting environment.

Directional radiation pattern in the ETSI frequency band

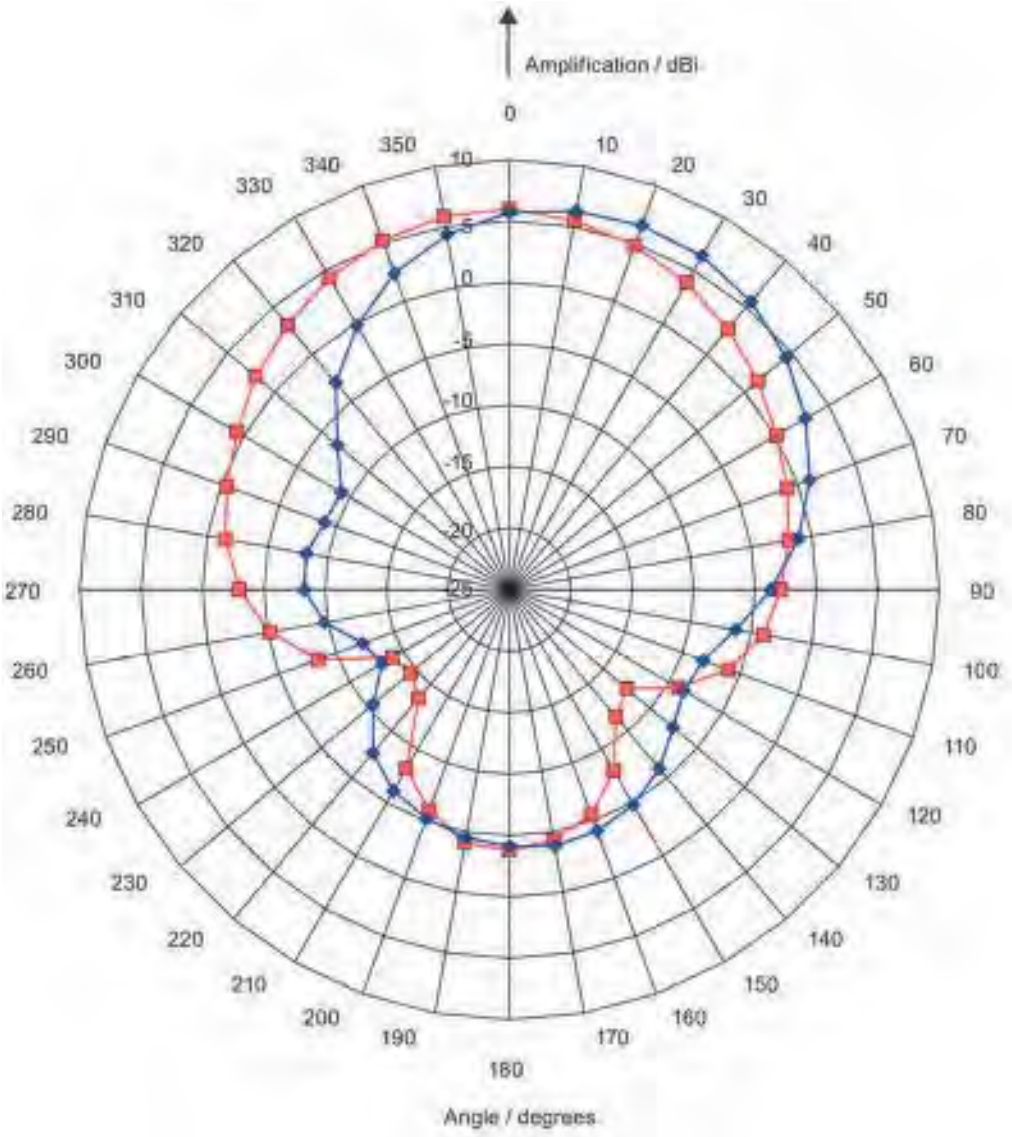

Pattern of the vertical plane of the antenna

Pattern of the horizontal plane of the antenna

Figure 6-36 Directional radiation pattern of RF642A in the ETSI frequency band

6.5.6.2 Antenna radiation patterns in the FCC frequency band

Directional radiation pattern USA (FCC)

The directional radiation pattern is shown for nominal alignment and a center frequency of 915 MHz.

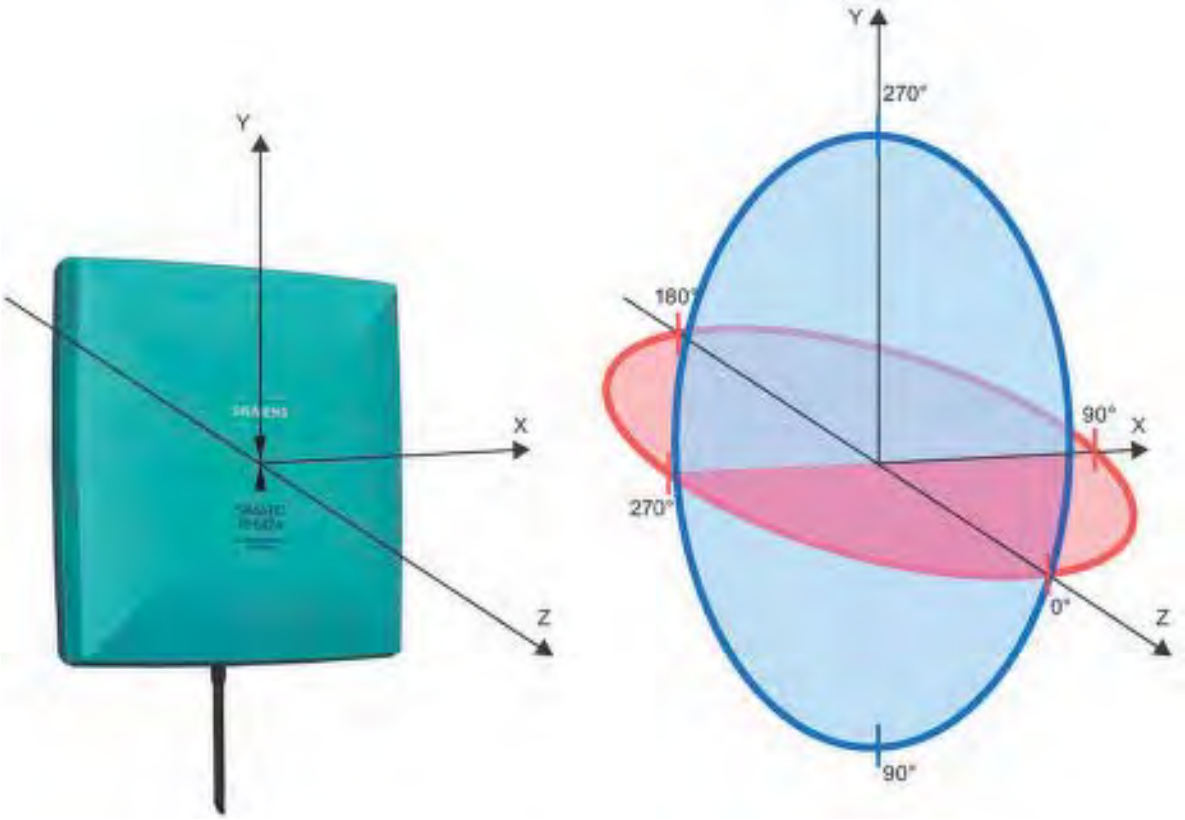

Figure 6-37 Reference system

The half-power beam width of the antenna is defined by the angle between the two -3 dB points (corresponding to half the power referred to the maximum power). Which range (in %) corresponds to the dB values in the patterns can be obtained from this table .

Note that the measurements presented graphically below were carried out in a low-reflection environment. Deviations can therefore occur in a normally reflecting environment.

Directional radiation pattern of the RF642A in the FCC frequency band

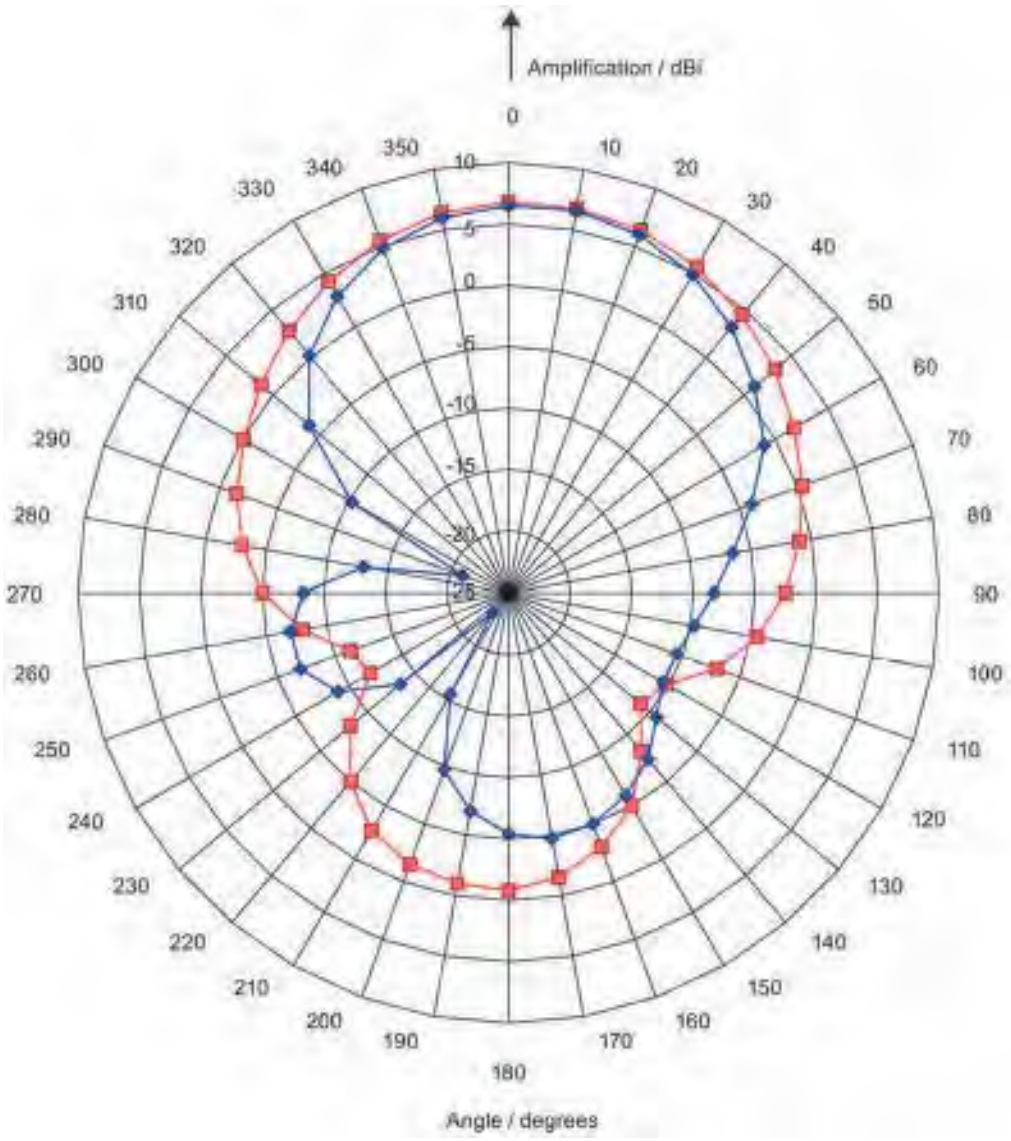

Pattern of the vertical plane of the antenna

Pattern of the horizontal plane of the antenna

Figure 6-38 Directional radiation pattern of the RF642A in the FCC frequency band

6.5.6.3 Interpretation of directional radiation patterns

The following overview table will help you with the interpretation of directional radiation patterns.

The table shows which dBi values correspond to which read/write ranges (in %): You can read the radiated power depending on the reference angle from the directional radiation patterns, and thus obtain information on the read/write range with this reference angle with regard to a transponder.

The dBr values correspond to the difference between the maximum dBi value and a second dBi value.

Deviation from maximum antenna gain [dBr]	Read/write range [%]
0	100
-3	70
-6	50
-9	35
-12	25
-15	18
-18	13

Example

As can be seen in Directional radiation pattern in the ETSI frequency band (Page 303), the maximum antenna gain in the horizontal plane is 6 dBi. In this plane and with the parallel polarization axis at +70° or 300°, the antenna gain dropped to about 0 dBi. Therefore the dBr value is 6. The antenna range is only 70° of the maximum range at + 50° or +300° from the Z axis within the horizontal plane (see values shown in red in the directional radiation pattern: Characteristic of the vertical plane of the antenna (Page 302) and the associated representation of the reference system (Page 302)).

6.5.7 Technical data

Table 6- 25 Technical specifications for the RF642A antenna

	6GT2812-1GA08
Product type designation	SIMATIC RF642A
Radio frequencies	
Operating frequency	865 to 928 MHz
Maximum radiated power	
• ETSI	• RF650R: ≤ 2000 mW ERP RF680R/RF685R: ≤ 2000 mW ERP
• FCC	• RF650R: ≤ 4000 mW EIRP RF680R/RF685R: ≤ 4000 mW EIRP
• CMIIT	• RF650R: ≤ 1900 mW ERP RF680R/RF685R: ≤ 2000 mW ERP
• ARIB	• STD-T107: RF650R: ≤ 500 mW EIRP
Antenna gain	
• ETSI	• 6 dBi
• FCC	• 7 dBi
Opening angle for sending/receiving when mounted on a metal surface of 15 cm x 15 cm [1)]	
• ETSI	• Horizontal plane: 75° Vertical plane: 70° see section "Directional radiation pattern in the ETSI frequency band (Page 303)"
• FCC	• Horizontal plane: 80° Vertical plane: 70° see section "Directional radiation pattern of the RF642A in the FCC frequency band (Page 305)"
Front-to-back ratio	
• ETSI	• 10 dB
• FCC	• 9.8 dB ± 2.2 dB
Electrical data	
Range	See section "Maximum read/write ranges of transponders (Page 59)"
Impedance	50 Ω
Polarization	Linear
VSWR (standing wave ratio)	≤ 1.5
Power	2 W

	6GT2812-1GA08
Interfaces	
Plug connection	30 cm coaxial cable with RP-TNC coupling (for connection of the antenna cable)
Mechanical specifications	
Material	PA 12
Color	Pastel turquoise
Tightening torque (at room temperature)	≤ 2 Nm
Permitted ambient conditions	
Ambient temperature	
• During operation	• -25 ... +75 °C
• During transportation and storage	• -40 ... +85 °C
Degree of protection	IP65
Shock resistant to EN 60068-2-27	25.5 g [2)]
Vibrations according to EN 60068-2-6	1 g [2)]
Design, dimensions and weight	
Dimensions (H x W x D)	185 x 185 x 45 mm
Weight	600 g
Standards, specifications, approvals	
Proof of suitability	CE (according to RED), FCC (Title 47, Part 15.247), cULus
MTBF	16880 years

1) The values differ for different dimensions/materials of the mounting surface.

2) The values for shock and vibration are maximum values and must not be applied continuously.

6.5.8 Dimension drawing

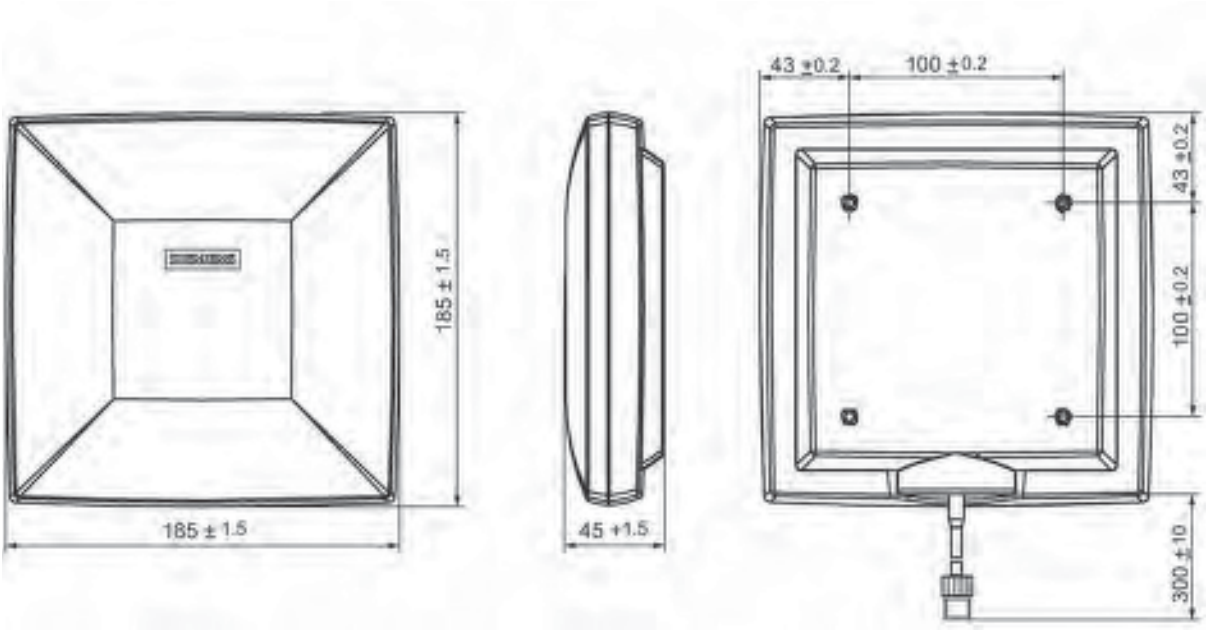

Figure 6-39 Dimensional drawing of RF642A

All dimensions in mm

6.5.9 Approvals & certificates

Table 6- 26 6GT2812-1GA08

Labeling	Description
CE	Conformity with the RED directive 2014/53/EU Conformity with the RoHS directive 2011/65/EU

Table 6- 27 6GT2812-1GA08

Labeling	Description
FC Federal Communications Commission	FCC CFR 47, Part 15 sections 15.247 Radio Frequency Interference Statement This equipment has been tested and found to comply with the limits for a Class B digital device, pursuant to Part 15 of the FCC Rules. The FCC approval is granted in association with the FCC approval of the following RF600 readers: • FCC ID: NXW-RF600R2 (for RF650R: 6GT2811-6AB20-1AA0, RF680R: 6GT2811-6AA10-1AA0, RF685R: 6GT2811-6CA10-1AA0)
Industry Canada Radio Standards Specifications	RSS-210 Issue 7, June 2007, Sections 2.2, A8 The approval for Industry Canada is granted in association with the Industry Canada approval of the following RF600 readers: • IC: 267X-RF600R2, Model RF650R (for 6GT2811-6AB20-1AA0) • IC: 267X-RF600R2, Model RF680R (for 6GT2811-6AA10-1AA0) • IC: 267X-RF600R2, Model RF685R (for 6GT2811-6CA10-1AA0)
UL C US	This product is UL-certified for the USA and Canada. It meets the following safety standard(s): • UL 60950-1 - Information Technology Equipment Safety - Part 1: General Requirements • CSA C22.2 No. 60950 -1 - Safety of Information Technology Equipment • UL Report E 205089

6.6 SIMATIC RF650A

6.6.1 Characteristics

SIMATIC RF650A	Characteristics	
	Area of application	The SIMATIC RF650A is a universal UHF antenna in a medium size with medium range for industrial applications in production and logistics
	Frequency range	865 to 928 MHz
	Read range	Max. 6 m
	Polarization	Circular
	Degree of protection	IP65
	Mounting	4 x M4 (VESA 100 fixing system)
	Connector	The antenna is connected directly to the housing with an RP-TNC coupling ①.

Frequency ranges

The antenna is a broadband antenna and covers the frequency ranges from 865 to 928 MHz.

Function

The SIMATIC RF650A is used for transmitting and receiving data in the UHF range. The antennas are connected to the SIMATIC RF600 readers via antenna cables that are available in different lengths.

6.6.2 Ordering data

Table 6- 28 Ordering data RF650A

Product	Article number
SIMATIC RF650A	6GT2812-0GB08

Table 6- 29 Ordering data accessories

Product		Article number
Connecting cable between reader and antenna	1 m (cable loss 0.5 dB)	6GT2815-0BH10
	3 m (cable loss 1.0 dB)	6GT2815-0BH30
	5 m, suitable for drag chains (cable loss 1.5 dB)	6GT2815-2BH50
	10 m (cable loss 2.0 dB)	6GT2815-1BN10
	10 m (cable loss 4.0 dB)	6GT2815-0BN10
	15 m, suitable for drag chains (cable loss 4.0 dB)	6GT2815-2BN15
	20 m (cable loss 4.0 dB)	6GT2815-0BN20
	40 m (cable loss 5.0 dB)	6GT2815-0BN40
SIMATIC antenna holder for RF600 devices		6GT2890-2AB10
Antenna mounting kit		6GT2890-0AA00

6.6.3 Installation

Mounting system

A standardized VESA 100 mounting system is provided to mount the antenna. The mounting system consists of four fixing holes for M4 screws at intervals of 100 mm. The antenna is suitable for mounting on metallic and non-metallic surfaces.

Note

Achieving optimum wave propagation

To achieve optimum wave propagation, the antenna should not be surrounded by conducting objects. The area between antenna and transponder should also allow wave propagation without interference.

Antenna holders

The Siemens antenna holders allow for fine adjustment of the antenna field by setting the solid angle.

6.6.4 Connecting the antenna

The SIMATIC RF650A antenna must be connected to the reader using an antenna cable.

Preassembled standard cables in lengths of 1 m, 3 m, 5 m, 10 m, 15 m, 20 m and 40 m are available to connect the antenna.

The range of the antenna is limited by the cable loss. The maximum range can be achieved with the cable 6GT2815-0BH10 (length 1 m), since this cable has the lowest cable loss.

Requirement

Note

Use of Siemens antenna cables

To ensure optimum functioning of the antenna, it is recommended that a Siemens antenna cable be used in accordance with the list of accessories.

Strain relief

To protect the antenna from strain, you can attach strain relief, e.g. in the form of a strain relief clamp. The following graphic shows the optimum mounting point for attaching strain relief.

① RF600 antenna cable
② Mounting point for strain relief

Figure 6-40 RF 650A strain relief

6.6.4.1 Bending radii and bending cycles of the cable

The following listed bending radii are minimum values, which may not be fallen below and are based on repeated bending.

Table 6- 30 Bending radii of the antenna cable

Cable designa-tion	Article number	Length [m]	Cable loss [dB]	Bending radius [mm]
Antenna cable	6GT2815-0BH10	1	0.5	51
Antenna cable	6GT2815-0BH30	3	1	51
Antenna cable (suitable for drag chains)	6GT2815-2BH50	5	1.5	45 [1) 2)]
Antenna cable	6GT2815-1BN10	10	2	77
Antenna cable	6GT2815-0BN10	10	4	51
Antenna cable (suitable for drag chains)	6GT2815-2BN15	15	4	45 [1) 2)]
Antenna cable	6GT2815-0BN20	20	4	77
Antenna cable	6GT2815-0BN40	40	5	77

1) Permissible minimum bending radius with one-time bending. 28 mm

2) With cables capable of being used in drag chains, 100,000 bending cycles at a bending radius of 100 mm and a bend of ± 180° or 3 million torsion cycles with a bend of ± 180° on a cable length of 1 m are permitted.

6.6.5 Antenna parameter assignment

Depending on the country or region in which the antenna is being operated, it is subject to regional limitations with respect to the radiated power.

Limitations in the EU, EFTA, or Turkey

Note

Limitation of the radiated power according to EN 302 208 V1.4.1 (ETSI)

RF600 systems that are put into operation in the EU, EFTA or Turkey must not exceed the following radiated power with an RF650A antenna:

- 2000 mW ERP (or 33 dBm ERP)
  Converted into EIRP: 3250 mW EIRP (or 35 dBm EIRP)

Make the following settings to ensure that the maximum permitted radiated power of the antenna is not exceeded:

- Antenna gain: 4 dBi (7 dBic)
- Radiated power: ≤ 1300 mW ERP (or 31.15 dBm ERP)

  Converted into EIRP: ≤ 2140 mW EIRP (or 33.3 dBm EIRP)
- Use of cable loss associated with the antenna cable.

Limitations in the USA and Canada

Note

Limitation of the radiated power (FCC)

RF600 systems that are put into operation in the USA and Canada must not exceed the following radiated power with an RF650A antenna:

- 4000 mW EIRP (or 36 dBm EIRP)

Make the following settings to ensure that the maximum permitted radiated power of the antenna is not exceeded:

- Conducted power P (dBm) of the RF600 reader: < 30 dBm
- Antenna gain G_i (dBi) in the FCC frequency band: ≤ 3.5 dBi
- Cable loss a_k (dB): ≥ 1 dB

$P\ (dBm) \leq 30\ dBm - (G_i - 6\ dBi) + a_k$

Limitations in China

Note

Limitation of the radiated power (CMIIT)

RF600 systems that are put into operation in China must not exceed the following radiated power with an RF650A antenna:

- 2000 mW ERP (or 33 dBm ERP)

  Converted into EIRP: 3250 mW EIRP (or 35 dBm EIRP)

Make the following settings to ensure that the maximum permitted radiated power of the antenna is not exceeded:

- Antenna gain: 3.5 dBi (6.5 dBic)
- Radiated power: ≤ 2000 mW ERP (or 33 dBm ERP)

  Converted into EIRP: ≤ 3250 mW EIRP (or 35 dBm EIRP)
- Use of cable loss associated with the antenna cable.

Limitations in Japan

Note

Limitation of the radiated power (ARIB)

RF600 systems that are put into operation in Japan must not exceed the following radiated power with an RF650A antenna:

- 500 mW EIRP (or 27 dBm EIRP) for operation with RF650R (ARIB STD-T107)
- 4000 mW EIRP (or 36 dBm EIRP) for operation with RF680R/RF685R (ARIB STD-T106)

6.6.6 Antenna patterns

Transponder alignment

The RF650A antenna has a circular antenna. With a circular antenna the alignment of the antenna axis of symmetry changes between horizontal and vertical each time it transmits. For this reason the alignment of the transponder polarization axis (horizontal/vertical) is unimportant. Make sure, however, that the transponder is aligned with the antenna.

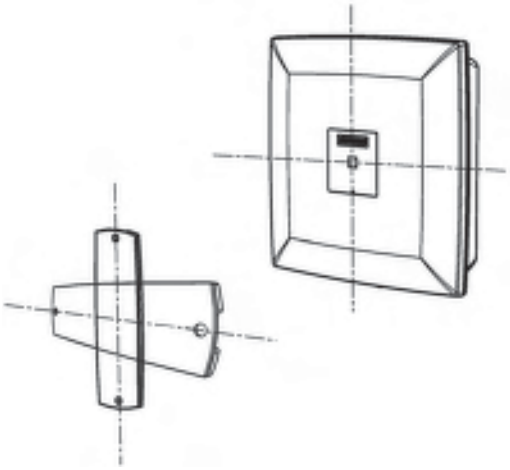

Figure 6-41 Alignment of the transponder polarization axis with a circular antenna axis of symmetry

6.6.6.1 Antenna patterns in the ETSI frequency band

Directional radiation pattern ETSI

The directional radiation pattern is shown for nominal alignment and a center frequency of 866.3 MHz. The nominal antenna alignment is given when the antenna elevation is provided as shown in the following figure.

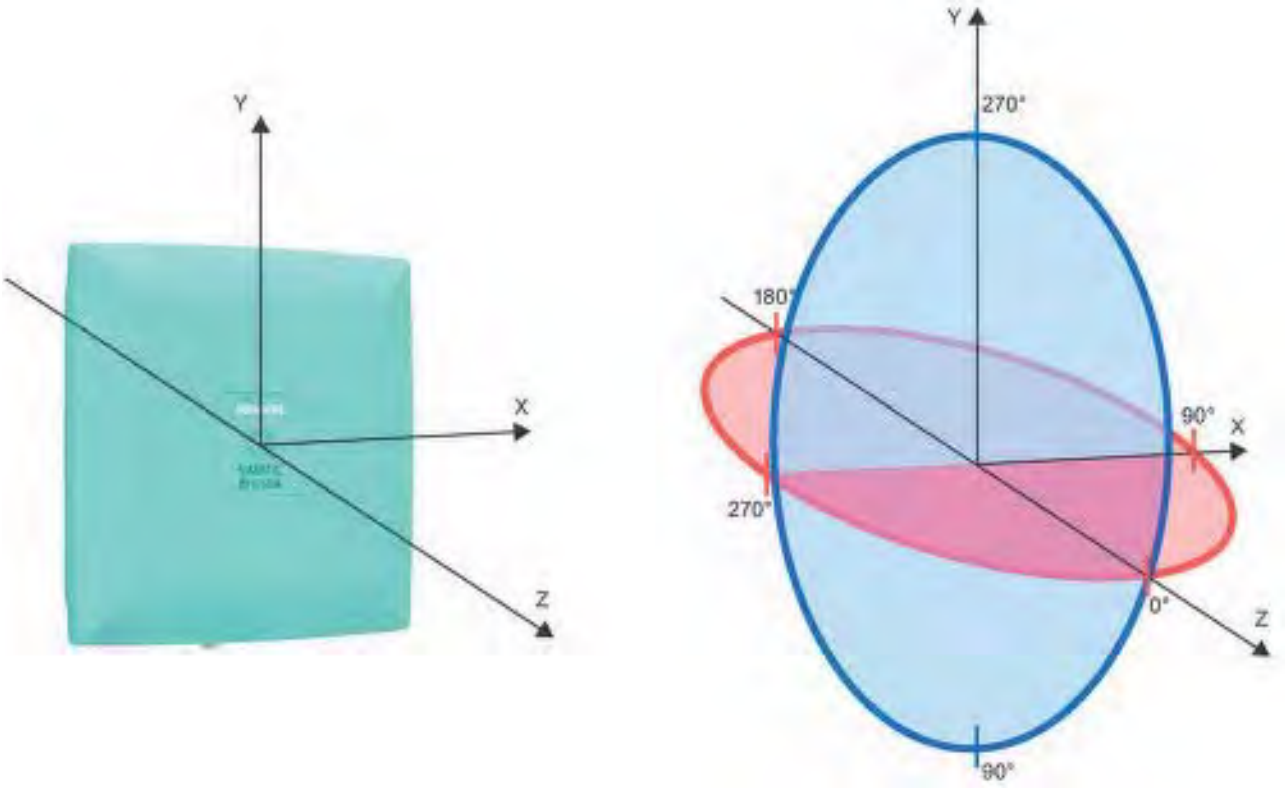

Figure 6-42 Reference system

The half-power beam width of the antenna is defined by the angle between the two -3 dB points. The range (in %) corresponding to the dB values in the patterns can be obtained from this table (Page 321).

Note that the measurements presented graphically below were carried out in a low-reflection environment. Deviations can therefore occur in a normally reflecting environment.

Radiation diagram (circular) in the ETSI frequency band

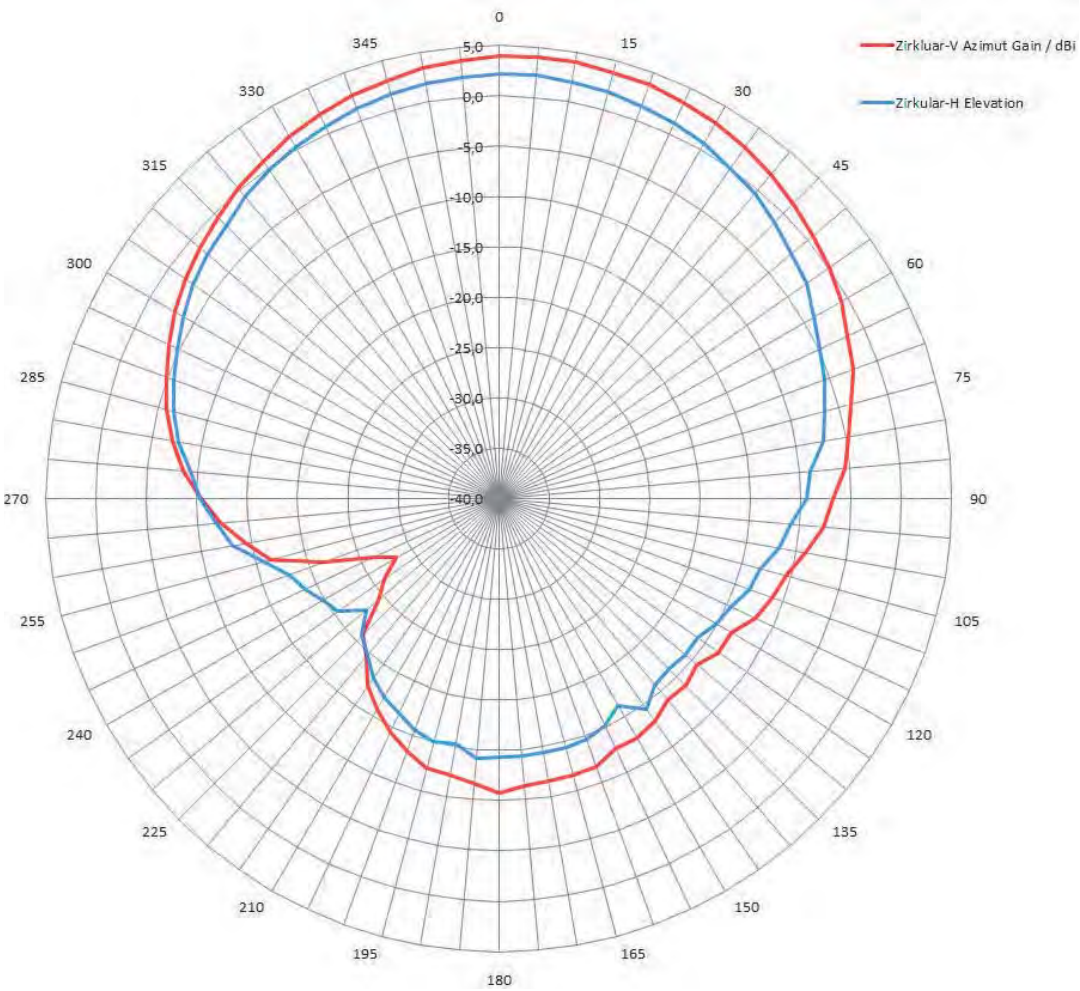

Pattern of the vertical plane of the antenna

Pattern of the horizontal plane of the antenna

Figure 6-43 Directional radiation pattern of RF650A in the ETSI frequency band

6.6.6.2 Antenna patterns in the FCC frequency band

Directional radiation pattern FCC

The directional radiation pattern is shown for nominal alignment and a center frequency of 915 MHz.

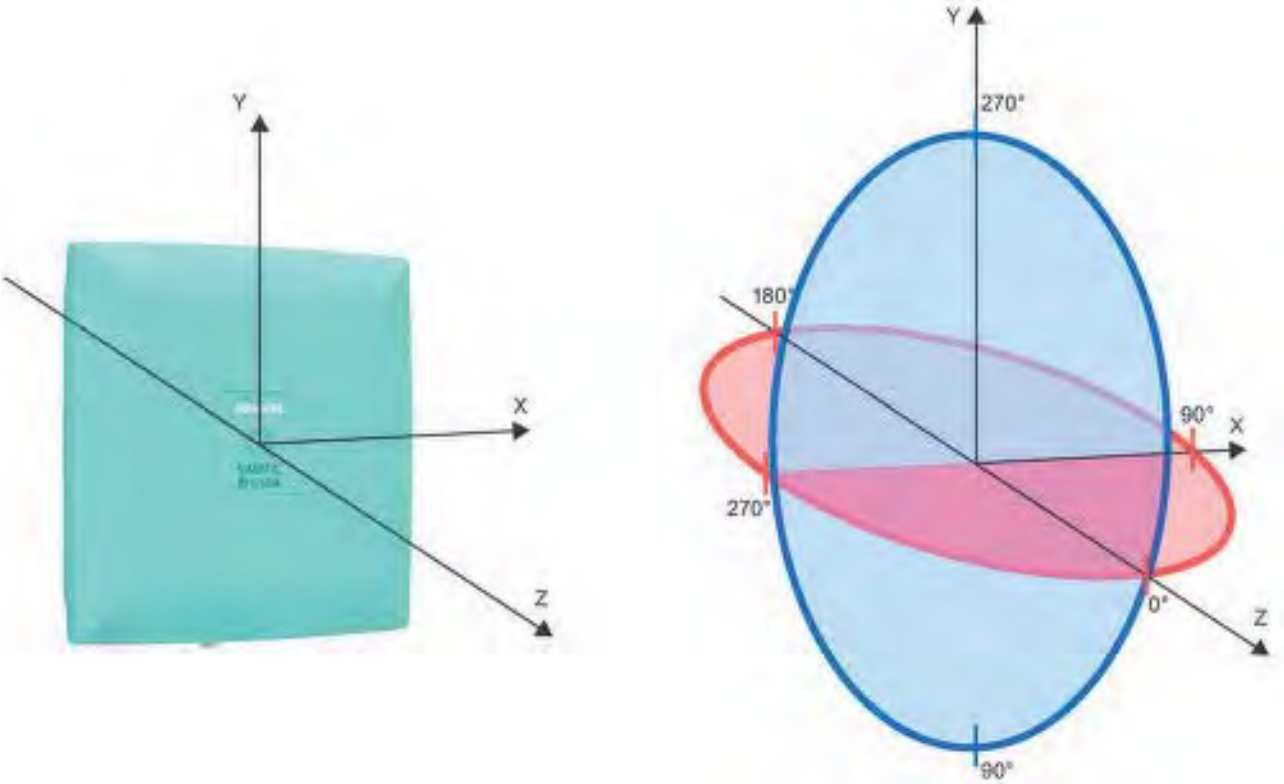

Figure 6-44 Reference system

The half-power beam width of the antenna is defined by the angle between the two -3 dB points (corresponding to half the power in relation to the maximum power). Which range (in %) corresponds to the dB values in the patterns can be obtained from this table (Page 321).

Note that the measurements presented graphically below were carried out in a low-reflection environment. Deviations can therefore occur in a normally reflecting environment.

Radiation diagram (circular) in the FCC frequency band

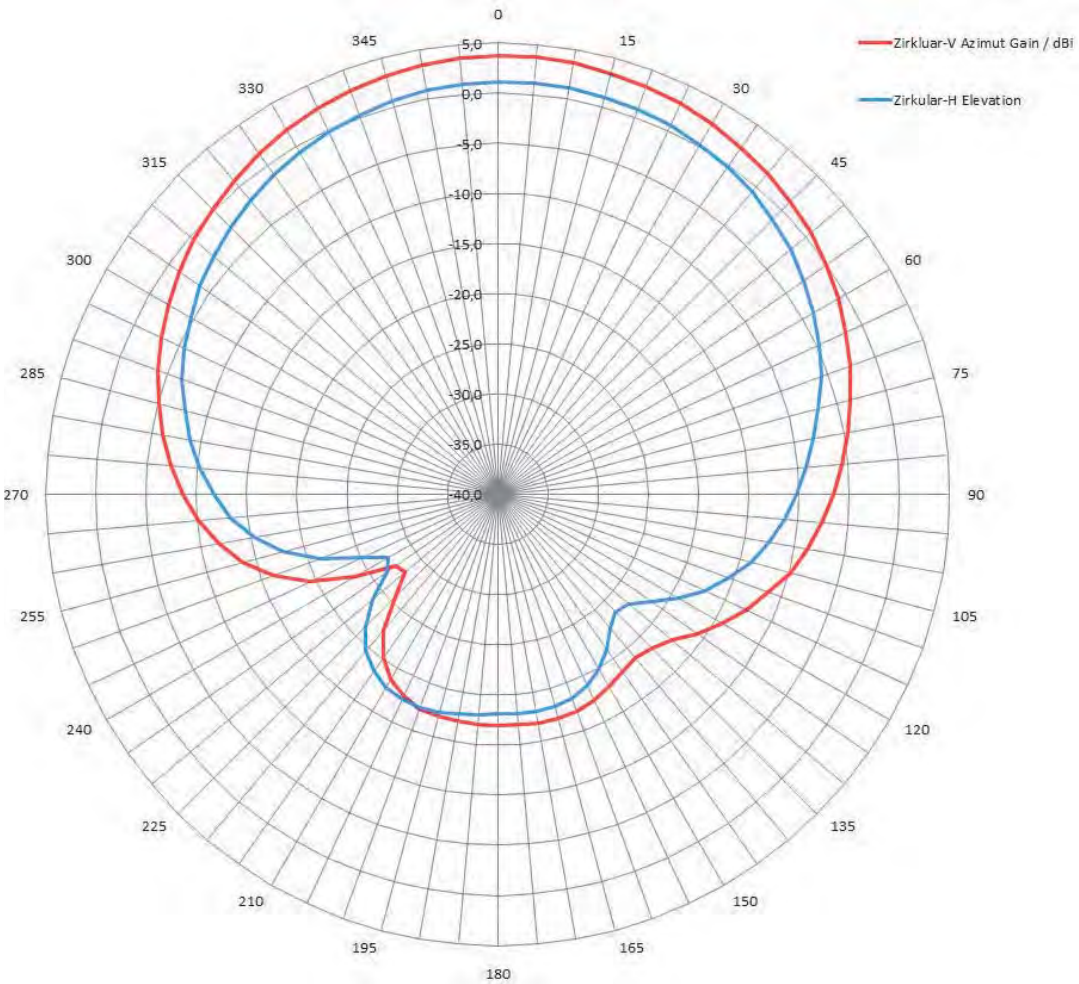

Pattern of the vertical plane of the antenna

Pattern of the horizontal plane of the antenna

Figure 6-45 Directional radiation pattern of the RF650A in the FCC frequency band

6.6.6.3 Interpretation of directional radiation patterns

The following overview table will help you with the interpretation of directional radiation patterns.

The table shows which dBi values correspond to which read/write ranges (in %): You can read the radiated power depending on the reference angle from the directional radiation patterns, and thus obtain information on the read/write range with this reference angle with regard to a transponder.

The dBr values correspond to the difference between the maximum dBi/dBic value and a second dBi/dBic value.

Table 6- 31 Interpretation of directional radiation patterns

Deviation from maximum antenna gain [dBr]	Read/write range [%]
0	100
-3	70
-6	50
-9	35
-12	25
-15	18
-18	13

Example

As can be seen in "Antenna patterns in the ETSI frequency band (Page 317)" the maximum antenna gain in the vertical plane is 3.45 dBi (6.45 dBic). In this plane, and with the polarization axis of the transponder parallel to the axis of symmetry of the antenna, the antenna gain drops to about 0.5 dBic at +50° or 310°. This means that the dBr value is -6. The antenna range is only +50% of the maximum range at + 50° or 310° from the Z axis within the vertical plane (see values shown in blue in the directional radiation pattern: Characteristic of the vertical plane of the antenna (Page 317)and the associated representation of the reference system (Page 317)).

6.6.7 Technical data

Table 6- 32 Technical specifications for the RF650A antenna

	6GT2812-0GB08
Product type designation	SIMATIC RF650A
Radio frequencies	
Operating frequency	865 to 928 MHz
Maximum radiated power	
• ETSI	• RF650R: ≤ 1365 mW ERP RF680R/RF685R: ≤ 2000 mW ERP
• FCC	• RF650R: ≤ 2240 mW EIRP RF680R/RF685R: ≤ 4000 mW EIRP
• CMIIT	• RF650R: ≤ 1365 mW ERP RF680R/RF685R: ≤ 2000 mW ERP
• ARIB	• STD-T107: RF650R: ≤ 500 mW EIRP • STD-T106: RF680R/RF685R: < 4000 mW EIRP
Antenna gain	
• ETSI	• 4 dBi (7 dBic)
• FCC	• 3.5 dBi (6.5 dBic)
Opening angle for sending/receiving when mounted on a metal surface of 15 cm x 15 cm [1)]	
• ETSI	• Horizontal plane: 83° Vertical plane: 70° see section "Antenna patterns in the ETSI frequency band (Page 317)"
• FCC	• Horizontal plane: 90° Vertical plane: 76° see section "Antenna patterns in the FCC frequency band (Page 319)"
Front-to-back ratio	
• ETSI	• 15 dB ± 2 dB (depends on orientation of the transponder)
• FCC	• 17.5 dB ± 2.5 dB (depends on orientation of the transponder)

	6GT2812-0GB08
Electrical data	
Range	See section "Maximum read/write ranges of transponders (Page 59)"
Impedance	50 Ω
Polarization	Circular
VSWR (standing wave ratio)	≤ 1.45
Power	≤ 2 W
Interfaces	
Plug connection	RP-TNC coupling (for connection of the antenna cable)
Mechanical specifications	
Material	Pocan
Color	Pastel turquoise
Tightening torque (at room temperature)	≤ 2 Nm
Permitted ambient conditions	
Ambient temperature	
• During operation	• -25 ... +75 °C
• During transportation and storage	• -40 ... +85 °C
Degree of protection	IP65
Shock resistant to EN 60068-2-27	30 g [2]
Vibrations according to EN 60068-2-6	10 g [2]
Design, dimensions and weight	
Dimensions (H x W x D)	198 x 198 x 60 mm
Weight	680 g
Standards, specifications, approvals	
Proof of suitability	CE (according to RED), FCC (Title 47, Part 15.247), cULus
MTBF	946 years

[1] The values differ for different dimensions/materials of the mounting surface.

[2] The values for shock and vibration are maximum values and must not be applied continuously.

6.6.8 Dimension drawing

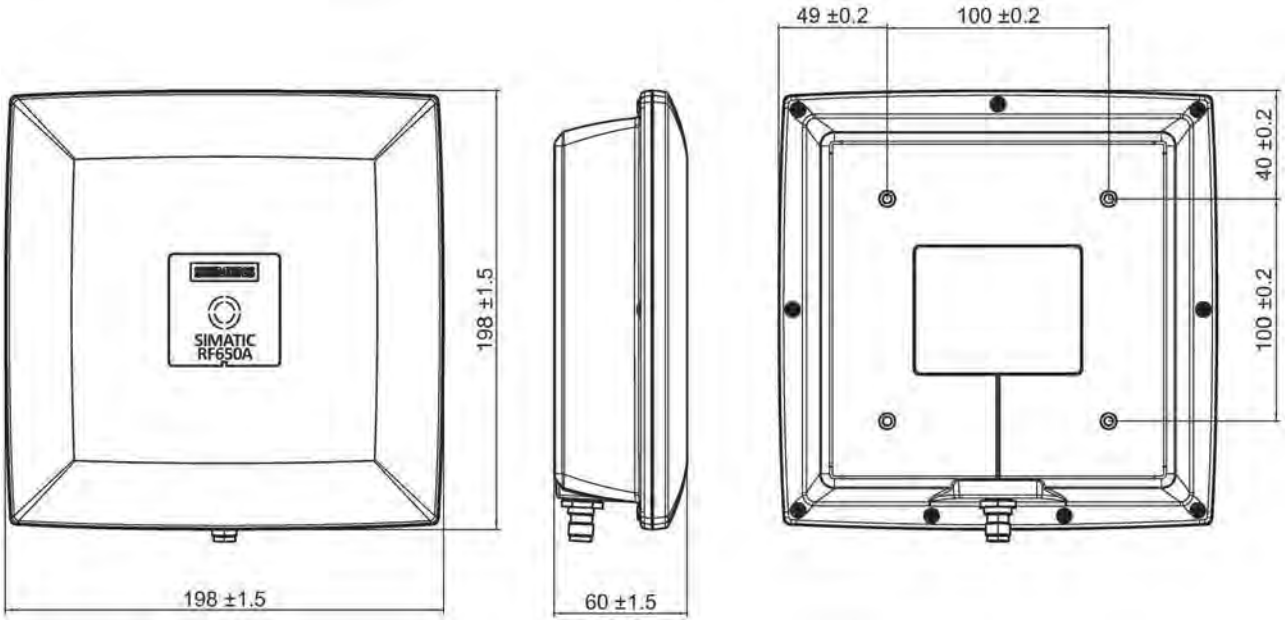

Figure 6-46 Dimension drawing RF650A

All dimensions in mm

6.6.9 Approvals & certificates

Table 6- 33 6GT2812-0GB08

Labeling	Description
CE	Conformity with the RED directive 2014/53/EU Conformity with the RoHS directive 2011/65/EU

Table 6- 34 6GT2812-0GB08

Labeling	Description
FC Federal Communications Commission	FCC CFR 47, Part 15 sections 15.247 Radio Frequency Interference Statement This equipment has been tested and found to comply with the limits for a Class B digital device, pursuant to Part 15 of the FCC Rules. The FCC approval is granted in association with the FCC approval of the following RF600 readers: • FCC ID: NXW-RF615R (for RF615R: 6GT2811-6CC10-1AA0) • FCC ID: NXW-RF600R2 (for RF650R: 6GT2811-6AB20-1AA0, RF680R: 6GT2811-6AA10-1AA0, RF685R: 6GT2811-6CA10-1AA0)
Industry Canada Radio Standards Specifications	RSS-247 Issue 2 The approval for Industry Canada is granted in association with the Industry Canada approval of the following RF600 readers: • IC: 267X-RF615R, Model RF615R (for 6GT2811-6CC10-1AA0) RSS-210 Issue 7, June 2007, Sections 2.2, A8 The approval for Industry Canada is granted in association with the Industry Canada approval of the following RF600 readers: • IC: 267X-RF600R2, Model RF650R (for 6GT2811-6AB20-1AA0) • IC: 267X-RF600R2, Model RF680R (for 6GT2811-6AA10-1AA0) • IC: 267X-RF600R2, Model RF685R (for 6GT2811-6CA10-1AA0)
UL C US	This product is UL-certified for the USA and Canada. It meets the following safety standard(s): • UL 60950-1 - Information Technology Equipment Safety - Part 1: General Requirements • CSA C22.2 No. 60950 -1 - Safety of Information Technology Equipment • UL Report E 115352

6.7 SIMATIC RF660A

6.7.1 Characteristics

SIMATIC RF660A	Characteristics	
	Area of application	The SIMATIC RF660A is a universal UHF antenna with high range for industrial applications in production and logistics.
	Frequency ranges	• 865 to 868 MHz (RF660A FCC) • 902 to 928 MHz (RF660A FCC)
	Read range	Max. 8 m
	Polarization	Circular
	Degree of protection	IP67
	Mounting	4 x M4 (VESA 100 fixing system)
	Connector	The antenna is connected directly to the housing with an RP-TNC coupling.

Frequency ranges

The antenna is a narrowband antenna and is available in the following two frequency range variants.

- RF660A ETSI: 865 to 868 MHz
- RF660A FCC: 902 to 928 MHz

Function

The SIMATIC RF660A is used for transmitting and receiving data in the UHF range. The antennas are connected to the SIMATIC RF600 readers via antenna cables that are available in different lengths.

6.7.2 Ordering data

Table 6- 35 Ordering data RF660A

Product	Article number
SIMATIC RF660A (ETSI)	6GT2812-0AA00
SIMATIC RF660A (FCC)	6GT2812-0AA01

Table 6- 36 Ordering data accessories

Product		Article number
Connecting cable between reader and antenna	1 m (cable loss 0.5 dB)	6GT2815-0BH10
	3 m (cable loss 1.0 dB)	6GT2815-0BH30
	5 m, suitable for drag chains (cable loss 1.5 dB)	6GT2815-2BH50
	10 m (cable loss 2.0 dB)	6GT2815-1BN10
	10 m (cable loss 4.0 dB)	6GT2815-0BN10
	15 m, suitable for drag chains (cable loss 4.0 dB)	6GT2815-2BN15
	20 m (cable loss 4.0 dB)	6GT2815-0BN20
	40 m (cable loss 5.0 dB)	6GT2815-0BN40
SIMATIC antenna holder for RF600 devices		6GT2890-2AB10
Antenna mounting kit		6GT2890-0AA00

6.7.3 Installation

Mounting system

A standardized VESA 100 mounting system is provided to mount the antenna. The mounting system consists of four fixing holes for M4 screws at intervals of 100 mm. The antenna is suitable for mounting on metallic and non-metallic surfaces.

Note

Achieving optimum wave propagation

To achieve optimum wave propagation, the antenna should not be surrounded by conducting objects. The area between antenna and transponder should also allow wave propagation without interference.

Antenna holders

The Siemens antenna holders allow for fine adjustment of the antenna field by setting the solid angle.

6.7.4 Connecting the antenna

The SIMATIC RF660A antenna must be connected to the reader using an antenna cable.

Preassembled standard cables in lengths of 1 m, 3 m, 5 m, 10 m, 15 m, 20 m and 40 m are available to connect the antenna.

The range of the antenna is limited by the cable loss. The maximum range can be achieved with the cable 6GT2815-0BH10 (length 1m), since this cable has the lowest cable loss.

Requirement

Note

Use of Siemens antenna cable

To ensure optimum functioning of the antenna, it is recommended that a Siemens antenna cable is used in accordance with the list of accessories.

Figure 6-47 Rear of antenna with RTNC connection

6.7.4.1 Bending radii and bending cycles of the cable

The following listed bending radii are minimum values, which may not be fallen below and are based on repeated bending.

Table 6- 37 Bending radii of the antenna cable

Cable designa-tion	Article number	Length [m]	Cable loss [dB]	Bending radius [mm]
Antenna cable	6GT2815-0BH10	1	0.5	51
Antenna cable	6GT2815-0BH30	3	1	51
Antenna cable (suitable for drag chains)	6GT2815-2BH50	5	1.5	45 [1) 2)]
Antenna cable	6GT2815-1BN10	10	2	77

Cable designa-tion	Article number	Length [m]	Cable loss [dB]	Bending radius [mm]
Antenna cable	6GT2815-0BN10	10	4	51
Antenna cable (suitable for drag chains)	6GT2815-2BN15	15	4	45 [1) 2)]
Antenna cable	6GT2815-0BN20	20	4	77
Antenna cable	6GT2815-0BN40	40	5	77

1) Permissible minimum bending radius with one-time bending. 28 mm

2) With cables capable of being used in drag chains, 100,000 bending cycles at a bending radius of 100 mm and a bend of ± 180° or 3 million torsion cycles with a bend of ± 180° on a cable length of 1 m are permitted.

6.7.5 Antenna parameter assignment

Depending on the country or region in which the antenna is being operated, it is subject to regional limitations with respect to the radiated power.

Limitations in the EU, EFTA, or Turkey

Note

Limitation of the radiated power according to EN 302 208 V1.4.1 (ETSI)

RF600 systems that are put into operation in the EU, EFTA or Turkey must not exceed the following radiated power with an RF660A antenna:

- 2000 mW ERP (or 33 dBm ERP)

  Converted into EIRP: 3250 mW EIRP (or 35 dBm EIRP)

Make the following settings to ensure that the maximum permitted radiated power of the antenna is not exceeded:

- Antenna gain: 7 dBi (10 dBic)
- Radiated power: ≤ 2000 mW ERP (or 33 dBm ERP)

  Converted into EIRP: ≤ 3250 mW EIRP (or 35 dBm EIRP)
- Use of cable loss associated with the antenna cable.

Limitations in the USA and Canada

Note

Limitation of the radiated power (FCC)

RF600 systems that are put into operation in the USA and Canada must not exceed the following radiated power with an RF660A antenna:

- 4000 mW EIRP (or 36 dBm EIRP)

Make the following settings to ensure that the maximum permitted radiated power of the antenna is not exceeded:

- Conducted power P (dBm) of the RF600 reader: < 30 dBm
- Antenna gain G_i (dBi) in the FCC frequency band: ≤ 6 dBi
- Cable loss a_k (dB): ≥ 1 dB

$P\ (dBm) \leq 30\ dBm - (G_i - 6\ dBi) + a_k$

Limitations in China

Note

Limitation of the radiated power (CMIIT)

RF600 systems that are put into operation in China must not exceed the following radiated power with an RF660A antenna:

- 2000 mW ERP (or 33 dBm ERP)

  Converted into EIRP: 3250 mW EIRP (or 35 dBm EIRP)

Make the following settings to ensure that the maximum permitted radiated power of the antenna is not exceeded:

- Antenna gain: 6 dBi (9 dBic)
- Radiated power: ≤ 2000 mW ERP (or 33 dBm ERP)

  Converted into EIRP: ≤ 3250 mW EIRP (or 35 dBm EIRP)
- Use of cable loss associated with the antenna cable.

Limitations in Japan

Note

Limitation of the radiated power (ARIB STD-T106)

RF600 systems that are put into operation in Japan must not exceed the following radiated power with an RF660A antenna:

- 500 mW EIRP (or 27 dBm EIRP) for operation with RF650R (ARIB STD-T107)
- 4000 mW EIRP (or 36 dBm EIRP) for operation with RF680R/RF685R (ARIB STD-T106)

6.7.6 Antenna patterns

Spatial directional radiation pattern

The following schematic diagram shows the main and auxiliary fields of the RF660A antenna in free space in the absence of reflecting/absorbing materials. Please note that the diagram is not to scale.

The recommended working range lies within the main field that is shown in green.

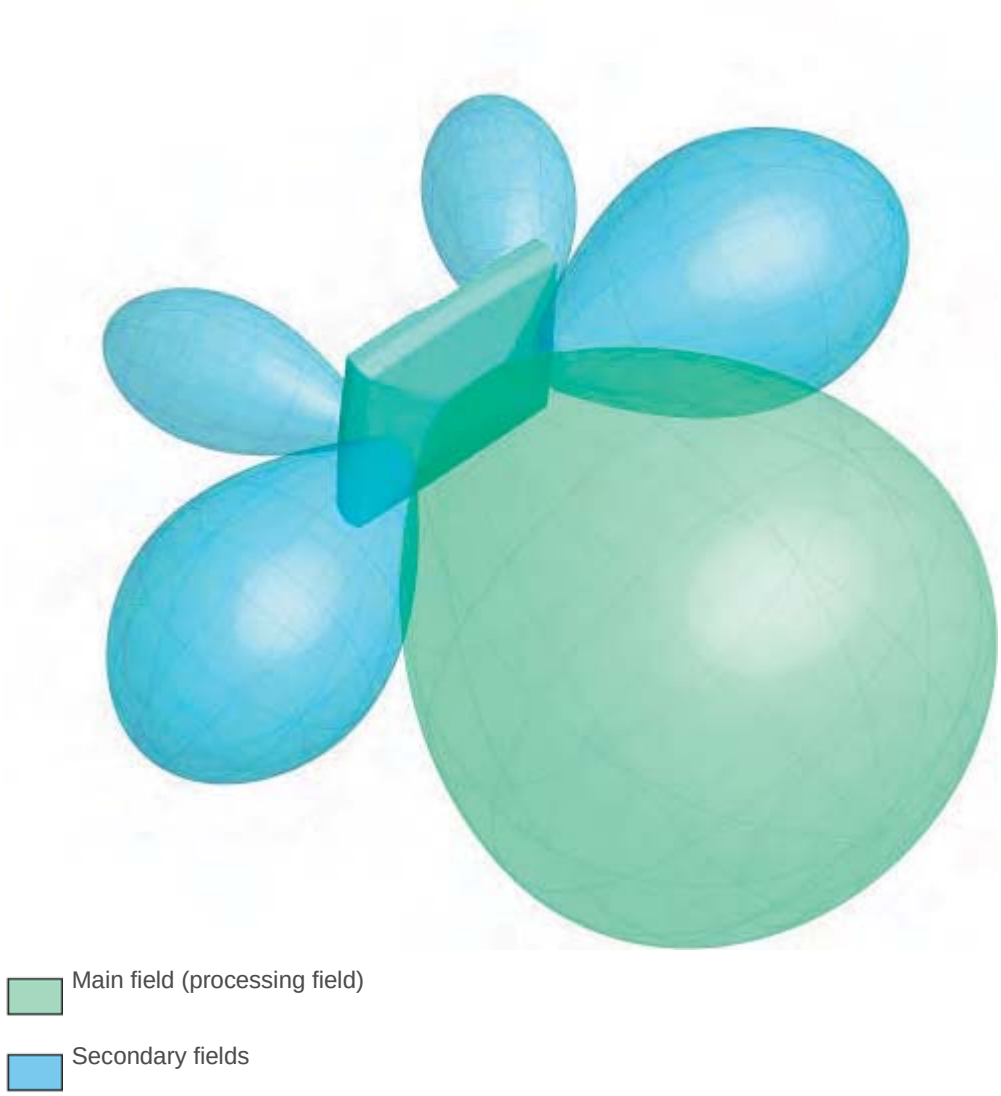

Figure 6-48 Main and auxiliary fields of the RF660A antenna

Radiation diagram (horizontal)

Europe (ETSI)

The radiation diagram is shown for horizontal alignment and for a center frequency of 865 MHz. Horizontal antenna alignment is provided when the TNC connection on the antenna points vertically up or down.

The radiating/receiving angle of the antenna is defined by the angle between the two -3 dB points (corresponding to half the power referred to the maximum performance at a 0° angle).

The optimum radiating/receiving angle is therefore approximately ±30 degrees.

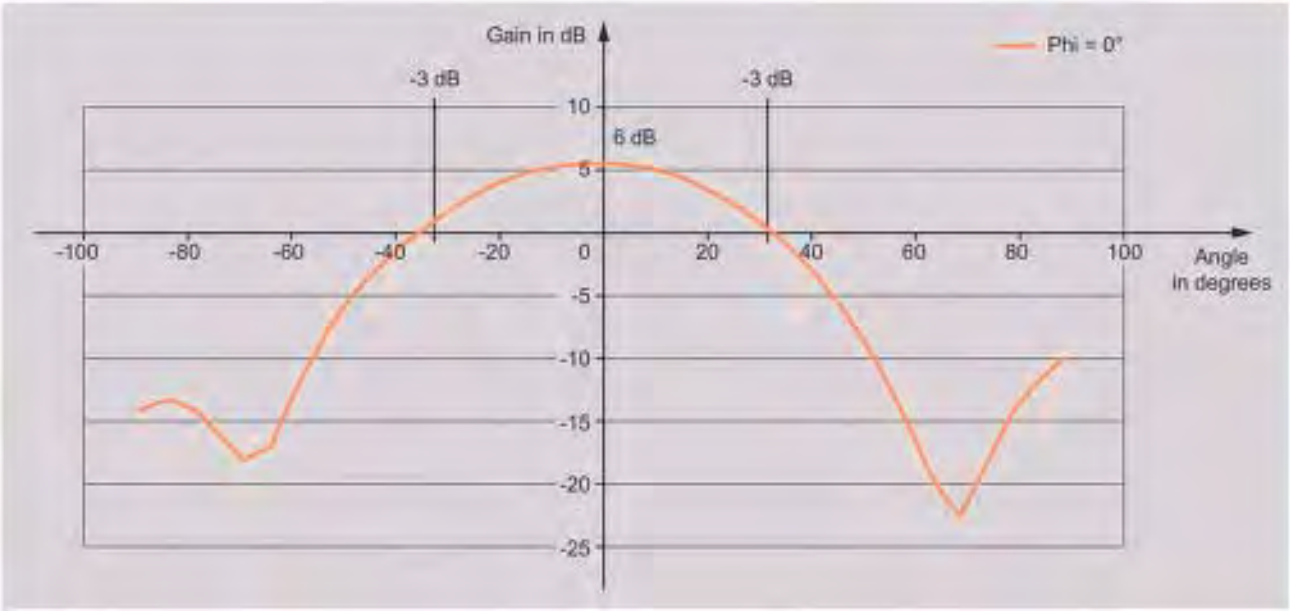

Figure 6-49 Directional radiation pattern of the antenna (at 865 MHz, horizontal alignment)

USA (FCC)

The radiation diagram is shown for horizontal alignment and for a center frequency of 915 MHz.

The radiating/receiving angle of the antenna is defined by the angle between the two -3 dB points (corresponding to half the power referred to the maximum performance at a 0° angle).

The optimum radiating/receiving angle is therefore approximately ±35 degrees.

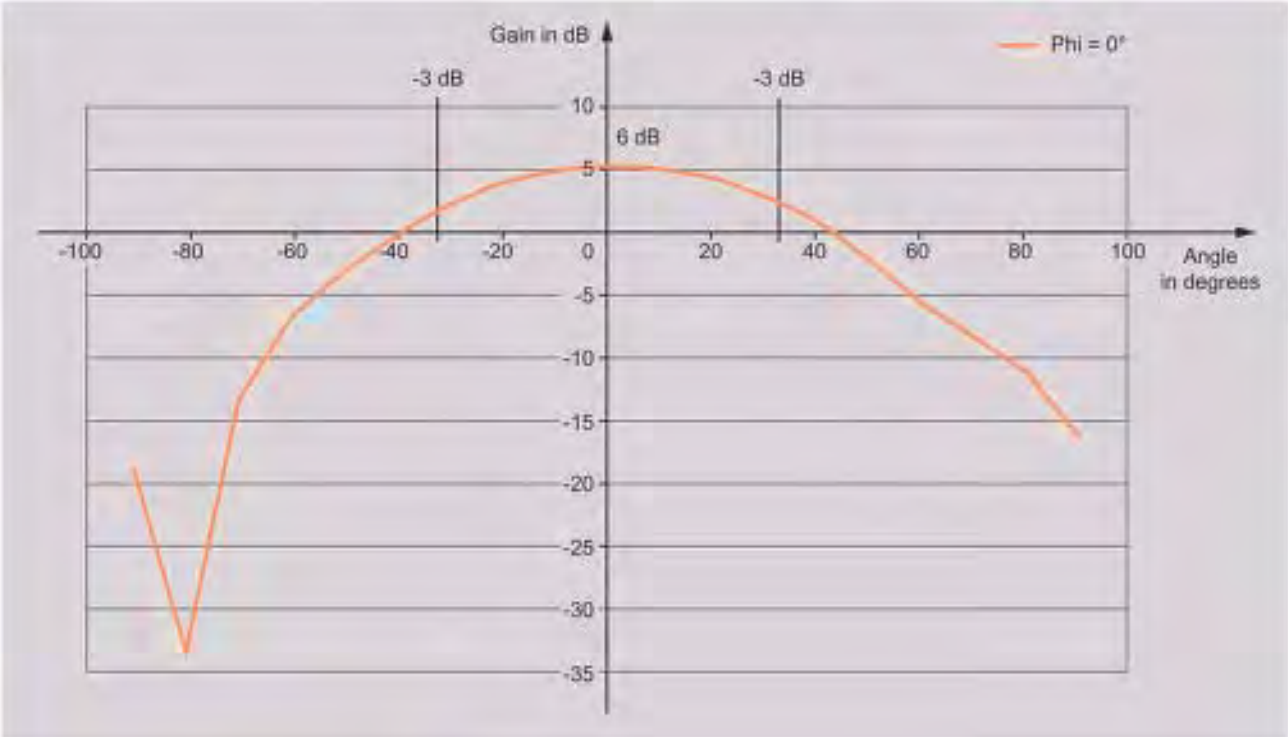

Figure 6-50 Directional radiation pattern of the antenna (at 915 MHz, horizontal alignment)

6.7.7 Technical data

Table 6- 38 Technical specifications for the RF660A antenna

	6GT2812-0AA0x
Product type designation	SIMATIC RF660A
Radio frequencies	
Operating frequency	
• ETSI	• 865 to 868 MHz
• FCC	• 902 to 928 MHz
Maximum radiated power	
• ETSI	• RF650R: ≤ 2000 mW ERP RF680R/RF685R: ≤ 2000 mW ERP
• FCC	• RF650R: ≤ 4000 mW EIRP RF680R/RF685R: ≤ 4000 mW EIRP
• CMIIT	• RF650R: ≤ 2000 mW ERP RF680R/RF685R: ≤ 2000 mW ERP
• ARIB	• STD-T107: RF650R: ≤ 500 mW EIRP • STD-T106: RF680R/RF685R: < 4000 mW EIRP
Antenna gain	
• ETSI	• 5 ... 7 dBi (8 ... 10 dBic)
• FCC	• 6 dBi (9 dBic)
Opening angle for sending/receiving when mounted on a metal surface of 15 cm x 15 cm [1)]	
• ETSI	• Horizontal plane: 55° Vertical plane: 60° see section "Antenna patterns (Page 331)"
• FCC	• Horizontal plane: 60° Vertical plane: 75° see section "Antenna patterns (Page 331)"
Front-to-back ratio	
• ETSI	• 10 dB ± 2 dB
• FCC	• 15 dB ± 2 dB

	6GT2812-0AA0x
Electrical data	
Range	See section "Maximum read/write ranges of transponders (Page 59)"
Impedance	50 Ω
Polarization	Circular
VSWR (standing wave ratio)	≤ 2
Power	≤ 2 W
Interfaces	
Plug connection	RP-TNC coupling (for connection of the antenna cable)
Mechanical specifications	
Material	PA 12
Color	Pastel turquoise
Tightening torque (at room temperature)	≤ 2 Nm
Permitted ambient conditions	
Ambient temperature	
• During operation	• -25 ... +75 °C
• During transportation and storage	• -40 ... +85 °C
Degree of protection	IP67
Shock resistant to EN 60068-2-27	25.5 g [2]
Vibrations according to EN 60068-2-6	1 g [2]
Design, dimensions and weight	
Dimensions (H x W x D)	313 x 313 x 80 mm
Weight	1.6 kg
Standards, specifications, approvals	
Proof of suitability	CE (ETSI EN 302208), FCC (Title 47, Part 15.247), cULus
MTBF	228310 years

[1] The values differ for different dimensions/materials of the mounting surface.

[2] The values for shock and vibration are maximum values and must not be applied continuously.

6.7.8 Dimension drawing

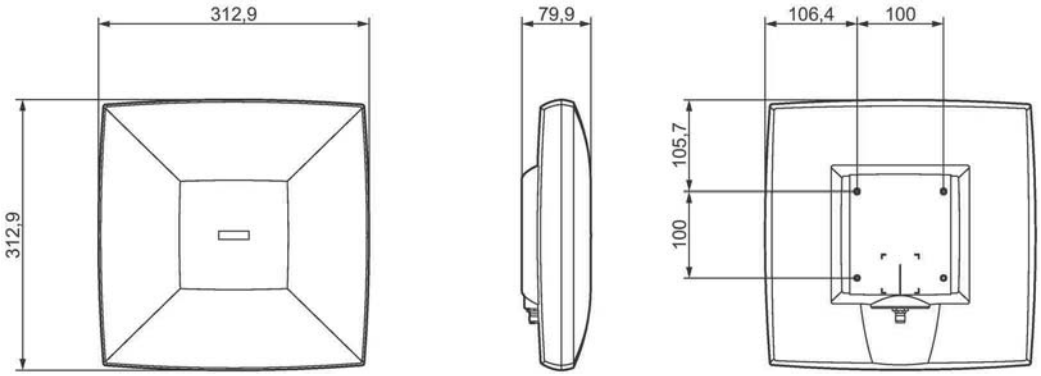

Figure 6-51 Dimension drawing RF660A

All dimensions in mm (± 0.5 mm tolerance)

6.7.9 Approvals & certificates

Table 6- 39 6GT2812-0AA00

Labeling	Description
CE	Conformity with the RED directive 2014/53/EU Conformity with the RoHS directive 2011/65/EU

Table 6- 40 6GT2812-0AA01

Labeling	Description
FC Federal Communications Commission	FCC CFR 47, Part 15 sections 15.247 Radio Frequency Interference Statement This equipment has been tested and found to comply with the limits for a Class B digital device, pursuant to Part 15 of the FCC Rules. The FCC approval is granted in association with the FCC approval of the following RF600 readers: • FCC ID: NXW-RF600R2 (for RF650R: 6GT2811-6AB20-1AA0, RF680R: 6GT2811-6AA10-1AA0, RF685R: 6GT2811-6CA10-1AA0)
Industry Canada Radio Standards Specifications	RSS-210 Issue 7, June 2007, Sections 2.2, A8 The approval for Industry Canada is granted in association with the Industry Canada approval of the following RF600 readers: • IC: 267X-RF600R2, Model RF650R (for 6GT2811-6AB20-1AA0) • IC: 267X-RF600R2, Model RF680R (for 6GT2811-6AA10-1AA0) • IC: 267X-RF600R2, Model RF685R (for 6GT2811-6CA10-1AA0)
UL C US	This product is UL-certified for the USA and Canada. It meets the following safety standard(s): • UL 60950-1 - Information Technology Equipment Safety - Part 1: General Requirements • CSA C22.2 No. 60950 -1 - Safety of Information Technology Equipment • UL Report E 205089

6.8 SIMATIC RF680A

NOTICE
Note on release The use of the adaptive antenna SIMATIC RF680A with the readers RF650R, RF680R and RF685R as of version V2.2.0 (supplied as of 03/2016) is possible. You will find the version on the type plate of the device.

6.8.1 Characteristics

SIMATIC RF680A	Characteristics	
	Area of application	The SIMATIC RF680A is an adaptive UHF antenna in a medium size with high range for industrial applications in production and logistics.
	Frequency range	865 to 928 MHz
	Read range	Max. 8 m
	Polarization	Selectable (circular, linear horizontal, linear vertical)
	Degree of protection	IP65
	Mounting	4 x M4 (VESA 100 fixing system)
	Connector	The antenna is connected directly to the housing with an RP-TNC coupling ①.
	Status display	1 LED ②

Frequency ranges

The antenna is a broadband antenna and covers the frequency ranges from 865 to 928 MHz.

Function

The SIMATIC RF680A is used for transmitting and receiving data in the UHF range. The antennas are connected to the SIMATIC RF600 readers via antenna cables that are available in different lengths.

LED status display

The operating statuses of the antenna are displayed by an LED status display. The LED can adopt the colors green, red or yellow and the statuses off, on, flashing:

Table 6- 41 Display of operating statuses of the antenna

LED	Meaning
	LED static for 1 second when the reader starts up: The device is ready for operation and the connection to the reader is established; operational staus.
	The device is ready for operation but currently inactive.
	The device is active but there is no transponder in the antenna field.
	The device is active and there is at least one transponder in the antenna field.
	Identification of the antenna by the reader function "buzz test".
	There is an error or antenna firmware update is being made.

Indication of the quality of the antenna alignment (RSSI)

When aligning the antenna using the WBM, the three-color LED status display indicates the RSSI value with which the transponder was detected:

- Red: Low RSSI value
- Yellow: Medium RSSI value
- Green: High RSSI value

6.8.2 Ordering data

Table 6- 42 Ordering data RF680A

Product	Article number
SIMATIC RF680A	6GT2812-2GB08

Table 6- 43 Ordering data accessories

Product		Article number
Connecting cable between reader and antenna	1 m (cable loss 0.5 dB)	6GT2815-0BH10
	3 m (cable loss 1.0 dB)	6GT2815-0BH30
	5 m, suitable for drag chains (cable loss 1.5 dB)	6GT2815-2BH50
	10 m (cable loss 2.0 dB)	6GT2815-1BN10
	10 m (cable loss 4.0 dB)	6GT2815-0BN10
	15 m, suitable for drag chains (cable loss 4.0 dB)	6GT2815-2BN15
	20 m (cable loss 4.0 dB)	6GT2815-0BN20
	40 m (cable loss 5.0 dB)	6GT2815-0BN40
SIMATIC antenna holder for RF600 devices		6GT2890-2AB10
Antenna mounting kit		6GT2890-0AA00

6.8.3 Installation

Mounting system

A standardized VESA 100 mounting system is provided to mount the antenna. The mounting system consists of four fixing holes for M4 screws at intervals of 100 mm. The antenna is suitable for mounting on metallic and non-metallic surfaces.

Note

Achieving optimum wave propagation

To achieve optimum wave propagation, the antenna should not be surrounded by conducting objects. The area between antenna and transponder should also allow wave propagation without interference.

Antenna holders

The Siemens antenna holders allow for fine adjustment of the antenna field by setting the solid angle.

6.8.4 Connecting the antenna

The SIMATIC RF680A antenna must be connected to the reader using an antenna cable. Preassembled standard cables in lengths of 1 m, 3 m, 5 m, 10 m, 15 m, 20 m and 40 m are available to connect the antenna.

NOTICE
Connecting the antenna Do not connect the adaptive antenna RF680A during operation. Only connect the antenna to a reader that has been switched off and then restart the reader.

The range of the antenna is limited by the cable loss. The maximum range can be achieved with the cable 6GT2815-0BH10 (length 1 m), since this cable has the lowest cable loss.

Requirement

Note

Use of Siemens antenna cables

To ensure optimum functioning of the antenna, it is recommended that a Siemens antenna cable be used in accordance with the list of accessories.

Strain relief

To protect the antenna from strain, you can attach strain relief, e.g. in the form of a strain relief clamp. The following graphic shows the optimum mounting point for attaching strain relief.

① RF600 antenna cable
② Mounting point for strain relief

Figure 6-52 Strain relief

6.8.4.1 Bending radii and bending cycles of the cable

The following listed bending radii are minimum values, which may not be fallen below and are based on repeated bending.

Table 6- 44 Bending radii of the antenna cable

Cable designa-tion	Article number	Length [m]	Cable loss [dB]	Bending radius [mm]
Antenna cable	6GT2815-0BH10	1	0.5	51
Antenna cable	6GT2815-0BH30	3	1	51
Antenna cable (suitable for drag chains)	6GT2815-2BH50	5	1.5	45 [1) 2)]
Antenna cable	6GT2815-1BN10	10	2	77
Antenna cable	6GT2815-0BN10	10	4	51
Antenna cable (suitable for drag chains)	6GT2815-2BN15	15	4	45 [1) 2)]

Cable designa-tion	Article number	Length [m]	Cable loss [dB]	Bending radius [mm]
Antenna cable	6GT2815-0BN20	20	4	77
Antenna cable	6GT2815-0BN40	40	5	77

1) Permissible minimum bending radius with one-time bending. 28 mm

2) With cables capable of being used in drag chains, 100,000 bending cycles at a bending radius of 100 mm and a bend of ± 180° or 3 million torsion cycles with a bend of ± 180° on a cable length of 1 m are permitted.

6.8.5 Antenna parameter assignment

Depending on the country or region in which the antenna is being operated, it is subject to regional limitations with respect to the radiated power.

Limitations in the EU, EFTA, or Turkey

Note

Limitation of the radiated power according to EN 302 208 V1.4.1 (ETSI)

RF600 systems that are put into operation in the EU, EFTA or Turkey must not exceed the following radiated power with an RF680A antenna:

- 2000 mW ERP (or 33 dBm ERP)

  Converted into EIRP: 3250 mW EIRP (or 35 dBm EIRP)

Make the following settings to ensure that the maximum permitted radiated power of the antenna is not exceeded:

- Antenna gain: 3.5 dBi (6.5 dBic)
- Radiated power: ≤ 2000 mW ERP (or 33 dBm ERP)

  Converted into EIRP: ≤ 3250 mW EIRP (or 35 dBm EIRP)
- Use of cable loss associated with the antenna cable.

Limitations in the USA and Canada

Note

Limitation of the radiated power (FCC)

RF600 systems that are put into operation in the USA and Canada must not exceed the following radiated power with an RF680A antenna:

- 4000 mW EIRP (or 36 dBm EIRP)

Make the following settings to ensure that the maximum permitted radiated power of the antenna is not exceeded:

- Conducted power P (dBm) of the RF600 reader: < 30 dBm
- Antenna gain G_i (dBi) in the FCC frequency band: ≤ 3.5 dBi
- Cable loss a_k (dB): ≥ 1 dB

P (dBm) ≤ 30 dBm - (G_i - 6 dBi) + a_k

Limitations in China

Note

Limitation of the radiated power (CMIIT)

RF600 systems that are put into operation in China must not exceed the following radiated power with an RF680A antenna:

- 2000 mW ERP (or 33 dBm ERP)

  Converted into EIRP: 3250 mW EIRP (or 35 dBm EIRP)

Make the following settings to ensure that the maximum permitted radiated power of the antenna is not exceeded:

- Antenna gain: 3 dBi (6 dBic)
- Radiated power: ≤ 2000 mW ERP (or 33 dBm ERP)

  Converted into EIRP: ≤ 3250 mW EIRP (or 35 dBm EIRP)
- Use of cable loss associated with the antenna cable.

Limitations in Japan

Note

Limitation of the radiated power (ARIB)

RF600 systems that are put into operation in Japan must not exceed the following radiated power with an RF680A antenna:

- 500 mW EIRP (or 27 dBm EIRP) for operation with RF650R (ARIB STD-T107)
- 4000 mW EIRP (or 36 dBm EIRP) for operation with RF680R/RF685R (ARIB STD-T106)

6.8.6 Antenna patterns

Transponder alignment

The antenna RF680A has an adjustable antenna (circular or linear horizontal or linear vertical). With a circular antenna the alignment of the antenna axis of symmetry changes between horizontal and vertical each time it transmits. For this reason, with a circular antenna the alignment of the transponder polarization axis (horizontal/vertical) is unimportant. Make sure, however, that the transponder is aligned with the antenna.

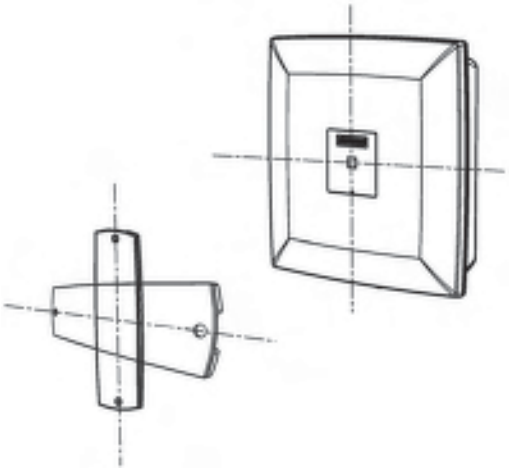

Figure 6-53 Alignment of the transponder polarization axis with a circular antenna axis of symmetry

With a linear vertical or linear horizontal antenna, the alignment of the transponder polarization axis, must correspond to the alignment of the antenna axis of symmetry.

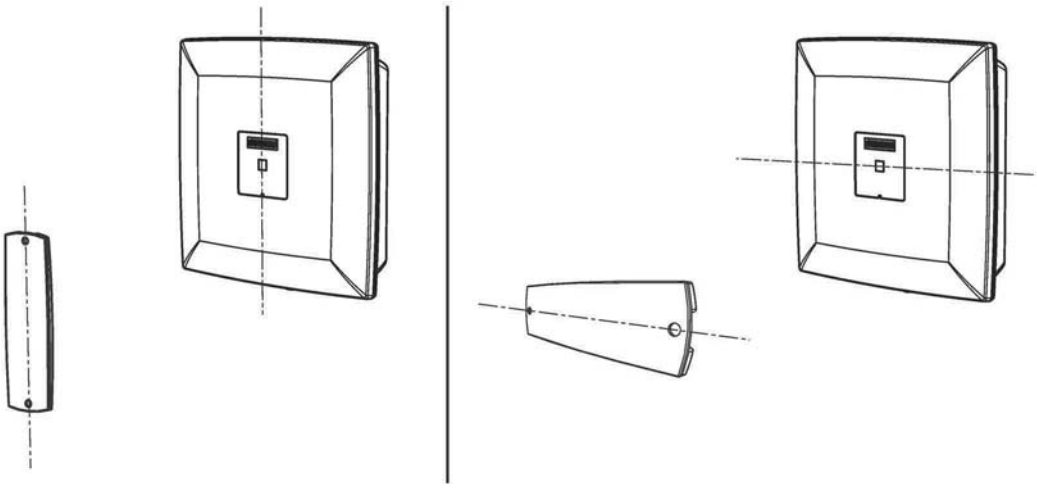

Figure 6-54 Alignment of the transponder polarization axis with a linear vertical or linear horizontal antenna axis of symmetry

6.8.6.1 Antenna patterns in the ETSI frequency band

Directional radiation pattern ETSI

The directional radiation pattern is shown for nominal alignment and a center frequency of 866.3 MHz. The nominal antenna alignment is given when the antenna elevation is provided as shown in the following figure.

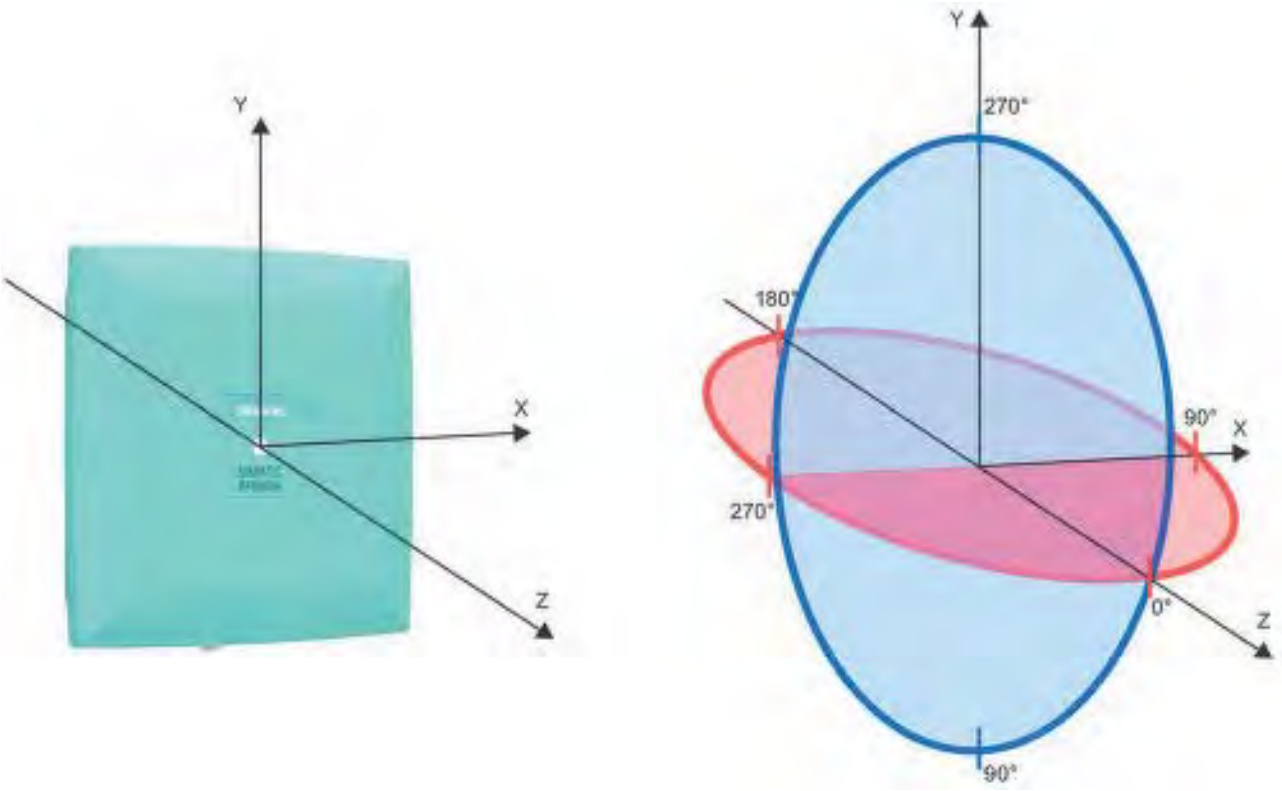

Figure 6-55 Reference system

The half-power beam width of the antenna is defined by the angle between the two -3 dB points. The range (in %) corresponding to the dB values in the patterns can be obtained from this table (Page 354).

Note that the measurements presented graphically below were carried out in a low-reflection environment. Deviations can therefore occur in a normally reflecting environment.

Radiation diagram circular in the ETSI frequency band

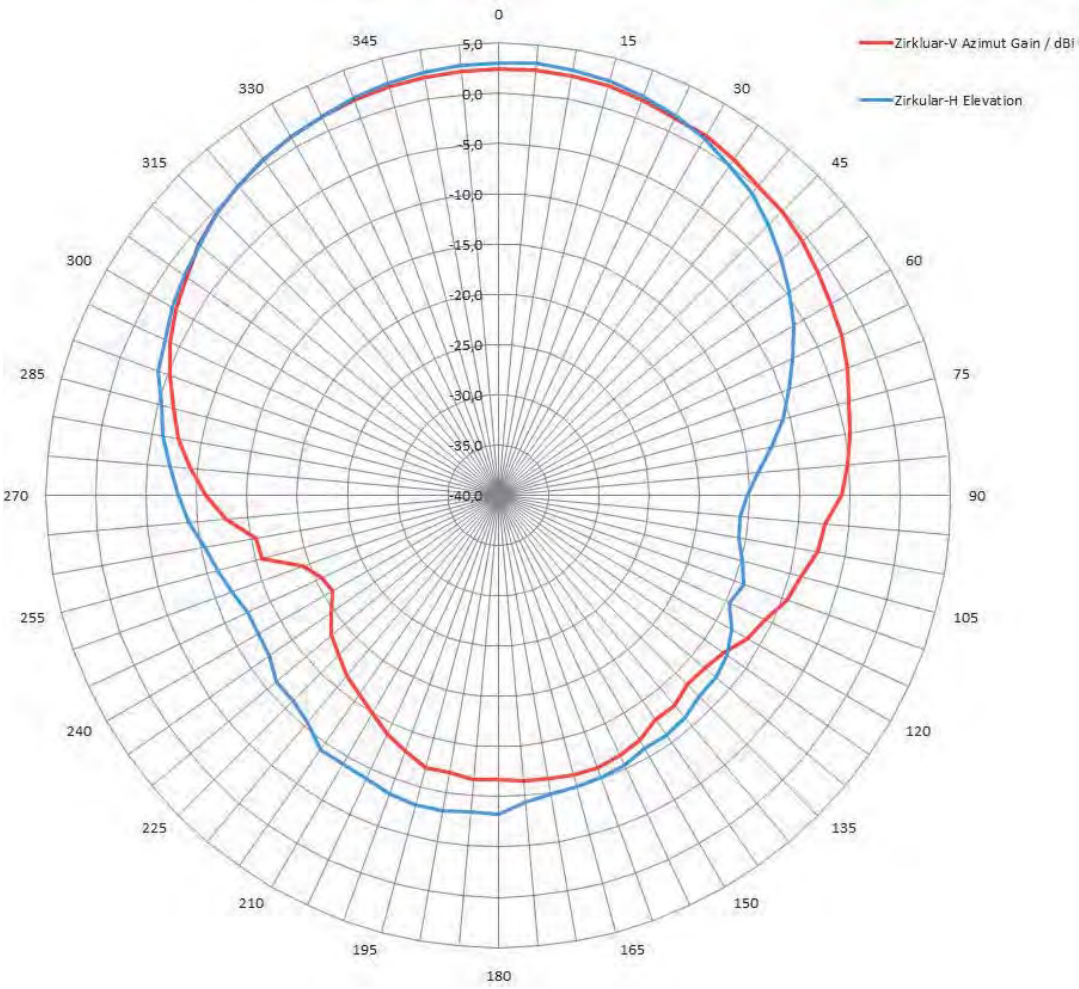

Pattern of the vertical plane of the antenna

Pattern of the horizontal plane of the antenna

Figure 6-56 Directional radiation pattern of RF680A in the ETSI frequency band

Radiation diagram (linear horizontal) in the ETSI frequency band

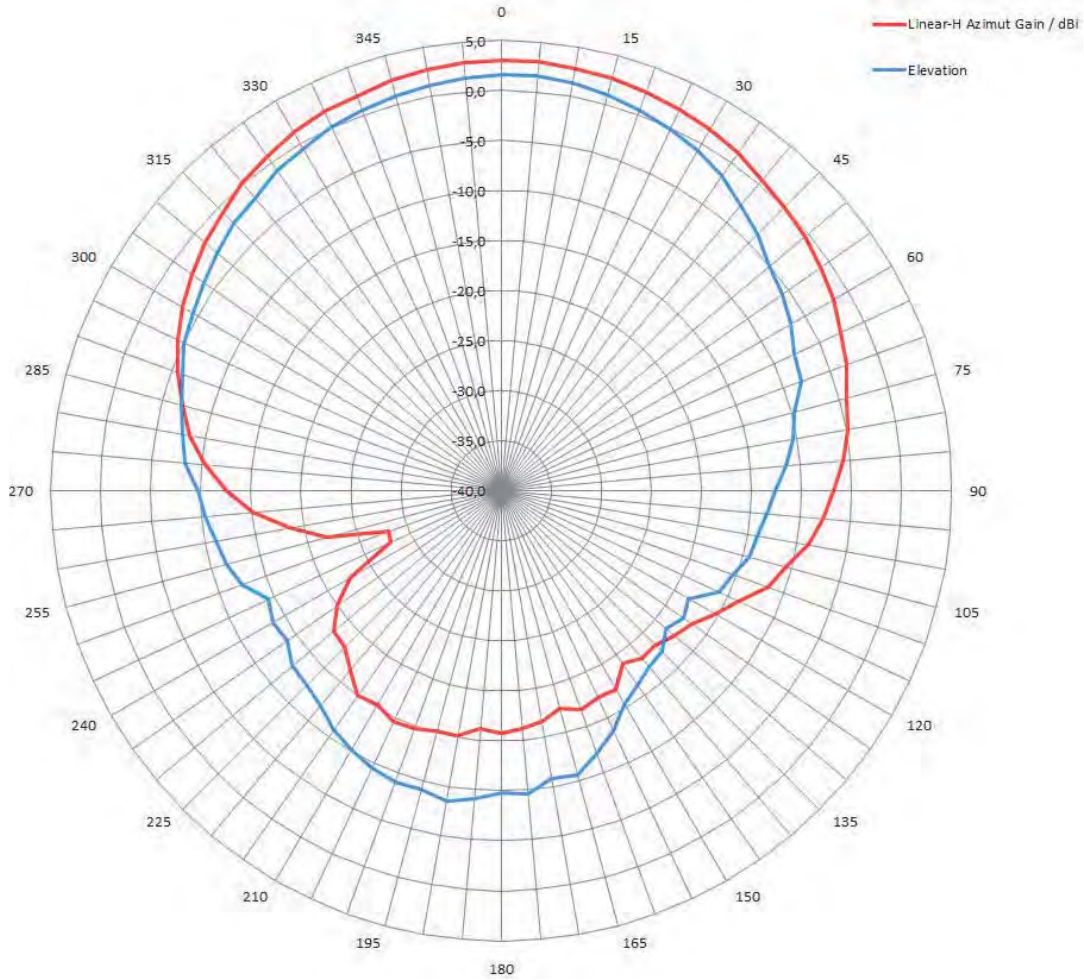

Pattern of the vertical plane of the antenna

Pattern of the horizontal plane of the antenna

Figure 6-57 The RF680A directional radiation pattern in the ETSI frequency band, axis of symmetry of the antenna, and polarization axis of the transponder are aligned horizontally

Radiation diagram (linear vertical) in the ETSI frequency band

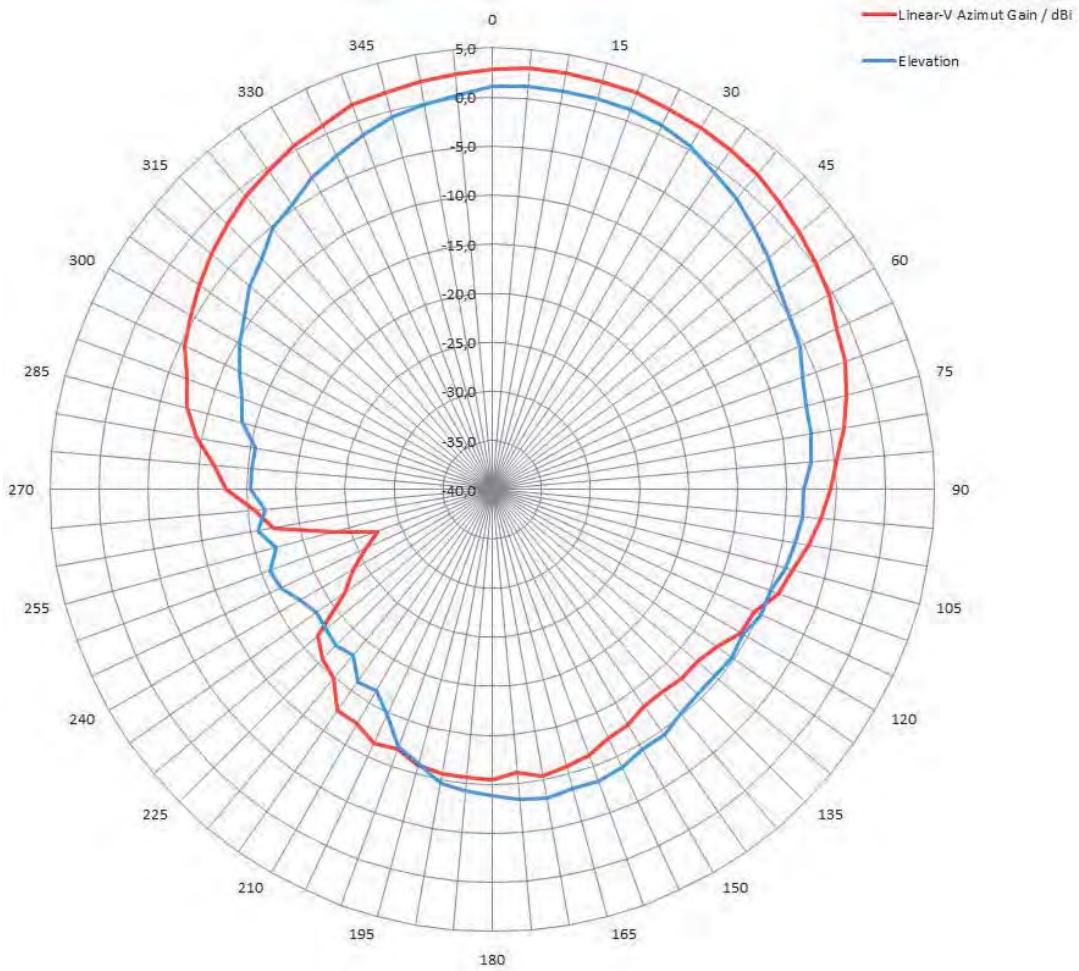

Pattern of the vertical plane of the antenna

Pattern of the horizontal plane of the antenna

Figure 6-58 The RF680A directional radiation pattern in the ETSI frequency band, axis of symmetry of the antenna, and polarization axis of the transponder are aligned vertically

6.8.6.2 Antenna patterns in the FCC frequency band

Directional radiation pattern FCC

The directional radiation pattern is shown for nominal alignment and a center frequency of 915 MHz.

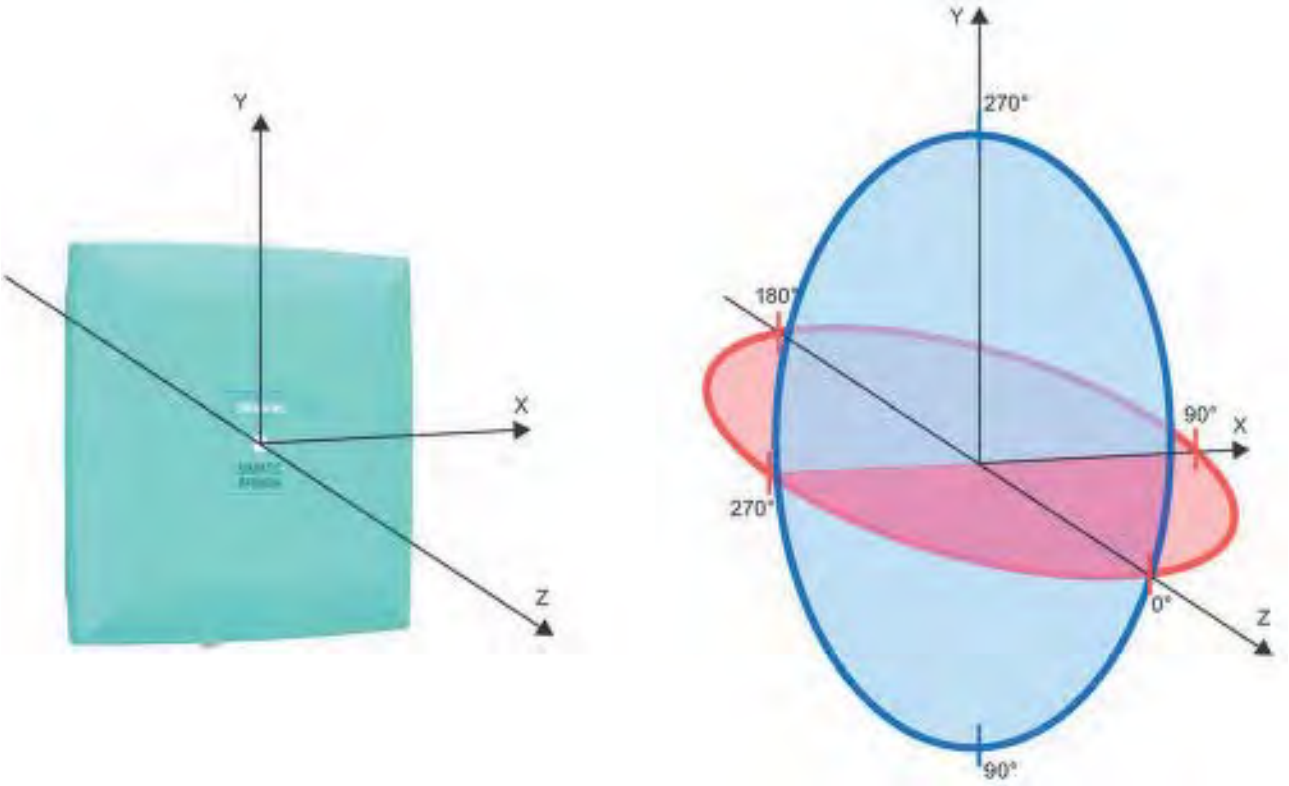

Figure 6-59 Reference system

The half-power beam width of the antenna is defined by the angle between the two -3 dB points (corresponding to half the power in relation to the maximum power). Which range (in %) corresponds to the dB values in the patterns can be obtained from this table (Page 354).

Note that the measurements presented graphically below were carried out in a low-reflection environment. Deviations can therefore occur in a normally reflecting environment.

Radiation diagram circular in the FCC frequency band

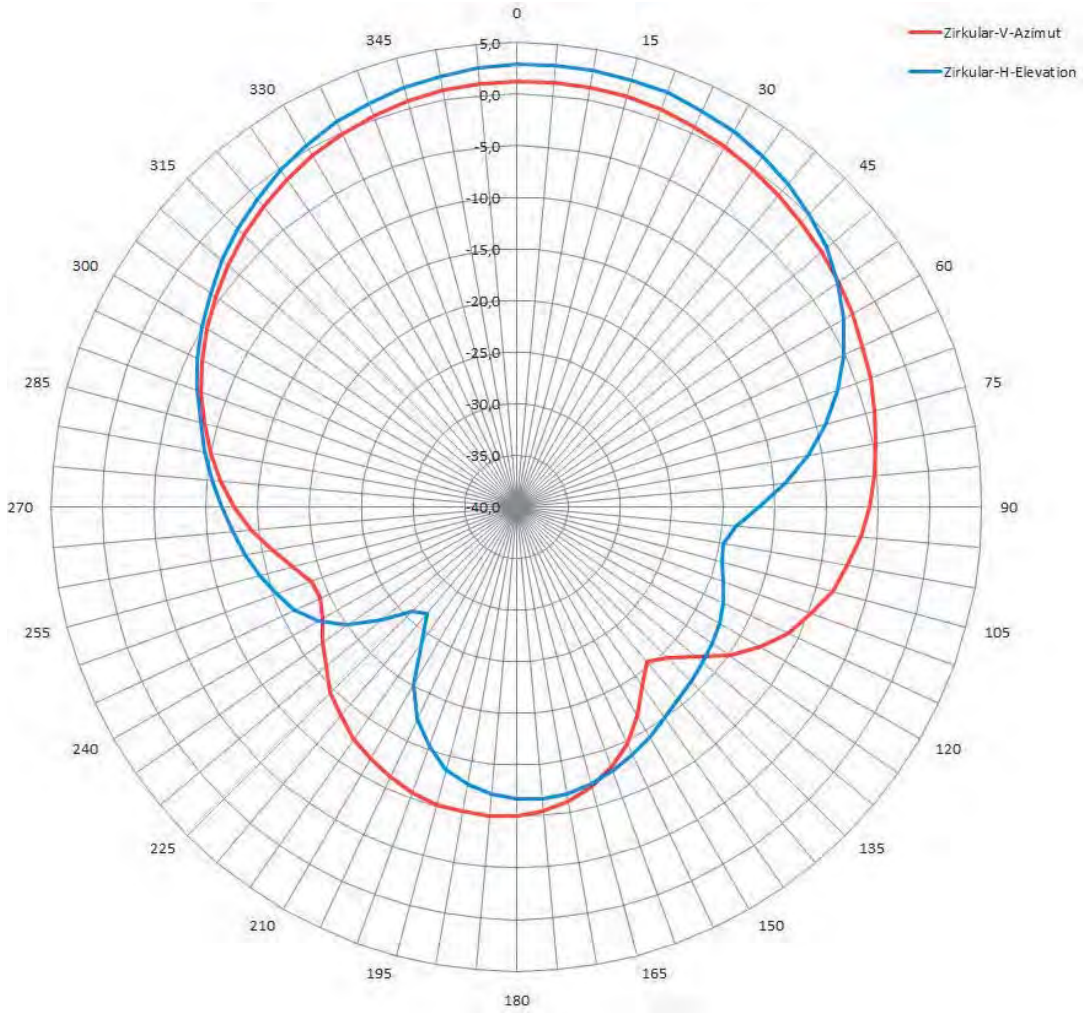

Pattern of the vertical plane of the antenna

Pattern of the horizontal plane of the antenna

Figure 6-60 Directional radiation pattern of the RF680A in the FCC frequency band

Radiation diagram (linear horizontal) in the FCC frequency band

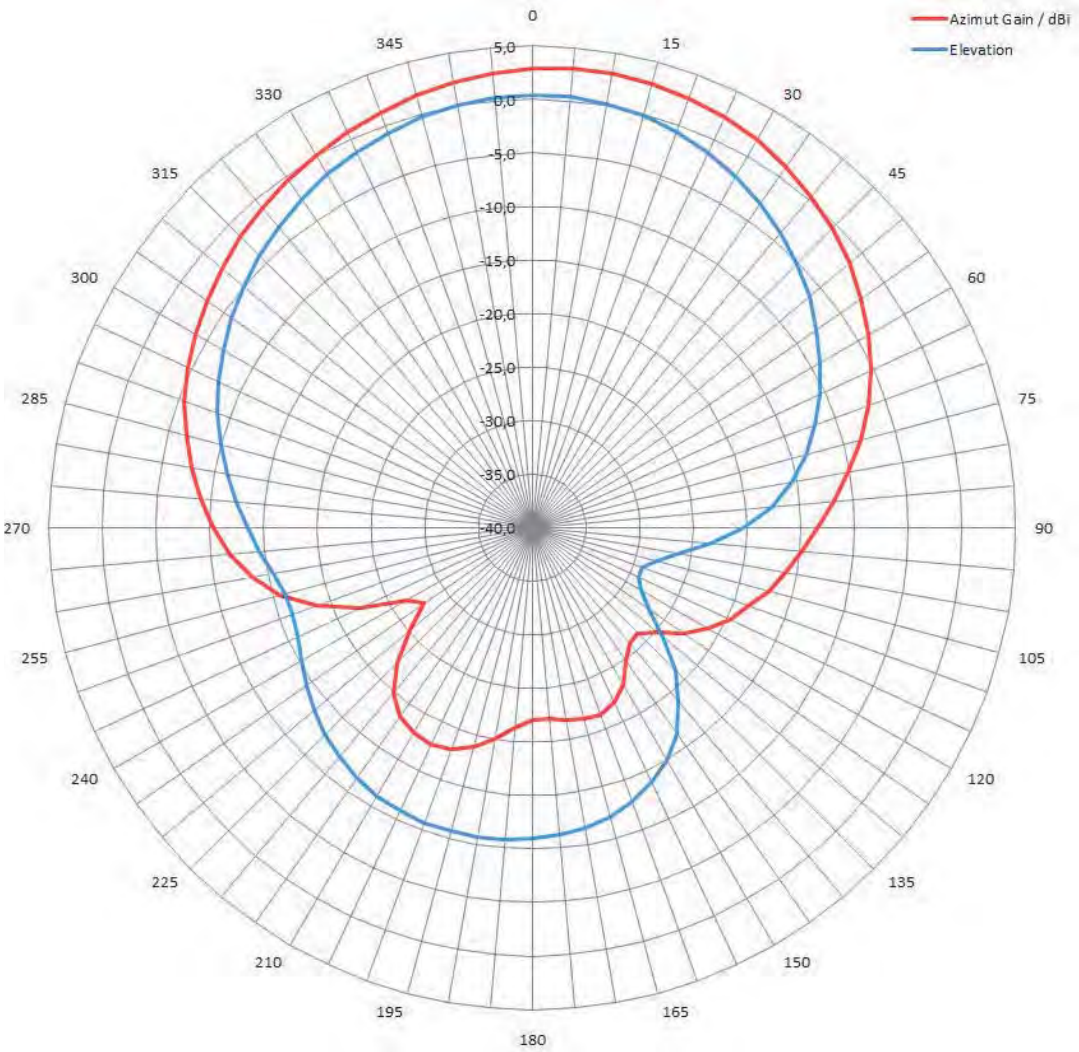

Pattern of the vertical plane of the antenna

Pattern of the horizontal plane of the antenna

Figure 6-61 The RF680A directional radiation pattern in the FCC frequency band, axis of symmetry of the antenna, and polarization axis of the transponder are aligned horizontally

Radiation diagram (linear vertical) in the FCC frequency band

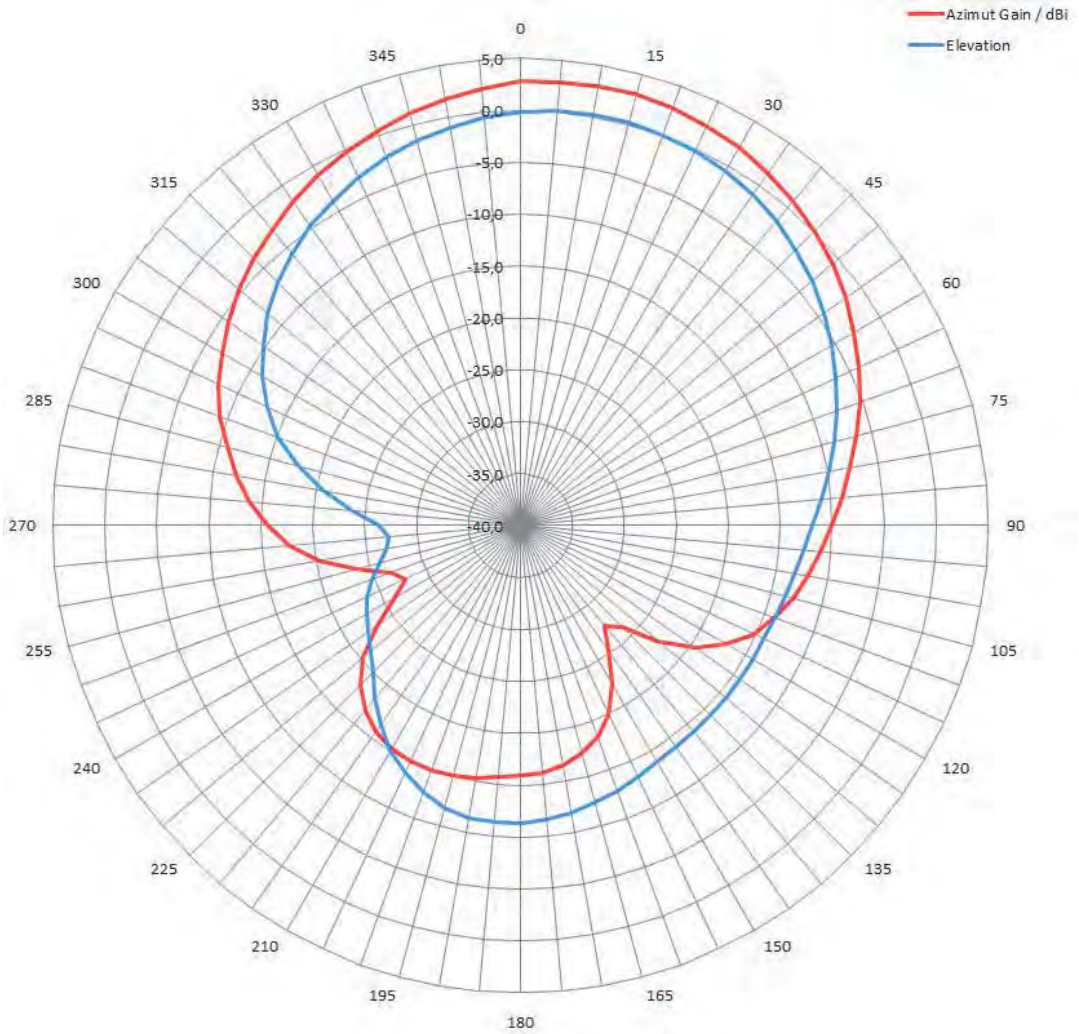

Pattern of the vertical plane of the antenna

Pattern of the horizontal plane of the antenna

Figure 6-62 The RF680A directional radiation pattern in the FCC frequency band, axis of symmetry of the antenna, and polarization axis of the transponder are aligned vertically

6.8.6.3 Interpretation of directional radiation patterns

The following overview table will help you with the interpretation of directional radiation patterns.

The table shows which dBi values correspond to which read/write ranges (in %): You can read the radiated power depending on the reference angle from the directional radiation patterns, and thus obtain information on the read/write range with this reference angle with regard to a transponder.

The dBr values correspond to the difference between the maximum dBi/dBic value and a second dBi/dBic value.

Table 6- 45 Interpretation of directional radiation patterns

Deviation from maximum antenna gain [dBr]	Read/write range [%]
0	100
-3	70
-6	50
-9	35
-12	25
-15	18
-18	13

Example

As can be seen in "Antenna patterns in the ETSI frequency band (Page 346)" the maximum antenna gain in the vertical plane is 3.45 dBi (6.45 dBic). In this plane, and with the polarization axis of the transponder parallel to the axis of symmetry of the antenna, the antenna gain drops to about 0.5 dBic at +50° or 310°. This means that the dBr value is -6. The antenna range is only +50% of the maximum range at + 50° or 310° from the Z axis within the vertical plane (see values shown in blue in the directional radiation pattern: Characteristic of the vertical plane of the antenna (Page 346)and the associated representation of the reference system (Page 346)).

6.8.7 Technical data

Table 6- 46 Technical specifications for the RF680A antenna

	6GT2812-2GB08
Product type designation	SIMATIC RF680A
Radio frequencies	
Operating frequency	865 to 928 MHz
Maximum radiated power	
• ETSI	• RF650R: ≤ 1220 mW ERP RF680R/RF685R: ≤ 2000 mW ERP
• FCC	• RF650R: ≤ 2000 mW EIRP RF680R/RF685R: ≤ 4000 mW EIRP
• CMIIT	• RF650R: ≤ 1220 mW ERP RF680R/RF685R: ≤ 2000 mW ERP
• ARIB	• STD-T107: RF650R: ≤ 500 mW EIRP • STD-T106: RF680R/RF685R: < 4000 mW EIRP
Antenna gain	
• ETSI	• 3.5 dBi (6.5 dBic)
• FCC	• 3.5 dBi (6.5 dBic)
Opening angle for sending/receiving when mounted on a metal surface of 15 cm x 15 cm [1)]	
• ETSI	• Horizontal plane: 87° Vertical plane: 80° see section "Antenna patterns in the ETSI frequency band (Page 346)"
• FCC	• Horizontal plane: 90° Vertical plane: 77° see section "Antenna patterns in the FCC frequency band (Page 350)"
Front-to-back ratio	
• ETSI	• 14 dB ± 4 dB (depends on orientation of the transponder)
• FCC	• 14 dB ± 4 dB (depends on orientation of the transponder)

	6GT2812-2GB08
Electrical data	
Range	See section "Maximum read/write ranges of transponders (Page 59)"
Impedance	50 Ω
Polarization	Linear, circular (can be switched over)
VSWR (standing wave ratio)	≤ 1.45
Power	≤ 2 W
Interfaces	
Plug connection	RP-TNC coupling (for connection of the antenna cable)
Mechanical specifications	
Material	Pocan
Color	Pastel turquoise
Tightening torque (at room temperature)	≤ 2 Nm
Permitted ambient conditions	
Ambient temperature	
• During operation	• -25 ... +75 °C
• During transportation and storage	• -40 ... +85 °C
Degree of protection	IP65
Shock resistant to EN 60068-2-27	30 g [2]
Vibrations according to EN 60068-2-6	10 g [2]
Design, dimensions and weight	
Dimensions (H x W x D)	198 x 198 x 60 mm
Weight	690 g
Status display	1 LED
Standards, specifications, approvals	
Proof of suitability	CE (according to RED), FCC (Title 47, Part 15.247), cULus
MTBF	218 years

[1] The values differ for different dimensions/materials of the mounting surface.

[2] The values for shock and vibration are maximum values and must not be applied continuously.

6.8.8 Dimension drawing

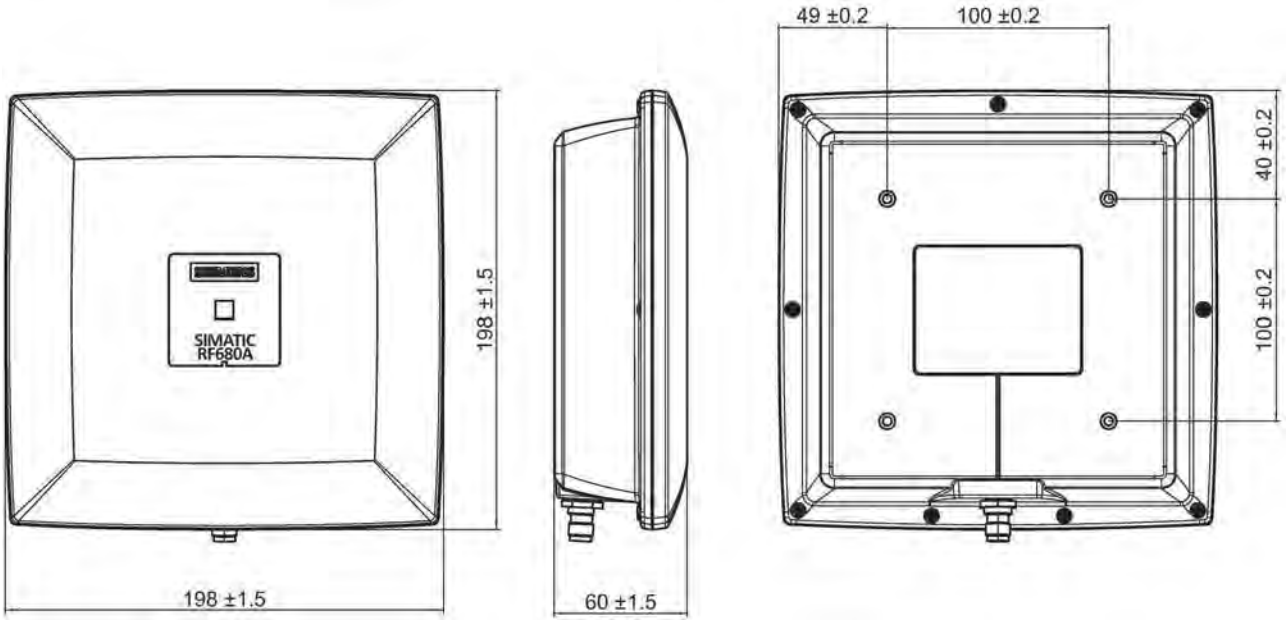

Figure 6-63 Dimension drawing RF680A

All dimensions in mm

6.8.9 Approvals & certificates

Table 6- 47 6GT2812-2GB08

Labeling	Description
CE	Conformity with the RED directive 2014/53/EU Conformity with the RoHS directive 2011/65/EU

Table 6- 48 6GT2812-2GB08

Labeling	Description
FC Federal Communications Commission	FCC CFR 47, Part 15 sections 15.247 Radio Frequency Interference Statement This equipment has been tested and found to comply with the limits for a Class B digital device, pursuant to Part 15 of the FCC Rules. The FCC approval is granted in association with the FCC approval of the following RF600 readers: • FCC ID: NXW-RF600R2 (for RF650R: 6GT2811-6AB20-1AA0, RF680R: 6GT2811-6AA10-1AA0, RF685R: 6GT2811-6CA10-1AA0)
Industry Canada Radio Standards Specifications	RSS-210 Issue 7, June 2007, Sections 2.2, A8 The approval for Industry Canada is granted in association with the Industry Canada approval of the following RF600 readers: • IC: 267X-RF600R2, Model RF650R (for 6GT2811-6AB20-1AA0) • IC: 267X-RF600R2, Model RF680R (for 6GT2811-6AA10-1AA0) • IC: 267X-RF600R2, Model RF685R (for 6GT2811-6CA10-1AA0)
C UL US	This product is UL-certified for the USA and Canada. It meets the following safety standard(s): • UL 60950-1 - Information Technology Equipment Safety - Part 1: General Requirements • CSA C22.2 No. 60950 -1 - Safety of Information Technology Equipment • UL Report E115352
KC	KCC Certification Type of equipment: A급 기기 (업무용 방송통신기자재) Class A Equipment (Industrial Broadcasting & Communication Equipment) 이 기기는 업무용(A급) 전자파적합기기로서 판 매자 또는 사용자는 이 점을 주의하시기 바라 며, 가정외의 지역에서 사용하는 것을 목적으로 합니다. This equipment is Industrial (Class A) electromagnetic wave suitability equipment and seller or user should take notice of it, and this equipment is to be used in the places except for home. Certificate of the antenna: MSIP-REI-S49-RF680A

Transponder

7

7.1 Overview

7.1.1 Mode of operation of transponders

The transponder mainly comprises a microchip with an integrated memory and a dipole antenna.

The principle of operation of a passive RFID transponder is as follows:

- Diversion of some of the high-frequency energy emitted by the reader to supply power to the integrated chip
- Receiving commands from the reader
- Responses are transmitted to the reader antenna by modulating the reflected radio waves (backscatter technique)

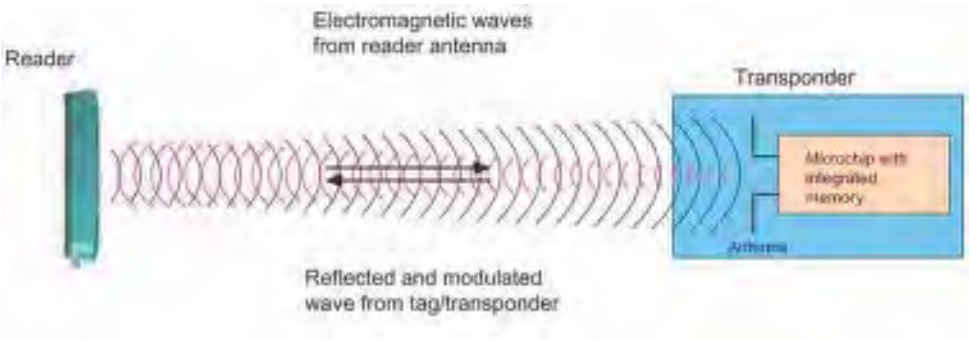

Figure 7-1 Mode of operation of transponders

The transmission ranges achieved vary depending on the size of the transponder and therefore its dipole antenna. In general the following rule applies: The smaller the transponder and therefore the antenna, the shorter the range.

7.1.2 Transponder classes and generations

The transponder classes are distinguished by the different communication protocols used between the reader and transponder. Transponder classes are usually not mutually compatible.

The following transponder classes/protocol types are supported by the RF600 system:

- ISO 18000-62
- ISO 18000-63

Transponders supported

RF600 system supports passive transponders with the following minimum characteristics:

- EPC ID (Electronic Product Code IDentifier)
- TID
- A function which permanently ensures that transponders no longer respond.
- After the lock programming can no longer be reprogrammed.

7.1.3 Electronic Product Code (EPC)

The Electronic Product Code (EPC) supports the unique identification of objects (e.g. retail items, logistical items or transport containers). This makes extremely accurate identification possible. In practical use, the EPC is stored on a transponder and scanned by the reader.

There are different EPC number schemes with different data lengths. Below is the structure of a GID-96-bit code (EPC Global Tag Data Standards V1.1 Rev. 1.27) :

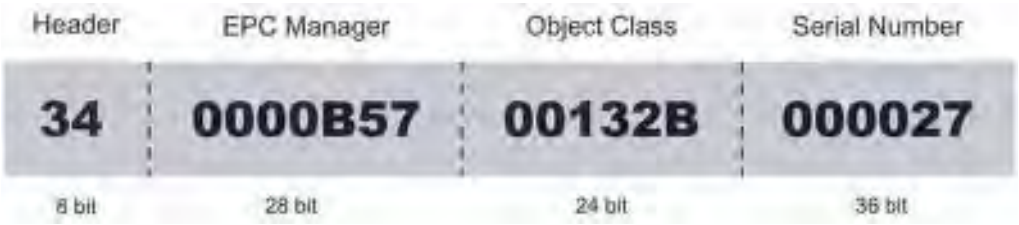

- **Header:** identifies the EPC identification number that follows with regard to length, type, structure and version of the EPC
- **EPC Manager:** identifies the company/corporation
- **Object class**: Corresponds to the article number
- **Serial Number:** consecutive number of the article

The Siemens UHF transponders are all suitable for working with EPC and other number schemes. Before a transponder can work with a number scheme, the relevant numbers must first be written to the transponder.

Presetting of the EPC memory of industrial Siemens transponders RF6xxT

The first 12 bytes of the EPC memory ("0x00 - 0x0B") are preset. As of byte 13 ("0x0C") the EPC memory is not preset.

Table 7- 1 Presetting of the EPC memory

Address UID	Address with FB (UID)	Value
0x00	0xFF00	0x00
...	...	...
0x04	0xFF04	0x00
0x05	0xFF05	Transponder type [1]
0x06	0xFF06	Year produced [1]
0x07	0xFF07	Month produced [1]
0x08	0xFF08	Day produced [1]
0x09	0xFF09	Consecutive number [1]
0x0A	0xFF0A	
0x0B	0xFF0B	

[1] In the following table, these values are described in greater detail.

Note that the RF6xxT transponders cannot be disabled using a kill password.

Table 7- 2 Explanation of the values

Transponder type	Year produced	Month produced	Day produced	Consecutive number [1]		
RF620T = 0x3E	2018 = 0x12	Jan. = 0x01	01 = 0x01	0x00	0x00	0x01
RF625T = 0x8E	2019 = 0x13	Feb. = 0x02	02 = 0x02	0x00	0x00	0x02
RF630T = 0x3F	...	...	...	...	...	...
RF640T = 0x40	...	...	...	...	...	...
RF645T = 0x84	...	...	...	...	...	...
RF680T = 0x44	...	...	...	...	...	...
RF682T = 0x64	...	...	...	...	...	...
	...	Dec. = 0x0C	31 = 0x1F	0xFF	0xFF	0xFF

[1] The consecutive number is counted absolutely as of the respective production date and is therefore unique.

7.1.4 SIMATIC memory configuration of the RF600 transponders and labels

Special memory configuration of the RF600 transponders and smartlabels

Address spaces of the transponder versions

With the RF600 readers, the user data, TID, EPC and passwords are read out via the relevant memory banks. To read out the required data, the relevant memory bank must be selected.

The table above shows the area and length of the user data ("USER" column). You can read out the EPC-ID using an inventory command. As an alternative, you can also read out the EPC-ID using a Read command to memory bank 1, start address 0x04.

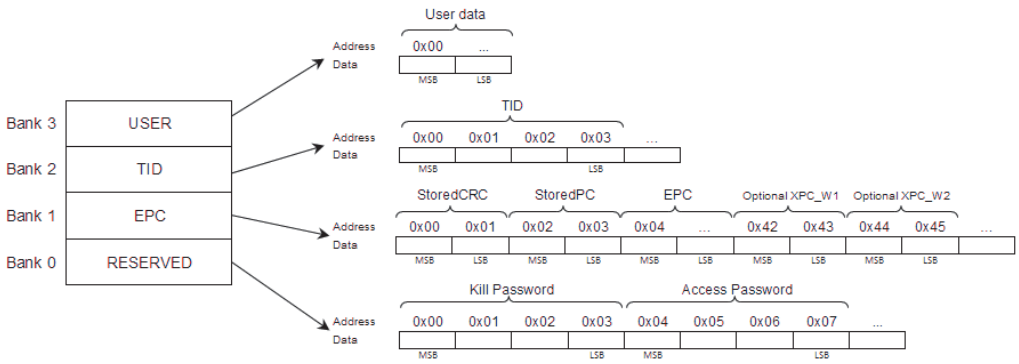

Figure 7-2 Memory configuration

Note

Information on the detailed memory configuration

The memory configuration of the various transponders and smartlabels varies and depends on the chip type used. You will find detailed information of the memory configuration in the data sheets of the chip manufacturer.

Note

Preset EPC ID

The EPC ID of the transponders RF620T to RF680T are preset with a 12 byte long identifier. This identifier is based on a numbering scheme. You will find more information on this in the section "Electronic Product Code (EPC) (Page 360)".

7.1.5 Storage and transportation roll goods

NOTICE
Notes on storage and transportation of rolls Note the following information on the storage and transportation of rolls: • Protect the transponders from direct sunlight and heat (e.g. heating appliances). • Prior to use, store the label rolls in the polyethylene bag or the shrink film of the original packaging. • Store the label rolls in a cool and dry location. Ideal conditions: 18 °C ±5 °C, 40-60 % humidity • Stack several label rolls lying flat and centered one above the other. • Avoid external pressure (e.g. a narrow box).

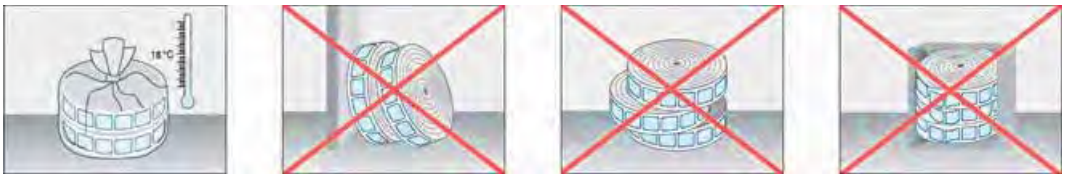

Figure 7-3 Storage of transponders

7.2 SIMATIC RF630L Smartlabel

7.2.1 Features

SIMATIC RF630L smart labels are passive, maintenance-free data carriers based on UHF Class 1 Gen2 technology that are used to store the "Electronic Product Code" (EPC).

Smart labels offer numerous possible uses for a wide range of applications and support efficient logistics throughout the process chain.

Smartlabel SIMATIC RF630L (6GT2810-2AB0x)				
	6GT2810-2AB01-0AX1	6GT2810-2AB02-0AX0	6GT2810-2AB03	6GT2810-2AB04
Product photo				
Area of application	Simple identification such as barcode replacement or supplementation, through warehouse and distribution logistics, right up to product identification.			
EPC memory	32 bytes / 256 bits	12 ... 16 bytes / 96 ... 128 bits	12 ... 30 bytes / 96 ... 240 bits	32 bytes / 256 bits
User memory	64 bytes / 512 bits	64 bytes / 512 bits	64 bytes / 512 bits	64 bytes / 512 bits
Read range	max. 4 m [1]	Max. 5 m [1]		max. 4 m [1]
Mounting	Self-adhesive, for attaching to plastic surfaces.	Self-adhesive, for example for attaching to packaging units, paper or cartons		
	Not suitable for fixing straight onto metal or onto liquid containers			

[1] Depending on the environment, the reader/the antennas and the set power

Smartlabel SIMATIC RF630L (6GT2810-2AC82; 6GT2810-2AE8x)			
	6GT2810-2AC82	6GT2810-2AE80-0AX2	6GT2810-2AE81-0AX1
Product photo			
Area of application	Simple identification such as barcode replacement or supplementation, through warehouse and distribution logistics, right up to product identification.		
EPC memory	16 bytes / 128 bits	12 ... 60 bytes / 96 ... 480 bits [1]	16 bytes / 128 bits
User memory	16 bytes / 128 bits	16 ... 64 bytes / 128 ... 512 bits [1]	--
Read range	max. 3.5 m [2]	max. 4 m [2]	
Mounting	Self-adhesive, for attaching to plastic surfaces.		
	Not suitable for fixing straight onto metal or onto liquid containers		

[1] The EPC memory has a default size of 96 bits. If necessary, the EPC memory size can be expanded to 480 bits in increments of 16 bits at the cost of the user memory.

[2] Depending on the environment, the reader/the antennas and the configured power

7.2.2 Ordering data

Table 7- 3 Ordering data RF630L

Product	Article number
SIMATIC RF630L [1] Smartlabel 101.6 × 50.8 mm	6GT2810-2AB01-0AX1
SIMATIC RF630L [2] Smartlabel 97 × 27 mm	6GT2810-2AB02-0AX0
SIMATIC RF630L [3] Smartlabel 54 × 34 mm	6GT2810-2AB03
SIMATIC RF630L [3] Smartlabel 74 × 27 mm	6GT2810-2AB04
SIMATIC RF630L [4] Smartlabel 45 × 20 mm	6GT2810-2AC82
SIMATIC RF630L [5] Smartlabel 105 × 25 mm	6GT2810-2AE80-0AX2
SIMATIC RF630L [6] Smartlabel 90 × 30 mm	6GT2810-2AE81-0AX1

Delivery format

SIMATIC RF630L smart label is supplied in the following form:

- 1) 4 000 Smartlabels per packaging unit: 1 000 labels on a roll
  Minimum order quantity: 1 packaging unit (4 000 units)
- 2) 5 000 smart labels per packaging unit: 5 000 labels on one roll
  Minimum order quantity: 1 packaging unit (5 000 units)
- 3) 2 000 Smartlabels per packaging unit: 2 000 labels on one roll
  Minimum order quantity: 1 packaging unit (2 000 units)
- 4) 10 000 Smartlabels per packaging unit: 2 500 labels on a roll
  Minimum order quantity: 1 packaging unit (10 000 units)
- 5) 5 000 Smartlabels per packaging unit: 1 000 labels on a roll
  Minimum order quantity: 5 packaging unit (5 000 units)
- 6) 7 000 Smartlabels per packaging unit: 3 500 labels on a roll
  Minimum order quantity: 1 packaging unit (7 000 units)

7.2.3 Technical data

Table 7- 4 Technical specifications of the transponder SIMATIC RF630L

	6GT2810-2AB01-0AX1	6GT2810-2AB02-0AX0
Product type designation	SIMATIC RF630L	
Radio frequencies		
Operating frequency	860 to 960 MHz	
Memory		
Chip (manufacturer/type)	NXP / G2IM	IMPINJ / MONZA 4QT
Memory type	EEPROM	
Memory configuration		
• EPC	• 32 bytes / 256 bits	• 12 ... 16 bytes / 96 ... 128 bits
• User memory	• 64 bytes / 512 bits	• 64 bytes / 512 bits
• TID	• 12 bytes / 96 bits	• 4 bytes / 32 bits
Number of write cycles (< 40 °C)	> 10^5	
Number of read cycles (< 40 °C)	> 10^{14}	
Data retention time (< 40 °C)	30 years	

	6GT2810-2AB01-0AX1	6GT2810-2AB02-0AX0
Electrical data		
Range	≤ 4 m [1]	≤ 5 m [1]
Protocol	ISO 18000-63	
Transmission speed	≤ 320 kbps	
Polarization	Linear	
Multitag capability	Yes	
Mechanical specifications		
Material	Paper	
Silicone-free	Yes	
Color	White	
Antenna material	Aluminum	
Type of antenna	Shortened dipole	
Printing	Can be printed using heat transfer technique	
Roll core diameter	76 mm	
Roll outer diameter	≤ 120 mm	
Permitted ambient conditions		
Ambient temperature		
• In operation, during write/read access	• -25 ... +65 °C	• -40 ... +65 °C
• In operation, outside write/read access	• -25 ... +80 °C	• -40 ... +80 °C
• During transportation and storage	• +15 ... +25 °C [2]	
Distance from metal	Not suitable for mounting directly on metal	
Degree of protection	IP67 (when adhered)	
Resistance to mechanical stress	Torsion and bending stress conditionally permissible	
Design, dimensions and weight		
Dimensions (L x W x D)	101.6 x 50.8 × 0.3 mm	27 × 97 × 0.3 mm
Weight	1 g	

[1] The information relates to the maximum read range. You will find more information on ranges in the section "Minimum distances and maximum ranges (Page 55)".

[2] For more information, refer to the section "Storage and transportation roll goods (Page 363)".

Table 7- 5 Technical specifications of the transponder SIMATIC RF630L

	6GT2810-2AB03	6GT2810-2AB04
Product type designation	SIMATIC RF630L	
Radio frequencies		
Operating frequency	860 to 960 MHz	
Memory		
Chip (manufacturer/type)	NXP / G2XM	NXP / G2iM
Memory type	EEPROM	
Memory configuration		
• EPC	• 12 ... 30 bytes / 96 ... 240 bits	• 32 bytes / 256 bits
• User memory	• 64 bytes / 512 bits	• 64 bytes / 512 bits
• TID	• 8 bytes / 64 bits	• 12 bytes / 96 bits
Number of write cycles (< 40 °C)	> 10^5	
Number of read cycles (< 40 °C)	> 10^{14}	
Data retention time (< 40 °C)	10 years	30 years
Electrical data		
Range	≤ 5 m [1)]	≤ 4 m [1)]
Protocol	ISO 18000-63	
Transmission speed	≤ 320 kbps	
Polarization	Linear	
Multitag capability	Yes	
Mechanical specifications		
Material	Paper	PET
Silicone-free	Yes	
Color	White	
Antenna material	Aluminum	
Type of antenna	Shortened dipole	
Printing	Can be printed using heat transfer technique	
Roll core diameter	76 mm	
Roll outer diameter	≤ 120 mm	

	6GT2810-2AB03	6GT2810-2AB04
Permitted ambient conditions		
Ambient temperature		
• In operation, during write/read access	• -40 ... +65 °C	• -20 ... +65 °C
• In operation, outside write/read access	• -40 ... +80 °C	• -20 ... +85 °C
• During transportation and storage	• +15 ... +25 °C [2]	
Distance from metal	Not suitable for mounting directly on metal	
Degree of protection	IP67 (when adhered)	
Resistance to mechanical stress	Torsion and bending stress conditionally permissible	
Design, dimensions and weight		
Dimensions (L x W x D)	34 × 54 × 0.3 mm	74 × 27 × 0.3 mm
Weight	1 g	

[1] The information relates to the maximum read range. You can find more information on ranges in the section "Minimum distances and maximum ranges (Page 55)".

[2] For more information, refer to the section "Storage and transportation roll goods (Page 363)".

Table 7- 6 Technical specifications of the transponder SIMATIC RF630L

	6GT2810-2AC82
Product type designation	SIMATIC RF630L
Radio frequencies	
Operating frequency	860 to 960 MHz
Memory	
Chip (manufacturer/type)	Alien / Higgs4
Memory type	EEPROM
Memory configuration	
• EPC	• 16 bytes / 128 bits [1)]
• User memory	• 16 bytes / 128 bits
• TID	• 24 bytes / 192 bits
Number of write cycles (≈ 22 °C)	> 10 000; at least 1 000
Number of read cycles (≈ 22 °C)	> 10^{14}
Data retention time (< 55 °C)	50 years
Electrical data	
Range	max. 3.5 m [2)]
Protocol	ISO 18000-63
Transmission speed	≤ 320 Kbps
Polarization	Linear
Mechanical specifications	
Material	PET
Silicone-free	Yes
Color	White
Antenna material	Aluminum
Type of antenna	Compressed dipole
Printing	Can be printed using heat transfer technique
Roll core diameter	76.2 mm
Roll outer diameter	170 (±3) mm

	6GT2810-2AC82
Permitted ambient conditions	
Ambient temperature	
• In operation, during write/read access	• -25 … +85 °C
• In operation, outside write/read access	• -25 ... +85 °C Special feature: 1 hour at +95 °C
• During transportation and storage	• +5 ... +25 °C [3]
Distance from metal	Not suitable for mounting directly on metal
Degree of protection	IP67 [4]
Resistance to mechanical stress	Torsion and bending stress conditionally permissible

Design, dimensions and weight	
Dimensions (L x W x D)	45 (±0.5) × 20 (±0.5) x 0.3 mm
Weight	Approx. 0.5 g

[1] The EPC-ID has different IDs preset.

[2] The information relates to the maximum read range. You can find more information on ranges in the section "Minimum distances and maximum ranges (Page 55)".

[3] For more information, refer to the section "Storage and transportation roll goods (Page 363)".

[4] When affixed and if the ambient conditions are adhered to (operating temperature -25 ... +85 °C).

Table 7- 7 Technical specifications of the transponder SIMATIC RF630L

	6GT2810-2AE80-0AX2	6GT2810-2AE81-0AX1
Product type designation	SIMATIC RF630L	
Radio frequencies		
Operating frequency	860 to 960 MHz	
Memory		
Chip (manufacturer/type)	Alien / Higgs3	NXP / G2iL
Memory type		
Memory configuration		
• EPC	• 12 ... 60 bytes / 96 ... 480 bits [1)]	• 16 bytes / 128 bits
• User memory	• 16 ... 64 bytes / 128 ... 512 bits [1)]	• --
• TID	• 4 bits / 32 Byte	• 8 bytes / 64 bits
Number of write cycles (≈ 22 °C)	> 100 000	
Number of read cycles (≈ 22 °C)	unlimited	
Data retention time (< 55 °C)	30 years	
Electrical data		
Range	≤ 4 m [2)]	
Protocol	ISO 18000-63	
Transmission speed	≤ 320 Kbps	
Polarization	Linear	
Mechanical specifications		
Material	PET	
Silicone-free	Yes	
Color	White	
Antenna material	Aluminum	
Type of antenna	ALN-9640 "Squiggle®" inlay	Belt
Printing	Can be printed using heat transfer technique	
Roll core diameter	76.2 mm	76.4 mm
Roll outer diameter	110 mm	200 (±3) mm
Winding direction	Wound to the outside	

	6GT2810-2AE80-0AX2	6GT2810-2AE81-0AX1
Permitted ambient conditions		
Ambient temperature		
• In operation, during write/read access	• -25 … +85 °C	• -25 … +85 °C
• In operation, outside write/read access	• -25 ... +85 °C Special feature: at +130 °C: Storage retention tested for 30 minutes	• -25 ... +85 °C Special feature: starting at +140 °C: No processing possible at -40 °C and +160 °C: Storage retention tested for 90 minutes
• During transportation and storage	• +5 ... +25 °C [3]	
Distance from metal	Not suitable for mounting directly on metal	
Degree of protection	IP67 [4]	
Resistance to mechanical stress	Torsion and bending stress conditionally permissible	
Design, dimensions and weight		
Dimensions (L x W x D)	105 (±1) × 25 (±1) × 0.3 mm	90 (±0.5) × 30 (±0.5) × 0.3 mm
Weight	Approx. 1 g	

[1] The EPC memory has a default size of 96 bits. If necessary, the EPC memory size can be expanded to 480 bits in increments of 16 bits at the cost of the user memory.

[2] The information relates to the maximum read range. You can find more information on ranges in the section "Minimum distances and maximum ranges (Page 55)".

[3] For more information, refer to the section "Storage and transportation roll goods (Page 363)".

[4] When affixed and if the ambient conditions are adhered to (operating temperature -25 ... +85 °C).

7.2.4 Dimension drawings

All dimensions in [mm].

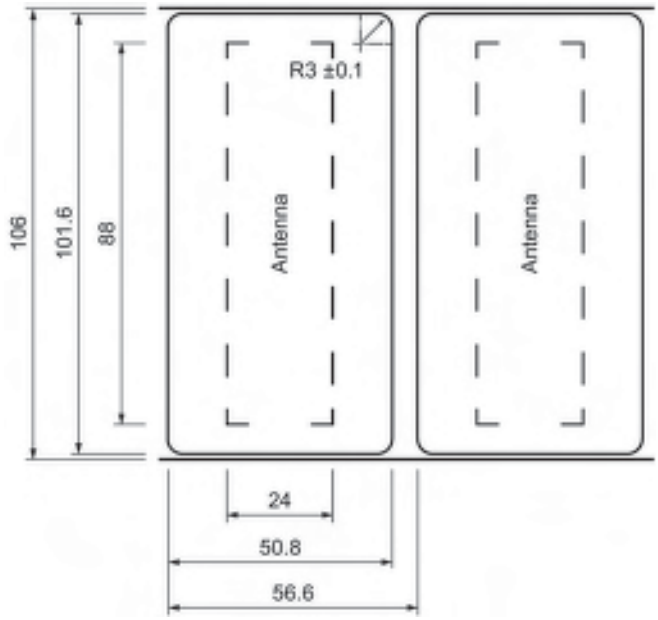

Figure 7-4 Dimension drawing SIMATIC RF630L (6GT2810-2AB01-0AX1)

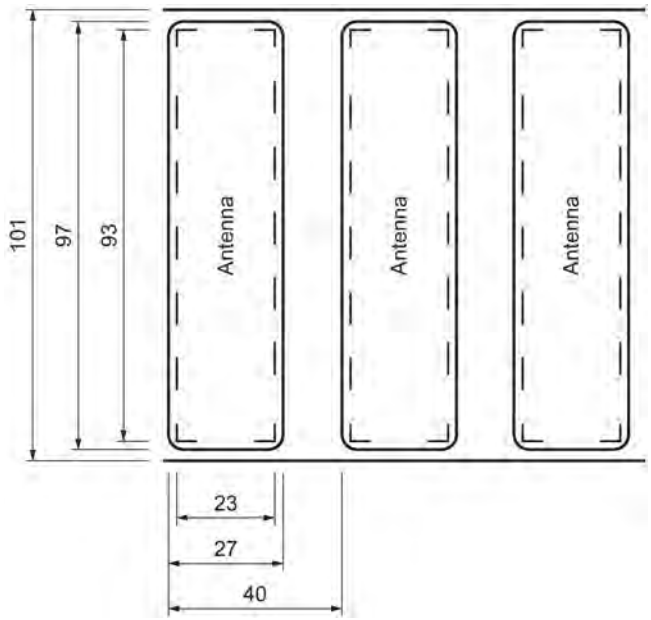

Figure 7-5 Dimension drawing SIMATIC RF630L (6GT2810-2AB02-0AX0)

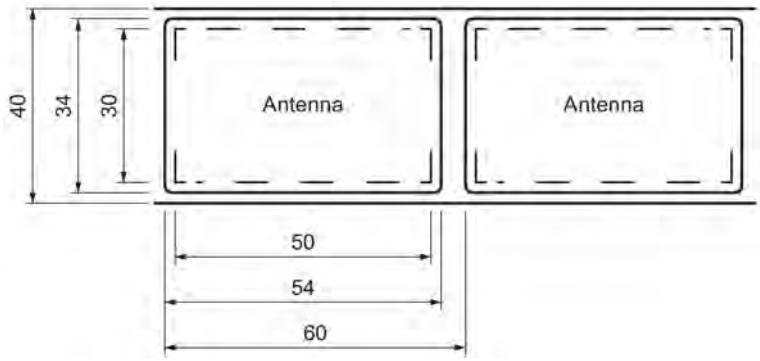

Figure 7-6 Dimension drawing SIMATIC RF630L (6GT2810-2AB03)

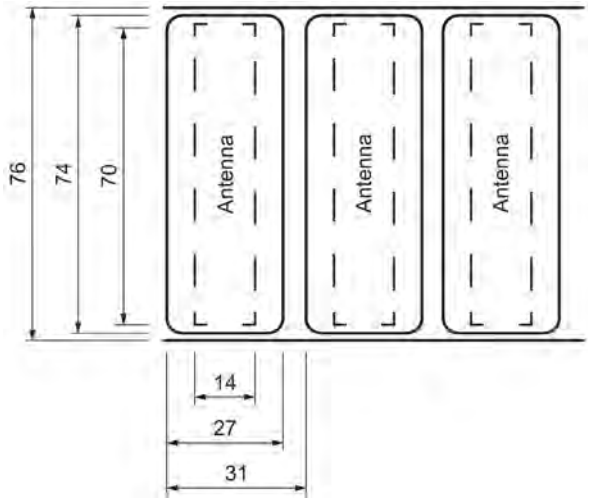

Figure 7-7 Dimension drawing SIMATIC RF630L (6GT2810-2AB04)

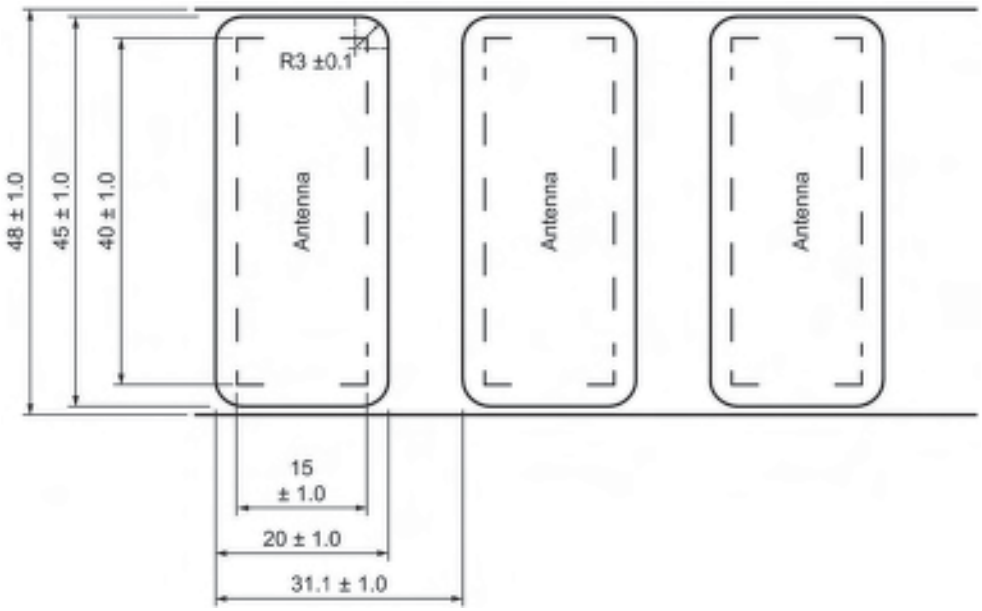

Figure 7-8 Dimension drawing SIMATIC RF630L (6GT2810-2AC82)

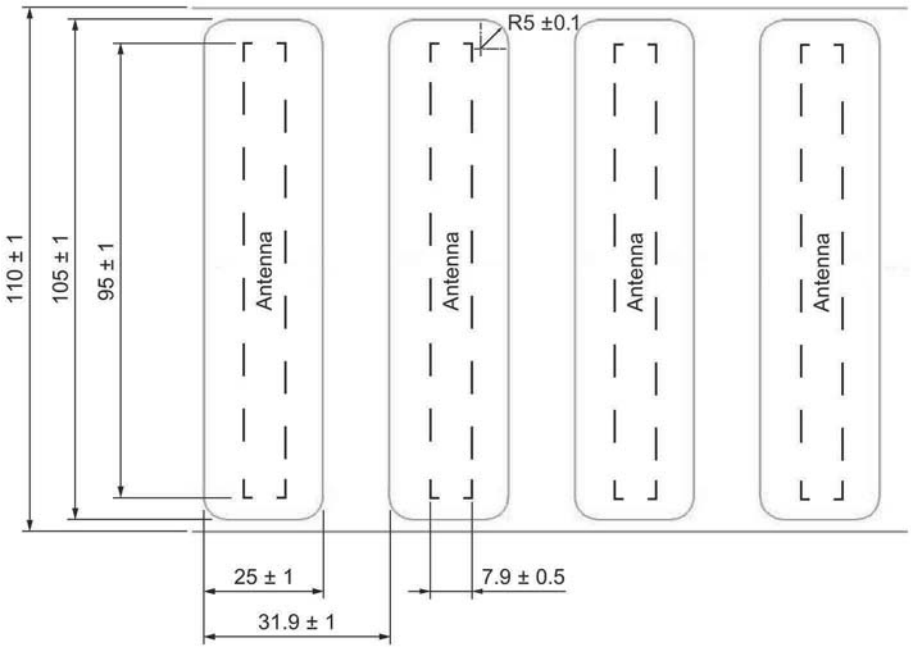

Figure 7-9 Dimension drawing SIMATIC RF630L (6GT2810-2AE80-0AX2)

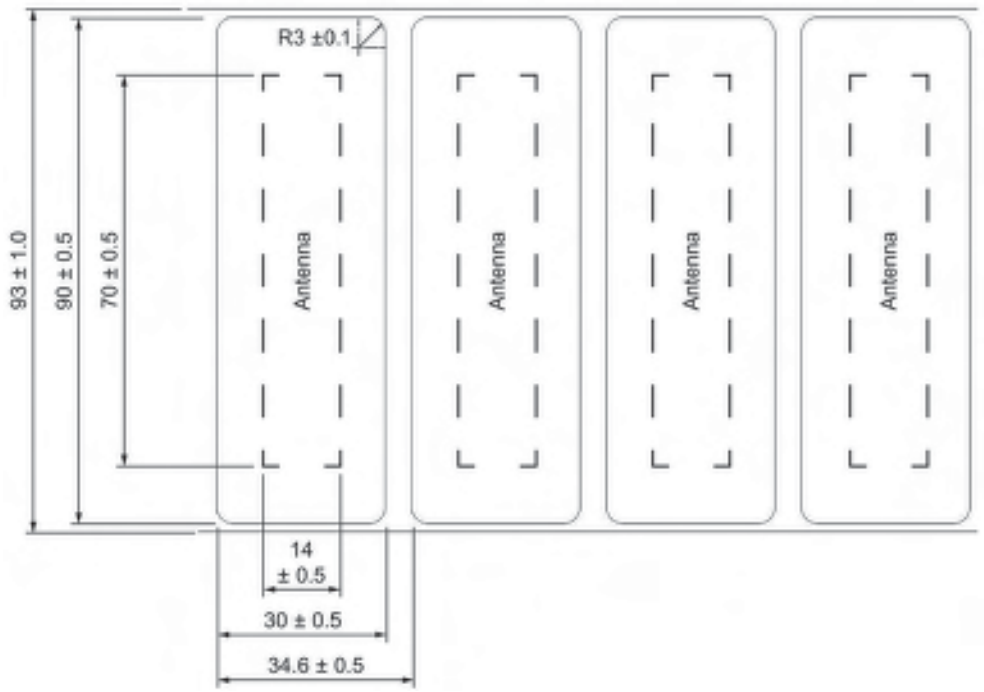

Figure 7-10 Dimension drawing SIMATIC RF630L (6GT2810-2AE81-0AX1)

7.2.5 Certificates and approvals

Certificate	Description
CE	Conformity with the RED directive 2014/53/EU Conformity with the RoHS directive 2011/65/EU
FC Federal Communications Commission	Passive labels and transponders comply with the valid regulations; certification is not required.

7.3 SIMATIC RF642L Smartlabel

7.3.1 Features

The SIMATIC RF642L-Smartlabel is a passive and maintenance-free data carrier. The Smartlabel operates based on UHF Class 1 Gen 2 technology and is used to save the "Electronic Product Code" (EPC) up to 448 bits. The transponder also has 2048 bits of user memory.

The SIMATIC RF642L is designed for direct mounting on metal surfaces. When used on non-metallic surfaces, the reading range can be reduced by up to 70 %.

SIMATIC RF642L Smartlabel	Characteristics	
	Area of application	Industrial plant management, identification of tools, containers and metallic equipment.
	Frequency range	• ETSI: 865 to 868 MHz • FCC: 902 to 928 MHz
	Air interface	According to ISO 18000-63
	Memory	• EPC: 56 bytes / 448 bits • User memory: 256 bytes / 2048 bits
	Read range	Max. 2.8 m on metal [1]
	Mounting	Self-adhesive Designed for mounting directly on metal

[1] Depending on the environment, the employed reader/the antennas and the set power

7.3.2 Ordering data

Table 7- 8 RF642L ordering data

Product	Article number
SIMATIC RF642L (ETSI)	6GT2810-3AC00
SIMATIC RF642L (FCC)	6GT2810-3AC10

Delivery form

SIMATIC RF642L Smartlabel is delivered in the following form:

- 500 Smartlabels per packaging unit: 500 labels on one roll

  Minimum order quantity: 1 packaging unit (500 units)
- The Smartlabels have a unique 12-byte EPC ID.

7.3.3 Technical specifications

Table 7- 9 Technical specifications of the SIMATIC RF642L transponder

	6GT2810-3ACx0
Product type designation	SIMATIC RF642L
Radio frequencies	
Operating frequency	
• ETSI	• 865 to 868 MHz
• FCC	• 902 to 928 MHz
Memory	
Chip (manufacturer/type)	NXP / UCODE 7xm-2k
Memory type	EEPROM
Memory configuration	
• EPC	• 56 bytes / 448 bits
• User memory	• 256 bytes / 2048 bits
• TID	• 12 bytes / 96 bits
Number of write cycles (< 40 °C)	> 10^5
Number of read cycles (< 40 °C)	> 10^{14}
Data retention time (< 40 °C)	50 years
Electrical data	
Range	
• Writing	• ≤ 0.9 m
• Reading	• ≤ 2.8 m
Protocol	ISO 18000-63
Transmission speed	≤ 320 kbps
Polarization	Linear
Mechanical specifications	
Material	PET, PE
Silicone-free	Yes
Color	White
Antenna material	Aluminum
Type of antenna	Shortened dipole
Printing	Can be printed using heat transfer technique
Roll core diameter	76 mm
Roll outer diameter	≤ 200 mm

	6GT2810-3ACx0
Permitted ambient conditions	
Ambient temperature	
• In operation, during write/read access	• -20 to +85 °C
• In operation, outside write/read access	• -25 to +85 °C
• During transportation and storage	• +13 ... +23 °C [1]
Distance from metal	0 mm Designed for mounting directly on metal
Degree of protection	IP68 [2]
Resistance to mechanical stress	Torsion and bending stress conditionally permissible
Minimum spacing between labels	
• Vertically	• 50 mm
• Horizontally	• 100 mm

Design, dimensions and weight	
Dimensions (L x W x D)	50 × 22.5 × 1.65 mm
Weight	4 g

[1] Ideal storage conditions

[2] Water depth 1 m for max. 5 hours

7.3.4 Dimension drawing

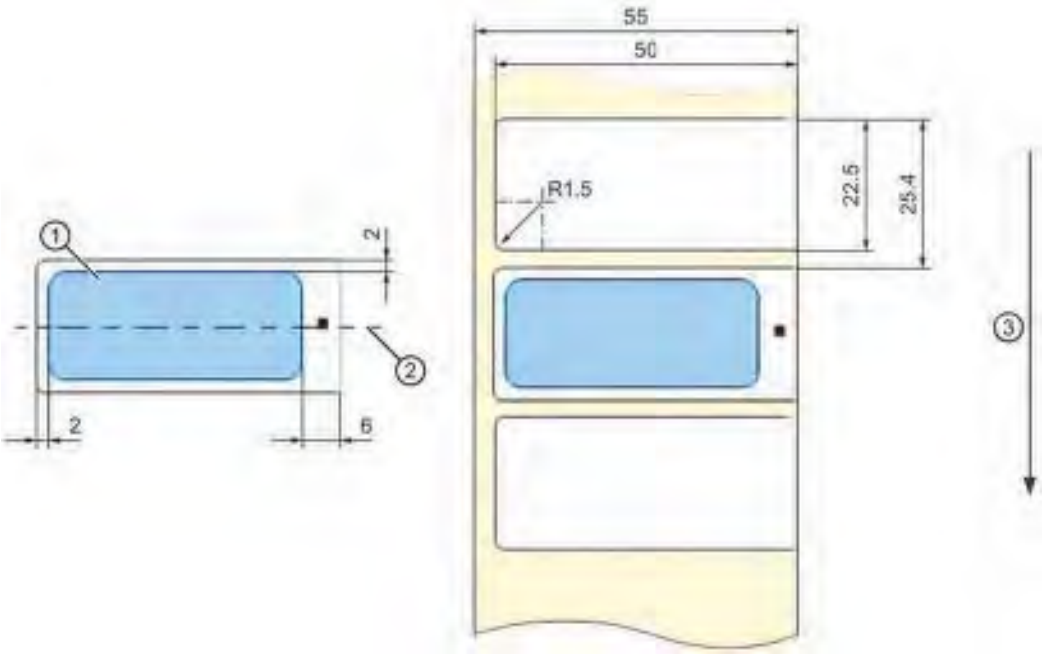

① Printable area
② Polarization axis
③ Conveyor direction

Figure 7-11 Dimension drawing RF642L

All dimensions in mm

7.4 SIMATIC RF690L Smartlabel

7.4.1 Characteristics

The SIMATIC RF690L High Temp Smartlabel is a passive and maintenance-free data carrier. It operates based on the UHF Class 1 Gen 2 technology and is used to store the "Electronic Product Code" (EPC). The transponder also has a user memory.

The SIMATIC RF690L can also be mounted on metal.

Smartlabel SIMATIC RF690L	Characteristics	
	Area of application	Heat-proof UHF label for a wide range of possible applications, for example, on metal or with high temperatures up to +160 °C
	Frequency range	• ETSI: 865 to 868 MHz • FCC: 902 to 928 MHz
	Air interface	According to ISO 18000-63
	Memory	• EPC: 8 ... 60 bytes / 64 ... 480 bits [1)] • User memory: 16 ... 64 bytes / 128 ... 512 bits [1)]
	Read range	• Max. 5.0 m on non-metallic surface [2)] • Max. 2.4 m on metal [2)]
	Mounting	Self-adhesive Suitable for mounting directly on metal.

1) The EPC memory has a default size of 96 bits. When necessary, the EPC memory size can be expanded to 480 bits in steps of 16 bits at the cost of the user memory.

2) Depending on the environment, the employed reader/the antennas and the set power

7.4.2 Ordering data

Table 7- 10 Ordering data RF690L

Product	Article number
SIMATIC RF690L (ETSI)	6GT2810-2AG00
SIMATIC RF690L (FCC)	6GT2810-2AG10

Delivery format

SIMATIC RF690L smart label is supplied in the following form:

- 400 smart labels per packaging unit: 400 labels on one roll

  Minimum order quantity: 1 packaging unit (400 units)

7.4.3 Memory organization

Transponders with an "Alien Higgs 3" chip have an EPC memory with a standard size of 96 Bits (12 bytes). When necessary, the EPC memory size can be expanded to 480 bits (60 bytes) in steps of 16 bits at the cost of the user memory.

The following table shows how many bytes can be added to the EPC memory and how this affects the size of the user memory.

Table 7- 11 Size of the EPC memory and effect on the user memory

EPC memory		User memory
[bytes]	[bits]	[bytes]
54 ... 60	432 ... 480	16
46 ... 52	368 ... 416	24
38 ... 44	304 ... 352	32
30 ... 36	240 ... 288	40
22 ... 28	176 ... 224	48
14 ... 20	112 ... 160	56
0 ... 12	0 ... 96	64

7.4.4 Technical specifications

Table 7- 12 Technical specifications of the transponder SIMATIC RF690L

	6GT2810-2AGx0
Product type designation	SIMATIC RF690L
Radio frequencies	
Operating frequency	
• ETSI	• 865 to 868 MHz
• FCC	• 902 to 928 MHz
Memory	
Chip (manufacturer/type)	Alien / Higgs 3
Memory type	EEPROM
Memory configuration	
• EPC	• 8 ... 60 bytes / 64 ... 480 bits [1)]
• User memory	• 16 ... 64 bytes / 128 ... 512 bits [1)]
• TID	• 4 bytes / 32 bits
• Unique TID	• 8 bytes / 64 bits
• TID device configuration	• 12 bytes / 96 bits

	6GT2810-2AGx0
Number of write cycles (< 40 °C)	> 500
Number of read cycles (< 40 °C)	> 10^{14}
Data retention time (< 40 °C)	50 years
Electrical data	
Range	
• Writing	• ??? m
• Reading	• ≤ 5.0 m [2)]
Protocol	EPCglobal Class 1 Gen 2 / ISO 18000-63
Polarization	Linear
Mechanical specifications	
Material	PET
Silicone-free	Yes
Color	Beige/silver
Antenna material	Aluminum
Type of antenna	Shortened dipole
Printing	Can be printed using heat transfer technique
Roll core diameter	76 mm
Roll outer diameter	200 mm
Permitted ambient conditions	
Ambient temperature	
• In operation, during write/read access	• -25 ... +85 °C
• In operation, outside write/read access	• -25 to +95 °C permanently Special features: As of 100 °C 20% reduction of the write/read distance +140 ... + 160 °C: No processing possible
• During transportation and storage	• +13 ... +23 °C [3)]
Distance from metal	0 mm Suitable for mounting directly on metal
Degree of protection	IP67
Resistance to mechanical stress	Torsion and bending stress conditionally permissible

	6GT2810-2AGx0
Design, dimensions and weight	
Dimensions (L x W x D)	
• ETSI	• 88 × 25 × 1.6 mm
• FCC	• 75 × 25 × 1.6 mm
Weight	5 g

1) The EPC memory has a default size of 96 bits. When necessary, the EPC memory size can be expanded to 480 bits in steps of 16 bits at the cost of the user memory.

2) The information relates to the maximum read range. You can find more information on ranges in the section "Minimum distances and maximum ranges (Page 55)".

3) For more information, refer to the section "Storage and transportation roll goods (Page 363)"

7.4.5 Dimension drawing

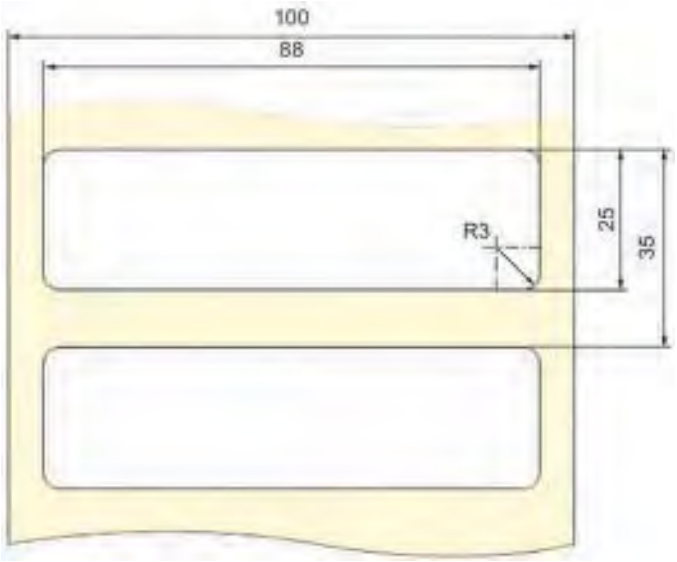

Figure 7-12 Dimension drawing RF690L (ETSI, article number: 6GT2810-2AG00)

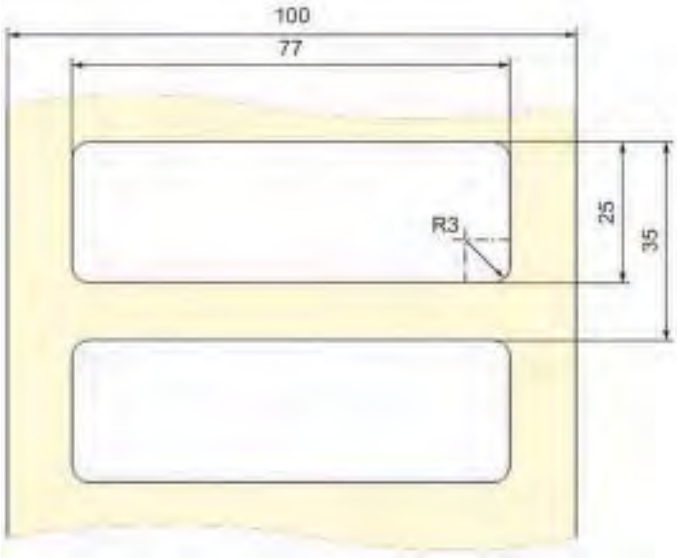

Figure 7-13 Dimension drawing RF690L (FCC, article number: 6GT2810-2AG10)

All dimensions in mm

7.4.6 Certificates and approvals

Certificate	Description
CE	Conformity with the RED directive 2014/53/EU Conformity with the RoHS directive 2011/65/EU
FC Federal Communications Commission	Passive labels and transponders comply with the valid regulations; certification is not required.

7.5 SIMATIC RF610T

7.5.1 Features

The SIMATIC RF610T is passive and maintenance-free. It operates based on the UHF Class 1 Gen 2 technology and is used for saving the electronic product code (EPC) of 96 bits / 240 bits. The label also has a 512 bit user memory.

The SIMATIC RF610T offers a host of possible uses for a wide range of applications and supports efficient logistics throughout the entire process chain.

Thanks to its antenna geometry, the transponder can be read from any direction. However, the range is reduced if it is not aligned in parallel with the antenna.

SIMATIC RF610T	Characteristics	
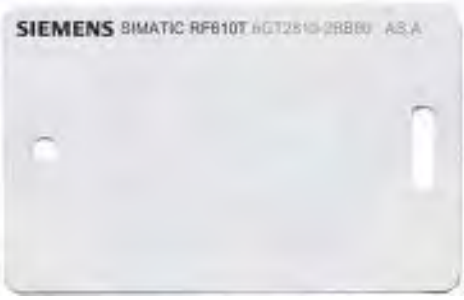	Area of application	• Simple identification, such as barcode replacement or barcode supplement • Warehouse and distribution logistics • Product identification For the Food & Beverage sector, a special version can be supplied on request that is certified for use in contact with food.
	Air interface	According to ISO 18000-63
	Memory	• EPC: 96 ... 240 bits • User memory: 64 bytes
	Read range	Max. 5 m [1]
	Mounting	• Suspended by means of cable ties, or similar • Can also be fixed with screws or glued by customer. • Not suitable for mounting straight onto metal.

[1] Depending on the environment, the reader/the antennas and the set power

7.5.2 Ordering data

Table 7- 13 Ordering data RF610T

Product	Article number
SIMATIC RF610T	6GT2810-2BB80

Delivery format

SIMATIC RF610T is supplied in the following form:

- 500 transponders per packaging unit

  Minimum order quantity: 1 packaging unit (500 units)

7.5.3 Technical specifications

Table 7- 14 Technical specifications of the transponder SIMATIC RF610T

	6GT2810-2BB80
Product type designation	SIMATIC RF610T
Radio frequencies	
Operating frequency	
• ETSI	• 865 to 868 MHz
• FCC	• 902 to 928 MHz
Memory	
Chip (manufacturer/type)	NXP / G2XM
Memory type	EEPROM
Memory configuration	
• EPC	• 12 ... 30 bytes / 96 ... 240 bits
• User memory	• 64 bytes / 512 bits
• TID	• 8 bytes / 64 bits
• Reserved (passwords)	• 8 bytes / 64 bits
Number of write cycles (< 40 °C)	> 10^5
Number of read cycles (< 40 °C)	> 10^{14}
Data retention time (< 40 °C)	10 years
Electrical data	
Range	≤ 5 m [1)]
Protocol	ISO 18000-63
Transmission speed	≤ 320 kbps
Polarization	Linear

	6GT2810-2BB80
Mechanical specifications	
Material	PVC
Silicone-free	Yes
Color	White
Antenna material	Aluminum
Type of antenna	Shortened dipole
Printing	Can be printed using heat transfer technique
Permitted ambient conditions	
Ambient temperature	
• In operation, during write/read access	• -25 ... +85 °C
• In operation, outside write/read access	• -40 ... +85 °C
• During transportation and storage	• -40 … +85 °C
Distance from metal	Not suitable for mounting directly on metal
Degree of protection	IP67
Resistance to mechanical stress	Torsion and bending stress conditionally permissible
Shock-resistant according to DIN EN 60721-3-7, Class 7 M3	100 g [2]
Vibration to EN 60068-2-6	50 g [2]
Design, dimensions and weight	
Dimensions (L x W x D)	86 × 54 × 0.6 mm
Weight	3 g

[1] The information relates to the maximum read range. You will find more information on ranges in the section "Minimum distances and maximum ranges (Page 55)".

[2] The values for shock and vibration are maximum values and must not be applied continuously.

Note

Effects of temperatures > 70 °C

Note that in temperature ranges > 70 °C, the transponder can become slightly deformed. However, this has no effect on the transponder function.

7.5.4 Dimension drawing

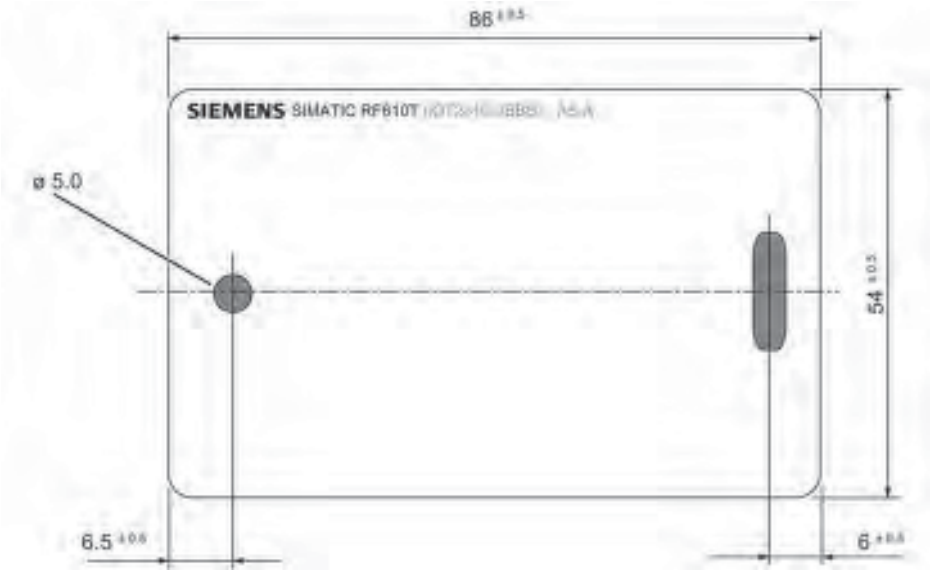

Figure 7-14 Dimensional drawing of SIMATIC RF610T

All dimensions in mm

7.5.5 Certificates and approvals

Certificate	Description
CE	Conformity with the RED directive 2014/53/EU Conformity with the RoHS directive 2011/65/EU
FC Federal Communications Commission	Passive labels and transponders comply with the valid regulations; certification is not required.
C UL US	This product is UL-certified for the USA and Canada. It meets the following safety standard(s): • UL508 - Industrial Control Equipment • CSA C22.2 No. 142 - Process Control Equipment • UL Report E 120869

7.6 SIMATIC RF610T ATEX

7.6.1 Features

The SIMATIC RF610T special variant ATEX is passive and maintenance-free. It operates based on the UHF Class 1 Gen 2 technology and is used for saving the electronic product code (EPC) of 96 bits / 240 bits. The label also has a 512 bit user memory.

The SIMATIC RF610T special variant ATEX provides numerous possible uses for a wide range of applications and allows efficient logistics throughout the entire process chain.

Thanks to its antenna geometry, the transponder can be read from any direction. However, the range is reduced if it is not aligned in parallel with the antenna.

SIMATIC RF610T	Characteristics	
	Area of application	• Simple identification, such as barcode replacement or barcode supplement • Warehouse and distribution logistics • Product identification For the Food & Beverage sector, a special version can be supplied on request that is certified for use in contact with food.
	Air interface	According to ISO 18000-63
	Memory	• EPC: 96 ... 240 bits • User memory: 64 bytes
	Read range	Max. 5 m [1]
	Mounting	• Suspended by means of cable ties, or similar • Can also be fixed with screws or glued by customer. • Not suitable for mounting straight onto metal.

[1] Depending on the environment, the reader/the antennas and the set power

7.6.2 Ordering data

Table 7- 15 Ordering data RF610T ATEX

Product	Article number
SIMATIC RF610T ATEX	6GT2810-2BB80-0AX1

Delivery format

SIMATIC RF610 T ATEX is supplied in the following form:

- 500 transponders per packaging unit

  Minimum order quantity: 1 packaging unit (1 000 units)

NOTICE
Approved use This device/system may only be used for the applications described in the catalog and the technical documentation "System manual SIMATIC RF600 (https://support.industry.siemens.com/cs/ww/en/ps/15069/man)" and only in combination with third-party devices and components recommended and/or approved by Siemens.

7.6.3 Use of the transponder in hazardous areas

In a conformity declaration, TÜV NORD CERT GmbH has confirmed compliance with the essential health and safety requirements relating to the design and construction of equipment and protective systems intended for use in hazardous areas as per Annex II of the directive 2014/34/EU.

The essential health and safety requirements are satisfied in accordance with standards EN 60079-0: 2012 + A11: 2013, EN 60079-11: 2012.

This allows the RF610T special variant ATEX transponder to be used in hazardous areas for gases, for the device category 3 G and gas group IIB, or alternatively in hazardous areas for dusts, for the device category 3 D and group IIIB.

⚠ WARNING
Ignitions of gas-air mixtures or dust-air mixtures The SIMATIC RF610T transponder must be set up and maintained in such a way that electrostatic discharges are excluded. The SIMATIC RF610T transponder may not be installed in areas influenced by processes that generate high electrostatic charges.

Identification and warning on the transponder

Figure 7-15 Schematic representation of the SIMATIC RF610T ATEX transponder

The labeling of the front of the transponder shown above is an example and can vary between batches produced at different times.

This does not affect the hazardous area marking.

Order number and serial number

6GT2810-2BB80-0AX1 / (S) B0000007

Identification

TÜV 11 ATEX 081778 X
II 3 G Ex ic IIB T6/T5/T4 Gc

II 3 D Ex ic IIIB T_5 120°C Dc,
-25 °C < Ta < +85 °C

Warning

WARNING
WARNING POTENTIAL ELECTROSTATIC CHARGIMG HAZARD-SEE INSTRUCTIONS

Manufacturer's address - distributor

Siemens AG

DE-76181 Karlsruhe

7.6.3.1 Use of the transponder in hazardous areas for gases

Temperature class grading for gases with up to 2000 mW ERP

The temperature class of the transponder for hazardous areas depends on the ambient temperature range.

If the radiated power of an antenna radiating into the hazardous area or located in the hazardous area and operating in the 865 - 868 MHz frequency band cannot exceed the value 2000 mW, the temperature class grading is as follows:

Table 7- 16 Temperature class grading for gases

Ambient temperature range	Temperature class
-25 °C to +85 °C	T4
-25 °C to +65 °C	T5
-25 °C to +50 °C	T6

WARNING

Ignitions of gas-air mixtures

When using the RF610T transponder, check to make sure that the temperature class is adhered to in keeping with the requirements of the area of application.

Non-compliance with the permitted temperature ranges while using the transponder can lead to ignitions of gas-air mixtures.

WARNING

Ignitions of gas-air mixtures

The maximum radiated power of the transmitter used to operate the transponder must not exceed 2000 mW ERP.

Non-compliance with the permitted radiated power can lead to ignitions of gas-air mixtures.

7.6.3.2 Use of the transponder in hazardous areas for dusts

The equipment is suitable for dusts whose ignition temperatures for a dust layer of 5 mm are higher than 210 °C (smoldering temperature). The ignition temperature specified here according to EN 60079-0: 2012 + A11: 2013 for ignition protection type ic in this case references the smoldering temperature of a layer of combustible flyings (ic IIIA) or alternatively non-conductive dusts (ic IIIB).

Temperature class grading for dusts with up to 2000 mW ERP

If the radiated power of an antenna radiating into the hazardous area or located in the hazardous area and operating in the 865 - 868 MHz frequency band cannot exceed the value 2000 mW, the temperature class grading is as follows:

Table 7- 17 Temperature class grading for dusts

Ambient temperature range	Temperature value
-25 °C < Ta < +85 °C	T_5 120 °C

WARNING

Ignitions of dust-air mixtures

When using the RF610T transponder, make sure that the temperature values are adhered to in keeping with the requirements of the area of application.

Non-compliance with the permitted temperature ranges while using the transponder can lead to ignitions of dust-air mixtures.

7.6.4 Technical specifications

Table 7- 18 Technical specifications of the transponder SIMATIC RF610T special variant ATEX

	6GT2810-2BB80-0AX1
Product type designation	SIMATIC RF610T special variant ATEX
Radio frequencies	
Operating frequency	
• ETSI	• 865 to 868 MHz
• FCC	• 902 to 928 MHz
Memory	
Chip (manufacturer/type)	NXP / G2XM
Memory type	EEPROM
Memory configuration	
• EPC	• 12 ... 30 bytes / 96 ... 240 bits
• User memory	• 64 bytes / 512 bits
• TID	• 8 bytes / 64 bits
• Reserved (passwords)	• 8 bytes / 64 bits
Number of write cycles (< 40 °C)	> 10^5
Number of read cycles (< 40 °C)	> 10^{14}
Data retention time (< 40 °C)	10 years
Electrical data	
Range	≤ 5 m [1)]
Protocol	ISO 18000-63
Transmission speed	≤ 320 kbps
Polarization	Linear
Mechanical specifications	
Material	PVC
Silicone-free	Yes
Color	White
Antenna material	Aluminum
Type of antenna	Shortened dipole
Printing	Can be printed using heat transfer technique

	6GT2810-2BB80-0AX1
Permitted ambient conditions	
Ambient temperature	
• In operation, during write/read access	• -25 ... +85 °C
• In operation, outside write/read access	• -40 ... +85 °C
• During transportation and storage	• -40 … +85 °C
Distance from metal	Not suitable for mounting directly on metal
Degree of protection	IP67
Resistance to mechanical stress	Torsion and bending stress conditionally permissible
Shock-resistant according to DIN EN 60721-3-7, Class 7 M3	100 g [2)]
Vibration to EN 60068-2-6	50 g [2)]
Design, dimensions and weight	
Dimensions (L x W x D)	86 × 54 × 0.4 mm
Weight	3 g
Standards, specifications, approvals	
Proof of suitability	TÜV 11 ATEX 081778 X (EN 60079-0, EN 60079-11): II 3 G Ex ic IIB T6/T5/T4 Gc, II 3 D Ex ic IIIB T_5 120°C Dc, -25 °C < Ta < +85 °C
MTBF	1712 years

[1)] The information relates to the maximum read range. You will find more information on ranges in the section "Minimum distances and maximum ranges (Page 55)".

[2)] The values for shock and vibration are maximum values and must not be applied continuously.

Note

Effects of temperatures > 70 °C

Note that in temperature ranges > 70 °C, the transponder can become slightly deformed. However, this has no effect on the transponder function.

7.6.5 Dimension drawing

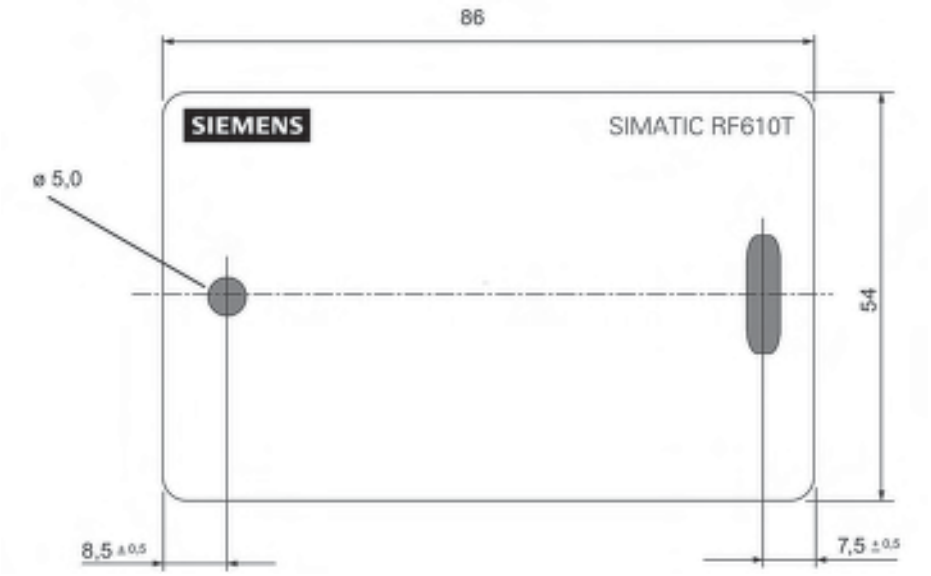

Figure 7-16 Dimension drawing SIMATIC RF610T (special variant ATEX)

All dimensions in mm

7.6.6 Certificates and approvals

Certificate	Description
CE	Conformity with the ATEX directive 2014/34/EU based on: Conformity statement no. TÜV 11 ATEX 081778 X Conformity with the RED directive 2014/53/EU Conformity with the RoHS directive 2011/65/EU
FC Federal Communications Commission	Passive labels and transponders comply with the valid regulations; certification is not required.

7.7 SIMATIC RF620T

7.7.1 Characteristics

The SIMATIC RF620T Transponder is passive and maintenance-free, based on the UHF Class 1 Gen2 technology for storing the 96-bit/128-bit "electronic product code" (EPC).

The transponder also has a 64-byte user memory.

The container tag for industrial applications is rugged and highly resistant to detergents. It is designed for easy attachment onto plastic, wood, glass, e.g. containers, palettes, and trolleys.

The optimum functionality/range of the RF620T on metal is achieved by means of the spacer. Since the plastic is food safe, it is also suitable for use in the food-processing industry.

This container tag is designed for the frequency range of 860 MHz to 960 MHz and can be operated in combination with our UHF system RF600.

SIMATIC RF620T Transponder	Characteristics	
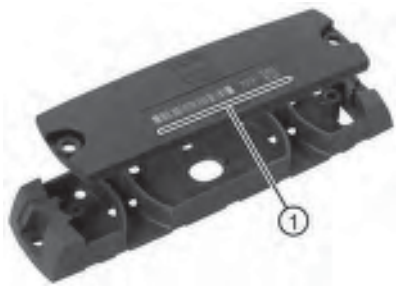	Area of application	Transponder for rugged, industrial requirements such as RF identification in warehouses and the logistics and transport area.
	Frequency range	860 to 960 MHz
	Polarization	Linear
	Memory	• EPC: 96 / 128 bits • User memory: 64 bytes
	Read range	Max. 8 m [1]
	Mounting	• Screw, bond • On metal by means of spacers
	① Labeling area	You can inscribe the transponder itself using laser, or adhere a label to position ①. Possible types of labeling: • Barcode • Inscription in plain text • Data matrix code
	Housing color	Anthracite

[1] Depending on the environment, the reader/the antennas and the set power

7.7.2 Ordering data

Table 7- 19 Ordering data RF620T

Product	Article number
SIMATIC RF620T	6GT2810-2HC81
Spacer for SIMATIC RF620T	6GT2898-2AA00

Delivery format

SIMATIC RF620T is supplied in the following form:

- 20 transponders per packaging unit

  Minimum order quantity: 1 packaging unit (20 units)

7.7.3 Planning the use

7.7.3.1 Range when mounted on flat metallic carrier plates

The transponder generally has linear polarization. The polarization axis runs as shown in the diagram below. When using a circular antenna and when the transponder is centrally mounted on a plane metal plate, which may either be almost square or circular, it can be aligned in any direction. When using a linear antenna, the polarization axes of antenna and transponder must always be aligned in parallel.

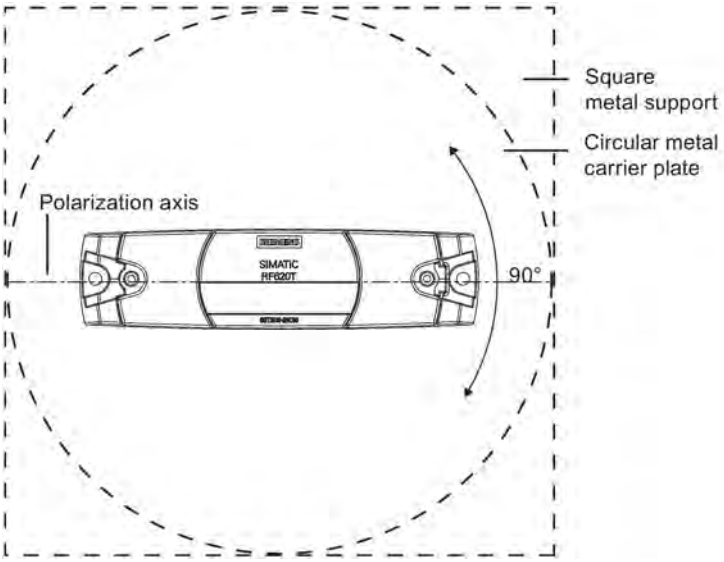

Figure 7-17 Optimum positioning of the transponder on a (square or circular) metal surface

Table 7- 20 Range with metallic, flat carriers without spacers

Carrier material	Range
Metal plate at least 300 x 300 mm	typically 40%

Table 7- 21 Range with flat metallic carriers with spacers

Carrier material	Range
Metal plate at least 300 x 300 mm	typically 100%

The use of spacers on metallic surfaces is recommended.

On rectangular carrier plates, the range depends on the mounting orientation of the transponder.

You will find more information on the range in the section "Minimum distances and maximum ranges (Page 55)".

7.7.3.2 Range when mounted on non-metallic carrier materials

Table 7- 22 Range with non-metallic carriers

Carrier material	Range
Transponder on wooden carrier (dry, degree of moisture < 15%)	typically 75 %
Transponder on plastic carrier	typically 75 %
Transponder on glass	typically 75 %
Transponder on mineral water container	typically 15 %

You will find more information on the range in the section "Minimum distances and maximum ranges (Page 55)".

7.7.4 Technical specifications

Table 7- 23 Technical specifications of the transponder SIMATIC RF620T

	6GT2810-2HC81
Product type designation	SIMATIC RF620T
Radio frequencies	
Operating frequency	
• ETSI	• 865 to 868 MHz
• FCC	• 902 to 928 MHz
Memory	
Chip (manufacturer/type)	IMPINJ / MONZA 4QT
Memory type	EEPROM
Memory configuration	
• EPC	• 12 ... 16 bytes / 96 ... 128 bits
• User memory	• 64 bytes / 512 bits
• TID	• 4 bytes / 32 bits
Number of write cycles (< 40 °C)	> 10^5
Number of read cycles (< 40 °C)	> 10^{14}
Data retention time (< 40 °C)	10 years
Electrical data	
Range	≤ 8 m [1)]
Protocol	ISO 18000-63
Transmission speed	≤ 320 kbps
Polarization	Linear
Mechanical specifications	
Material	PP
Silicone-free	Yes
Color	Anthracite
Antenna material	Aluminum
Type of antenna	Shortened dipole
Printing	Can be printed using heat transfer technique

	6GT2810-2HC81
Permitted ambient conditions	
Ambient temperature	
• In operation, during write/read access	• -25 ... +85 °C
• In operation, outside write/read access	• -40 ... +85 °C
• During transportation and storage	• -40 … +80 °C
Distance from metal	≥ 12 mm (with spacer) Not suitable for mounting directly on metal
Degree of protection	IP67
Resistance to mechanical stress	Torsion and bending stress is not permitted
Shock resistant to EN 60068-2-27	100 g [2)]
Vibration to EN 60068-2-6	50 g [2)]
Design, dimensions and weight	
Dimensions (L x W x D)	
• Transponder	• 127 × 38 × 6 mm
• Spacer	• 157 × 39 × 12 mm
Weight	
• Transponder	• 18 g
• Spacer	• 22 g
Type of mounting	2 x M4 screws ≤ 1.2 Nm

[1)] The information relates to the maximum read range. You will find more information on ranges in the section "Minimum distances and maximum ranges (Page 55)".

[2)] The values for shock and vibration are maximum values and must not be applied continuously.

7.7.5 Dimension drawing

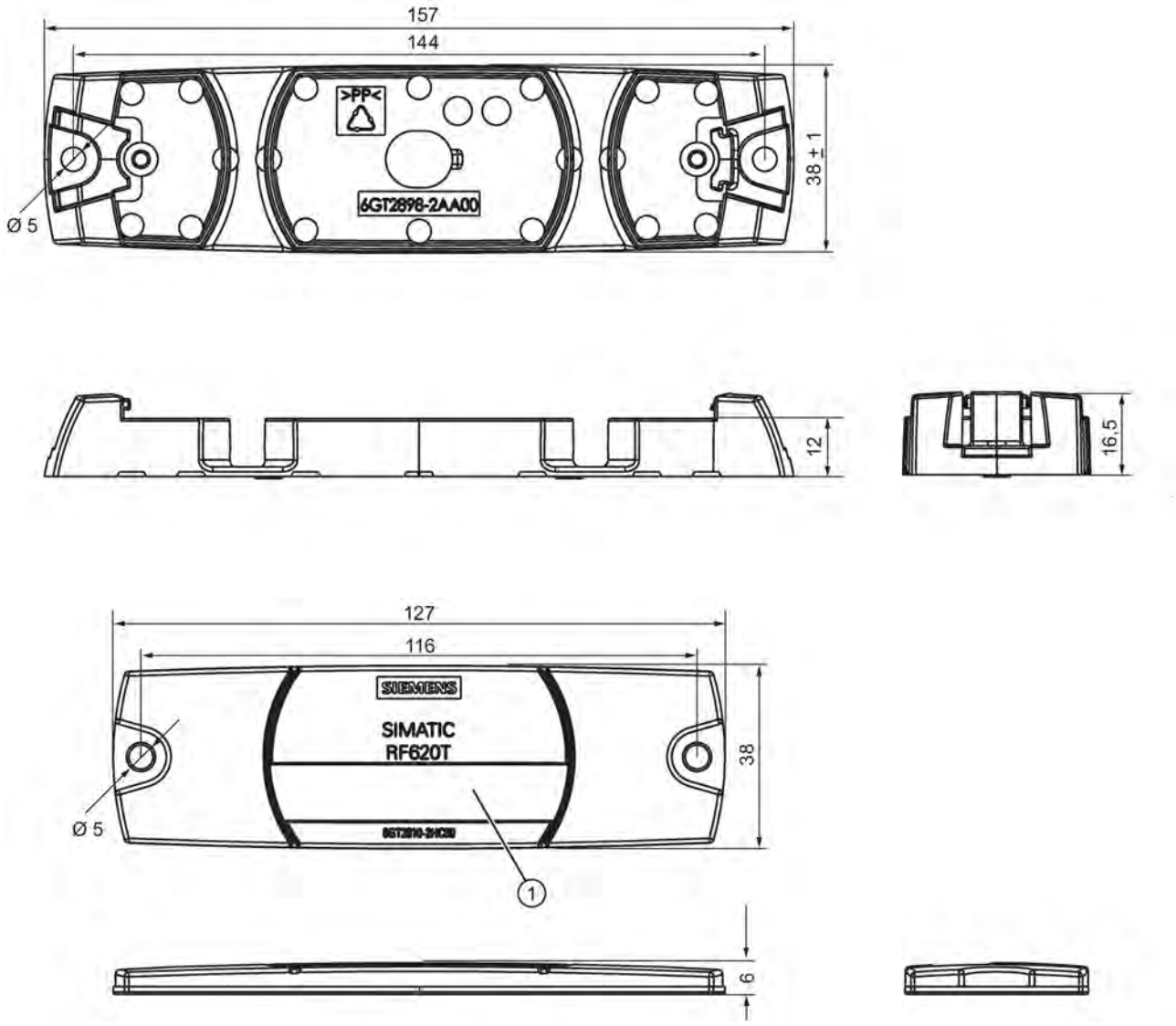

Figure 7-18 SIMATIC RF620T UHF container tag

Units of measurement: All dimensions in mm

Tolerances, unless indicated otherwise, are +-0.5 mm.

① Labeling area, see Section Characteristics (Page 399)

7.7.6 Certificates and approvals

Table 7- 24 6GT2810-2HC00 - RF620T

Certificate	Description
CE	Conformity with the RED directive 2014/53/EU Conformity with the RoHS directive 2011/65/EU

Table 7- 25 6GT2810-2HC80 - RF620T

Certificate	Description
FC Federal Communications Commission	Passive labels or transponders comply with the valid regulations; certification is not required.
UL C US	This product is UL-certified for the USA and Canada. It meets the following safety standard(s): • UL508 - Industrial Control Equipment • CSA C22.2 No. 142 - Process Control Equipment • UL Report E 120869

7.8 SIMATIC RF625T

7.8.1 Characteristics

The SIMATIC RF625T transponder is a passive, maintenance-free data carrier with a round design. It operates based on UHF Class 1 Gen 2 technology and is used to save the "Electronic Product Code" (EPC) of 96 bits/128 bits. The transponder also has a 512-bit user memory.

The areas of application are industrial asset management, RF identification of tools, containers and metallic equipment.

The Disk Tag is small and rugged and suitable for industrial applications with degree of protection IP68. It is highly resistant to oil, grease and cleaning agents.

Ideally, the SIMATIC RF625T is mounted directly on a flat metal surface of at least 150 mm diameter where it achieves a typical sensing distance of 1.5 m.

SIMATIC RF625T	Characteristics	
	Area of application	Identification tasks in rugged industrial environments
	Frequency range	• ETSI: 865 to 868 MHz • FCC: 902 to 928 MHz
	Air interface	According to ISO 18000-63
	Polarization	Linear
	Memory	• EPC: 96 / 128 bits • User memory: 64 bytes
	Read range	Max. 1.5 m [1)]
	Mounting	1 x M3 screw
	Mounting	Designed for direct mounting on conductive materials (preferably metal).

[1)] Depending on the environment, the reader/the antennas and the set power

7.8.2 Ordering data

Table 7- 26 Ordering data RF625T

Product	Article number
SIMATIC RF625T (ETSI)	6GT2810-2EE00
SIMATIC RF625T (FCC)	6GT2810-2EE01

Delivery format

SIMATIC RF625T is supplied in the following form:

- 10 transponders per packaging unit

  Minimum order quantity: 1 packaging unit (10 units)

7.8.3 Planning the use

7.8.3.1 Optimum antenna/transponder positioning with planar mounting of the transponder on metal

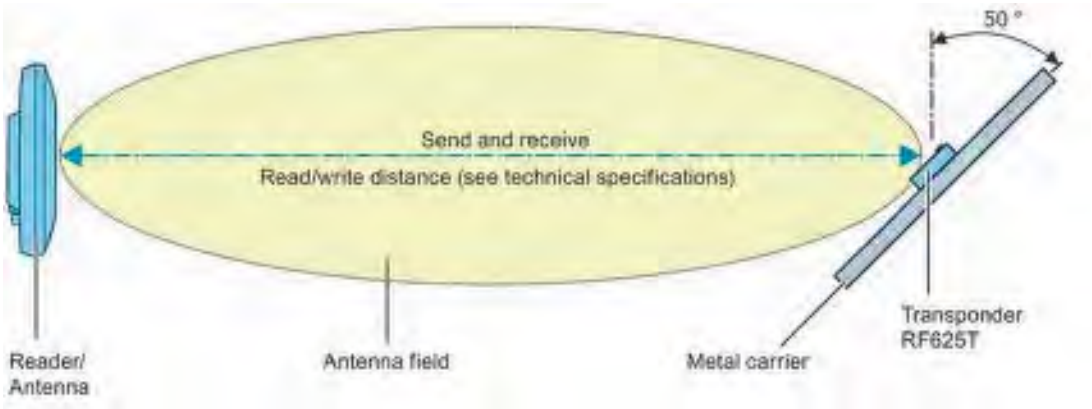

Figure 7-19 Example of optimum reader/antenna transponder positioning

The graphic shows an example of optimum positioning of the transponder relative to the reader or the antenna. This positioning is regardless of whether you are working with the internal reader antenna or with one of the external RF600 antennas.

7.8.3.2 Range when mounted on flat metallic carrier plates

The transponder generally has linear polarization. The polarization axis runs as shown in the diagram below. When using a circular antenna and when the transponder is centrally mounted on a plane metal plate, which may either be almost square or circular, it can be aligned in any direction. When using a linear antenna, the polarization axes of antenna and transponder must always be aligned in parallel.

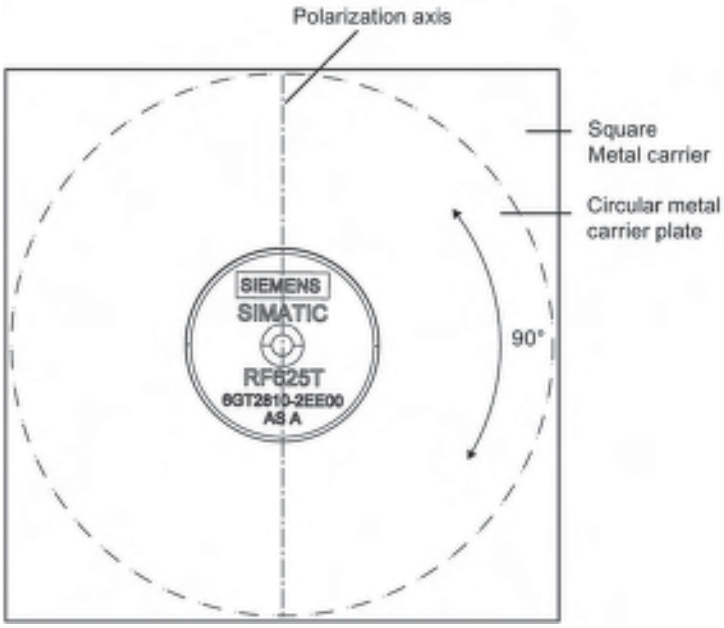

Figure 7-20 Optimum positioning of the transponder on a (square or circular) metal surface

Table 7- 27 Range on flat metallic carriers

Carrier material	Range
Metal plate of at least Ø 150 mm	100%
Metal plate Ø 120 mm	approx. 70%
Metal plate Ø 85 mm	approx. 60%
Metal plate Ø 65 mm	approx. 60%

On rectangular carrier plates, the range depends on the mounting orientation of the transponder.

You will find more information on the range in the section "Minimum distances and maximum ranges (Page 55)".

7.8.3.3 Range when mounted on non-metallic carrier materials

The transponder is generally designed for mounting on metallic objects which provide the conditions for the maximum reading ranges

Table 7- 28 Range with non-metallic carriers

Carrier material	Range
Transponder on wooden carrier	approx. 60%
Transponder on plastic carrier	approx. 65 %
Transponder on plastic mineral water bottle	approx. 70%
Transponder without base	approx. 50 %

The maximum range of 100% is achieved by mounting the transponder in a free space with low reflections on a flat metal carrier with a diameter of at least 150 mm.

You will find more detailed information on the range in the section "Minimum distances and maximum ranges (Page 55)".

7.8.3.4 Mounting in metal

It is possible to mount the transponder in metal. If there is not enough clearance to the surrounding metal, this reduces the reading range.

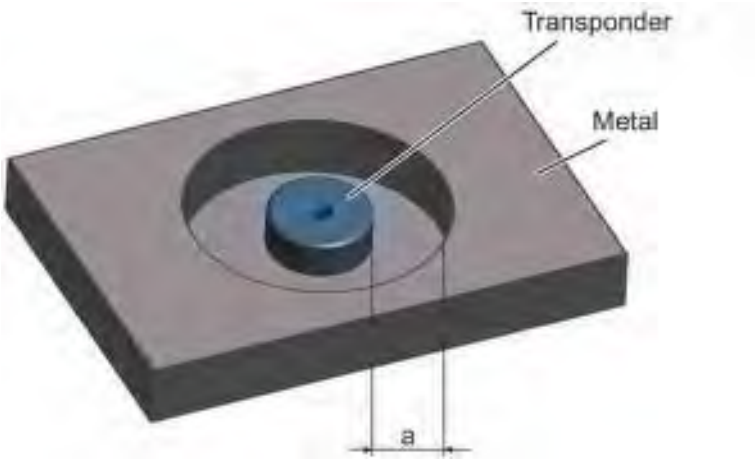

Clearance (all-round)	Reading range [1)]
a = 5 mm	Approx. 50 %
a = 10 mm	Approx. 70%

[1)] The read range information applies when the transponder is mounted on a metallic carrier with a diameter of at least 150 mm.

Figure 7-21 Flush-mounting of RF625T in metal

7.8.4 Technical specifications

Table 7- 29 Technical specifications of the transponder SIMATIC RF625T

	6GT2810-2EE0x
Product type designation	SIMATIC RF625T
Radio frequencies	
Operating frequency	
• ETSI	• 865 to 868 MHz
• FCC	• 902 ... 928 MHz [1)]
Memory	
Chip (manufacturer/type)	IMPINJ / MONZA 4QT
Memory type	EEPROM
Memory configuration	
• EPC	• 12 ... 16 bytes / 96 ... 128 bits
• User memory	• 64 bytes / 512 bits
• TID	• 4 bytes / 32 bits
• Reserved (passwords)	• 64 bytes / 512 bits
Number of write cycles (< 40 °C)	> 10^{14}
Number of read cycles (< 40 °C)	> 10^{5}
Data retention time (< 40 °C)	22 years
Electrical data	
Range	≤ 1.5 m [2)]
Protocol	ISO 18000-63
Transmission speed	≤ 320 kbps
Polarization	Linear
Mechanical specifications	
Material	PA6.6
Silicone-free	Yes
Color	Black
Antenna material	Aluminum
Type of antenna	Shortened dipole
Printing	No

	6GT2810-2EE0x
Permitted ambient conditions	
Ambient temperature	
• In operation, during write/read access	• -25 ... +85 °C
• In operation, outside write/read access	• -40 ... +125 °C
• During transportation and storage	• -40 … +125 °C
Distance from metal	0 mm Designed for mounting directly on metal
Degree of protection	IP68 / IPx9K
Resistance to mechanical stress	Torsion and bending stress is not permitted
Shock-resistant according to DIN EN 60721-3-7, Class 7 M3	100 g [3]
Vibration to EN 60068-2-6	50 g [3]
Design, dimensions and weight	
Dimensions (∅ × D)	30 × 8 mm
Weight	6 g
Type of mounting	1 x M3 countersunk screw ≤ 0.5 Nm
Standards, specifications, approvals	
MTBF	1141 years

[1] The range is reduced to 70% at the band limits 902 MHz or 928 MHz. Due to frequency fluctuations, this effect has no impact.

[2] Mounting on a flat metal surface with a diameter of at least 150 mm and at room temperature. The information relates to the maximum read range. You will find more information on ranges in the section "Minimum distances and maximum ranges (Page 55)". When these minimum distances are not achieved, there is a reduction in the maximum possible read and write distances of the transponder.

[3] The values for shock and vibration are maximum values and must not be applied continuously.

7.8.5 Dimension drawing

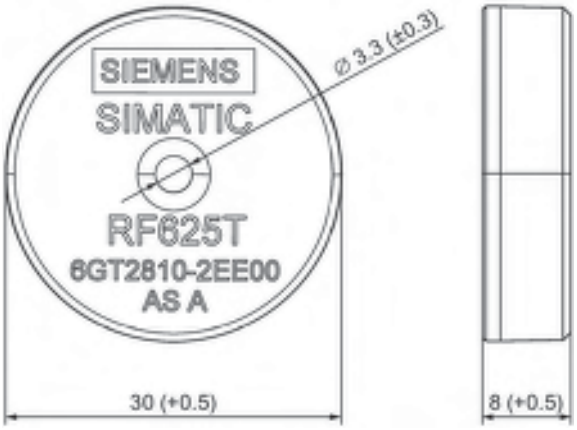

Figure 7-22 SIMATIC RF625T UHF Disk Tag

Units of measurement: All dimensions in mm

7.8.6 Certificates and approvals

Table 7- 30 6GT2810-2EE00 - RF625T

Certificate	Description
CE	Conformity with the RED directive 2014/53/EU Conformity with the RoHS directive 2011/65/EU

Table 7- 31 6GT2810-2EE01 - RF625T

Certificate	Description
FC Federal Communications Commission	Passive labels or transponders comply with the valid regulations; certification is not required
C UL US	This product is UL-certified for the USA and Canada. It meets the following safety standard(s): • UL508 - Industrial Control Equipment • CSA C22.2 No. 142 - Process Control Equipment • UL Report E 120869

7.9 SIMATIC RF630T

7.9.1 Characteristics

The SIMATIC RF630T transponder is a passive (i.e. battery-free) and maintenance-free, cylindrical data carrier. It operates based on UHF Class 1 Gen 2 technology and is used to save the "Electronic Product Code" (EPC) of 96 bits/240 bits. The transponder also has a 512-bit user memory.

Areas of application include the mounting of metallic components (e.g. engine assembly in the automobile industry) as well as RF identification of tools, containers and metal frames.

The RF630T is small and rugged and suitable for industrial applications with IP68/IPX9K degree of protection. It is highly resistant to oil, grease and cleaning agents.

The SIMATIC RF630T is mounted directly onto metal surfaces to ensure optimum functioning.

SIMATIC RF630T	Characteristics	
	Area of application	Identification tasks in rugged industrial environments
	Frequency range	• ETSI: 865 to 868 MHz • FCC: 902 to 928 MHz
	Air interface	According to ISO 18000-63
	Polarization	Linear
	Memory	• EPC: 96 ... 240 bits • User memory: 64 bytes
	Read range	Max. 1.2 m [1]
	Mounting	Screw-in
	Mounting	Designed for direct mounting on conductive materials (preferably metal).

[1] Depending on the environment, the reader/the antennas and the set power

7.9.2 Ordering data

Table 7- 32 Ordering data RF630T

Product	Article number
SIMATIC RF630T (ETSI)	6GT2810-2EC00
SIMATIC RF630T (FCC)	6GT2810-2EC10

Delivery format

SIMATIC RF630T is supplied in the following form:

- 10 transponders per packaging unit

  Minimum order quantity: 1 packaging unit (10 units)

7.9.3 Planning application

7.9.3.1 Optimum antenna/transponder positioning

The maximum reading range is achieved when the reader antenna is positioned at right angles to the mounting surface. In the case of parallel mounting directly above the transponder, detection is not possible.

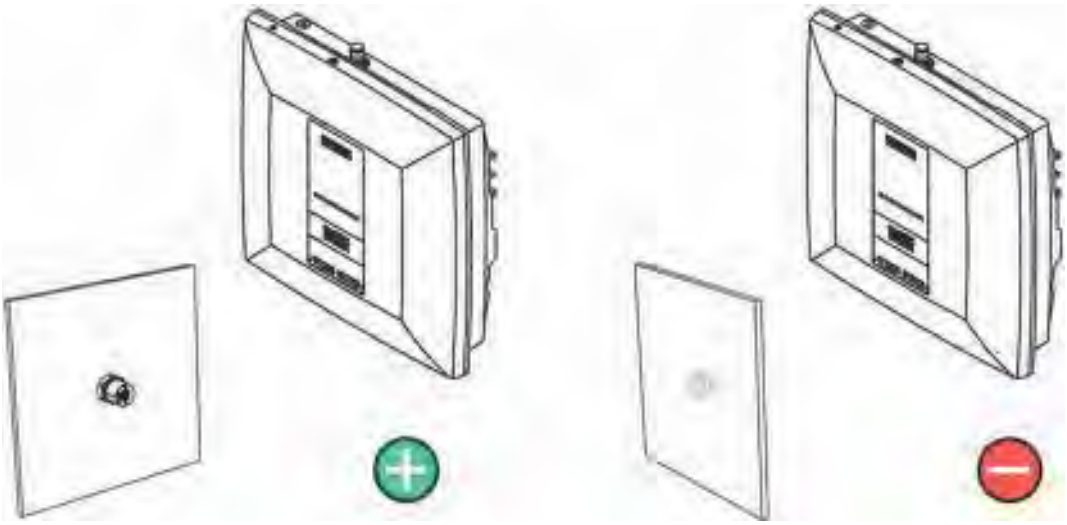

Optimum alignment of the transponder to the transmitting antenna

Incorrect alignment of the transponder to the transmitting antenna

Application example

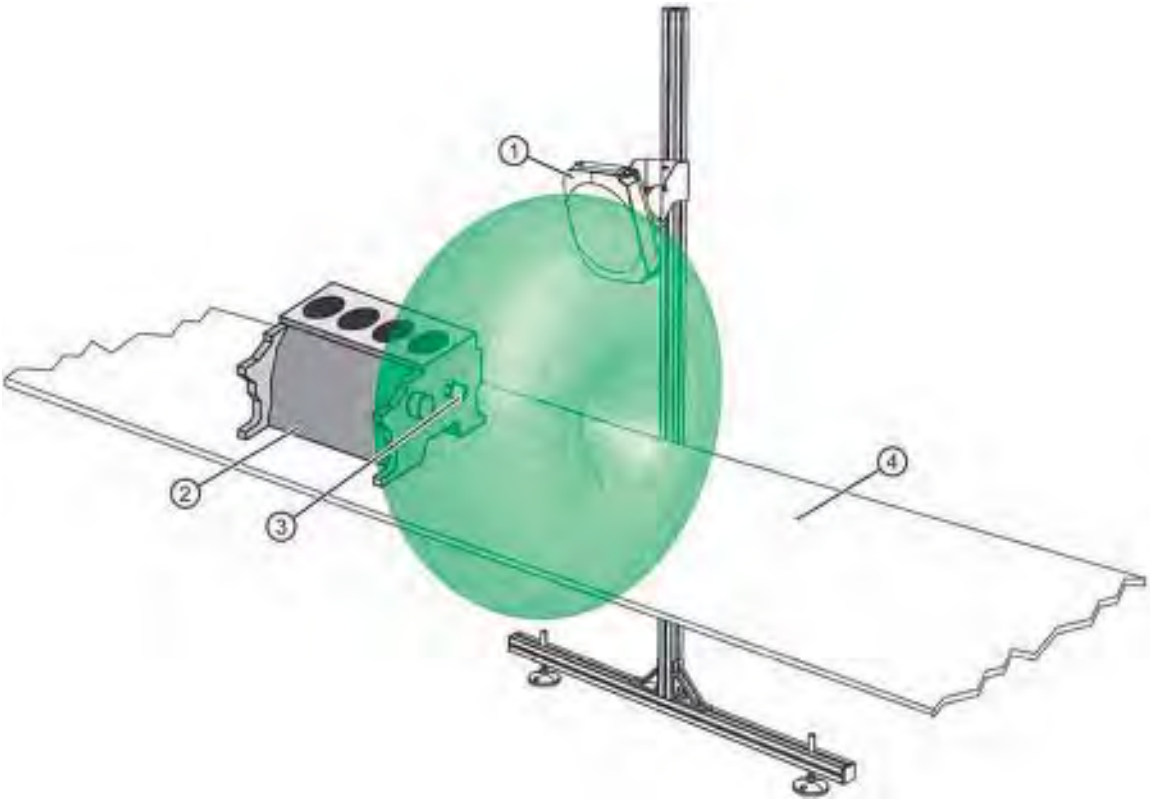

① Antenna
② Object made of metal (e.g. motor block)
③ Transponder
④ Conveyor belt

Figure 7-23 RF630T application example

7.9.3.2 Range when mounted on flat metallic carrier plates

The transponder generally has linear polarization. The polarization axis runs as shown in the diagram below. If the tag is mounted in the center of a flat metal plate, which is either approximately square or circular, it can be aligned in any direction since the transmitting and receiving RF660A antennas operate with circular polarization.

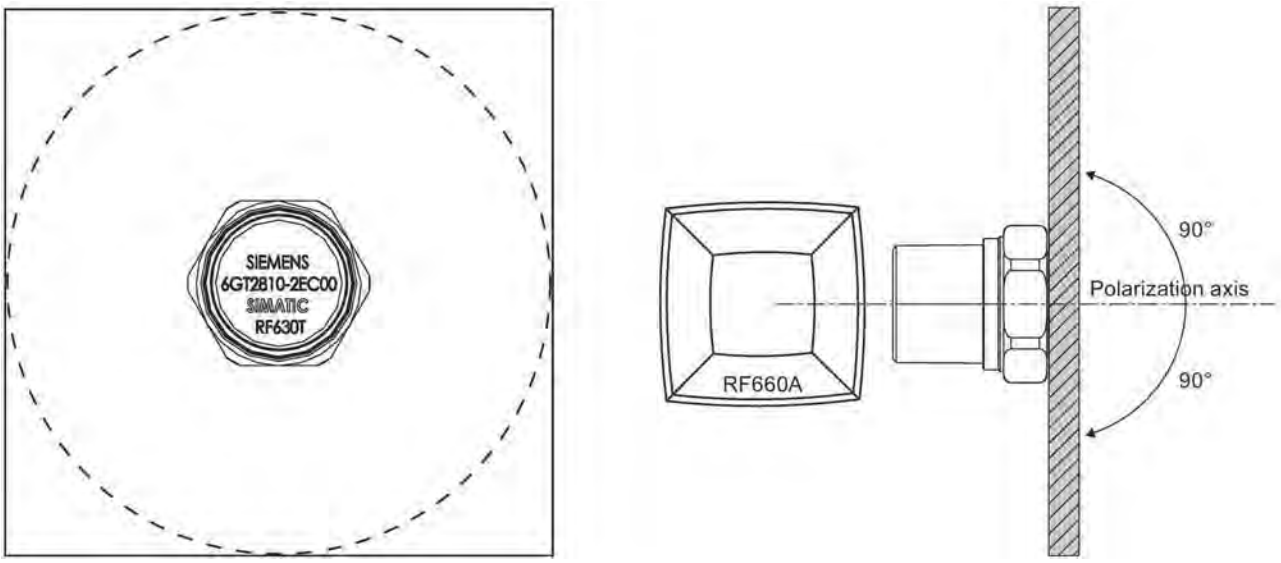

Figure 7-24 Optimum positioning of the transponder on a (square or circular) metal surface

Table 7- 33 Range on flat metallic carriers

Carrier material	Range
Metal plate of at least Ø 300 mm	100 %
Metal plate Ø 150 mm	approx. 75 %
Metal plate Ø 120 mm	approx. 50 %
Metal plate Ø 85 mm	approx. 40%

On rectangular carrier plates, the range depends on the mounting orientation of the transponder

You will find more detailed information on the range in the section "Minimum distances and maximum ranges (Page 55)".

7.9.4 Technical specifications

Table 7- 34 Technical specifications of the transponder SIMATIC RF630T

	6GT2810-2EC0x
Product type designation	SIMATIC RF630T
Radio frequencies	
Operating frequency	
• ETSI	• 865 to 868 MHz
• FCC	• 902 ... 928 MHz [1)]
Memory	
Chip (manufacturer/type)	NXP / G2XM
Memory type	EEPROM
Memory configuration	
• EPC	• 12 ... 30 bytes / 96 ... 240 bits
• User memory	• 64 bytes / 512 bits
• TID	• 8 bytes / 64 bits
Number of write cycles (< 40 °C)	> 10^{14}
Number of read cycles (< 40 °C)	> 10^{5}
Data retention time (< 40 °C)	10 years
Electrical data	
Range	≤ 2 m [2)]
Protocol	ISO 18000-63
Transmission speed	≤ 320 kbps
Polarization	Linear
Mechanical specifications	
Material	PA6.6 GF
Silicone-free	Yes
Color	Black/silver
Antenna material	Aluminum
Type of antenna	Shortened dipole
Printing	No

	6GT2810-2EC0x
Permitted ambient conditions	
Ambient temperature	
• In operation, during write/read access	• -25 ... +85 °C
• In operation, outside write/read access	• -40 ... +125 °C
• During transportation and storage	• -40 … +125 °C
Distance from metal	0 mm Designed for mounting directly on metal
Degree of protection	IP68 / IPx9K
Resistance to mechanical stress	Torsion and bending stress is not permitted
Shock-resistant according to DIN EN 60721-3-7, Class 7 M3	100 g [3)]
Vibration to EN 60068-2-6	20 g [3)]
Design, dimensions and weight	
Dimensions (∅ × D)	21 × 20 mm
Weight	22 g
Type of mounting	Screw-in, SW 19 mm ≤ 6 Nm
Standards, specifications, approvals	
MTBF	1712 years

[1)] The range is reduced to 70% at the band limits 902 MHz or 928 MHz. Due to frequency fluctuations, this effect has no impact.

[2)] Mounting on a flat metal surface with a diameter of at least 150 mm and at room temperature. The information relates to the maximum read range. You will find more information on ranges in the section "Minimum distances and maximum ranges (Page 55)".

[3)] The values for shock and vibration are maximum values and must not be applied continuously.

7.9.5 Dimension drawing

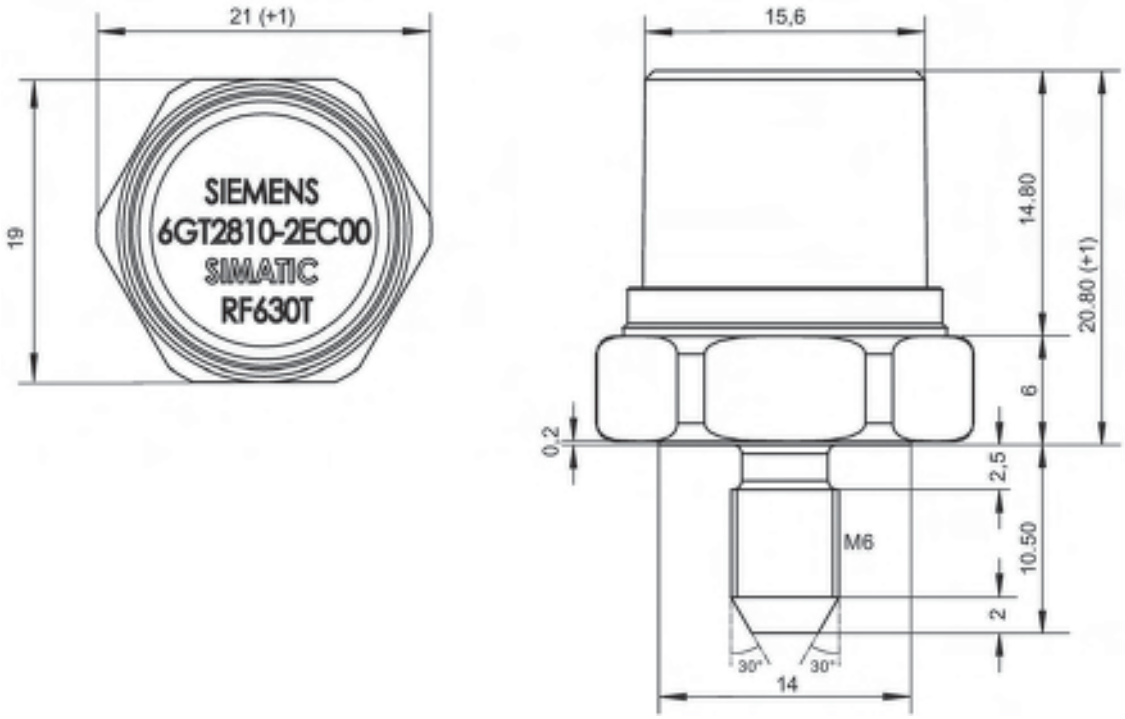

Figure 7-25 SIMATIC RF630T

Units of measurement: All dimensions in mm

General tolerances in accordance with DIN ISO 2768f.

7.9.6 Certificates and approvals

Table 7- 35 6GT2810-2EC00 - RF630T

Certificate	Description
CE	Conformity with the RED directive 2014/53/EU Conformity with the RoHS directive 2011/65/EU

Table 7- 36 6GT2810-2EC10 - RF630T

Standard	
FC Federal Communications Commission	Passive labels and transponders comply with the valid regulations; certification is not required.
UL C US	This product is UL-certified for the USA and Canada. It meets the following safety standard(s): • UL508 - Industrial Control Equipment • CSA C22.2 No. 142 - Process Control Equipment • UL Report E 120869

7.10 SIMATIC RF640T

7.10.1 Characteristics

SIMATIC RF640T transponder is a passive (i.e. battery-free) and maintenance-free, round-shaped data carrier. It operates based on UHF Class 1 Gen 2 technology and is used to save the "Electronic Product Code" (EPC) of 96 bits/240 bits. The transponder also has a 512-bit user memory.

The areas of application are industrial asset management, RF identification of tools, containers and metallic equipment.

The tool tag is small and rugged and suitable for industrial applications with degree of protection IP68. It is highly resistant to oil, grease and cleaning agents.

SIMATIC RF640T should preferably be mounted directly on a flat metal surface of at least 150 mm in diameter.

SIMATIC RF640T	Characteristics	
	Area of application	Identification tasks in rugged industrial environments Suitable for use in hazardous areas.
	Frequency range	• ETSI: 865 to 868 MHz • FCC: 902 to 928 MHz
	Air interface	According to ISO 18000-63
	Polarization	Linear
	Memory	• EPC: 96 ... 240 bits • User memory: 64 bytes
	Read range	Max. 4.0 m [1]
	Mounting	2 x M4 screws
	Mounting	Designed for direct mounting on conductive materials (preferably metal).

[1] Depending on the environment, the reader/the antennas and the set power

7.10.2 Ordering data

Table 7- 37 RF640T ordering data

Product	Article number
SIMATIC RF640T (ETSI)	6GT2810-2DC00
SIMATIC RF640T (FCC)	6GT2810-2DC10

Delivery format

SIMATIC RF640T is supplied in the following form:

- 10 transponders per packaging unit

  Minimum order quantity: 1 packaging unit (10 units)

7.10.3 Planning the use

7.10.3.1 Optimum antenna/transponder positioning with plane mounting of the transponder on metal

Example of optimum antenna/transponder positioning

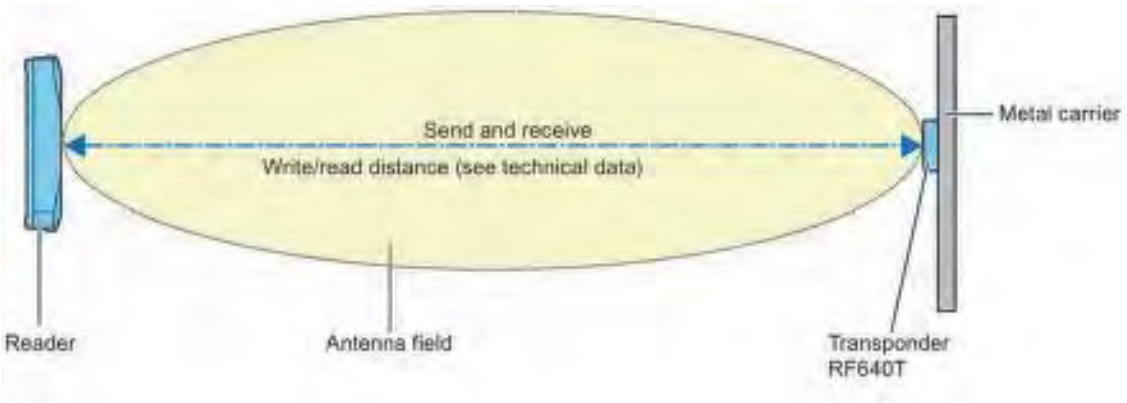

Figure 7-26 Example of optimum antenna/transponder positioning with RF600 readers and an RF600 antenna

Note that reflections may occur with large metal surfaces. These can be minimized by changing the radiation angle.

7.10.3.2 Range when mounted on flat metallic carrier plates

The transponder generally has linear polarization. The polarization axis runs as shown in the diagram below. If the tag is mounted in the center of a flat metal plate, which is either approximately square or circular, it can be aligned in any direction since the transmitting and receiving RF660A antennas operate with circular polarization.

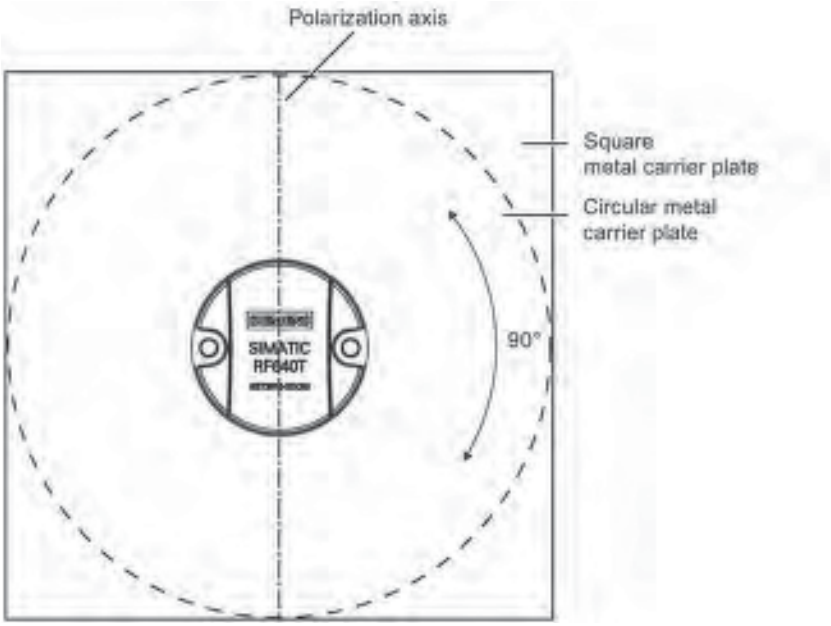

Figure 7-27 Optimum positioning of the transponder on a (square or circular) metal surface

Table 7- 38 Range on flat metallic carriers

Carrier material	Range
Metal plate of at least Ø 150 mm	100 %
Metal plate Ø 120 mm	approx. 80%
Metal plate Ø 85 mm	approx. 55%
Metal plate Ø 65 mm	approx. 40%

On rectangular carrier plates, the range depends on the mounting orientation of the transponder

You will find more detailed information on the range in the section "Minimum distances and maximum ranges (Page 55)".

7.10.3.3 Range when mounted on non-metallic carrier materials

The transponder is generally designed for mounting on metallic objects which provide the conditions for the maximum reading ranges

Table 7- 39 Range with non-metallic carriers

Carrier material	Range
Transponder on wooden carrier	approx. 40%
Transponder on plastic carrier	approx. 35%
Transponder on plastic mineral water bottle	approx. 55%
Transponder without base	approx. 30%

The maximum range of 100% is achieved by mounting the transponder in a free space with low reflections on a flat metal carrier with a diameter of at least 150 mm.

You will find more detailed information on the range in the section "Minimum distances and maximum ranges (Page 55)".

7.10.3.4 Use of the transponder in hazardous areas

TÜV NORD CERT GmbH, appointed center no. 0044 as per Article 9 of the Directive 94/9/EC of the European Council of 23 March 1994, has confirmed the compliance with the essential health and safety requirements relating to the design and construction of equipment and protective systems intended for use in hazardous areas as per Annex II of the Directive.

The essential health and safety requirements are satisfied in accordance with standards EN 60079-0: 2012 + A11: 2013 and EN 60079-11: 2012.

This allows the RF640T transponder to be used in hazardous areas for gases, for the device category 2G and gas group IIB, or alternatively in hazardous areas for dusts, for the device category 2D and group IIIB.

Note

Readability of the serial number on the type plate

When using the transponder, make sure that the serial number can be read. The serial number is lasered and can be hidden by paint or other materials making it illegible.

The customer is responsible for making sure that the serial number of a transponder for the hazardous area can be read at all times.

Identification

The identification is as follows:

II 2 G Ex ib IIB T6 ... T3 Gb or.

II 2 D Ex ib IIIB T* °C Db

7.10.3.5 Use of the transponder in hazardous areas for gases

Note

Transponder labeling

The labeling of the front of the transponder shown above is an example and can vary between batches produced at different times.

This does not affect the hazardous area marking.

Temperature class grading for gases

The temperature class of the transponder for hazardous atmospheres (gases) depends on the ambient temperature and the radiated power of an antenna in the 865 - 868 MHz frequency band within the hazardous area.

WARNING

Ignitions of gas-air mixtures

When using the RF640T transponder, check that the temperature class is adhered to in keeping with the requirements of the area of application.

Non-compliance with the permitted temperature ranges while using the transponder can lead to ignitions of gas-air mixtures.

WARNING

Ignitions of gas-air mixtures

The maximum transmitting power of the transmitter used to operate the transponder must not exceed 2 W.

Non-compliance with the permissible transmitting power can lead to ignitions of gas-air mixtures.

Temperature class assignment for gases and a radiated power less than 100 mW ERP

If the radiated power of an antenna radiating into the hazardous area or located in the hazardous area and operating in the 865 - 868 MHz frequency band cannot exceed the value 100 mW, the temperature class assignment is as follows:

Ambient temperature range	Temperature class
-25 °C to +85 °C	T5
-25 °C ... +74 °C	T6

Temperature class assignment for gases and a radiated power less than 500 mW ERP

If the radiated power of an antenna radiating into the hazardous area or located in the hazardous area and operating in the 865 - 868 MHz frequency band cannot exceed the value 500 mW, the temperature class assignment is as follows:

Ambient temperature range	Temperature class
-25 °C to +85 °C	T4
-25 °C to +65 °C	T5
-25 °C to +50 °C	T6

Temperature class assignment for gases and radiated power for 2000 mW ERP

If the radiated power of an antenna radiating into the hazardous area or located in the hazardous area and operating in the 865 - 868 MHz frequency band cannot exceed the value 2000 mW, the temperature class assignment is as follows:

Ambient temperature range	Temperature class
-25 °C to +85 °C	T3
-25 °C to +85 °C	T4
-25 °C ... +30 °C	T5
--	T6

Temperature class assignment for gases and a radiated power of 10 mW to 2000 mW ERP

If the radiated power of an antenna radiating into the hazardous area or of an antenna located in the hazardous area in the 865 - 868 MHz frequency band cannot exceed the radiated power selected in the following diagram, the maximum permitted ambient temperature range can be found in the corresponding temperature function of the diagram. This makes the following temperature class assignment valid:

Ambient temperature range	Temperature class
-25 °C to +85 °C	T2
-25 °C to +85 °C	T3
-25 °C to +85 °C	T4
-25 °C to T_{max} (T5) °C	T5
-25 °C to T_{max} (T6) °C	T6

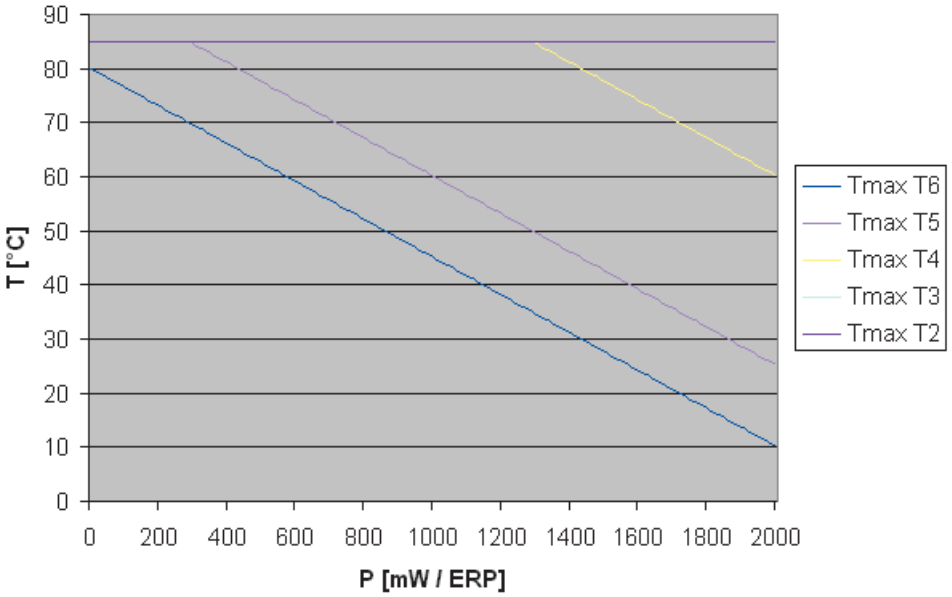

Figure 7-28 Maximum permitted ambient temperature depending on the radiated power

7.10.3.6 Use of the transponder in hazardous areas for dusts

The equipment is suitable for dusts whose ignition temperatures for a dust layer of 5 mm are higher than 210 °C (smoldering temperature). The ignition temperature specified here according to IEC 60079-0: 2011 for ignition protection type ib in this case references the smoldering temperature of a layer of combustible flyings (ib IIIA) or alternatively non-conductive dusts (ib IIIB).

Temperature class grading for dusts

WARNING

Ignitions of dust-air mixtures

When using the RF640T transponder, check that the temperature values are adhered to in keeping with the requirements of the area of application.

Non-compliance with the permitted temperature ranges while using the transponder can lead to ignitions of dust-air mixtures.

Temperature class assignment for dusts and a radiated power less than 100 mW ERP

If the radiated power of an antenna radiating into the hazardous area or located in the hazardous area and operating in the 865 - 868 MHz frequency band cannot exceed the value 100 mW, the temperature class assignment is as follows:

Ambient temperature range	Temperature value
-25 °C ≤ Ta ≤ +85 °C	T96 °C

Temperature class assignment for dusts and a radiated power less than 500 mW ERP

If the radiated power of an antenna radiating into the hazardous area or located in the hazardous area and operating in the 865 - 868 MHz frequency band cannot exceed the value 500 mW, the temperature class assignment is as follows:

Ambient temperature range	Temperature value
-25 °C ≤ Ta ≤ +85 °C	T120 °C

Temperature class assignment for dusts and a radiated power less than 1280 mW ERP

If the radiated power of an antenna radiating into the hazardous area or located in the hazardous area and operating in the 865 - 868 MHz frequency band cannot exceed the value 1280 mW, the temperature class assignment is as follows:

Ambient temperature range	Temperature value
-25 °C ≤ Ta ≤ +85 °C	T135 °C

Ambient temperature range for dust and radiated power of 2000 mW ERP

If the radiated power of an antenna radiating into the hazardous area or located in the hazardous area and operating in the 865 - 868 MHz frequency band cannot exceed the value 2000 mW, the temperature class assignment is as follows:

Ambient temperature range	Temperature value
-25 °C ≤ Ta ≤ +60 °C	T135 °C

Temperature class assignment for dusts and a radiated power of 10 mW ERP to 2000 mW ERP

If the radiated power of an antenna radiating into the hazardous area or located in the hazardous area and operating in the 865 - 868 MHz frequency band can be between the values 10 mW ERP and 1280 mW ERP, the temperature class assignment is as follows:

Ambient temperature range	Temperature value
-25 °C ≤ Ta ≤ +85 °C	T_{value} °C [1]

[1] See diagram, blue line

If the radiated power of an antenna radiating into the hazardous area or located in the hazardous area and operating in the 865 - 868 MHz frequency band can be between the values 1280 mW ERP and 2000 mW ERP, the temperature class assignment is as follows:

Ambient temperature range	Temperature value
-25 °C ≤ Ta ≤ $T_{max.\ Ambient}$ °C [1]	135°C

[1] See diagram, orange line

WARNING

Ignitions of dust-air mixtures

Using the RF640T transponder with radiant power greater than 1280 mW ERP requires compliance with the reduced maximum ambient temperature (see diagram) for maintaining the maximum temperature value of 135 °C.

Non-compliance with the permitted temperature ranges while using the transponder can lead to ignitions of dust-air mixtures.

The respective temperature value and the maximum allowed ambient temperature in relation to the radiated power of the antenna is shown in the diagram below:

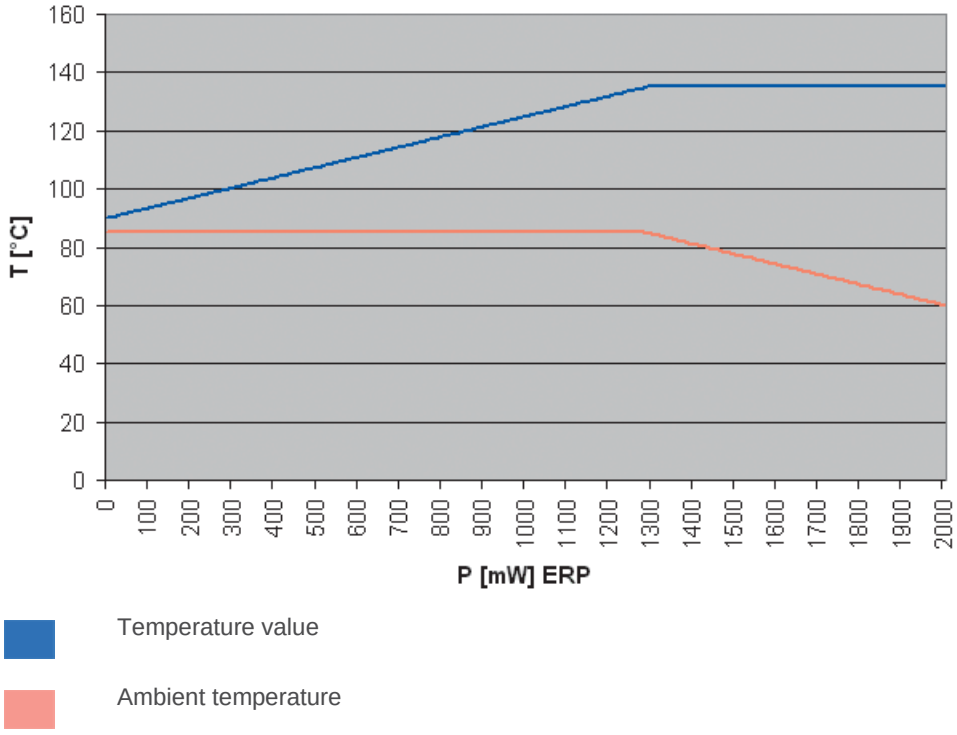

Figure 7-29 Temperature value and maximum permitted ambient temperature in relation to the radiated power

7.10.4 Technical specifications

Table 7- 40 Technical specifications of the transponder SIMATIC RF640T

	6GT2810-2DC0x
Product type designation	SIMATIC RF640T
Radio frequencies	
Operating frequency	
• ETSI	• 865 to 868 MHz
• FCC	• 902 ... 928 MHz [1)]
Memory	
Chip (manufacturer/type)	NXP / G2XM
Memory type	EEPROM
Memory configuration	
• EPC	• 12 ... 30 bytes / 96 ... 240 bits
• User memory	• 64 bytes / 512 bits
• TID	• 8 bytes / 64 bits
• Reserved (passwords)	• 8 bytes / 64 bits
Number of write cycles (< 40 °C)	> 10^{14}
Number of read cycles (< 40 °C)	> 10^{5}
Data retention time (< 40 °C)	10 years
Electrical data	
Range	≤ 4 m [2)]
Protocol	ISO 18000-63
Transmission speed	≤ 320 kbps
Polarization	Linear
Mechanical specifications	
Material	PA12
Silicone-free	Yes
Color	Anthracite
Printing	No

	6GT2810-2DC0x
Permitted ambient conditions	
Ambient temperature	
• In operation, during write/read access	• -25 ... +85 °C [3]
• In operation, outside write/read access	• -40 ... +125 °C
• During transportation and storage	• -40 … +125 °C
Distance from metal	0 mm Designed for mounting directly on metal
Degree of protection	IP68 / IPx9K
Resistance to mechanical stress	Torsion and bending stress is not permitted
Shock-resistant according to DIN EN 60721-3-7, Class 7 M3	100 g [4]
Vibration to EN 60068-2-6	20 g [4]
Design, dimensions and weight	
Dimensions (∅ × D)	50 × 8 mm
Weight	13 g
Type of mounting	2 x M4 screws ≤ 1.2 Nm
Standards, specifications, approvals	
Proof of suitability	Ex: II 2 G Ex ib IIB T6 ... T3 Gb, II 2 D Ex ib IIIB T* °C Db, -25 °C < Ta°< +85 °C
MTBF	1757 years

[1] The range is reduced to 70% at the band limits 902 MHz or 928 MHz. Due to frequency fluctuations, this effect has no impact.

[2] Mounting on a flat metal surface with a diameter of at least 150 mm and at room temperature. The information relates to the maximum read range. You will find more information on ranges in the section "Minimum distances and maximum ranges (Page 55)".

[3] To use the transponder in hazardous areas, directive 94/9/EC of the European Council of 23 March 1994 must be complied with. Note the information in the section "Use of the transponder in hazardous areas (Page 424)".

[4] The values for shock and vibration are maximum values and must not be applied continuously.

Note

Effects of temperatures > 70 °C

Note that in temperature ranges > 70 °C, the transponder can become slightly deformed. However, this has no effect on the transponder function.

WARNING

Ignitions of gas-air or dust-air mixtures

When using the RF640T transponder, check to ensure that the temperature values are observed in respect of the requirements of the hazardous area of application.

Non-compliance with the permitted temperature ranges while using the transponder can lead to ignitions of gas-air or dust-air mixtures.

Note

Damage to the surface of the housing

The values specified for the IP x9K test are maximum values and must not be applied continuously.

Protracted loading of the transponder can lead to damage to the surface of the housing due to high pressures.

7.10.5 Dimension drawing

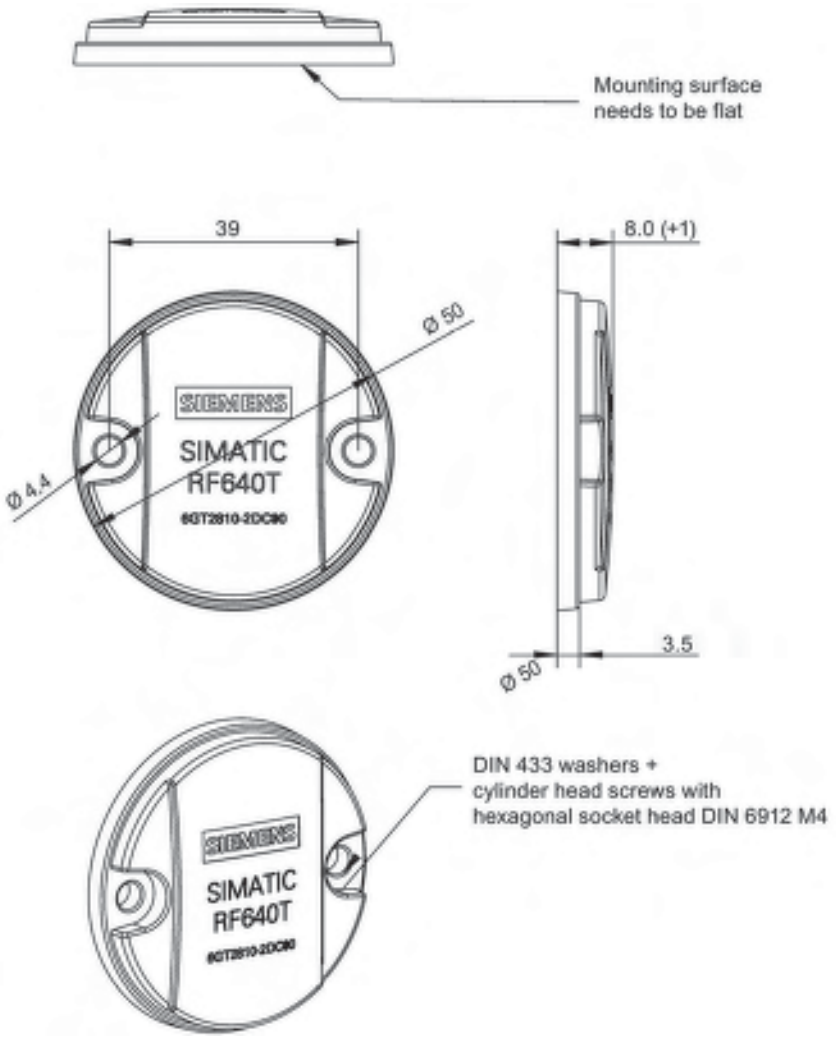

Figure 7-30 SIMATIC RF640T

Units of measure: All dimensions in mm

7.10.6 Certificates and approvals

Table 7- 41 6GT2810-2DC00 - RF640T

Certificate	Description
CE	Conformity with the RED directive 2014/53/EU Conformity with the RoHS directive 2011/65/EU Conformity with the ATEX directive 2014/34/EU

Table 7- 42 6GT2810-2DC10 - RF640T

Standard	
FC Federal Communications Commission	Passive labels or transponders comply with the valid regulations; certification is not required.
UL C US	This product is UL-certified for the USA and Canada. It meets the following safety standard(s): UL 60950-1 - Information Technology Equipment Safety - Part 1: General Requirements CSA C22.2 No. 60950 -1 - Safety of Information Technology Equipment UL Report E 205089

ATEX certification

The type test certification for the RF640T is stored by TÜV 07 ATEX 346241 / Version 1. On the basis of this certification, the CE declaration by the manufacturer has been made according to directive 94/9/EC.
The producing factory of the RF640T has an ATEX quality assurance system recognized by the DEKRA EXAM GmbH with notice number BVS 11 ATEX ZQS/E111.

Manufacturer's address - distributor

Siemens Aktiengesellschaft (PD PA CI)
Process Industries and Drives Division
Process Automation
Industrial Communication and Identification
D-76181 Karlsruhe, Germany

Manufacturer's address - factory

Siemens Aktiengesellschaft (DF FA CE)
Digital Factory
Factory Automation
Control Components and System Engineering
Breslauer Straße 5
D-90766 Fürth, Germany

7.11 SIMATIC RF645T

7.11.1 Characteristics

SIMATIC RF645T is a passive and maintenance-free on-metal data storage medium. It is specially designed for mounting directly on metal surfaces. It operates based on UHF Class 1 Gen 2 technology and is used to save the "Electronic Product Code" (EPC) up to 448 bits. The transponder also has 2048 bits of user memory.

SIMATIC RF645T	Characteristics	
	Area of application	The areas of application are industrial asset management, RF identification of tools, containers and metallic equipment.
	Frequency range	• ETSI: 865 to 868 MHz • FCC: 902 to 928 MHz
	Air interface	According to ISO 18000-63
	Memory	• EPC: 56 bytes / 448 bits • User memory: 256 bytes / 2048 bits
	Read range	Max. 6.0 m [1)]
	Mounting	• Glued • Mounting cover (M4) • Retaining bracket (M5)
	Mounting	Designed for direct mounting on conductive materials (preferably metal).

1) Depending on the environment, the reader/the antennas and the set power

7.11.2 Ordering data

Table 7- 43 Ordering data

Product	Article number
SIMATIC RF645T	6GT2810-2HC05
Mounting cover for SIMATIC RF645T	6GT2898-5AA00
Retaining bracket for SIMATIC RF645T	6GT2898-5AB00

Delivery format

The SIMATIC RF645T is supplied in the following form:

- 20 transponders per packaging unit

  Minimum order quantity: 1 packaging unit (20 units)

The mounting cover for SIMATIC RF645T is supplied in the following form:

- Minimum order quantity: 1 packaging unit (20 units)

The retaining bracket for SIMATIC RF645T is supplied in the following form:

- Minimum order quantity: 1 packaging unit (20 units)

7.11.3 Technical specifications

Table 7- 44 Technical specifications of SIMATIC RF645T

	6GT2810-2HC05
Product designation	SIMATIC RF645T
Radio frequency	
Operating frequency (broadband)	
• ETSI	• 865 to 868 MHz
• FCC, CMIIT and others	• 902 to 928 MHz
Memory	
Chip (manufacturer/type)	NXP / UCODE 7xm-2k
Memory configuration	
• EPC	• 56 bytes / 448 bits
• User memory	• 256 bytes / 2048 bits
• TID	• 12 bytes / 96 bits
Number of write cycles (< 40 °C)	> 100 000
Number of read cycles (< 40 °C)	> 10^{14}
Data retention time (< 40 °C)	20 years
Electrical data	
Read range (on the metallic support)	≤ 6 m [1)]
Protocol	ISO 18000-63
Transmission speed	≤ 320 kbps
Polarization	Linear (long side = polarization axis)

	6GT2810-2HC05
Mechanical specifications	
Material	Plastic (ABS)
Silicone-free	Yes
Color	Black
Antenna material	Aluminum
Printing	No
Permitted ambient conditions	
Ambient temperature	
• In operation, during write/read access	• -40 ... +85 °C
• In operation, outside write/read access	• -40 ... +85 °C
• During transportation and storage	• -40 ... +85 °C
Distance from metal	0 mm Designed for mounting directly on metal
Degree of protection	IP68
Shock according to DIN EN 60721-3-7 Class 7 M3 [2]	500 m/s²
Vibrations according to EN 60068-2-6 [2]	200 m/s²
Resistance to mechanical stress	Not permitted
Design, dimensions and weight	
Dimensions (L x W x H)	52 (±0.5) × 36 (±0.5) × 12.5 mm
Weight	Approx. 25 g
Type of mounting	• Glued • Mounting cover (M4) • Retaining bracket (M5)

[1] Depending on the environment

[2] The values for shock and vibration are maximum values and must not be applied continuously.

7.11.4 Dimension drawing

All dimensions in mm

SIMATIC RF645T

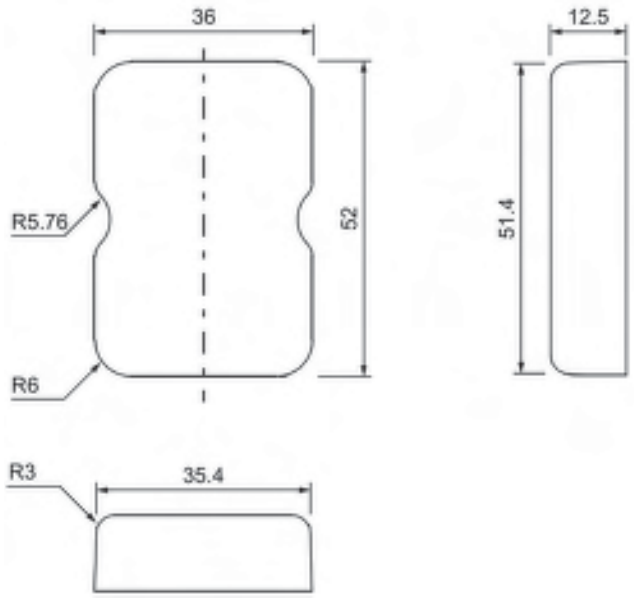

Figure 7-31 Dimension drawing of SIMATIC RF645T

Retaining bracket for SIMATIC RF645T

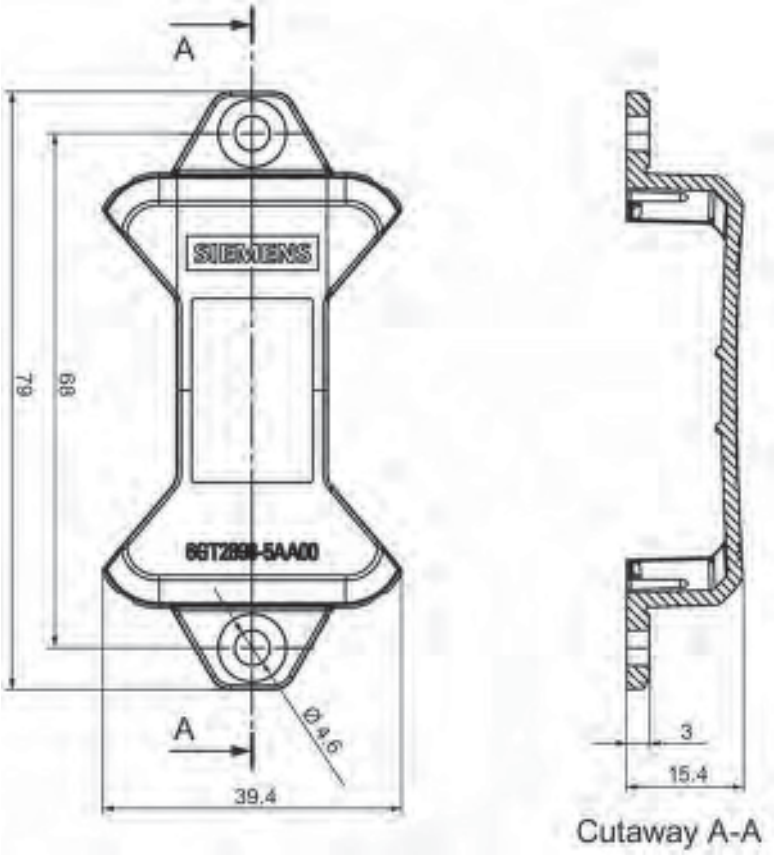

Figure 7-32 Dimension drawing mounting cover (6GT2898-5AA00) for SIMATIC RF645T

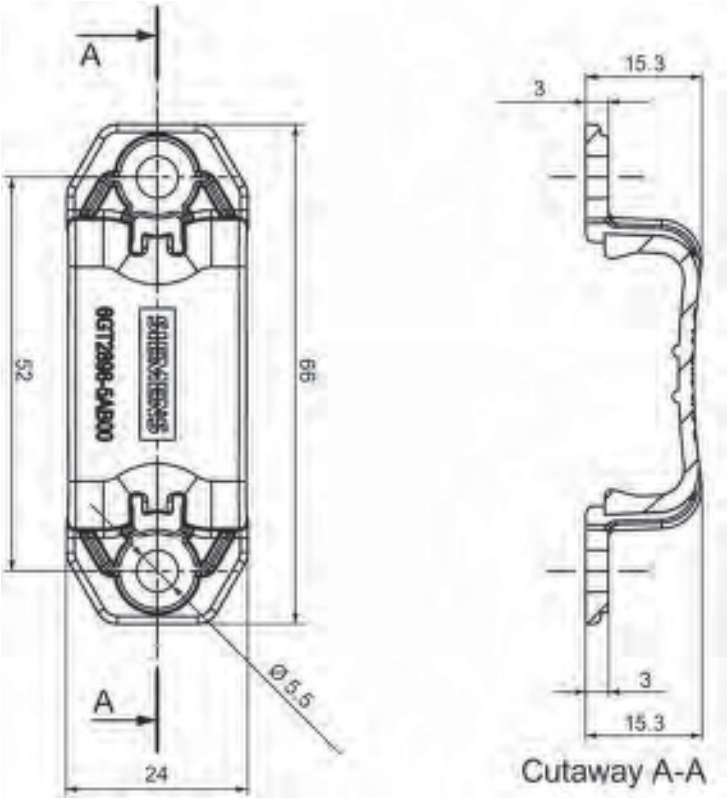

Figure 7-33 Dimension drawing (6GT2898-5AB00) for SIMATIC RF645T

7.11.5 Certificates and approvals

Table 7- 45 Certificates and approvals

Labeling	Description
CE	Conformity with the RED directive 2014/53/EU Conformity with the RoHS directive 2011/65/EU
FC Federal Communications Commission	Passive labels and transponders comply with the valid regulations; certification is not required.

7.12 SIMATIC RF680T

7.12.1 Characteristics

The heat-resistant SIMATIC RF680T transponder is a passive, maintenance-free data carrier. It operates based on UHF Class 1 Gen 2 technology and is used to save the "Electronic Product Code" (EPC) of 96 bits/240 bits. The transponder also has a 512-bit user memory.

These transponders are ideally suited to high-temperature applications (e.g. painting) as well as applications in production logistics. Depending on the temperatures at which it is used, the lifetime of the transponder is limited.

The RF680T is rugged and suitable for industrial applications with IP68/IPX9K degree of protection. It is highly resistant to oil, grease and cleaning agents.

The SIMATIC RF680T is mounted directly onto metal carriers to ensure optimum functioning.

SIMATIC RF680T	Characteristics	
	Area of application	Applications with high temperatures (up to +220 °C). Suitable for use in hazardous areas. Typical areas of application: • Paint shops and their preparatory treatments, incl. drying ovens • Electrophoretic deposition area • Primer coat incl. drying oven • Top coat area incl. drying oven • Washing areas at temperatures > 85 °C
	Frequency range	• ETSI: 865 to 868 MHz • FCC: 902 to 928 MHz
	Air interface	According to ISO 18000-63
	Polarization	Linear
	Temperature range	up to 220 °C
	Memory	• EPC: 96 ... 240 bits • User memory: 64 bytes
	Read range	Max. 5 m [1]
	Mounting	2 x M6 screws
	Mounting	Designed for direct mounting on conductive materials (preferably metal).

[1] Depending on the environment, the reader/the antennas and the set power

7.12.2 Ordering data

Table 7- 46 Ordering data RF680T

Product	Article number
SIMATIC RF680T	6GT2810-2HG80

Delivery format

SIMATIC RF680T is supplied in the following form:

- 10 transponders per packaging unit

  Minimum order quantity: 1 packaging unit (10 units)

7.12.3 Planning the use

7.12.3.1 Optimum antenna/transponder positioning with plane mounting of the transponder on metal

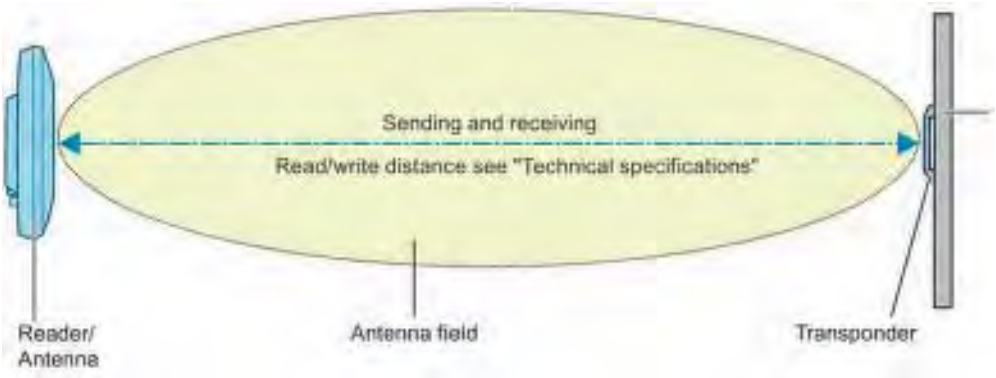

Figure 7-34 Example of optimum antenna/transponder positioning

7.12.3.2 Range when mounted on flat metallic carrier plates

The transponder generally has linear polarization. The polarization axis runs as shown in the diagram below. If the transponder is centrally mounted on a plane metal plate, which may either be almost square or circular, it can be aligned in any direction if the transmitting and receiving antennas operate with circular polarization (such as the RF660A).

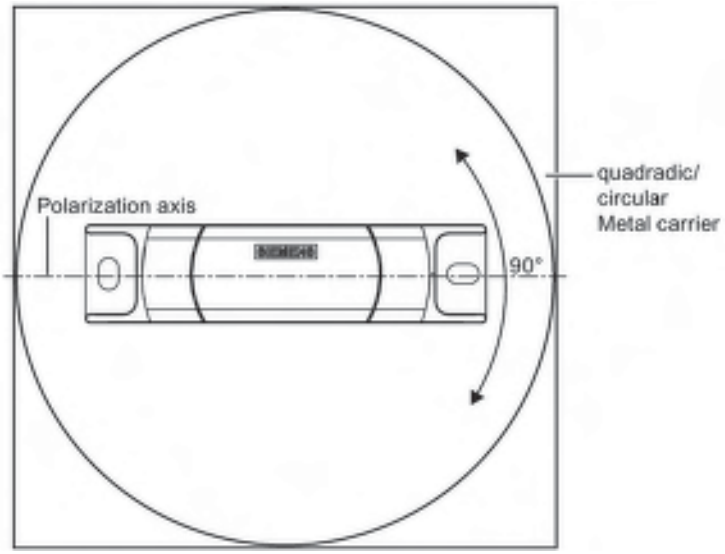

Figure 7-35 Optimum positioning of the transponder on a (square or circular) metal surface

To achieve the listed maximum ranges, the transponder must be mounted on a metallic mounting surface with a minimum diameter of 150 mm.

On rectangular carrier plates, the range depends on the mounting orientation of the transponder.

You will find more information on the range in the section "Minimum distances and maximum ranges (Page 55)".

7.12.3.3 Range when mounted on non-metallic carrier materials

Table 7- 47 Range with non-metallic carriers

Carrier material	Range
Transponder on wooden carrier (dry, degree of moisture < 15%)	typically 50 %
Transponder on plastic carrier	typically 50 %
Transponder on glass	typically 50 %

The maximum range of 100% is achieved by mounting the transponder in a free space with low reflections on a flat metal carrier with a diameter of at least 300 mm.

You will find more information on the range in the section "Minimum distances and maximum ranges (Page 55)".

7.12.3.4 Use of the transponder in the hazardous area

TÜV NORD CERT GmbH, appointed center no. 0044 as per Article 9 of the Directive 94/9/EC of the European Council of 23 March 1994, has confirmed the compliance with the essential health and safety requirements relating to the design and construction of equipment and protective systems intended for use in hazardous areas as per Annex II of the Directive.

The essential health and safety requirements are satisfied in accordance with standards IEC 60079-0:2011 and EN 60079-11:2012.

This allows the RF680T transponder to be used in hazardous areas for gases, for the device category 2G and gas group IIB, or alternatively in hazardous areas for dusts, for the device category 2D and group IIIB.

Note

Readability of the serial number on the type plate

When using the transponder, make sure that the serial number can be read. The serial number is lasered and can be hidden by paint or other materials making it illegible.

The customer is responsible for making sure that the serial number of a transponder for the hazardous area can be read at all times.

Identification

The identification is as follows:

II 2G Ex ib IIB T6 to T2 Gb or

II 2D Ex ib IIIB T135 °C Db

7.12.3.5 Use of the transponder in the hazardous area for gases

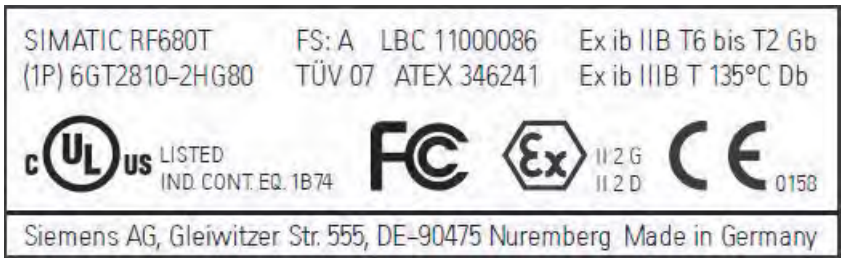

Note

Transponder labeling

The labeling of the front of the transponder shown above is an example and can vary between batches produced at different times.

This does not affect the hazardous area marking.

Temperature class delineation for gases

The temperature class of the transponder for hazardous atmospheres (gases) depends on the ambient temperature and the radiated power of an antenna in the 865 - 868 MHz frequency band within the hazardous area.

WARNING

Ignitions of gas-air mixtures

When using the RF680T transponder, check to make sure that the temperature class is adhered to in keeping with the requirements of the area of application Non-compliance with the permitted temperature ranges while using the transponder can lead to ignitions of gas-air mixtures.

WARNING

Ignitions of gas-air mixtures

The maximum transmitting power of the transmitter used to operate the transponder must not exceed 2 W. Non-compliance with the permissible transmitting power can lead to ignitions of gas-air mixtures.

Temperature class assignment for gases and a radiated power less than 100 mW ERP

If the radiated power of an antenna radiating into the hazardous area or located in the hazardous area and operating in the 865 - 868 MHz frequency band cannot exceed the value 100 mW, the temperature class assignment is as follows:

Ambient temperature range	Temperature class
-25 °C ... +200 °C	T2
-25 °C ... +190 °C	T3
-25 °C ... +125 °C	T4
-25 °C ... +90 °C	T5
-25 °C ... +75 °C	T6

Temperature class assignment for gases and a radiated power less than 500 mW ERP

If the radiated power of an antenna radiating into the hazardous area or located in the hazardous area and operating in the 865 - 868 MHz frequency band cannot exceed the value 500 mW, the temperature class assignment is as follows:

Ambient temperature range	Temperature class
-25 °C ... +220 °C	T2
-25 °C ... +173 °C	T3
-25 °C ... +108 °C	T4
-25 °C ... +73 °C	T5
-25 °C ... +58 °C	T6

Temperature class assignment for gases and radiated power for 1000 mW ERP

If the radiated power of an antenna radiating into the hazardous area or located in the hazardous area and operating in the 865 - 868 MHz frequency band cannot exceed the value 1000 mW, the temperature class assignment is as follows:

Ambient temperature range	Temperature class
-25 °C ... +220 °C	T2
-25 °C ... +151 °C	T3
-25 °C ... +86 °C	T4
-25 °C ... +51 °C	T5
-25 °C ... +36 °C	T6

Temperature class assignment for gases and radiated power for 2000 mW ERP

If the radiated power of an antenna radiating into the hazardous area or located in the hazardous area and operating in the 865 - 868 MHz frequency band cannot exceed the value 2000 mW, the temperature class assignment is as follows:

Ambient temperature range	Temperature class
-25 °C ... +208 °C	T2
-25 °C ... +108 °C	T3
-25 °C ... +43 °C	T4
-25 °C ... +8 °C	T5

Temperature class assignment for gases and a radiated power of 10 mW to 2000 mW ERP

If the radiated power of an antenna radiating into the hazardous area or of an antenna located in the hazardous area in the 865 - 868 MHz frequency band cannot exceed the radiated power selected in the following diagram, the maximum permitted ambient temperature range can be found in the corresponding temperature function of the diagram. This makes the following temperature class assignment valid:

Ambient temperature range	Temperature class
-25 °C ... T_{max} (T2) °C	T2
-25 °C ... T_{max} (T3) °C	T3
-25 °C ... T_{max} (T4) °C	T4
-25 °C ... T_{max} (T5) °C	T5
-25 °C ... T_{max} (T6) °C	T6

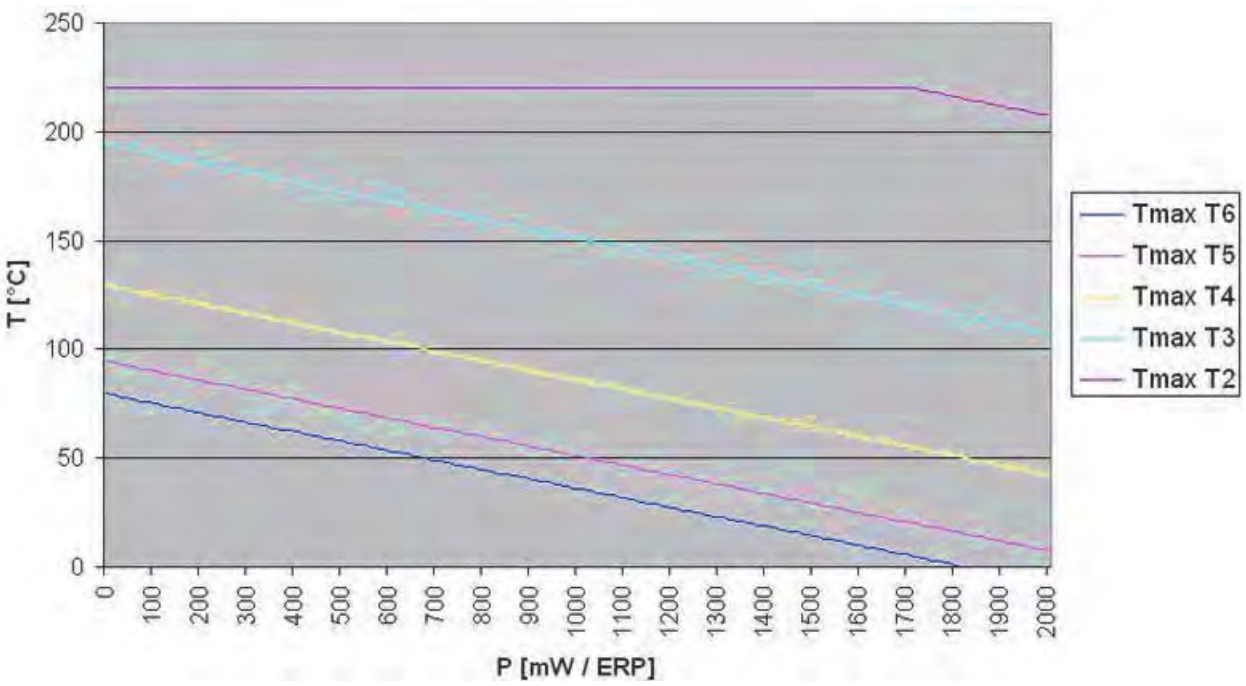

Figure 7-36 Maximum permitted ambient temperature depending on the radiated power

7.12.3.6 Use of the transponder in the hazardous area for dusts

The equipment is suitable for dusts whose ignition temperatures for a dust layer of 5 mm are higher than 210 °C (smoldering temperature). The ignition temperature specified here according to IEC 60079-0:2011 for ignition protection type ib in this case references the smoldering temperature of a layer of combustible flyings (ib IIIA) or alternatively non-conductive dusts (ib IIIB).

Temperature class delineation for dusts

WARNING
Ignitions of dust-air mixtures When using the RF680T transponder, check to make sure that the temperature values are adhered to in keeping with the requirements of the area of application Non-compliance with the permitted temperature ranges while using the transponder can lead to ignitions of dust-air mixtures.

Temperature class assignment for dusts and a radiated power less than 100 mW ERP

If the radiated power of an antenna radiating into the hazardous area or located in the hazardous area and operating in the 865 - 868 MHz frequency band cannot exceed the value 100 mW, the temperature class assignment is as follows:

Ambient temperature range	Temperature value
-25 °C ≤ Ta ≤ +125 °C	T135 °C

Temperature class assignment for dusts and a radiated power less than 500 mW ERP

If the radiated power of an antenna radiating into the hazardous area or located in the hazardous area and operating in the 865 - 868 MHz frequency band cannot exceed the value 500 mW, the temperature class assignment is as follows:

Ambient temperature range	Temperature value
-25 °C ≤ Ta ≤ +108 °C	T135 °C

Temperature class assignment for dusts and a radiated power less than 1000 mW ERP

If the radiated power of an antenna radiating into the hazardous area or located in the hazardous area and operating in the 865 - 868 MHz frequency band cannot exceed the value 1000 mW, the temperature class assignment is as follows:

Ambient temperature range	Temperature value
-25 °C ≤ Ta ≤ +86 °C	T135 °C

Ambient temperature range for dust and radiated power of 2000 mW ERP

If the radiated power of an antenna radiating into the hazardous area or located in the hazardous area and operating in the 865 - 868 MHz frequency band cannot exceed the value 2000 mW, the temperature class assignment is as follows:

Ambient temperature range	Temperature value
-25 °C ≤ Ta ≤ +43 °C	T135 °C

Temperature class assignment for dusts and a radiated power of 10 mW ERP to 2000 mW ERP

If the radiated power of an antenna radiating into the hazardous area or located in the hazardous area and operating in the 865 - 868 MHz frequency band can be between the values 10 mW ERP and 2000 mW ERP, the temperature class assignment is as follows:

Ambient temperature range	Temperature value
-25 °C ≤ Ta ≤ $T_{max.\ ambient}$ °C [1]	135°C [2]

[1] See diagram, orange line

[2] See diagram, blue line

WARNING

Ignitions of dust-air mixtures

Using the RF680T transponder with radiant power greater than 1280 mW ERP, requires compliance with the reduced maximum ambient temperature (see diagram) for maintaining the temperature value to a maximum of 135 °C. Non-compliance with the permitted temperature ranges while using the transponder can lead to ignitions of dust-air mixtures.

The respective temperature value and the maximum allowed ambient temperature in relation to the radiated power of the antenna is shown in the diagram below:

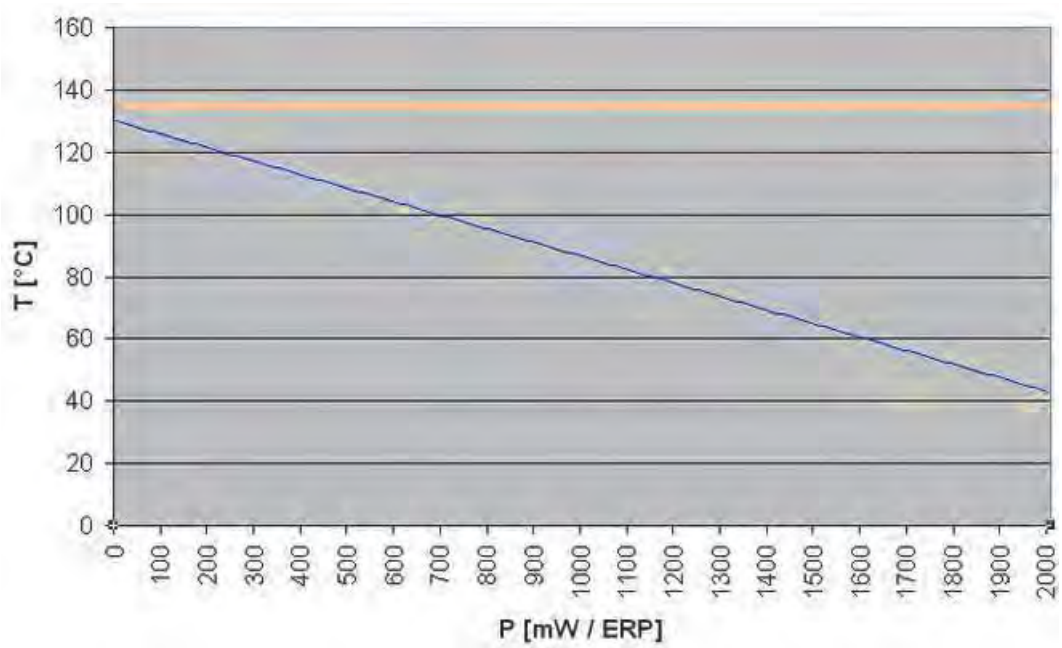

Temperature value

Ambient temperature

Figure 7-37 Temperature value and maximum permitted ambient temperature in relation to the radiated power

7.12.4 Technical specifications

Table 7- 48 Technical specifications of the transponder SIMATIC RF680T

	6GT2810-2HG80
Product type designation	SIMATIC RF680T
Radio frequencies	
Operating frequency	
• ETSI	• 865 to 868 MHz
• FCC	• 902 ... 928 MHz [1)]
Memory	
Chip (manufacturer/type)	NXP / G2XM
Memory type	EEPROM
Memory configuration	
• EPC	• 12 ... 30 bytes / 96 ... 240 bits
• User memory	• 64 bytes / 512 bits
• TID	• 8 bytes / 64 bits
• Reserved (passwords)	• 8 bytes / 64 bits
Number of write cycles (< 40 °C)	> 10^{14}
Number of read cycles (< 40 °C)	> 10^{5}
Data retention time (< 40 °C)	10 years
Electrical data	
Range	≤ 5 m [2)]
Protocol	ISO 18000-63
Transmission speed	≤ 320 kbps
Polarization	Linear
Mechanical specifications	
Material	PPS
Silicone-free	Yes
Color	Black
Printing	No

	6GT2810-2HG80
Permitted ambient conditions	
Ambient temperature	
• In operation, during write/read access	• -25 … +100 °C, permanent Special features: +100 ... +140 °C, 20 % reduction of the limit distance As of +140 °C, no processing possible Up to +200 °C, tested up to 5000 hours or 3000 cycles Up to +220 °C, tested up to 2000 hours or 1500 cycles
• In operation, outside write/read access	• -40 ... +220 °C
• During transportation and storage	• -40 … +100 °C [3]
Distance from metal	0 mm Designed for mounting directly on metal
Degree of protection	IP68 / IPx9K
Resistance to mechanical stress	Torsion and bending stress is not permitted
Shock-resistant according to DIN EN 60721-3-7, Class 7 M3	100 g [4]
Vibration to EN 60068-2-6	20 g [4]
Design, dimensions and weight	
Dimensions (L x W x D)	32 × 15 × 130 mm
Weight	50 g
Type of mounting	2 x M6 screws ≤ 1 Nm
Standards, specifications, approvals	
Proof of suitability	II 2G Ex ib IIB T6 to T2 Gb, II 2D Ex ib IIIB T135 °C Db
MTBF	1940 years

[1] The range is reduced to 70% at the band limits 902 MHz or 928 MHz. Due to frequency fluctuations, this effect has no impact.

[2] Mounting on a flat metal surface with a diameter of at least 300 mm and at room temperature. The information relates to the maximum read range. You will find more information on ranges in the section "Minimum distances and maximum ranges (Page 55)".

[3] To use the transponder in hazardous areas, directive 94/9/EC of the European Council of 23 March 1994 must be complied with. Note the information in the section "Use of the transponder in the hazardous area (Page 444)".

[4] The values for shock and vibration are maximum values and must not be applied continuously.

7.12.5 Dimension drawing

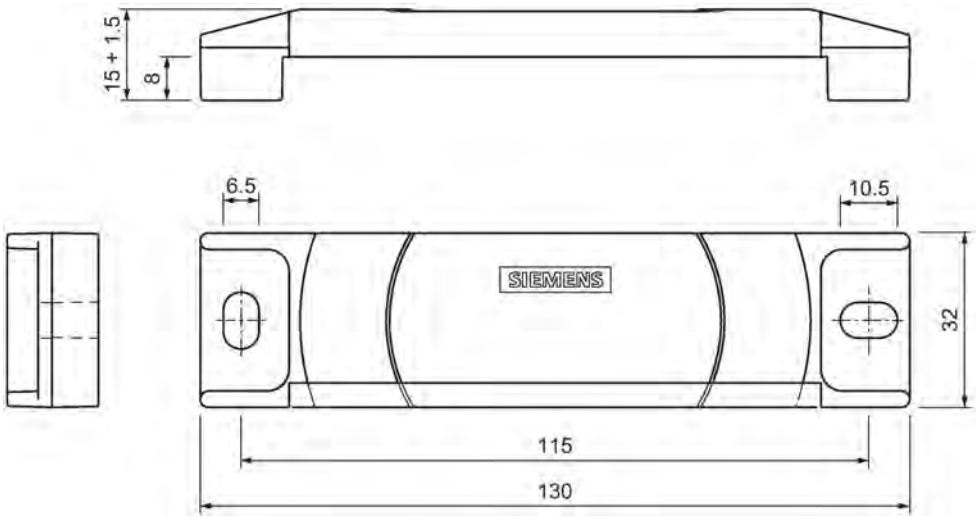

Figure 7-38 Dimension drawing of SIMATIC RF680T

All dimensions in mm

Tolerances unless indicated otherwise ±0.5 mm.

7.12.6 Certificates and approvals

Table 7- 49 6GT2810-2HG80 - RF680T

Certificate	Description
CE	Conformity with the RED directive 2014/53/EU Conformity with the RoHS directive 2011/65/EU Conformity with the ATEX directive 2014/34/EU

Table 7- 50 6GT2810-2HG80 - RF680T

Standard	
FC Federal Communications Commission	Passive labels or transponders comply with the valid regulations; certification is not required.
UL C US	This product is UL-certified for the USA and Canada. It meets the following safety standard(s): • UL508 - Industrial Control Equipment • CSA C22.2 No. 142 - Process Control Equipment • UL Report E 120869

ATEX certification

The type test certification for the RF680T Version 1 is stored by TÜV 07 ATEX 346241. On the basis of this certification, the CE declaration by the manufacturer has been made according to directive 94/9/EC.
The producing factory of the RF680T Version 1 has an ATEX quality assurance system recognized by the DEKRA EXAM GmbH with certificate number BVS 11 ATEX ZQS/E111.

Manufacturer's address - distributor

Siemens Aktiengesellschaft (PD PA CI)
Process Industries and Drives Division
Process Automation
Industrial Communication and Identification
D-76181 Karlsruhe, Germany

Manufacturer's address - factory

Siemens Aktiengesellschaft (DF FA CE)
Digital Factory
Factory Automation
Control Components and System Engineering
Breslauer Straße 5
D-90766 Fürth, Germany

7.13 SIMATIC RF682T

7.13.1 Characteristics

The heat-proof SIMATIC RF682T is a passive and maintenance-free data carrier. The RF682T operates based on the UHF Class 1 Gen 2 technology and is used to store the "Electronic Product Code" (EPC) of 224 bits. The transponder also has a 3072-bit user memory.

These transponders with a limited service life are ideally suited to high-temperature applications (e.g. the painting of vehicle bodies) as well as applications in production logistics.

The RF682T is rugged and suitable for industrial applications with degree of protection IP68/IPX9K. It is highly resistant to oil, grease and cleaning agents.

The SIMATIC RF682T is mounted directly onto metal surfaces to ensure optimum functioning.

SIMATIC RF682T	Characteristics	
	Area of application	Applications with high temperatures (briefly up to +220 °C). Typical areas of application: • Paint shops and their preparatory treatments, incl. drying ovens • Electrophoretic deposition area • Primer coat incl. drying oven • Top coat area incl. drying oven • Washing areas at temperatures > 85 °C
	Air interface	According to ISO 18000-63
	Memory	• EPC: 28 bytes / 224 bits • User memory: 384 bytes / 3072 bits
	Read range	Max. 3.5 m [1]
	Mounting	Only intended for mounting directly on metal.

[1] Depending on the environment, the reader/the antennas and the set power

7.13.2 Ordering data

Table 7- 51 Ordering data

	Article number
SIMATIC RF682T	6GT2810-3HG80
Mounting set for SIMATIC RF68xT (2x bracket)	6GT2890-2AA00

Delivery format

The SIMATIC RF682T is available in the following form:

- 10 transponders per packaging unit

  Minimum order quantity: 1 packaging unit

The mounting set for SIMATIC RF682T is available in the following form:

- 10 mounting sets per packaging unit

  Minimum order quantity: 1 packaging unit

7.13.3 Planning operation

7.13.3.1 Optimum antenna/transponder positioning with plane mounting of the transponder on metal

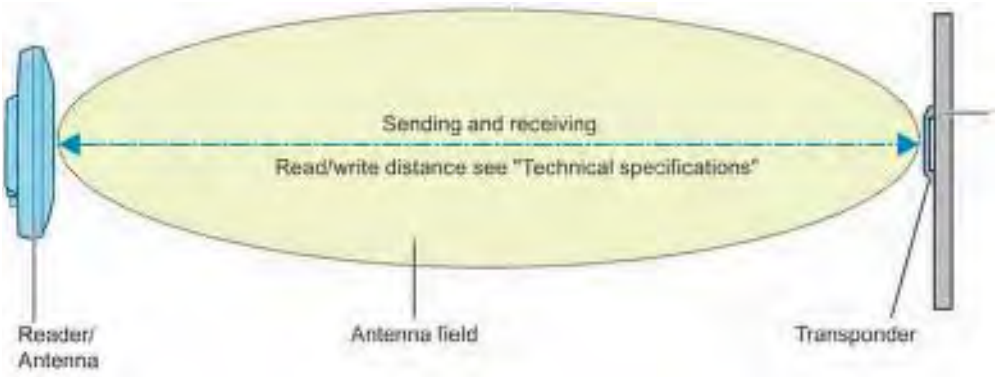

Figure 7-39 Example of optimum antenna/transponder positioning

7.13.3.2 Note on installation

NOTICE
Reduction of the write/read range When mounting on metal or conductive material, ensure that the space below the transponder remains empty.

NOTICE
Mounting at a high temperature To relieve mechanical strain or tension on the transponder, when using the transponder at temperatures > +80 °C the transponder should be mechanically separated from the supporting surface by using the mounting brackets (due to the differing expansion coefficients of all materials).

7.13.3.3 Range when mounted on flat metallic carrier plates

The transponder generally has linear polarization. The polarization axis runs as shown in the diagram below. The polarization axis of the transponder should always run parallel to the polarization axis of the antenna to achieve optimum distances and results.

If the transponder is centrally mounted on a plane metal plate, which may either be almost square or circular, it can be aligned in any direction if the transmitting and receiving antennas operate with circular polarization (such as the RF650A).

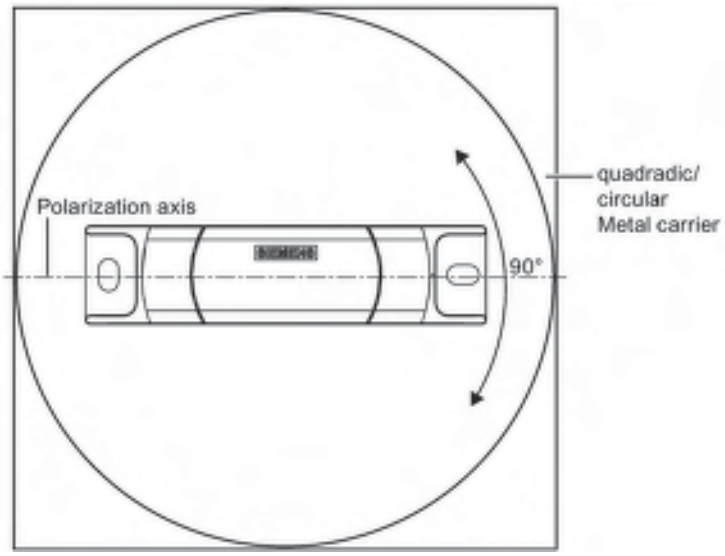

Figure 7-40 Optimum positioning of the transponder on a (square or circular) metal plate

The metal plate must have a minimum diameter of 150 x 150 mm. Smaller surfaces can cause a reduction of the read/write distances.

On rectangular carrier plates, the range depends on the mounting orientation of the transponder.

7.13.4 Technical specifications

Table 7- 52 Technical specifications of SIMATIC RF682T

	6GT2810-3HG80
Product designation	SIMATIC RF682T
Radio frequency	
Operating frequency	
• ETSI	• 865 to 868 MHz
• FCC	• 902 to 928 MHz
Memory	
Chip (manufacturer/type)	NXP UCode DNA
Memory type	EEPROM
Memory configuration	
• EPC	• 28 bytes / 224 bits
• User memory	• 384 bytes / 3072 bits
• TID	• 12 bytes / 96 bits
Number of write cycles (< 40 °C)	> 10^5
Number of read cycles (< 40 °C)	unlimited
Data retention time (< 40 °C)	20 years
Electrical data	
Range	
• Writing	• Up to 1.8 m [1)]
• Reading	• Up to 3.5 m [1)]
Protocol	EPCglobal Class 1 Gen 2 / ISO 18000-63
Transmission speed	≤ 400 kbps
Polarization	Linear
Mechanical specifications	
Material	Plastic (PPS)
Silicone-free	Yes
Color	Black
Imprint	No

	6GT2810-3HG80
Permitted ambient conditions	
Ambient temperature	
• In operation, during write/read access	• -25 to +100 °C permanently Special features: As of +140 °C, no processing possible
• In operation, outside write/read access	• -40 to +220 °C Special features: Up to 220 °C Tested up to 250 hours or 500 cycles
• During transportation and storage	• -40 ... +100 °C
Distance from metal	Only intended for mounting directly on metal
Degree of protection	IP68 / IPx9K
Shock according to DIN EN 60721-3-7 Class 7 M3	100 g [2]
Vibrations according to EN 60068-2-6	20 g [2]
Resistance to mechanical stress	Torsion and bending stress are not permitted
Design, dimensions and weight	
Dimensions (L x W x H)	130 × 32 × 15 mm
Weight	50 g
Type of mounting	Screw connection 2x M6 (≤ 1 Nm)
Standards, specifications, approvals	
MTBF	1940 years

[1] Depending on the environment, the reader / the antennas and the set power

[2] The values for shock and vibration are maximum values and must not be applied continuously.

7.13.5 Dimension drawing

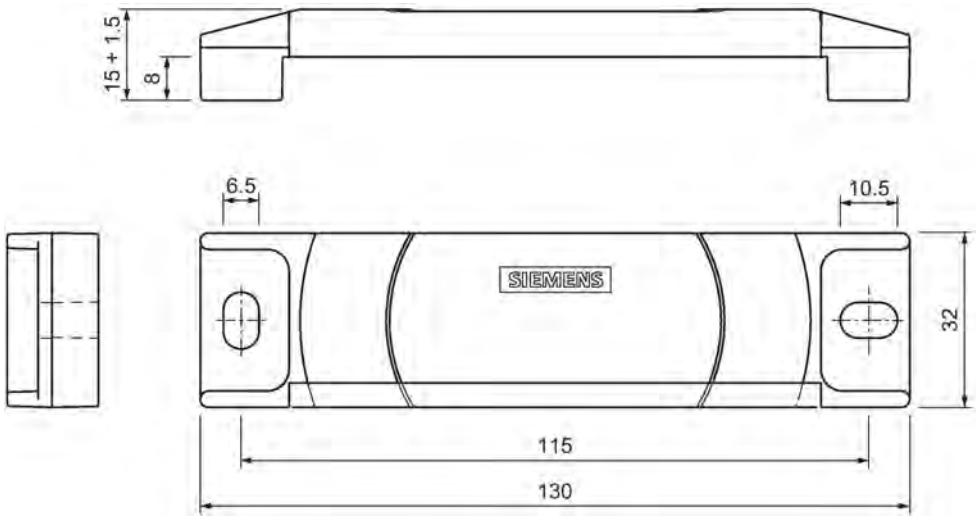

Figure 7-41 Dimension drawing of SIMATIC RF682T

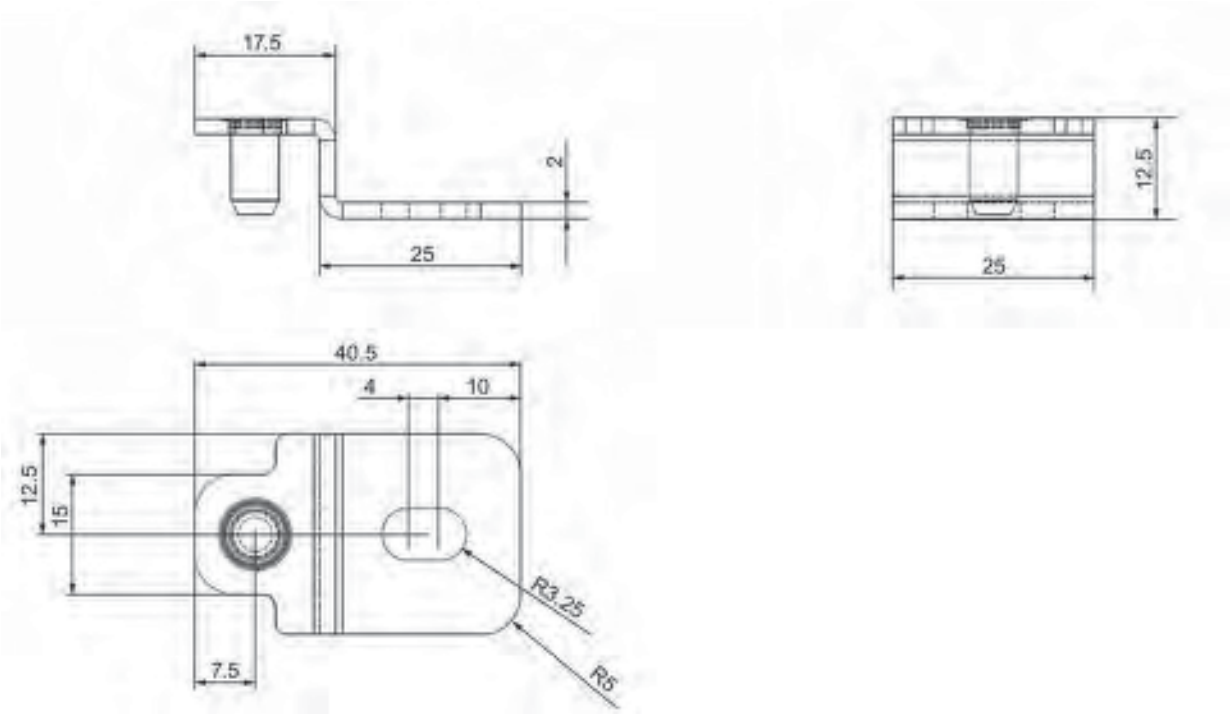

Figure 7-42 Dimension drawing mounting for SIMATIC RF68xT

All dimensions in mm

Tolerances unless indicated otherwise ±0.5 mm.

7.13.6 Certificates and approvals

Table 7- 53 Certificates and approvals

Labeling	Description
CE	Conformity with the RED directive 2014/53/EU Conformity with the RoHS directive 2011/65/EU
FC Federal Communications Commission	Passive labels and transponders comply with the valid regulations; certification is not required.

Integration into networks

8

8.1 Overview of parameterization of RF600 reader

The parameter assignment possibilities that are available to you for each reader of the RF600 family are outlined below. You will find detailed information on parameter assignment in the specified chapters of the documentation:

Table 8- 1 Reader parameter assignment options

	SIMATIC RF650R	SIMATIC RF610R/RF615R/RF680R/RF685R
SIMATIC STEP 7	--	Configuration manual "SIMATIC RF600", section "Interface to the SIMATIC controller"
XML commands	Configuration manual "SIMATIC RF600", section "XML interface"	Configuration manual "SIMATIC RF600", section "XML interface"
Ethernet/IP	--	Configuration manual "SIMATIC RF600", section "Interface to the Rockwell controller"
OPC UA	Configuration manual "SIMATIC RF600", section "OPC UA interface"	Configuration manual "SIMATIC RF600", section "OPC UA interface"

You can find the "SIMATIC RF600" configuration manual on the pages of "Siemens Industry Online Support (https://support.industry.siemens.com/cs/ww/en/ps/15088/man)".

8.2 Integration in IT networks via the user application

Connecting the RF600 readers using XML

If you want to create your own applications for the RF600 readers, you can do this using the XML-based demo application of the reader. You can find information on XML commands in the configuration manual "SIMATIC RF600".

Connecting the RF600 readers using OPC UA

If you want to create your own applications for the RF600 readers, you can do this using the OPC UA application of the reader. You can find information on OPC UA in the configuration manual "SIMATIC RF600".

You will find more information on OPC UA on the pages of the "OPC Foundation (https://opcfoundation.org/)".

Connecting the RF600 readers using OEM

The RF600 readers also provide you with the option of developing and running your application directly on the Linux operating system integrated in the reader. For this function, you need special activation of the reader in the form of firmware. It is only available upon request. Contact your local Siemens office about this.

8.3 Integration in control networks

Connecting the RF610R/RF615RRF680R/RF685R readers

RF610R/RF615R/RF680R/RF685R readers can be connected to a SIMATIC controller via Ethernet, EtherNet/IP, PROFINET directly or via PROFIBUS and the ASM 456 communications module.

RF610R/RF615R readers can be connected to a SIMATIC controller via Ethernet and PROFINET directly.

Interfaces and blocks of the communications modules/readers

Table 8- 2 Interfaces and blocks of the communications modules/readers

ASM/CM	Interfaces to the application (PLC)	Blocks	Reader connections
ASM 456	PROFIBUS DP-V1	Ident profile	1
RF610R/ RF615R/ RF680R/ RF685R	PROFINET IO	Ident profile	--
	EtherNet/IP	--	--
	OPC UA	--	--

Example configurations

The following configuration graphics show as an example how the RF600 readers can be connected to SIMATIC controllers.

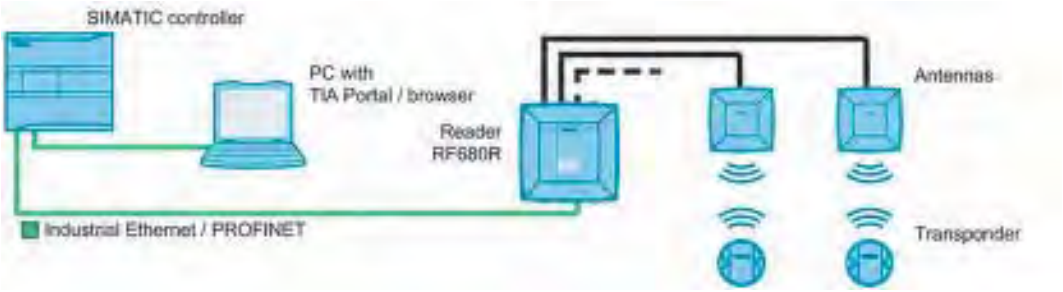

Figure 8-1 Configuration graphic with SIMATIC RF680R (or RF685R, RF610R, RF615R) and PROFINET connection

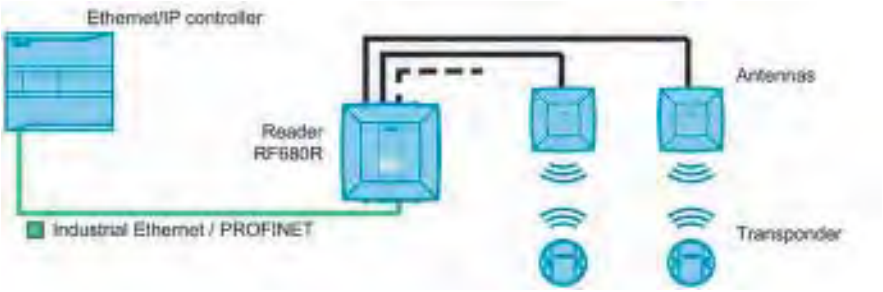

Figure 8-2 Configuration graphic with SIMATIC RF680R (or RF685R) and PROFINET connection via an EtherNet/IP controller

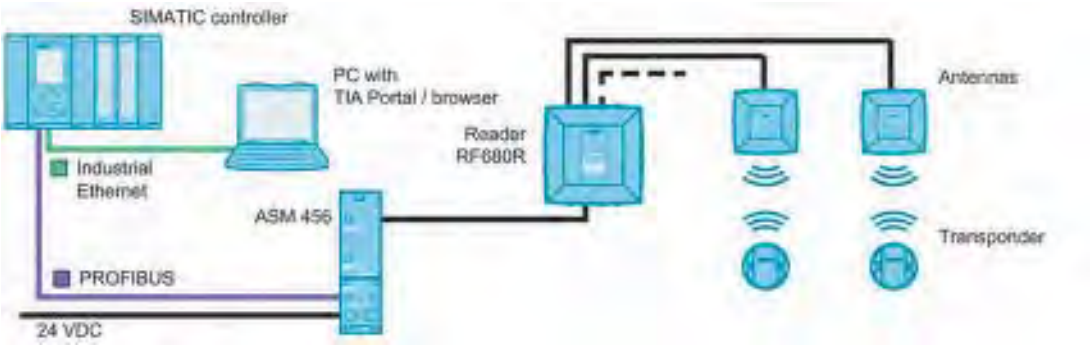

Figure 8-3 Configuration graphic with SIMATIC RF680R (or RF685R, RF610R, RF615R) and PROFIBUS connection

You will find more information on the ASM 456 in the operating instructions "ASM 456 (https://support.industry.siemens.com/cs/ww/en/view/32629442)".

System diagnostics 9

9.1 Diagnostics via the LED displays of the reader

Please note that only the RF680R/RF685R readers have LED status display. RF610R/RF615R/RF650R readers have a "PRESENCE" display instead. With the help of the LED displays, you can read out the status and the error messages of the RF680R/RF685R readers.

The LED status display is in the middle on the front of the reader. The LED operating display is at the bottom on the front of the reader.

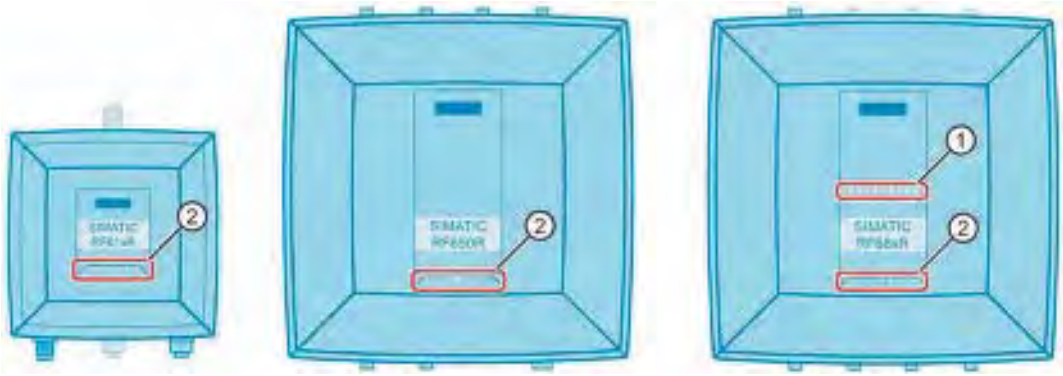

① LED status display (ST1 - ST9) - RF680R/RF685R only

② LED operating display

- RUN/STOP (R/S) — Shows whether the reader is ready for operation.
- ERROR (ER) — Indicates whether an error has occurred.
- MAINTENANCE (MAINT) - only with RF610R/RF615R/RF680R/RF685R — Shows whether the reader needs maintenance.
- POWER (PWR) — Shows whether the reader is supplied with power.
- PRESENCE (PRE) - only with RF610R/RF615R/RF650R — Among other things, indicates whether or not there are multiple transponders in the antenna field. With the RF680R/RF685R readers, this is indicated by the status display.
- LINK 1 (LK1) — Indicates that there is a connection via Ethernet interface "1".
- RECEIVE/TRANSMIT 1 (R/T1) — Indicates that data is being sent and/or received via Ethernet interface "1".
- LINK 2 (LK2) - only with RF680R/RF685R — Indicates that there is a connection via Ethernet interface "2".
- RECEIVE/TRANSMIT 2 (R/T2) - only with RF680R/RF685R — Indicates that data is being sent and/or received via Ethernet interface "2".

Figure 9-1 LED displays of the RF61xR, RF650R and RF68xR reader

Functions of the "PRE" LED (RF610R/RF615R/RF650R)

- Display of RF activity

  Indicates whether the reader is sending via the antenna (constant green), whether transponders were detected by the reader (flashing yellow) and whether a transponder was sent to the user application (constant yellow).

- Indication of the quality of the antenna alignment (RSSI)

  When aligning the antenna using the WBM, the "PRE" LED indicates the RSSI value with which the transponder was detected:

  – Red: Low RSSI value
  – Yellow: Medium RSSI value
  – Green: High RSSI value

- Error displays

  With the RF610R/RF615R readers, errors are displayed by means of a red flashing "PRE" LED.

Functions of the LED status display (RF680R/RF685R)

With the LED operating display, you can read out the various operating statuses of the readers. The LED status display of the RF680R and RF685R readers has several functions. Among other things, the status display provides the following functions:

- Startup of the reader

  The startup process of the reader is displayed by a status bar lit yellow. As soon as the startup is completed, the reader requires several seconds before it is operational. This phase is indicated by a status bar flashing yellow. During a firmware update, the startup takes longer.

  The reader is ready for operation when the "R/S" LED is lit/flashes green. If the "R/S" LED is flashing, the reader is waiting for a connection. If the "R/S" LED is lit constantly, the reader is connected to the controller or PC.

- Error display

  If there is an error, the actual error is indicated by the lighting/flashing pattern. The "ER" LED of the LED operating display also flashes. You will find more information on error messages in the section "XML/PLC error messages (Page 473)".

- Display of RF activity

  Indicates whether the reader is sending via the antenna (constant green), whether transponders were detected by the reader (flashing yellow) and whether a transponder was sent to the user application (constant yellow).

- Indication of the quality of the antenna alignment (RSSI)

  When aligning the antenna, using the WBM, the status display indicates the RSSI value with which the transponder was detected. The more LEDs light up (first 3x red, then 3x yellow, then 3x green), the higher the RSSI value with which the transponder was detected.

  You can find more information on the antenna alignment in the configuration manual "SIMATIC RF600".

9.1.1 How the LED status display works

Note that the RF610R/RF615R/RF650R readers do not have an LED status display. The LED status display displays the error messages of the RF680R/RF685R readers.

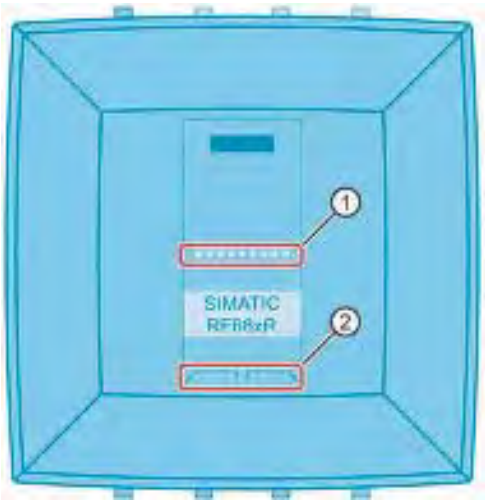

① LED status display (ST1 - ST9)

② LED operating display

Figure 9-2 LED displays of the RF680R/RF685R readers

Error messages are indicated by red flashing status LEDs and the red flashing "ER" LED. A distinction is made between hardware errors (faults) and normal errors. With hardware errors, the LEDs flash with a fast frequency of 4 Hz. With all other errors, the LEDs flash with a slow frequency of 2 Hz.

The detailed LED error display described here is enabled as default. If required, you can disable this in the "Settings - General" menu item of the WBM. If the LED error display is enabled, a separate LED pattern is assigned to every error in the LED status display. The displayed LED patterns are based on the error code of the hexadecimal error message converted to binary.

Example

The error "0x12" (XML error message) is displayed. Converted to binary, this results in the value "0001 0010". This converted value is displayed in the LED status display. The value "0" means that the corresponding LED does not light up, whereas the value "1" means that the corresponding LED is lit red. The middle (5th LED) of the LED status display serves as a "delimiter" and is always lit yellow.

XML error message hexadecimal	Error message binary	LED fault display
0x12	0001 0010	

9.1.2 Diagnostics via LED operating display

The operating states of the reader are displayed by the "RUN/STOP", "ERROR", "MAINTENANCE" and "PRESENCE" LEDs. The LEDs can adopt the colors green, red or yellow and the statuses off □, on ■, flashing ◪:

Table 9- 1 Display of operating statuses

R/S	ER	MAINT[1]	PRE[2]	Meaning
□	□	□	□	The device is turned off.
■	■	■	■	The device is starting up.
◪	◪	--	--	The device is ready for operation. The connection to the application (XML, OPC UA, controller) is not established. There may be an error.
■	◪	--	--	The device is ready for operation but there is an error.
◪	□	--	--	The device is ready for operation. The connection to the application (XML, OPC UA, controller) is established.
■	□	--	--	The device is working. • STEP 7, Ethernet/IP: The "writeconfig" command was received. • XML application: The "hostGreeting" command was received. • OPC UA: Connection to the client is established.
◪	◪	◪	◪	Flash test for reader identification.
--	◪	--	--	There is an error. You will find more information on error messages in the section "XML/PLC error messages (Page 473)".
--	■	--	--	The network load too high. The functioning of the device is being disturbed due to receiving too many network packets.
--	--	--	■	The antenna is switched on. There is no transponder in the antenna field.
--	--	--	◪	There is at least one transponder in the antenna field.
--	--	--	■	One or more transponders have been detected as valid.

[1] Not present on the RF650R.

[2] Not present on the RF680R/RF685R.

--: Not relevant

9.2 XML/PLC error messages

Note that if there are error messages, the ERR LED ("ER") of the reader flashes. You can read the error using the XML or PLC error codes. As an alternative, you can also recognize the error using the LED status display of the RF680R and RF685R readers as described in the section "How the LED status display works (Page 471)".

The following table explains the XML/PLC error codes. Only the errors relevant to the RF600 readers are included in the PLC error codes (STEP 7). You can find all other error codes in the corresponding Ident profile manual.

Table 9- 2 Error messages of the RF600 readers

"ER" LED	XML/ LED (hex)	PLC block (hex)	Error description
2 Hz	0x11	0xE1FE01	Cannot write to the memory of the transponder. • Transponder memory is defective. • Transponder EEPROM was written too frequently and has reached the end of its service life.
2 Hz	0x12	0xE1FE02	Presence error The transponder is no longer within the transmission window of the reader. The command was not or only partially executed. Read command: There is no valid data in "IDENT_DATA". Write command: The transponder that has just left the antenna field contains an incomplete data record. Possible causes: • Operating distance between reader and transponder is not being maintained. • Configuration error: The data record to be processed is too large (in dynamic mode).
2 Hz	0x13	0xE1FE03	Address error The address area of the transponder has been exceeded. Possible causes: • Start address of the command start has been incorrectly set. • Wrong transponder type • The area to be written to is write-protected.
2 Hz	0x1A	0xE1FE0A	The transponder is read/write-protected.
2 Hz	0x91	0xE1FE81	The transponder is not responding.
2 Hz	0x92	0xE1FE82	The transponder password is incorrect. Access is denied.
2 Hz	0x93	0xE1FE83	The verification of the written transponder data has failed.
2 Hz	0x94	0xE1FE84	General transponder error
2 Hz	0x95	0xE1FE85	The transponder has too little power to execute the command.
2 Hz	0x22	0xE2FE02	More transponders are located in the transmission window than can be processed at the same time by the reader.
2 Hz	0xA1	0xE2FE81	There is no transponder with the required EPC ID in the transmission window or there is no transponder at all in the antenna field.
2 Hz	0xA2	0xE2FE82	The requested data is not available.
2 Hz	0xA3	0xE2FE83	CRC error in reader-transponder communication.

"ER" LED	XML/ LED (hex)	PLC block (hex)	Error description
2 Hz	0xA4	0xE2FE84	The selected antenna is not enabled.
2 Hz	0xA5	0xE2FE85	The selected frequency is not enabled.
2 Hz	0xA6	0xE2FE86	The carrier signal is not activated.
2 Hz	0xA7	0xE2FE87	There is more than one transponder in the transmission window.
2 Hz	0xA8	0xE2FE88	General radio protocol error
4 Hz	0x41	0xE4FE01	Warning in the event of low power supply The power supply is very close to the low limit.
4 Hz	0x43	0xE4FE03	Antenna error • The antenna or the antenna cable is defective. • Error in the connection to the reader; the reader is not answering (in PROFIBUS operation). – The cable between the communications module and reader is wired incorrectly or there is a cable break – The 24 V supply voltage is not connected or is turned off or has failed briefly – Automatic fuse on the communications module has blown – Hardware defective – Another reader is in the vicinity and is active – There is a reflecting metal surface in the vicinity that is disrupting the antenna field Possible corrective measures: - Reduce radiated power of antenna. - Change antenna alignment. Avoid parallel alignment of antenna/metal. - Use antenna cable with greater attenuation. - Install attenuator between antenna and reader. – Execute "init_run" after correcting the error
2 Hz	0x44	0xE4FE04	The buffer on the communications module or reader is not adequate to store the command temporarily.
2 Hz	0x45	0xE4FE05	The buffer on the communications module or reader is not adequate to store the data temporarily.
2 Hz	0x46	0xE4FE06	The command is not permitted in this status or is not supported. Possible cause: • "INIT" was chained. • Command repetition was started without "Presence mode".
2 Hz	0x47	0xE4FE07	Startup message from reader/communications module The reader or communications module was off and has not yet received a "Reset_Reader" ("WRITE-CONFIG") command. • Execute "INIT" • The same physical address in the "IID_HW_CONNECT" parameter is being used more than once. Check your "IID_HW_CONNECT" parameter settings. • Check connection to the reader • The baud rate was switched over but power has not yet been cycled

"ER" LED	XML/ LED (hex)	PLC block (hex)	Error description
2 Hz	0xC1	0xE4FE81	The specified tag field of the transponder is unknown.
2 Hz	0xCA	0xE4FE8A	General error
2 Hz	0xCB	0xE4FE8B	No or bad configuration data/parameters were transferred. Possible cause: • You are accessing a read point that is not configured.
--	0xCC	0xE4FE8C	• Communication error between Ident profile and communications module. Handshake error. – UDT of this communications module is overwritten by other program sections – Check parameter settings of communications module in the UDT – Check the Ident profile command that caused this error – Start "INIT" after correcting the error • Backplane bus / PROFIBUS DP / PROFINET error occurred This error is only indicated when access monitoring has been enabled in the PROFIBUS configuration. – Backplane bus / PROFIBUS DP / PROFINET bus connection was interrupted (wire break on the bus; bus connector on the communications module was briefly unplugged) – Backplane bus / PROFIBUS DP / PROFINET master no longer addressing communications module – Execute "INIT" – The communications module has detected a frame interruption on the bus. The backplane bus, PROFIBUS or PROFINET may have been reconfigured (e.g. with HW Config or TIA Portal)
2 Hz	0xCD	0xE4FE8D	• Firmware error Possible cause: The firmware update was not run completely. • Internal communications error of the communications module/reader – Connector contact problem on the communications module/reader – Hardware of the communications module/reader has a defect; → Send in communications module/reader for repair – Start "INIT" after correcting the error • Internal monitoring error of the communications module/reader – Program execution error on the communications module / reader – Turn the power supply of the communications module/reader off and on again – Start "INIT" after correcting the error
2 Hz	0xCE	0xE4FE8E	The current command was aborted by the "WRITE-CONFIG" ("INIT" or "SRESET") command for the bus connector was pulled. Possible causes: • Communication with the transponder was aborted by "INIT". • This error can only be reported if there is an "INIT" or "SRESET".
2 Hz	0x51	0xE5FE01	Incorrect sequence number order (SN) on the reader/communications module.
--	0x52	0xE5FE02	Incorrect sequence number order (SN) in the Ident profile

"ER" LED	XML/ LED (hex)	PLC block (hex)	Error description
2 Hz	0x54	0xE5FE04	Invalid data block number (DBN) on the reader/communications module
--	0x55	0xE5FE05	Invalid data block number (DBN) in the Ident profile
2 Hz	0x56	0xE5FE06	Invalid data block length (DBL) on the reader/communications module
--	0x57	0xE5FE07	Invalid data block length (DBL) in the Ident profile
2 Hz	0x58	0xE5FE08	The previous command is still active or the buffer is full. A new command was sent to the reader or communications module although the last command is still active. • The active command can only be aborted with "INIT". • Before a new command can be started, "DONE bit = 1" must be set (exception: "INIT"). • Two Ident profile calls had the same "HW_ID", "CM_CHANNEL" and "LADDR" parameter settings. • Two Ident profile calls are using the same pointer. • After eliminating the error, an "INIT" must be executed. • When working with command repetition (e.g., fixed code transponder), no data is being fetched from the transponder. The data buffer on the reader/communications module has overflowed. Transponder data has been lost.
--	0x59	0xE5FE09	The reader/communications module runs a hardware reset ("INIT_ACTIVE" set to "1"). The Ident profile expects an "INIT" (bit 15 in the cyclic control word).
--	0x5A	0xE5FE0A	The "CMD" command code and the relevant acknowledgement do not match. This can be a software error or synchronization error that cannot occur in normal operation.
--	0x5B	0xE5FE0B	Incorrect sequence of acknowledgement frames (TDB / DBN)
--	0x5C	0xE5FE0C	Synchronization error (incorrect increment of AC_H / AC_L and CC_H / CC_L in the cyclic control word). "INIT" had to be executed.
--	--	0xE5FE81	Communications error between reader and communications module Access denied
--	--	0xE5FE82	Communications error between reader and communications module Resource is occupied
--	--	0xE5FE83	Communications error between reader and communications module Functional error of the serial interface
--	--	0xE5FE84	Communications error between reader and communications module Other faults/errors
2 Hz	0x61	0xE6FE01	Unknown command An uninterpretable XML command was sent to the reader or the Ident profile sends an uninterpretable command to the reader. Possible causes: • The "AdvancedCmd" block was supplied with an incorrect "CMD". • The "CMD" input of the "AdvancedCmd" block was overwritten.
--	0x62	0xE6FE02	Invalid command index (CI)

"ER" LED	XML/ LED (hex)	PLC block (hex)	Error description
2 Hz	0x63	0xE6FE03	• A parameter of an XML command has an invalid value or the parameter assignment of the communications module or the reader was incorrect. Possible causes / action to be taken: – Check the parameters in the Ident profile. – Check the relevant XML command. – Check the parameter assignment in HW Config / STEP 7 (TIA Portal). – The "WRITE-CONFIG" command has incorrect parameter settings. – After a startup, the reader or communications module has still not received an "INIT". • The parameter assignment of the reader or communications module on PROFIBUS/PROFINET was incorrect and the command cannot be executed. Possible causes / action to be taken: – Length of the input/output areas is too small for the cyclic I/O word. – Check whether you have used the correct GSD file. – User data length set with the command (e.g. "READ") is too high. • Error when processing the command. Possible causes / action to be taken: – The data in "AdvancedCmd" or "IID_CMD_STRUCT" is incorrect (e.g. "WRITE" command with length = 0). Check "AdvancedCmd" or "IID_CMD_STRUCT" and execute an "INIT". – The hardware of the reader/communications module is defective. The reader or communications module receives bad data with an "INIT". – The AB byte does not match the user data length. • The wrong reset block was selected. Possible causes / action to be taken: – Regardless of the selected reader system, use the "Reset_Reader" function block.
--	0x64	0xE6FE04	Presence error A transponder has passed through the transmission window of a reader without being processed. • This error message is not reported immediately. Instead, the reader or communications module waits for the next write / read command. This command is replied to immediately with this error and the write/read command is not executed. The next command is executed normally again by the reader/communications module. • You can reset this error status using an "INIT". • Bit 2 is set in the "OPT1" parameter and there is no transponder in the transmission window.

"ER" LED	XML/ LED (hex)	PLC block (hex)	Error description
--	0x65	0xE6FE05	An error has occurred that makes a Reset_Reader ("WRITE-CONFIG" with "Config = 3") necessary. Possible causes / action to be taken: • The "WRITE-CONFIG" command is incorrect. • After eliminating the error, execute an "INIT". • Check the "IID_HW_CONNECT" parameter.
--	0x66	0xE6FE06	The reset timer has expired.
2 Hz	0xE1	0xE6FE81	A parameter is missing.
2 Hz	0xE2	0xE6FE82	The parameter has an invalid format.
2 Hz	0xE3	0xE6FE83	The parameter type is invalid.
2 Hz	0xE4	0xE6FE84	Unknown parameter.
2 Hz	0xE5	0xE6FE85	The command or the frame has an invalid format.
2 Hz	0xE6	0xE6FE86	The inventory command failed.
2 Hz	0xE7	0xE6FE87	Read access to the transponder failed.
2 Hz	0xE8	0xE6FE88	Write access to the transponder failed.
2 Hz	0xE9	0xE6FE89	Writing the EPC-ID on the transponder failed.
2 Hz	0xEA	0xE6FE8A	Enabling write protection on the transponder failed.
2 Hz	0xEB	0xE6FE8B	The "Kill" command failed.
2 Hz	0x71	0xE7FE01	In this status, only the "Reset_Reader" command ("WRITE-CONFIG") is permitted.
--	0x72	0xE7FE02	The "CMD" command code is not permitted.
--	0x73	0xE7FE03	The "LEN_DATA" parameter of the command is too long and does not match the global data reserved within the send data buffer (TXBUF).
--	0x74	0xE7FE04	The receive data buffer (RXBUF) or the send data buffer (TXBUF) is too small, the buffer created at TXBUF/RXBUF does not have the correct data types or the parameter "LEN_DATA" as a negative value. Possible cause / action to be taken: • Check whether the buffers TXBUF/RXBUF are at least as large as specified in LEN_DATA. • With S7-1200/1500: – In the Ident profile, only an "Array of Byte" may be created for TXBUF and RXBUF. – In the "Reader_Status" block, only an "Array of Byte" or the corresponding data types ("IID_TAG_STATUS_XX_XXX" or "IID_READER_STATUS_XX_XXX") may be created
--	0x75	0xE7FE05	Error message that informs you that only an "INIT" command is permitted as the next command. All other commands are rejected.
--	0x76	0xE7FE06	Wrong index Permitted index is in the ranges "101 ... 108" and "-20401 ... -20418".
--	0x77	0xE7FE07	The reader or communications module does not respond to "INIT" ("INIT_ACTIVE" is expected in the cyclic status message). The next steps: • Check the address parameter "LADDR".
--	0x78	0xE7FE08	Timeout during "INIT" (60 seconds according to "TC3WG9")

"ER" LED	XML/ LED (hex)	PLC block (hex)	Error description
--	0x97	0xE7FE09	Command repetition is not supported.
--	0x7A	0xE7FE0A	Error during the transfer of the PDU (Protocol Data Unit).

"--" means that the error is not displayed by the LEDs.

Accessories 10

10.1 Wide-range power supply unit for SIMATIC RF systems

10.1.1 Features

The wide range power supply unit for SIMATIC RF systems is a primary switched device for supplying power and for use on single phase AC systems. The two DC outputs (sockets) are connected in parallel and protected by a built-in voltage limiting circuit against overload and short-circuits.

The device is vacuum-cast and prepared for Safety Class I applications. The EU and UK versions satisfy the low-voltage directive as well as the current EU standards for CE conformity. Furthermore, the US version has been UL-certified for the US and Canada.

Table 10- 1 Wide-range power supply unit for SIMATIC RF systems

	Characteristics	
	Area of application	Voltage supply for Siemens Ident devices
	Degree of protection	IP67
	Design features	• Mechanically and electrically rugged design • Short-circuit and no-load stability • Suitable for frame mounting
	Structure	① Network connector (PE) ② DC output 1 ③ DC output 2 ④ Ground connection

10.1.2 Scope of supply

- Wide-range power supply unit for SIMATIC RF systems
- Country-specific power cable (2 m)
- Protective cover for flange outlet
- Operating Instructions

10.1.3 Ordering data

Table 10- 2 Ordering data for the wide-range power supply unit for SIMATIC RF systems

	Article number
Wide-range power supply unit for SIMATIC RF systems (100 - 240 VAC / 24 VDC / 3 A) with 2 m connecting cable with country-specific power cable/plug	EU: 6GT2898-0AC00
	UK: 6GT2898-0AC10
	US: 6GT2898-0AC20

Table 10- 3 Ordering data accessories for the wide-range power supply unit for SIMATIC RF systems

			Article number
24 V DC connecting cable for SIMATIC RF600 readers RF610R/RF615R/RF650R/RF680R/RF685R			
	• With plug	5 m	6GT2891-0PH50
	• With open ends	2 m	6GT2891-4EH20
	• With open ends	5 m	6GT2891-4EH50
24 VDC connecting cable for readers of the SIMATIC product family MOBY D		5 m	6GT2491-1HH50
24 V DC connecting cable for SIMATIC RF200/RF300 readers with RS232		5 m	6GT2891-4KH50
24 V DC connecting cable for SIMATIC RF200 / RF300 readers with RS-232 M8 plug at the 24 V end, reader plug angled		5 m	6GT2891-4KH50-0AX1
24 VDC connecting cable for SIMATIC RF200 / RF300 readers with open ends at the power supply unit end		5 m	6GT2891-4KH50-0AX0

10.1.4 Safety Information

WARNING

Danger to life

It is not permitted to open the device or to modify the device.

The following must also be taken into account:

- Failure to observe this requirement shall constitute a revocation of the CE approval, UL certification for the US and Canada as well as the manufacturer's warranty.
- For installation of the power supply, compliance with the DIN/VDE requirements or the country-specific regulations is essential.
- The area of application of the power supply unit is limited to "Information technology equipment" within the scope of validity of the EN 60950/VDE 0805 standard.
- When the equipment is installed, it must be ensured that the mains socket outlet is freely accessible.
- Within the operating temperature range of the power supply unit, above an ambient temperature of +25 °C, very high temperatures (max. approx. +81.5 °C at an ambient temperature of +70 °C) can occur on the housing due to the internal heating of the device. In this case, make sure that the housing is covered in order to protect people from coming into contact with the hot housing. Adequate ventilation of the power supply must be maintained under these conditions.

Note

Operating range und use of the wide-range power supply unit

The wide-range power supply unit must only be used for SIMATIC products in the specifically described operating range and for the documented intended use.

NOTICE

Liability

If the wide input range power supply for SIMATIC RF systems is connected to third-party products, the end user is responsible and liable for operation of the system or end product that includes the wide input range power supply for SIMATIC RF systems.

Note the conditions specified in the UL approval.

NOTICE
Restriction to the approval of the wide-range power supply Alterations to the SIMATIC RFID modules and devices as well as the use of SIMATIC RFID components with third-party RFID devices are not permitted. Failure to observe this requirement shall constitute a revocation of the radio equipment approvals, CE approval and manufacturer's warranty. Furthermore, the compliance to any salient safety specifications of VDE/DIN, IEC, EN, UL and CSA will not be guaranteed.

Safety notes for the US and Canada

The readers of the SIMATIC RF600 series may only be operated with the wide range power supply unit for SIMATIC RF systems - as an optional component – or with power supply units that are UL-listed in combination with the safety standards specified below:

- UL 60950-1 - Information Technology Equipment Safety - Part 1: General Requirements
- CSA C22.2 No. 60950 -1 - Safety of Information Technology Equipment

NOTICE
Warranty The compliance of the SIMATIC RFID systems to the safety standards mentioned above and the conditions in the UL approval will not be guaranteed if neither the wide-range power supply unit for SIMATIC RF systems nor power supplies listed according to the safety standards named are used.

10.1.5 Mounting & connecting

The wide-range power supply unit for SIMATIC RF systems is sold with a country-specific power cable for EU, UK and US.

Note

Country-specific adaptation of the connector

When necessary, the primary cable can be adapted to country-specific conditions. The connector can be replaced by a country-specific connector.

If you do this, make sure that the protective conductor is connected in the connector and that grounding is ensured. If the protective conductor cannot be connected through the plug, you must connect the grounding connection to the mounting hole ④ provided by the metal shoe.

Follow the steps below to mount and connect the wide-range power supply unit:

1. Mount the wide-range power supply using the 4x screws.

   Remember to make the grounding connection with the mounting hole ④ provided by the metal shoe.

   For detailed information on grounding and compliance with the EMC directives, refer to the "Grounding connection" section below.
2. Connect the reader to the outputs ② and ③ of the wide-range power supply unit.
3. Connect the power cable to the primary input (PE) ① of the wide-range power supply unit.
4. Connect the power cable of the wide-range power supply unit to the voltage supply.

NOTICE
Plugging/pulling the power supply cable Plugging or pulling the power cable of the wide-range power supply unit is only permitted when no voltage is applied (powered-down)

NOTICE
Strain on the power cable connector The power cable is attached to / removed from the power supply using the knurled nut integrated in the plug. Avoid twisting the plug once it is mounted. If high shock and vibration occurs, this stress must be absorbed by the power cable.

NOTICE
Restriction for maximum load If the readers are operated permanently at full load and the digital inputs/outputs are loaded with the maximum total current of 1.1 A, the maximum current consumption of a reader can reach 2 A. In this case, a maximum of one reader may be connected per wide-range power supply unit.

The wide-range power supply unit (protection class I, degree of protection IP67) has four mounting holes for securing the device.

Installation instructions

The power supply unit must be connected with the described connecting cables in the primary and secondary circuits. The connectors at the power supply unit end may only be removed or inserted when no voltage is applied. The degree of protection IP67 is only achieved with correctly connected and locked connectors. Adequate spacing around the power supply unit should be provided to ensure free convection. The connection of the voltage supply must be made taking into account the valid country-specific regulations. It must be possible to de-energize the power supply unit using a suitable device outside the voltage supply. The device is connected with connectors “L” to phase and “N” to the neutral conductor of the power network. The “PE” connector must be connected to the protective conductor (see dimensions and pin assignment). The power supply unit may only be operated with a connected protective conductor. The power supply unit is maintenance-free and contains no parts to be changed by the user. The power derating when operating at an ambient temperature of above 50 °C must be ensured by the user. The base area of the power supply unit is screwed onto the mounting plate or mounting wall using the four mounting holes (e.g. screw and washer M5). Optimum cooling by natural convection must be assured at the mounting location. When used where CSA C22.2 No 107.1-01 applies a separating element must be provided for the output circuit.

Grounding connection

For reasons of EMC, the device should also be grounded via the grounding connection ④, which is connected to the primary input (PE) ①. Ensure that this connection is as short as possible and has a cable cross-section of at least 10 mm². This will ensure that any faults occurring on the shielding can be dissipated as well as possible.

The grounding connection ④ must be electrically connected to the ground potential using a contact disc. Tighten the screw with a torque of ≈ 1.5 Nm.

Grounding connection		
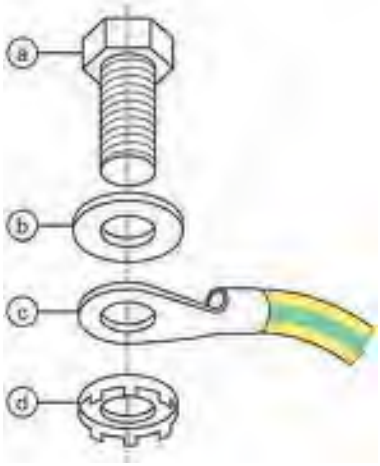	(a)	Hexagon-head screw (M5)
	(b)	Flat washer
	(c)	Cable lug
	(d)	Contact washer: To make ground contact, use contact washers according to the Siemens standard: SN 70093-6-FStflNnnc- 480h, Siemens item no.: H70093-A60-Z3

Degree of protection

The wide-range power supply unit for SIMATIC RF systems meets degree of protection IP67.

- Dust-tight: No ingress of dust
- Protected against harm from temporary submersion in water: Water must not enter in amounts that can cause damage, if the housing is immersed in water 1 m deep for 30 minutes.

All information applies only when connected and locked. The assignment of degrees of protection is subject to standardized test methods. If no secondary cables are connected, close the secondary sockets with a protective cap.

10.1.6 Pin assignment of DC outputs and mains connection

Table 10- 4 Pin assignment of the DC outputs

	Assignment	
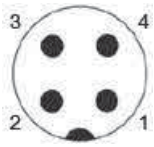	1	Ground (0 V)
	2	+24 VDC
	3	+24 VDC
	4	Ground (0 V)

Table 10- 5 Pin assignment of the mains connector

	Assignment	
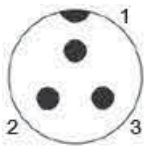	1	PE
	2	L (100 … 240 VAC)
	3	N (100 … 240 VAC)

10.1.7 Technical specifications

Table 10- 6 Technical specifications

	6GT2898-0ACx0
Product type designation	Wide-range power supply unit for SIMATIC RF systems
Electrical data	
Insulation strength (prim./sec.) $U_{isol\ p/s}$	AC 3.3 kV Primary- secondary side are galvanically isolated
Insulation resistance R_{ins}	> 1 GΩ
Leakage current I_{leak}	< 200 µA at U_{in} = 230 VAC, f = 50 Hz
Mains buffering t_h	≥ 50 ms at U_{in} = 230 VAC
Power supply unit classification	Level 3 acc. to CSA

	6GT2898-0ACx0
Mechanical specifications	
Housing	
• Material	• Polyamide, glass-fiber reinforced • Casting compound: Polyurethane
• Color	• Black
Housing classification	UL94-V0
MTBF in years	255
Permitted ambient conditions	
Ambient temperature	
• During operation	• -25 … +70 °C
• During transportation and storage	• -40 … +85 °C
Self-heating on full-load	max. 45 K
Surface temperature	Max. +81.5 °C
Degree of protection to EN 60529	IP67
Protection class according to SELV/PELV	Separation of output voltage according to EN 60950-1 / EN 50178
Electrical safety	EN 60950 / UL 60950 / CAN/CSA 22.2 950, 3 Edition
Conducted interference	EN 61000-6-3 / EN 55011 Class B
Noise emission	EN 61000-6-3 / EN 55011 Class B
Noise immunity	
• ESD	• EN 61000-6-2 / EN 61000-4-2 Contact discharge: 4 kV (air discharge): 8 kV
• Burst	• EN 61000-6-2 / EN 61 000-4-4 Symmetrical: 2 kV Asymmetrical: 2 kV
• Surge	• EN 61000-6-5 / EN 61 000-4-5 Symmetrical: 1 kV asymmetrical 2 kV
• HF field	• EN 61000-6-2 / EN 61000-4-3 10 V, 3 V, 1 V (80 MHz ... 2.7 GHz)
HF coupling	EN 61000-6-2 / EN 61000-4-6 10 V_{eff}
Line interruption	EN 61000-6-2 / EN 61000-4-11

	6GT2898-0ACx0
Design, dimensions and weights	
Dimensions (L × W × H)	
• Without plug	• 140 × 85 × 35 mm
• With plug	• 172.7 × 85 × 35 mm
Weight	720 g
Technical specifications of the input	
Rated input voltage U_{in}	100 to 240 VAC
Input frequency f_{in}	50/60 Hz
Radio interference level	EN 55011/B
Switching frequency f_{sw}	approx. 70 kHz typ.
Connector type	7/8", 2-pin + PE 6 ... 8 mm
Technical specifications of the outputs	
Output voltage tolerance ΔU_{out}	$U_{out\ nom}$ ≤ +2 % / -1 % at U_{in} = 230 VAC, f = 50 Hz
Overvoltage protection	$U_{out\ nom}$ +20 % typ.
Noise ΔU_{LF}	≤ 1 % U_{out} at U_{in} = min., BW: 1 MHz
Noise ΔU_{HF}	≤ 2 % U_{out} U_{in} = min., BW: 20 MHz
Regulation	
• Line regulation	• ≤ 1.0% at U_{in} = min./max.
• Load regulation	• ≤ 1.0% at I_{out} = 10...90...10%
Short-circuit current I_{max}	105 ... 130 % I_{nom} at I_{nom} = 3 A (+50 °C)
Settling time t_R load variations	< 5 ms at I_{out} = 10...90...10 %
Temperature coefficient ε	0.01 % / K at T_A = -25 °C ... +70 °C
Overload behavior P_{over}	Constant current
Short-circuit protection/ No-load response	Continuous/no-load stability
Derating	2 % / K at T_A > +50 °C ... +70 °C
Connector type	M12, 4-pin two sockets

Table 10- 7 Output configurations

Input	Outputs U1 = U2	ILoad = I1 + I2	Efficiency (%)	Remarks
110 VAC	24 VDC	0 A	--	No-load protection
110 VAC	24 VDC	3 A	≥ 88	--
220 VAC	24 VDC	0 A	--	No-load protection
220 VAC	24 VDC	3 A	≥ 90	--

All values are measured at full-load and at an ambient temperature of 25 °C (unless specified otherwise).

10.1.8 Dimension drawing

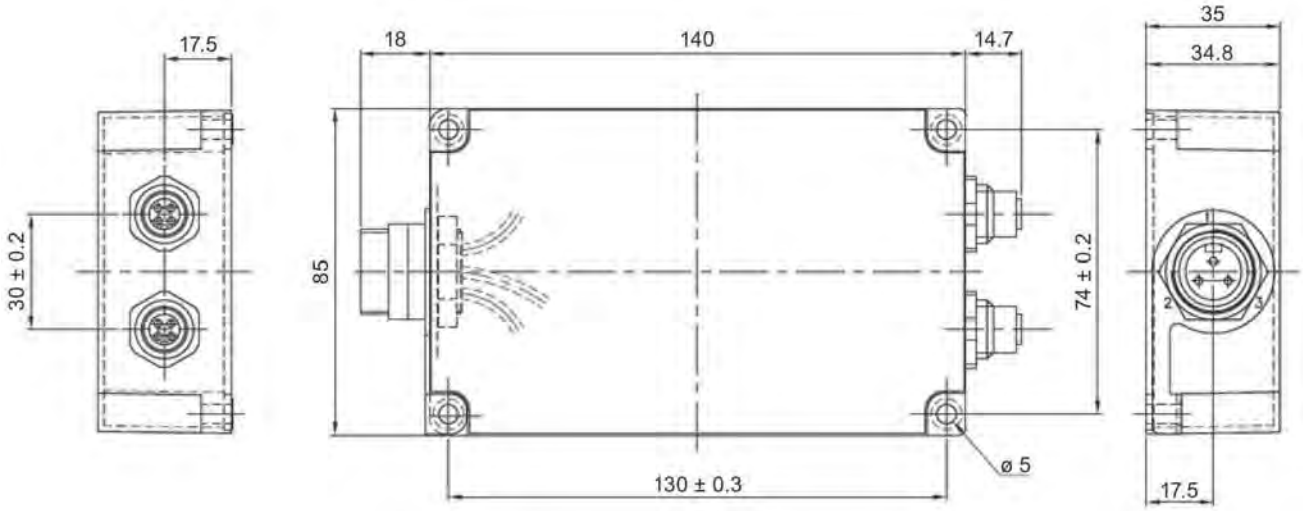

Figure 10-1 Dimension drawing wide-range power supply unit for SIMATIC RF systems

All dimensions in mm

10.1.9 Certificates and approvals

Table 10- 8 Approvals for wide-range power supply unit for SIMATIC RF systems (Europe, UK): 6GT2898-0AC00, 6GT2898-0AC10

Marking	Description
CE	CE approval acc. to • 2004/108/EG - EMC • 2006/95/EG - Voltage directive
EAC	Radio approval for Russia, Belarus, Kazakhstan

Table 10- 9 Approvals for wide-range power supply unit for SIMATIC RF systems (USA): 6GT2898-0AC20

Marking	Description
c UL us	This product is UL-certified for the US and Canada. It meets the following safety standards: • UL 60950-1 Information Technology Equipment - Safety - Part 1: General Requirements • CAN/CSA C22.2 No. 60950-1-07 Safety of Information Technology Equipment. • cURus +CB - UL/IEC 60950-1 and Limited power source under UL 1310 • UL Report E 205089

Engineering Conditions of Acceptability

For use only in or with complete equipment where the acceptability of the combination is determined by ULLLC. When installed in an end-product, consideration must be given to the following:

- Reference temperatures on the unit enclosure were measured during heating test. The max obtained temperature with condition C at Enclosure I was 81.5 °C. See chapter "Technical specifications (Page 488)" Additional Information for normal load condition details.
- The unit is completely encapsulated. Potting improve mechanical and thermal properties of the unit.
- The following Production-Line tests are conducted for this product: Electric Strength, Earthing Continuity
- The end-product Electric Strength Test is to be based upon a maximum working voltage of: Primary-Earthed Dead Metal: 300 Vrms, 342 Vpk; Primary-SELV: 300 Vrms, 613 Vpk
- The following secondary output circuits are SELV: 24 Vdc output of the unit.
- The following secondary output circuits are at non-hazardous energy levels: 24 Vdc output.
- The following secondary output circuits are supplied by a Limited Power Source: 24 Vdc output.
- The following output terminals were referenced to earth during performance testing: Terminal P4 (-) during DETERMINATION OF WORKING VOLTAGE - WORKING VOLTAGE MEASUREMENT TEST.
- The maximum investigated branch circuit rating is: 20 A
- The investigated Pollution Degree is: 2
- Proper bonding to the end-product main protective earthing termination is: Required
- An investigation of the protective bonding terminals has: Been conducted
- The following input terminals/connectors must be connected to the end-product supply neutral:

  Please see chapter "Mounting & connecting (Page 485)".
- The equipment is suitable for direct connection to: AC mains supply
- Output is supplied by circuit that complies with NEC Class 2 requirements (additional evaluation acc. UL1310 has been conducted during the product investigation).

10.2 Power splitter for RF600 systems

10.2.1 Characteristics

Using the power splitter, two antennas can be connected to one antenna connector of a reader. The power fed in at the input (S) is split over two outputs (1, 2).

Power splitter	Characteristics	
	Application	Designed for distributed mounting of antennas in warehouses, logistics and distribution
	Connectable readers	All readers of the RF600 system
	Connectable antennas[1)]	• SIMATIC RF615A • SIMATIC RF620A • SIMATIC RF640A • SIMATIC RF642A • SIMATIC RF650A • SIMATIC RF660A
	Degree of protection	IP40

1) the antenna RF680A cannot be operated via the power splitter.

10.2.2 Ordering data

Table 10- 10 Power splitter ordering data

	Article number
Power splitter	6GT2890-0BC00

Table 10- 11 Power splitter ordering data for accessories

		Article number
Antenna cable	1 m, 0.5 dB	6GT2815-0BH10
	3 m, 1 dB	6GT2815-0BH30
	5 m, 1.25 dB	6GT2815-2BH50
	10 m, 2 dB	6GT2815-1BN10
	10 m, 4 dB	6GT2815-0BN10
	15 m, 4.5 dB	6GT2815-2BN15
	20 m, 4 dB	6GT2815-0BN20
	40 m, 5 dB	6GT2815-0BN40

10.2.3 Example of a configuration

The following example of a configuration shows a setup with one RF680R reader, one power splitter and two RF650A antennas.

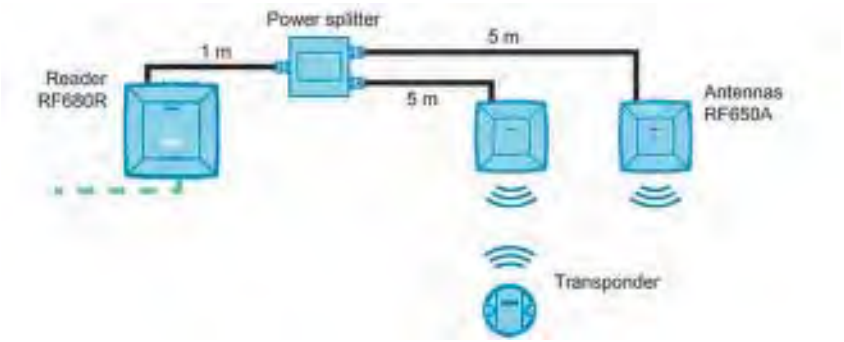

Figure 10-2 Example of a configuration with an RF600 system with a power splitter

The link between the reader and the power splitter (3.2 dB attenuation) is via a cable 1 m in length (0.5 dB cable attenuation). Cables with a length of 5 m (1.25 dB cable attenuation) are used between the power splitter and the antennas.

To calculate the total attenuation made up of the cable attenuation and the attenuation of the power splitter, the various attenuation values need to be added. For the configuration shown above, the total attenuation is as follows:

0.5 dB + 3.2 dB + 1.25 dB = 4.95 dB

The total attenuation of 4.95 dB must be stored in the configuration of the reader as user-defined cable attenuation. When using several different antennas, the antenna gain of the antenna with the highest gain must be specified. This ensures that the maximum permitted transmit power is not exceeded.

Note that when using different antenna cable lengths, the radiated power of the antenna with the longer cable is lower.

10.2.4 Technical specifications

Table 10- 12 Technical specifications

	6GT2890-0BC00
Product type designation	Power splitter
Electrical data	
Transmission frequency	500 ... 1000 MHz
Max. input power	10 W
Impedance	50 Ω
Attenuation between input and outputs	3.2 dB

	6GT2890-0BC00
Connector (input/outputs)	RP-TNC plug
Mechanical specifications	
Housing	
• Material	• Aluminum
• Color	• Silver
Permitted ambient conditions	
Ambient temperature	
• During operation	• -40 … +85 °C
• During transportation and storage	• -40 … +100 °C
Degree of protection to EN 60529	IP40
Design, dimensions and weights	
Dimensions (L × W × H)	
• Without plug	• 50.8 × 50.8 × 19.05 mm
• With plug	• 74.7 × 50.8 × 19.05 mm
Weight	170 g

10.2.5 Dimension drawing

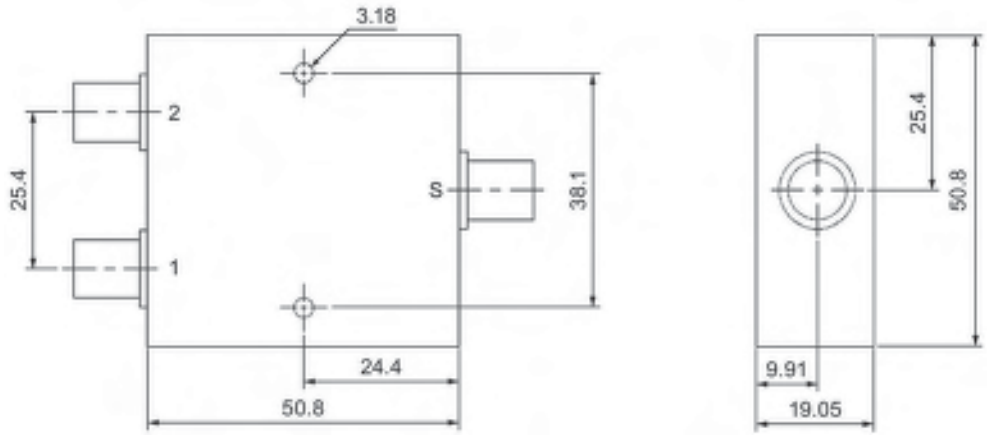

Figure 10-3 Power splitter dimension drawing

All dimensions in mm

10.3 Reader and antenna holders

10.3.1 Overview

The following read points (readers and antennas) have a standardized VESA 100 mounting system (4 x M4) and can be secured with a SIMATIC antenna holder:

- SIMATIC RF610R, RF615R, RF650R, RF680R, RF685R
- SIMATIC RF640A, RF642A, RF650A, RF660A, RF680A

10.3.2 Ordering data

Table 10- 13 Ordering data for SIMATIC antenna holder

Description	Article number
SIMATIC antenna holder for RF600 devices	6GT2890-2AB10

10.3.3 Mounting with the SIMATIC antenna holder

Flexible mounting is possible with the SIMATIC antenna holder. The RF600 readers/antennas can be rotated in any direction with this holder.

Follow the steps below to mount the SIMATIC antenna holder with the reader or the antenna on the wall:

1. Install the wall mounting plate (A) on the wall.
2. Install the articulated joint (B) with the screws ① on the wall mounting plate (A).
3. Fasten the reader or the antenna using the four bore holes on the antenna mounting plate (C).
4. Mount the antenna mounting plate (C) into the articulated joint (B) and fasten it with the help of screws ② to the articulated joint (B).
5. Align the SIMATIC antenna holder by sliding the setting angle on the articulated joint (B) and tighten all the screws.

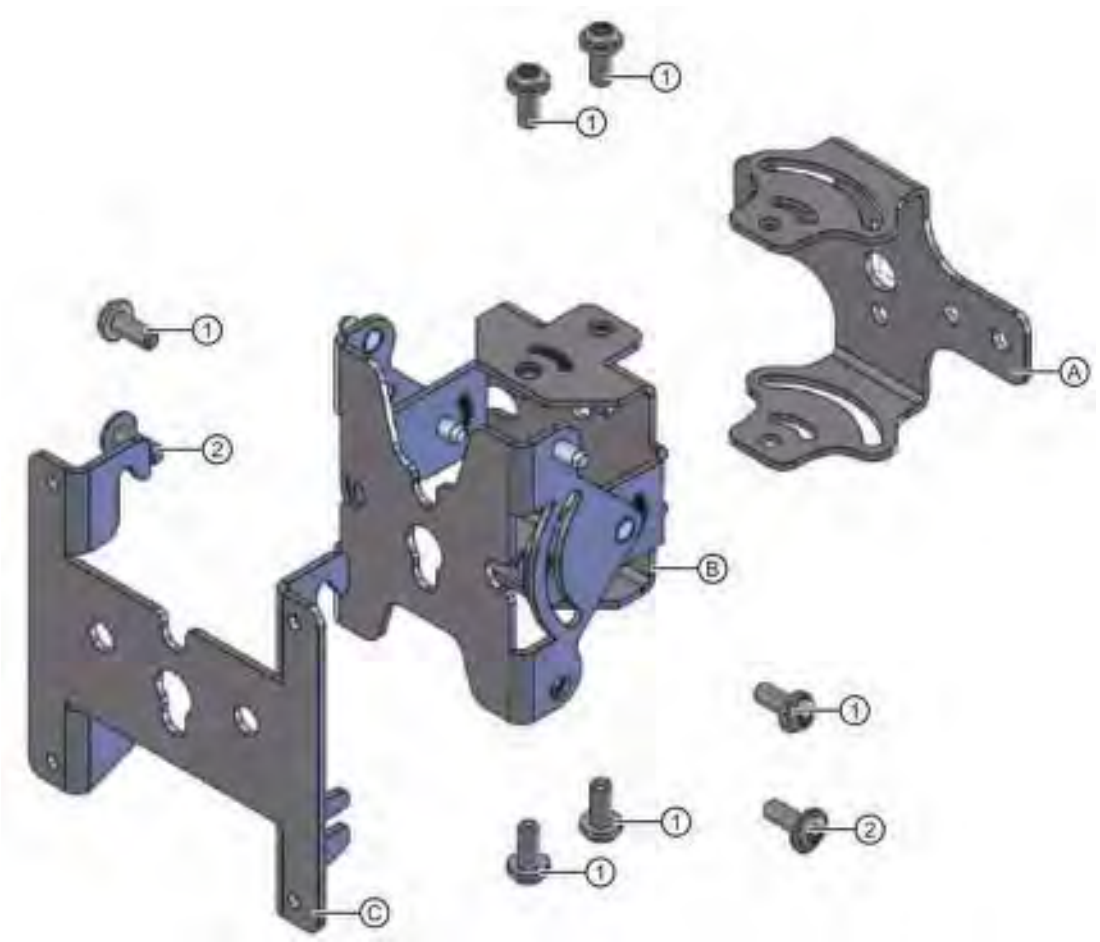

Figure 10-4 Installing the SIMATIC antenna holder

10.3.4 Dimension drawing

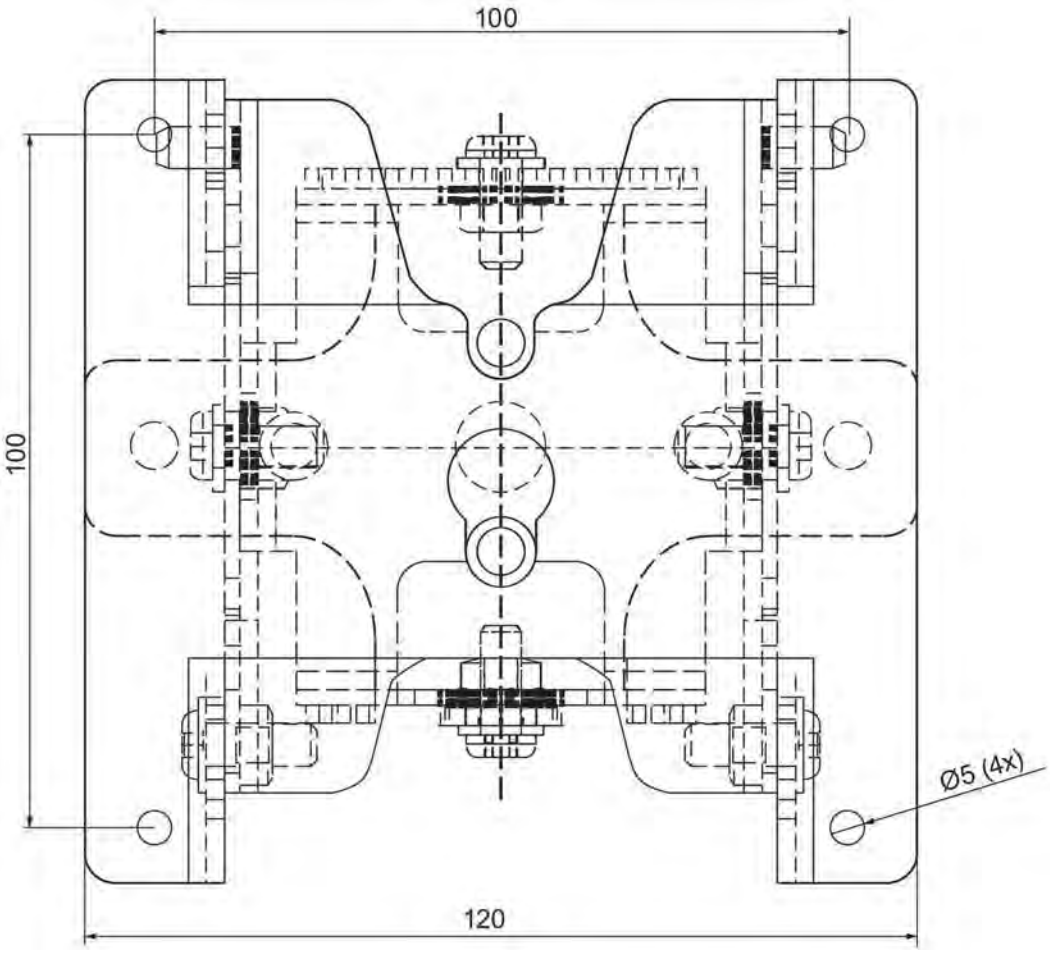

Figure 10-5 Front view

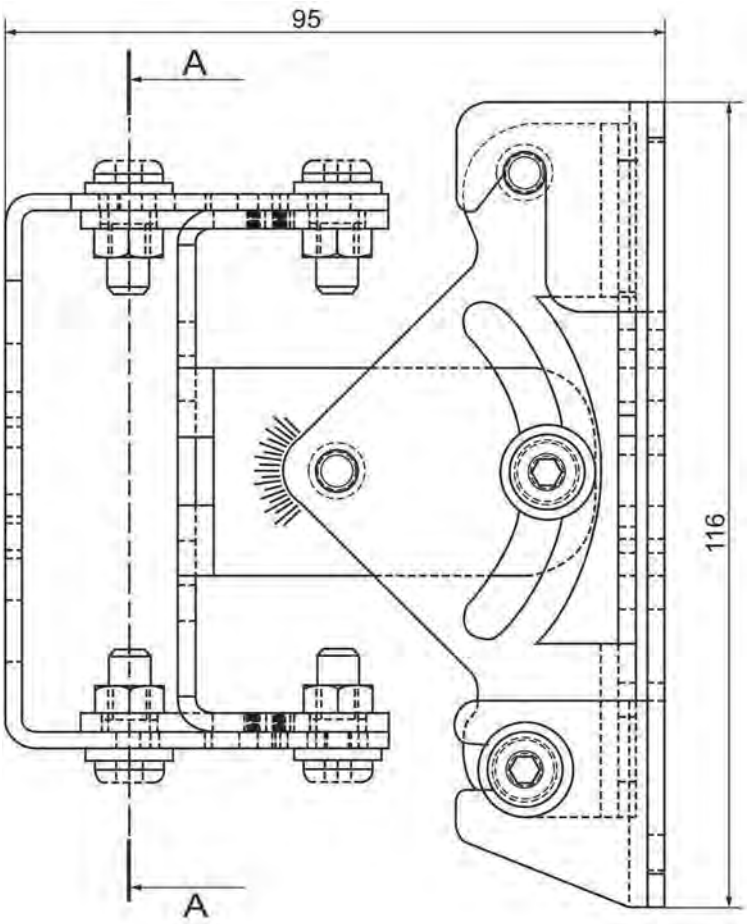

Figure 10-6 Top view with section A-A

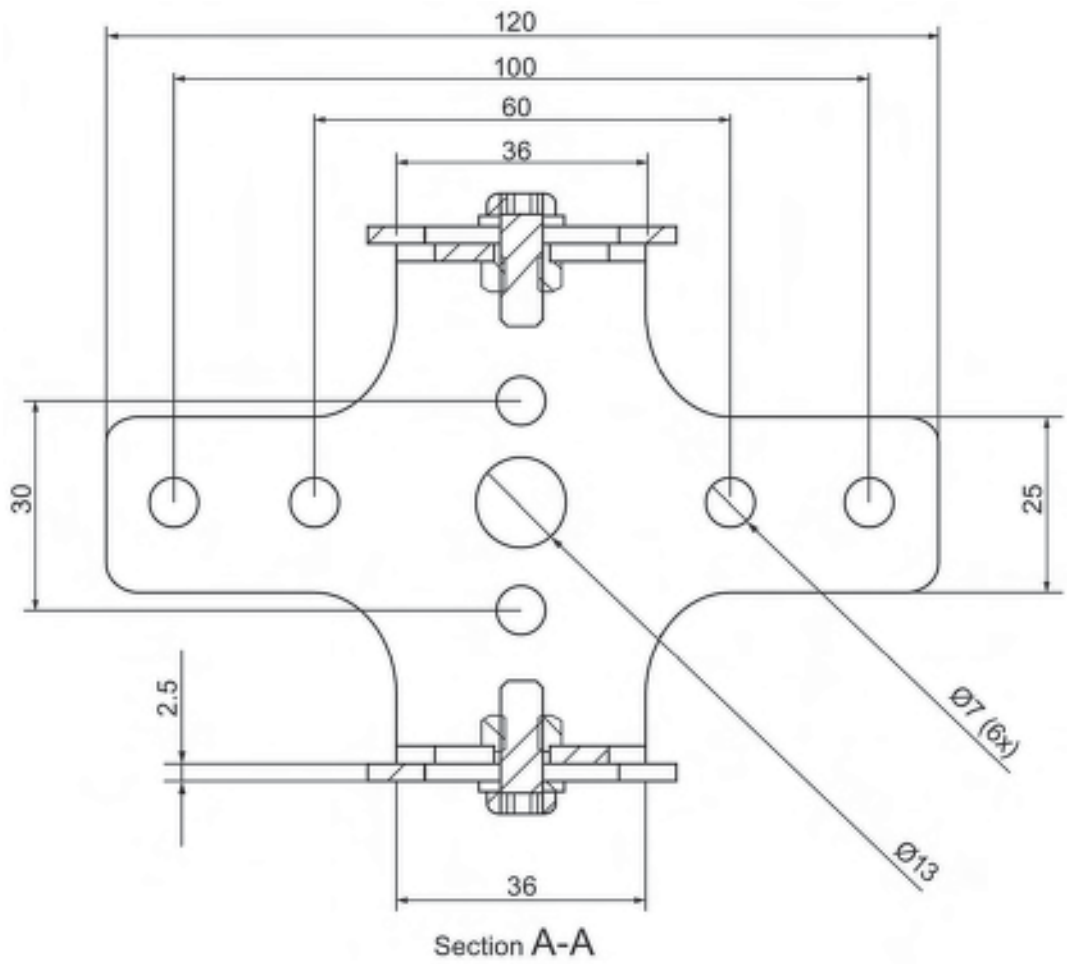

Figure 10-7 Section A-A

All dimensions in mm.

Appendix A

A.1 Certificates & approvals

All the latest RFID radio approvals are available on the Internet (http://www.siemens.com/rfid-approvals).

Labeling	Description
CE	Conformity acc. to the RED EU directive

Notes on CE marking

The following applies to the system described in this documentation:
The CE mark on a device indicates the corresponding approval.

DIN ISO 9001 certificate

The quality assurance system for the entire production process (development, production, and marketing) at Siemens fulfills the requirements of ISO 9001 (corresponds to EN29001: 1987).

This has been certified by DQS (the German society for the certification of quality management systems).

EQ-Net certificate no.: 1323-01

Country-specific approvals

Safety

If the device has one of the following markings the corresponding approval has been obtained:

Labeling	Description
UL	Underwriters Laboratories (UL) to UL 60950 Standard (I.T.E), or to UL508 (IND.CONT.EQ)
C UL	Underwriters Laboratories (UL) according to Canadian standard C22.2 No. 60950 (I.T.E) or C22.2 No. 142 (IND.CONT.EQ)
C US	Underwriters Laboratories (UL) according to standard UL 60950, Report E11 5352 and Canadian standard C22.2 No. 60950 (I.T.E) or UL508 and C22.2 No. 142 (IND.CONT.EQ)

Labeling	Description
	UL recognition mark
	Canadian Standard Association (CSA) according to the standard C22.2. No. 60950 (LR 81690) or acc. to C22.2 No. 142 (LR 63533)
NRTL	Canadian Standard Association (CSA) per American Standard UL 60950 (LR 81690) or per UL 508 (LR 63533)
	This product meets the requirements of the AS/NZS 3548 Norm.
Federal Communications Commission	FCC CFR 47, Part 15 sections 15.247 Radio Frequency Interference Statement This equipment has been tested and found to comply with the limits for a Class A digital device, pursuant to Part 15 of the FCC Rules.
Industry Canada Radio Standards Specifications	RSS-210 Issue 6, Sections 2.2, A8 RSS-247 Issue 2
CMIIT ID: XXXXYYZZZZ	China (CMIIT)
ANATEL	Brazil (ANATEL)
	South Korea (KCC)
	Japan (VCCI)
ICASA	South Africa (ICASA)
	EAC (Eurasian Conformity) Eurasian Economic Union of Russia, Belarus, Armenia, Kazakhstan and Kyrgyzstan Declaration of conformity according to the technical regulations of the customs union (TR ZU)
Marocco	When using the RF600 readers in Marocco, the frequency band is limited to 867.6 - 868 MHz and the radiant power to a maximum of 500 mW ERP. By selecting the country profile "Marocco" in Web Based Management (WBM), these settings are made automatically.

EMC

USA	
Federal Communications Commission Radio Frequency Interference Statement	This equipment has been tested and found to comply with the limits for a Class A digital device, pursuant to Part 15 of the FCC Rules. These limits are designed to provide reasonable protection against harmful interference when the equipment is operated in a commercial environment. This equipment generates, uses, and can radiate radio frequency energy and, if not installed and used in accordance with the instruction manual, may cause harmful interference to radio communications. Operation of this equipment in a residential area is likely to cause harmful interference in which case the user will be required to correct the interference at his own expense.
Shielded Cables	Shielded cables must be used with this equipment to maintain compliance with FCC regulations.
Modifications	Changes or modifications not expressly approved by the manufacturer could void the user's authority to operate the equipment.
Conditions of Operations	This device complies with Part 15 of the FCC Rules. Operation is subject to the following two conditions: (1) this device may not cause harmful interference, and (2) this device must accept any interference received, including interference that may cause undesired operation.

A.2 Service & support

Industry Online Support

In addition to the product documentation, the comprehensive online information platform of Siemens Industry Online Support at the following Internet address:
Link 1: (https://support.industry.siemens.com/cs/de/en/)

Apart from news, there you will also find:

- Project information: Manuals, FAQs, downloads, application examples etc.
- Contacts, Technical Forum
- The option submitting a support query:
  link 2: (https://support.industry.siemens.com/My/ww/en/requests)
- Our service offer:

  Right across our products and systems, we provide numerous services that support you in every phase of the life of your machine or system - from planning and implementation to commissioning, through to maintenance and modernization.

You will find contact data on the Internet at the following address:
Link 3: (http://w3.siemens.com/aspa_app)

RFID homepage

For general information about our identification systems, visit RFID home page (http://w3.siemens.com/mcms/identification-systems/).

Online catalog and ordering system

The online catalog and the online ordering system can also be found on the Industry Mall home page (https://mall.industry.siemens.com).

SITRAIN - Training for Industry

The training offer includes more than 300 courses on basic topics, extended knowledge and special knowledge as well as advanced training for individual sectors - available at more than 130 locations. Courses can also be organized individually and held locally at your location.

You will find detailed information on the training curriculum and how to contact our customer consultants at the following Internet address:

Link: (http://sitrain.automation.siemens.com/sitrainworld/)