SIEMENS

SIMATIC Ident

Auszug aus dem SYH "SIMATIC RF600"

Operating Instructions

Hinweis: Bei diesem Dokument handelt sich um ein Entwurfsdokument. Dieses Dokument ist nicht zur Veröffentlichung freigegeben.
Siemens übernimmt keine Haftung für die Vollständigkeit und Richtigkeit der Inhalte.

Note: This document is a draft document. This document is not released for publication.
Siemens accepts no liability for the completeness or correctness of the contents.

04/2023
C79000-G8976-C6xx-01

Legal information

Warning notice system

This manual contains notices you have to observe in order to ensure your personal safety, as well as to prevent damage to property. The notices referring to your personal safety are highlighted in the manual by a safety alert symbol, notices referring only to property damage have no safety alert symbol. These notices shown below are graded according to the degree of danger.

⚠ DANGER
indicates that death or severe personal injury **will** result if proper precautions are not taken.

⚠ WARNING
indicates that death or severe personal injury **may** result if proper precautions are not taken.

⚠ CAUTION
indicates that minor personal injury can result if proper precautions are not taken.

NOTICE
indicates that property damage can result if proper precautions are not taken.

If more than one degree of danger is present, the warning notice representing the highest degree of danger will be used. A notice warning of injury to persons with a safety alert symbol may also include a warning relating to property damage.

Qualified Personnel

The product/system described in this documentation may be operated only by **personnel qualified** for the specific task in accordance with the relevant documentation, in particular its warning notices and safety instructions. Qualified personnel are those who, based on their training and experience, are capable of identifying risks and avoiding potential hazards when working with these products/systems.

Proper use of Siemens products

Note the following:

⚠ WARNING
Siemens products may only be used for the applications described in the catalog and in the relevant technical documentation. If products and components from other manufacturers are used, these must be recommended or approved by Siemens. Proper transport, storage, installation, assembly, commissioning, operation and maintenance are required to ensure that the products operate safely and without any problems. The permissible ambient conditions must be complied with. The information in the relevant documentation must be observed.

Trademarks

All names identified by ® are registered trademarks of Siemens AG. The remaining trademarks in this publication may be trademarks whose use by third parties for their own purposes could violate the rights of the owner.

Disclaimer of Liability

We have reviewed the contents of this publication to ensure consistency with the hardware and software described. Since variance cannot be precluded entirely, we cannot guarantee full consistency. However, the information in this publication is reviewed regularly and any necessary corrections are included in subsequent editions.

Siemens AG
Digital Industries
Postfach 48 48
90026 NÜRNBERG
GERMANY

Ⓟ 04/2023 Subject to change

Copyright © Siemens AG 2023.
All rights reserved

Table of contents

1 SIMATIC RF695R 5

1.1 Characteristics 5

1.2 Ordering data 5

1.3 Pin assignment 7
1.3.1 Pin assignment of the power supply interface (X80) 7
1.3.2 Pin assignment of DI/DQ interface (X10) 8
1.3.3 Protective earthing connection 9

1.4 Planning operation 9

1.5 Mounting 10

1.6 Technical specifications 11

1.7 Dimension drawing 14

1.8 Certificates & approvals 14
1.8.1 FCC information 16
1.8.2 IC-FCB information 17

2 Reader and antenna holders 19

2.1 Antenna holder 3-way kit 20
2.1.1 Ordering data 20
2.1.2 Mounting with the antenna holder 21
2.1.3 Technical specifications 22
2.1.4 Dimension drawing 23

2.2 Aluminum holding plate 26
2.2.1 Order data 26
2.2.2 Technical specifications 26
2.2.3 Dimension drawing 27

2.3 Mounting kit for DIN/mounting rail 27
2.3.1 Order data 27
2.3.2 Securing onto a DIN/mounting rail 28

SIMATIC RF695R

1

1.1 Characteristics

The SIMATIC RF695R is a stationary reader in the UHF frequency range without an integrated antenna. Up to eight external UHF RFID antennas can be connected via RP-TNC connectors.

The maximum transmit power is 2000 mW at the reader output. A radiated power of up to 2000 mW ERP / 4000 mW EIRP is achieved when the appropriate antennas and antenna cables are used. The interfaces (Ethernet, power supply, DI/DQ interface) are located on the lower front edge. These interfaces can be used to connect the reader to the power supply and to a PC or a controller for parameter assignment.

The degree of protection is IP65.

	Pos.	Description
	①	RP-TNC interfaces for connecting up to 8 external antennas
	②	LED operating display
	③	Power supply interface (NEC Class 2): X80 (terminal block)
	④	DI/DQ interface: X10 (terminal block)
	⑤	CLP interface (Configuration license plug): CLP
	⑥	Ethernet interface: X1 LAN (RJ45)
	⑦	Protective Earthing (PE) connection
	⑧	Reset button: RESET

1.2 Ordering data

Table 1- 1 RF695R ordering data

Product	Article number
RF695R (ETSI)	6GT2811-7DD20-0AA0
RF695R (FCC)	6GT2811-7DD20-1AA0
RF695R (CMIIT)	6GT2811-7DD20-2AA0

Table 1- 2 Ordering data accessories

Product			Article number
SIMATIC RF600 antenna holder 3-way kit			6GT2890-2AB10
Connecting cable and connectors			
	• DI/DQ cable connector open cable ends	5 m	6GT2891-0CH50
	• Ethernet plug on the reader FastConnect M12 (IP65)		6GK1901-0DB20-6AA0
	• Ethernet plug Standard IE FastConnect RJ45 180 (IP20)		6GK1901-1BB10-2AA0
	• Industrial Ethernet cable M12 / RJ45	5 m	6XV1871-5TH50
	• Industrial Ethernet cable M12 / M12	5 m	6XV1870-8AH50
	• Industrial Ethernet connecting cable M12-180 / RJ45	2 m	6XV1871-5TH20
		3 m	6XV1871-5TH30
		5 m	6XV1871-5TH50
	• Industrial Ethernet cable by the meter, green (minimum 20 m)		6XV1840-2AH10
	• Connecting cable reader ↔ CM M12-180 / M12-180	2 m	6GT2891-4FH20
		5 m	6GT2891-4FH50
		10 m	6GT2891-4FN10
		20 m	6GT2891-4FN20
		50 m	6GT2891-4FN50
Connecting cable CM ↔ reader / extension cable for 24 V connecting cable RS422, M12 connector, 8-pin socket			
	• 2 m		6GT2891-4FH20
	• 5 m		6GT2891-4FH50
	• 10 m		6GT2891-4FN10
	• 20 m		6GT2891-4FN20
	• 50 m		6GT2891-4FN50
Wide-range power supply unit for SIMATIC RF systems			
	• With EU plug		6GT2898-0AC00
	• With UK plug		6GT2898-0AC10
	• With US plug		6GT2898-0AC20

Product		Article number
24 V connecting cable reader ↔ wide-range power supply unit		
	• with plug, 5 m	6GT2891-0PH50
	• with open ends, 2 m	6GT2891-4EH20
	• with open ends, 5 m	6GT2891-4EH50
Set of protective caps Contains 3 protective caps for antenna output, one protective cap for digital I/O interface and 2 protective caps for Ethernet/PROFINET (required for IP65 degree of protection when some connectors are unused)		6GT2898-4AA10

1.3 Pin assignment

1.3.1 Pin assignment of the power supply interface (X80)

Table 1- 3 Pin assignment of the power supply interface (reader side)

Interface view	Pin	Assignment	
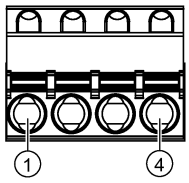	1	L2+	+ 24 V load supply
	2	M2-	Ground of load supply
	3	L1+	+ 24 V module/encoder supply
	4	M1	Ground of module/encoder supply

Note

Requirement for external power sources

The reader must only be supplied with power by power supply units that meet the requirements of LPS (Limited Power Source) and NEC Class 2.

Requirement for external power sources

The reader must only be supplied with power by power supply units that meet the requirementsof limited power source (LPS) and NEC Class 2.

Spécification des sources de tension externes

L'alimentation du plot de lecture/écriture doit être exclusivement assurée par des blocs d'alimentation conformes aux spécifications des sources à puissance limitée (Limited Power Sources LPS) et de NEC class 2.

Notes on connectors and cables

NOTICE
Insulate unused single wires Unused single wires must be insulated individually to prevent unwanted connections of signal lines.

NOTICE
For long cables: Adapt the power supply and transmission speed Note that even with long cables, the supply voltage of 24 VDC must always be guaranteed. Note also that the transmission speed on the serial interface must, if necessary, be reduced. SIMATIC standard cables (e.g. 6GT2891-4FN10) have a loop resistance of 160 mOhm / meter. This results in a voltage drop of 0.8 volts on the 24 V cable for every 10 meters of connecting cable and with a power requirement of 500 mA. If the power requirement increases through the use of the digital inputs/outputs, the voltage drop increases accordingly.

1.3.2 Pin assignment of DI/DQ interface (X10)

Table 1- 4 Pin assignment of the DI/DQ interface (reader end)

Interface view	Pin	Pin assignment	
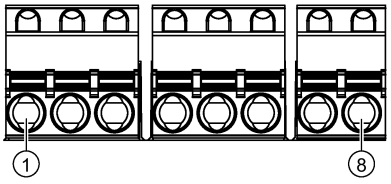	Digital input/output (3 pins)		
	1	1Us	Ground of module/encoder supply
	2	1M	Voltage output, galvanically connected
	3	DIQ	Digital input/output
	Digital input/output or IO-Link (3 pins)		
	4	1Us	Voltage output (L1+), galvanically connected
	5	1M	Voltage output (M1), galvanically connected
	6	C/Q	Digital input/output or IO-Link
	Power supply IO-Link class B (2 pins)		
	7	2UA	Infeed of load supply (L2+), galvanically isolated from L1+
	8	2M	Load supply, galvanically isolated

Note

Requirement for external power sources

When the DI/DQ interface is supplied with power by an external power source, this source must meet the requirements for LPS (Limited Power Sources) and NEC Class 2.

1.3.3 Protective earthing connection

On the bottom of the reader, there is a blind drill hole (M4 x 8) for protective earthing. Tighten the screw with a torque of ≈ 1.5 Nm.

WARNING

Hazardous voltage due to lightning strikes

Death or serious injury may occur as a result of lightning strikes to antennas mounted outside buildings.

If the reader is operated with antennas mounted outside buildings, the reader must be reliably connected to the protective earthing connection.

NOTICE

Installation only in protected areas

The antenna can be installed in the protected part of a building. When implementing your lightning protection concept, make sure you adhere to the VDE 0182 or IEC 62305 standards.

Protective earthing connection

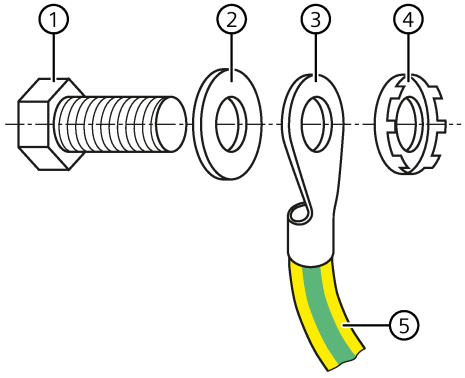

①	Screw (M4 x 8)
②	Flat washer
③	Cable lug
④	Contact washer
⑤	Minimum wire diameter > 1 mm^2 (AWG 18)

1.4 Planning operation

Antenna/reading point configurations

You can connect up to eight external antennas to the RF695R reader. The standard setting is that an antenna is connected when the reader is started. When connecting multiple antennas, note the information in the section "AUTOHOTSPOT".

With the WBM, you can set up various different configurations of antennas and/or reading points as required. Based on the number of data sources and subsequent assignment of the antennas, many tasks can be accomplished.

Examples of possible antenna reading point configurations

- Eight data sources with one antenna each for eight different reading points.
- Four data sources with two antennas each for small portals.
- One data source with 4 to 8 antennas for large portals.

You will find further information in the online help of the products.

1.5 Mounting

Requirement

NOTICE
Close unused connectors Note that the readers only have the specified degree of protection when all connectors are in use or when unused connectors are closed with the protective caps. Close any connectors on the reader that you are not using with protective caps. You can order the protective cap set using the article number specified in the section "Ordering data".

⚠ CAUTION
Radiation load The transmitter complies with the requirements of Health Canada and the FCC limit values for subjecting persons to HF radiation, provided that a minimum spacing of 20 cm exists between antenna and person. When the antennas are installed, you must therefore ensure that a minimum spacing of 20 cm is maintained between personnel and antennas.

Mounting options

The following mounting systems/holders are available for securing the readers:

- Mounting on a T35 DIN rail (S7-1200)
- SIMATIC RF600 antenna holder 3-way kit
  via a standardized VESA 100 mounting system (4 x M4, torque ≃ 1.5 Nm)
- VESA 100 mounting system (4 x M4, torque ≃ 1.5 Nm)

For detailed information on the mounting systems/holders and on mounting the readers, refer to the section "Reader and antenna holders (Page 19)". The positions of the mounting holes are shown in the section "Dimension drawing (Page 14)".

1.6 Technical specifications

Table 1- 5 Technical specifications of the RF695R reader

	6GT2811-7DD20-xAA0
Product type designation	SIMATIC RF695R
Radio frequencies	
Operating frequency	
• ETSI	• 865 to 868 MHz
• FCC	• 902 to 928 MHz
• CMIIT	• 920 to 925 MHz
• ARIB (STD-T106)	• 916.8 MHz to 920.4 MHz
Transmit power [1)]	
• ETSI	• 3 to 2000 mW
• FCC	• 3 to 2000 mW
• CMIIT	• 3 to 2000 mW
• ARIB (STD-T106)	• 3 to 1000 mW
Maximum radiated power per antenna	
• ETSI	• 2000 mW ERP
• FCC	• 4000 mW EIRP
• CMIIT	• 2000 mW ERP
• ARIB (STD-T106)	• 4000 mW EIRP
Electrical data	
Range	
• ETSI	• ≤ 8 m
• FCC	• ≤ 8 m
• CMIIT	• ≤ 8 m
• ARIB (STD-T106)	• ≤ 8 m
Protocol	ISO 18000-62/-63
Transmission speed	≤ 300 kbps
Frequency accuracy	≤ ±10 ppm

	6GT2811-7DD20-xAA0
Channel spacing	
• ETSI	• 600 kHz
• FCC	• 500 kHz
• CMIIT	• 250 kHz
• ARIB (STD-T106)	• 1200 kHz
Modulation methods	ASK: DSB modulation & PR-ASK modulation encoding, Manchester or Pulse Interval (PIE)
Multitag capability	Yes
Typical transmission time per byte	
• Write access	• 2 ms
• Read access	• 0.15 ms
Supply voltage	24 V DC (20 ... 30 V DC) [2)]
Maximum permitted current consumption	2 A
Maximum permitted current consumption via DI/DQ interface (1US)	200 mA
Maximum permitted current consumption via DI/DQ interface (2UA)	500 mA
Current consumption (on standby), typical	
• 20 V input voltage on the reader	• 220 mA / 4.4 W
• 24 V input voltage on the reader	• 190 mA / 4.5 W
• 30 V input voltage on the reader	• 150 mA / 4.5 W
Current consumption (at 1000 mW transmit power), typical	
• 20 V input voltage on the reader	• 450 mA / 9.0 W
• 24 V input voltage on the reader	• 380 mA / 9.1 W
• 30 V input voltage on the reader	• 300 mA / 9.6 W
Current consumption (at 2000 mW transmit power), typical	
• 20 V input voltage on the reader	• 610 mA / 12.2 W
• 24 V input voltage on the reader	• 500 mA / 12.0 W
• 30 V input voltage on the reader	• 410 mA / 12.3 W

Interfaces	
Antenna connectors	8x RP-TNC
Power supply	Terminal block (4-pin)
DI/DQ interface	2x terminal block (3-pin) 1x terminal block (2-pin)
Ethernet interface	RJ45, 1000 Mbps

	6GT2811-7DD20-xAA0
Mechanical specifications	
Material	
• Upper part of housing	• Polycarbonate (PC-GF10)
• Lower part of housing	• Aluminum
Color	
• Upper part of housing	• TI-Grey
• Lower part of housing	• Silver
Permitted ambient conditions	
Ambient temperature	
• During operation	• -25 ... +55 °C
• During transportation and storage	• -40 ... +85 °C
Degree of protection	IP32
Shock resistant according to EN 60068-2-27	25.5 g [3]
Vibrations according to EN 60068-2-6	3.1 g [3]
Design, dimensions and weight	
Dimensions (W × H × D)	209 × 245 × 41 mm
Weight	??? Kg
Type of mounting	
• Mounting rail	• Hanging
• VESA 100	• 4x M4 screws (≃ 1.5 Nm)
Operation indicator	3 LEDs
Standards, specifications, approvals	
Proof of suitability	EN 301 489-1 V1.9.2 / EN 301 489-3 V1.6.1 / EN 302 208-1/-3 V1.4.1 FCC CFR 47, Part 15 section 15.247
MTBF	28 years

[1] Measured at the output of the antenna socket.

[2] All supply and signal voltages must be safety extra low voltage (SELV/PELV according to EN 60950 or EN 62368). All voltage sources must meet the requirements of limited power sources (LPS) and NEC Class 2.
Note that, depending on the power consumption, using extension cables > 20 m (6GT2891-4FN50) may lead to a voltage drop on the reader. This voltage drop can mean that the necessary minimum voltage on the reader is below the required 20 V.

[3] The values for shock and vibration are maximum values and must not be applied continuously. These values only apply to mounting using screws.

1.7 Dimension drawing

@@@ Dimension drawing @@@

Dimension drawing of SIMATIC RF695R

All dimensions in mm (± 0.5 mm tolerance)

1.8 Certificates & approvals

Note

Marking on the readers according to specific approval

The certificates and approvals listed here apply only if the corresponding mark is found on the readers.

Table 1- 6 6GT2811-7DD20-0AA0

Labeling	Description
CE	Conformity with the RED directive 2014/53/EU Conformity with the RoHS directive 2011/65/EU
ICASA	South Africa radio approval: Radio Equipment Type Approval
India	India wireless approval Marking on the reader: No. NR-ETA/1589
EAC	Radio approval for Russia, Belarus, Kazakhstan

For information on which reader variant can be used in which country or region, refer to the "List of country profiles".

Table 1- 7 6GT2811-7DD20-1AA0

Labeling	Description
FC Federal Communications Commission	FCC CFR 47, Part 15 section 15.247 Radio Frequency Interference Statement This equipment has been tested and found to comply with the limits for a Class A digital device, pursuant to Part 15 of the FCC Rules. FCC ID: NXW-RF69xR
Industry Canada Radio Standards Specifications	RSS-210 Issue 6, Section 2.2, A8 IC: 267X-RF69xR, Model: RF695R

Labeling	Description
C US	This product is UL-certified for the USA and Canada. It meets the following safety standard(s): UL 60950-1 - Information Technology Equipment Safety - Part 1: General Requirements CSA C22.2 No. 60950 -1 - Safety of Information Technology Equipment UL Report E 115352
ANATEL	Brazil radio approval Marking on the reader (6GT2811-7DD20-0AA0): Statement about approval: Este equipamento opera em caráter secundário, isto é, não tem direito à proteção contra interferência prejudicial, mesmo de estações do mesmo tipo e não pode causar interferência a sistemas operando em caráter primário. Reader certificate: ANATEL 2892-15-4794
	KCC Certification Type of equipment: A급 기기 (업무용 방송통신기자재) Class A Equipment (Industrial Broadcasting & Communication Equipment) 이 기기는 업무용(A급) 전자파적합기기로서 판 매자 또는 사용자는 이 점을 주의하시기 바라 며, 가정외의 지역에서 사용하는 것을 목적으로 합니다. This equipment is Industrial (Class A) electromagnetic wave suitability equipment and seller or user should take notice of it, and this equipment is to be used in the places except for home. Certificate of the reader: MSIP-CMM-RF5-RF695R
HC-141617	Argentina radio approval: Registro de la COMISION NACIONAL DE COMUNICACIONES
RCPSISI14-1926-A2	Mexico radio approval: CERTIFICADO DE HOMOLOGACION, IFETEL
	Australia radio approval: This product meets the requirements of the AS/NZS 3548 Norm.

Table 1- 8 6GT2811-7DD20-2AA0

Standard	
CMIIT Certification	China radio approval Marking on the reader: CMIIT ID: 2014DJ3989

1.8.1 FCC information

Siemens SIMATIC RF695R (FCC): 6GT2811-7DD20-1AA0

FCC ID: NXW-RF600R2

This device complies with part 15 of the FCC rules. Operation is subject to the following two conditions:

(1) This device may not cause harmful interference, and

(2) this device must accept any interference received, including interference that may cause undesired operation.

Caution

Any changes or modifications not expressly approved by the party responsible for compliance could void the user's authority to operate the equipment.

Note

This equipment has been tested and found to comply with the limits for a Class B digital device, pursuant to part 15 of the FCC Rules.

These limits are designed to provide reasonable protection against harmful interference when the equipment is operated in a commercial environment. This equipment generates, uses, and can radiate radio frequency energy and, if not installed and used in accordance with the instruction manual, may cause harmful interference to radio communications. Operation of this equipment in a residential area is likely to cause harmful interference in which case the user will be required to correct the interference at his own expense.

FCC Notice

To comply with FCC part 15 rules in the United States, the system must be professionally installed to ensure compliance with the Part 15 certification.

It is the responsibility of the operator and professional installer to ensure that only certified systems are deployed in the United States. The use of the system in any other combination (such as co-located antennas transmitting the same information) is expressly forbidden.

FCC Exposure Information

To comply with FCC RF exposure compliance requirements, the antennas used for this transmitter must be installed to provide a separation distance of at least 20 cm from all persons and must not be co-located or operating in conjunction with any other antenna or transmitter.

1.8.2 IC-FCB information

Siemens SIMATIC RF685R (FCC): 6GT2811-7DD20-1AA0

IC: 267X-RF600R2

This device complies with Industry Canada licence-exempt RSS standard(s). Operation is subject to the following two conditions:

(1) This device may not cause interference, and

(2) this device must accept any interference, including interference that may cause undesired operation of the device.

In order to comply with ISED RF Exposure requirements, this device must be installed to provide at least 20 cm separation from the human body at all times

To comply with Industry Canada licence-exempt RSS standard(s), the system must be professionally installed to ensure compliance with IC certification.

Le présent appareil est conforme aux CNR d'Industrie Canada applicables aux appareils radio-exempts de licence. L'exploitation est autorisée aux deux conditions suivantes :

(1) l'appareil ne doit pas produire de brouillage, et

(2) l'appareil doit accepter tout brouillage radioélectrique subi, même si le brouillage est susceptible d'en compromettre le fonctionnement.

Afin de se conformer aux exigences d'exposition RF ISED, cet appareil doit être installé pour fournir au moins 20 cm de séparation du corps humain en tout temps.

Pour se conformer aux normes RSS exemptes de licence d'Industrie Canada, le système doit être installé par un professionnel afin d'assurer la conformité avec la certification IC.

Industry Canada Notice

To reduce potential radio interference to other users, the antenna type and its gain should be so chosen that the equivalent isotropically radiated power (e.i.r.p.) is not more than that permitted for successful communication.

Transmitter power and antenna information for antennas with a gain less than 6 dBi:

This device has been designed to operate with the SIMATIC RF615A antenna 902-928, the SIMATIC RF620A antenna 902-928, the SIMATIC RF622A antenna 902-928, the SIMATIC RF650A antenna 902-928, the SIMATIC RF680A antenna 902-928 as well as the SIMATIC RF660A antenna 902-928 listed below, and having a maximum gain of 5,5 dBi. Arbitrary transmission power settings in combination with other antennas or antennas having a gain greater than 5,5 dBi are strictly prohibited for use with this device.

The required antenna impedance is 50 Ohms.

Transmitter power and antenna information for antennas with a gain greater 6 dBi:

This device requires professional installation. Antennas with a gain greater 6 dBi may be used provided the system does not exceed the radiation power of 4000 mW E.I.R.P. This device has been designed to operate with the SIMATIC RF642A antenna 902-928 exceeding the maximum gain of 5,5 dBi under the restriction that the RF power at the input of the antenna must be set to meet the following relation: RF power (dBm) ≤ 30 dBm – (antenna gain (dBi) – 6 dBi) Other antennas or system configurations for antennas having a gain greater than 6 dBi are strictly prohibited for use with this device. The required antenna impedance is 50 Ohms.

Reader and antenna holders

2

Depending on the device used, the following mounting systems/holders are available to you to mount the respective readers and antennas:

SIMATIC RF600 antenna holder 3-way kit

The following readers and antennas have a standardized VESA 100 mounting system (4 x M4) and can be fixed to the antenna holder with this:

- SIMATIC RF610R, RF615R, RF650R, RF680R, RF685R, RF690R, RF695R
- SIMATIC RF642A, RF650A, RF660A, RF662A, RF680A

SIMATIC RF600 aluminum holding plate

The following readers and antennas, for example, can be mounted on a pedestal or in a frame using the holding plate:

- SIMATIC RF610R, RF615R
- SIMATIC RF615A, RF622A

Mounting kit for DIN/mounting rail

The SIMATIC RF650R, RF680R, RF685R readers can be mounted on one of the following DIN rails or mounting rails using an adapter kit:

- DIN rail T35 (S7-1200)
- S7-300 mounting rail
- S7-1500 mounting rail

The SIMATIC RF690R, RF695R readers can be mounted directly on a T35 DIN rail (S7-1200) without the use of an adapter kit.

2.1 Antenna holder 3-way kit

2.1.1 Ordering data

Table 2- 1 Order data of SIMATIC RF600 antenna holder 3-way kit

Description	Article number
SIMATIC RF600 antenna holder 3-way kit (stainless steel) for mounting readers and antennas	6GT2890-2AB10

2.1.2 Mounting with the antenna holder

Flexible mounting is possible with the antenna holder. The RF600 readers/antennas can be rotated in any direction with this holder.

Follow the steps below to mount the antenna holder with the reader or the antenna on the wall:

1. Install the wall mounting plate (A) on the wall.
2. Install the articulated joint (B) with the screws ① on the wall mounting plate (A).
3. Fasten the reader or the antenna using the four bore holes on the antenna mounting plate (C).
4. Mount the antenna mounting plate (C) into the articulated joint (B) and fasten it with the help of screws ② to the articulated joint (B).
5. Align the antenna holder by sliding the setting angle on the articulated joint (B) and tighten all the screws.

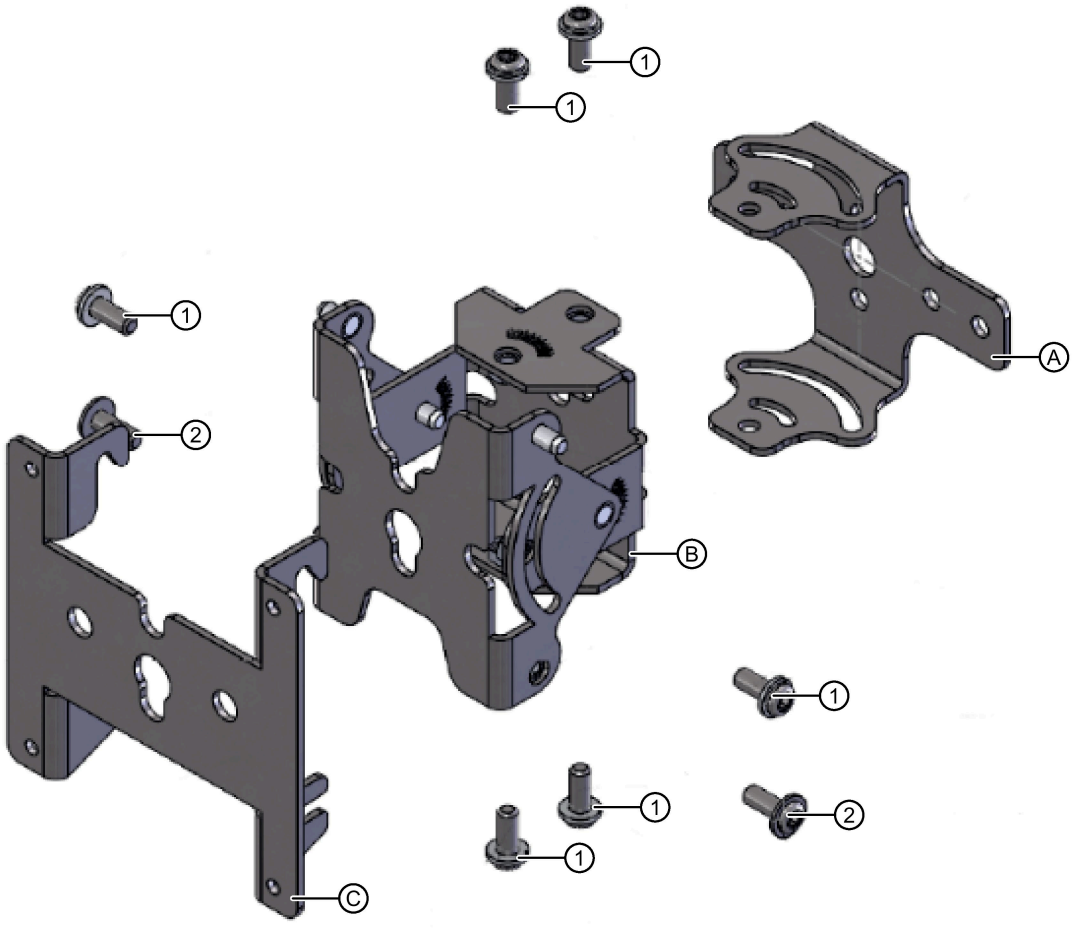

Figure 2-1 Mounting the antenna holder

2.1.3 Technical specifications

Table 2- 2 Technical specifications

	6GT2890-2AB10
Product designation	SIMATIC RF600 antenna holder 3-way kit
Mechanical specifications	
Material	Stainless steel
Color	Silver
Permitted ambient conditions	
Ambient temperature	
• During operation	-25 ... +85 °C
• During transportation and storage	-40 to +100 °C
Shock resistant according to EN 60068-2-27	30 g [1)]
Vibrations according to EN 60068-2-6	10 g [1)]
Design, dimensions and weight	
Dimensions (L x W x H)	120 × 115 × 95 mm
Weight	Approx. 750 g
Type of mounting	M6 x 16 mm torx-slotted screws (T30) with washers

[1)] The values for shock and vibration are maximum values and must not be applied continuously.

2.1.4 Dimension drawing

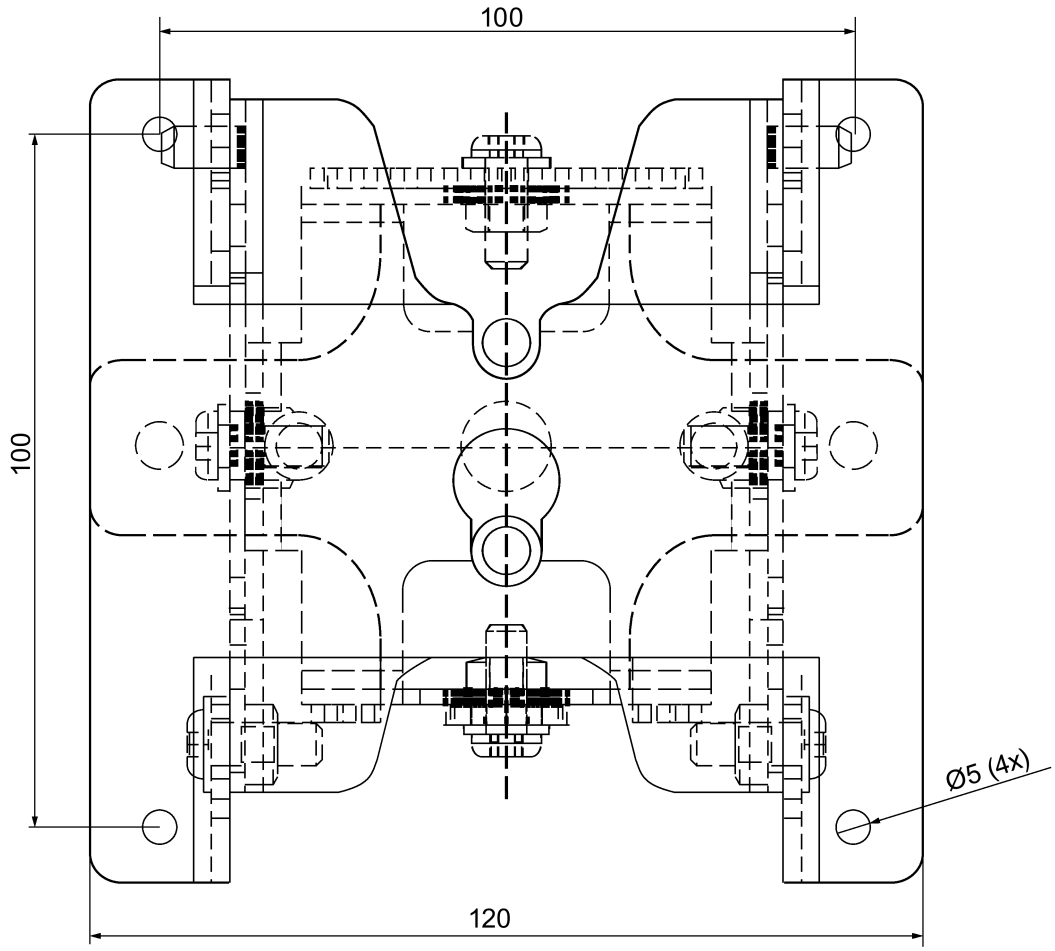

Figure 2-2 Front view

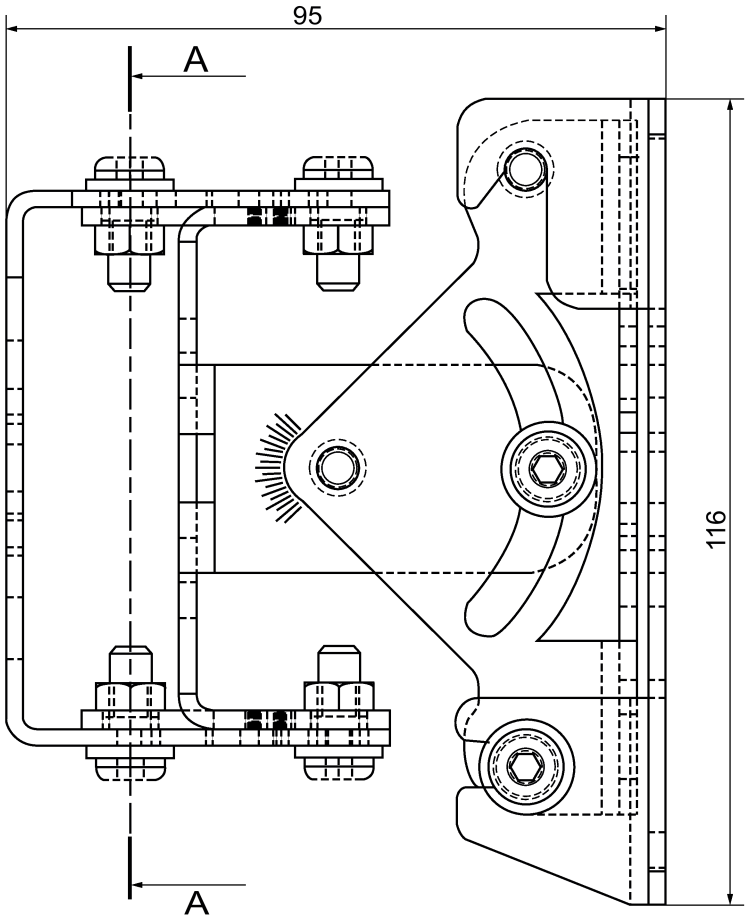

Figure 2-3 Top view with section A-A

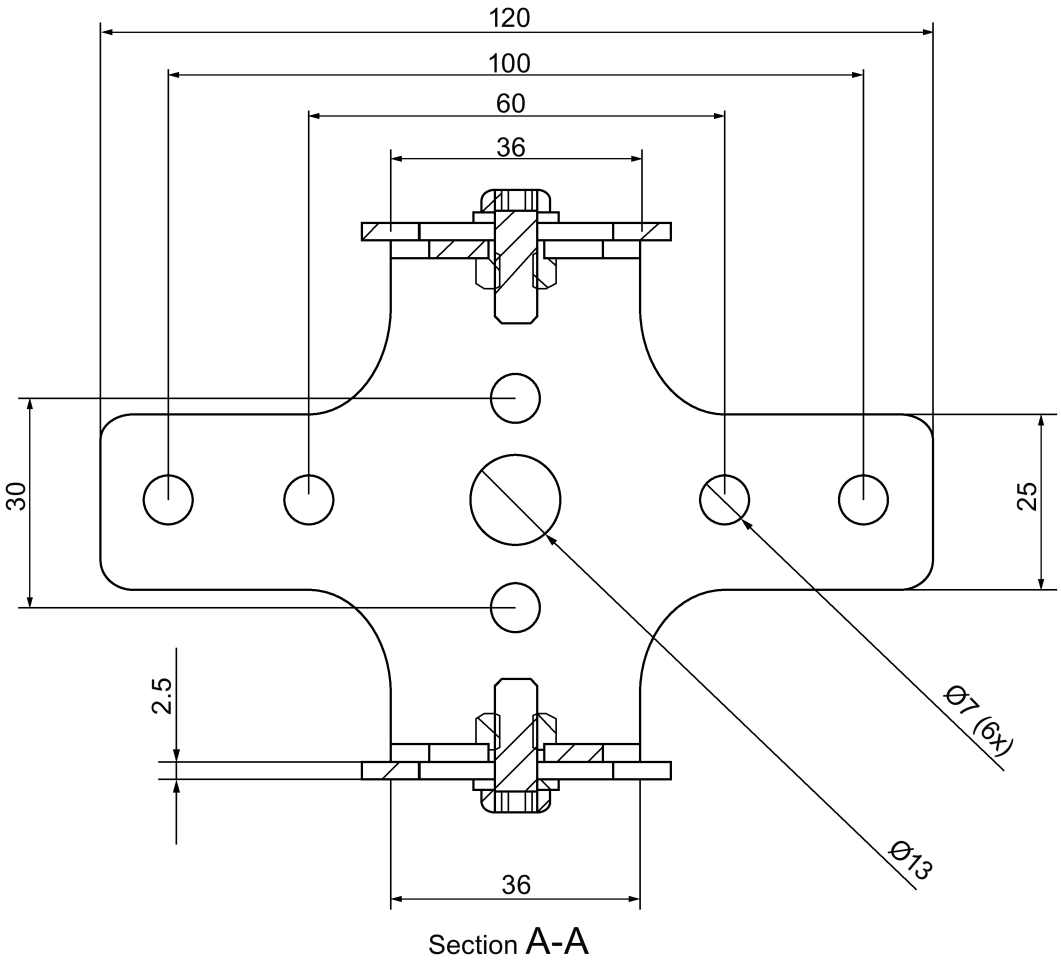

Figure 2-4 Section A-A

All dimensions in mm.

2.2 Aluminum holding plate

2.2.1 Order data

Table 2- 3 Order data for SIMATIC RF600 aluminum holding plate

Description	Article number
SIMATIC RF600 aluminum holding plate for mounting readers and antennas	6GT2890-2AC00

2.2.2 Technical specifications

Table 2- 4 Technical specifications

	6GT2890-2AC00
Product designation	SIMATIC RF600 aluminum holding plate
Mechanical specifications	
Material	Aluminum
Color	Silver
Design, dimensions and weight	
Dimensions (L x W x H):	180 × 130 × 2.5 mm
Weight	150 g

2.2.3 Dimension drawing

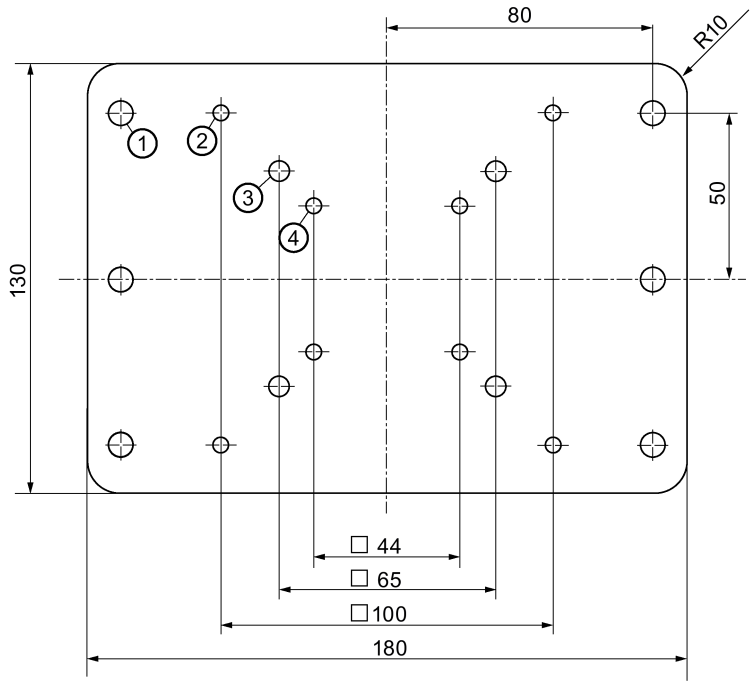

① Ø 7 mm (6x) for attachment to a pedestal
② Ø 5 mm (4x) for attaching the RF610R and RF615R readers to the holding plate
③ Ø 6 mm (4x) for attaching the RF622A antenna to the holding plate
④ Ø 5 mm (4x) for attaching the RF615A antenna to the holding plate

All dimensions in mm (tolerances according to DIN ISO 2768 – medium).

2.3 Mounting kit for DIN/mounting rail

2.3.1 Order data

Table 2- 5 Ordering data of mounting kit for DIN/mounting rail

Description	Article number
Mounting kit for DIN/mounting rail • DIN rail T35 (S7-1200) • S7-300 mounting rail • S7-1500 mounting rail	6GT2890-0AB00

2.3.2 Securing onto a DIN/mounting rail

Installation on a DIN rail

SIMATIC RF650R/RF680R/RF685R

Follow these steps to mount the SIMATIC RF650R, RF680R or RF685R readers on a DIN rail using the mounting kit:

Table 2- 6 DIN rail mounting

	Description	
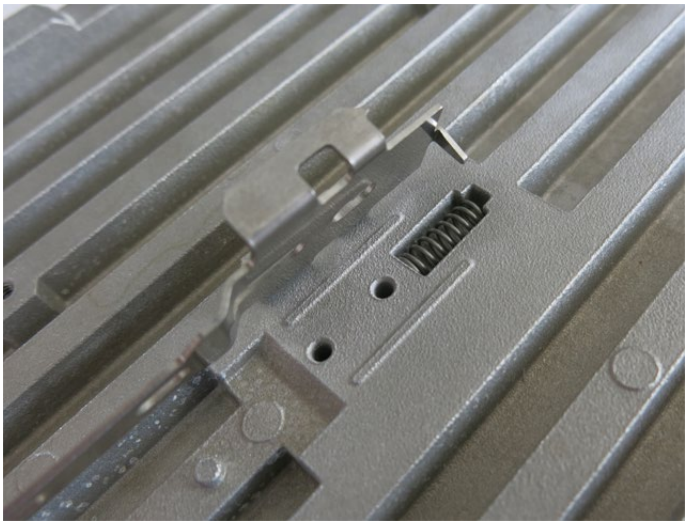	1.	Place the spring in the groove.
	2.	Insert the holder. Make sure that the angled tip is positioned above the spring in the groove.
	3.	Mount the holder using the supplied Torx screws.

	Description	
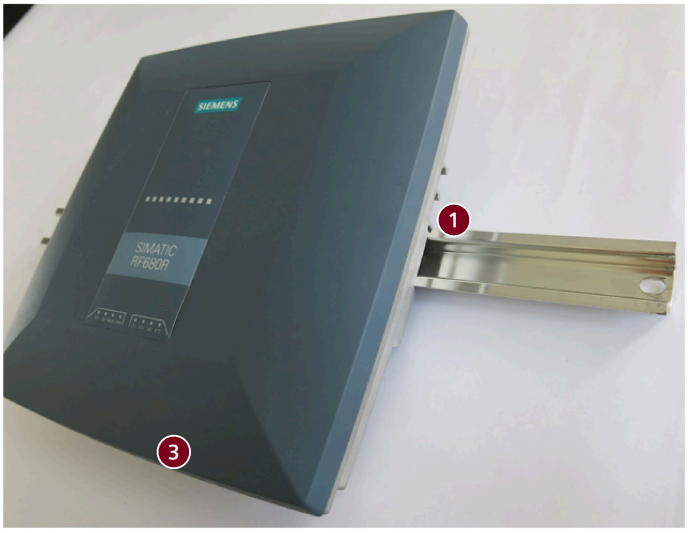	4.	Fit the lower locking mechanism of the reader onto the top edge of the DIN rail ①.
	5.	Pull down the holder mounted in step 2 ② while pressing the reader backwards at the bottom ③ at the same time.
	6.	Release the holder mounted in step 2 ②. Make sure that the holder locks into the DIN rail and the reader sits securely on the DIN rail.

SIMATIC RF690R/RF695R

The mounting of the SIMATIC RF690R and RF695R readers is very similar to the mounting of the SIMATIC RF650R, RF680R and RF685R readers, except that the RF690R/RF695R readers only have one locking mechanism and the holder for hanging in a DIN rail is already premounted.

To mount the RF690R/RF695R readers on a T35 DIN rail, use steps 4 to 6 of the previous instructions for mounting the RF650R/RF680R/RF685R readers on a DIN rail as a guide.

Installation on a mounting rail

Follow these steps to mount the SIMATIC RF650R, RF680R or RF685R readers on a mounting rail using the mounting kit:

Table 2- 7 Installation on a mounting rail

	Description	
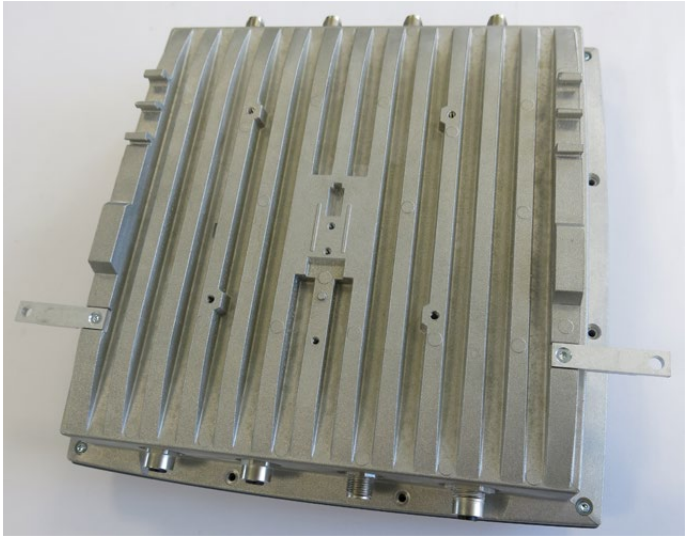	1.	Mount the two adapter pieces using the supplied Torx countersunk head screws ①.
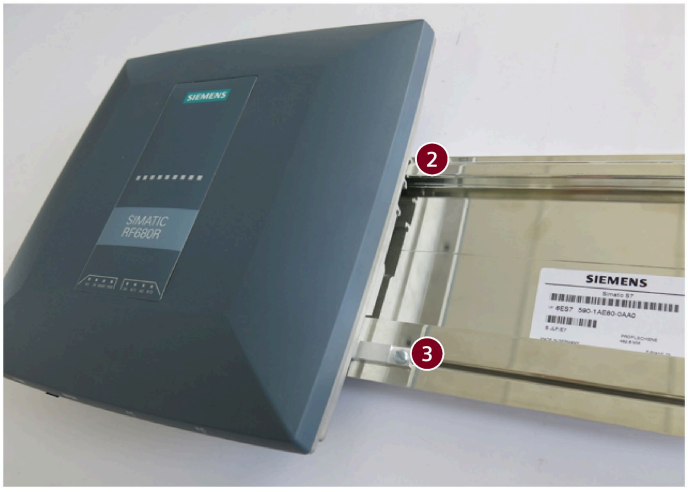	2.	Fit the upper locking mechanism of the reader into the top edge of the DIN rail ②.
	3.	Secure the reader using the supplied slotted-head screws ③.